VSF SERIES

Worm gear reducers and Worm geared motors

NMRV POWER™

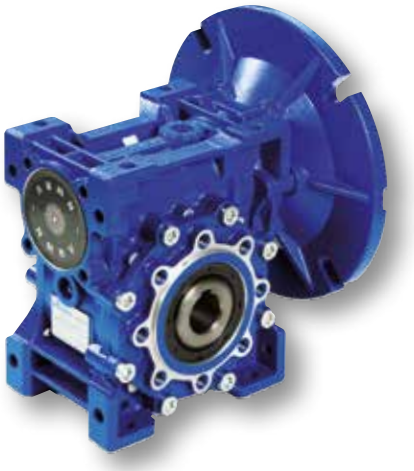

NMRV®

MOTOVARIO®
HEART OF MOTION
a TECO Group company

Contents

Symbols 1
Modularity 2
Design features 4
Design features HA31 4
Design features HW 4
Product selection guide 5
Service factor 6
Critical applications 6
Installation 7
Overhung load (OHL) 7
Moments of inertia 9
Lubrication 9
Designation 11
Versions 14
Standard input flange 16
Efficiency 26
Irreversibility 26
Gear mesh data 27
Angular backlash 28
Motor mounting with input flange - NMRV 29
Motor mounting with input flange - NMRV-P 29
Mounting positions 29
Ratings NMRV/NMRV-P 34
Ratings NRV/NRV-P 96
Dimensions 101
Electric motors 110
Accessories 112

Symbols

P	=	Power (HP)
Pr	=	Requested power (HP)
Pn	=	Nominal power (HP)
M	=	Torque (in-lb)
Mr	=	Requested torque (in-lb)
Mn	=	Nominal torque (in-lb)
n	=	Speed (RPM)
i	=	Reduction ratio
ηd	=	Dynamic efficiency
F	=	Load (lb)
m	=	Weight (lb)
s.f.	=	Service factor
ips	=	Speed (inch/second)
1	=	Input
2	=	Output
r	=	Overhung load (OHL)
a	=	Thrust load
s	=	Static
d	=	Dynamic
c	=	Calculated
max	=	Maximum
min	=	Minimum

Modularity

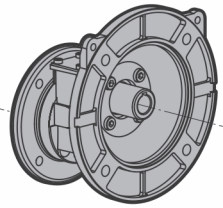

HA31 **HA31** - Pre-stage reduction unit (NMRV 040-050)

NMRV 025-050
NMRV130-150

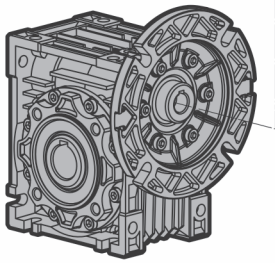

NMRV 025-150 - Worm geared motor

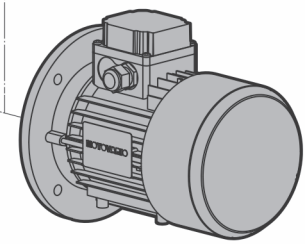

NMRV-NMRV...

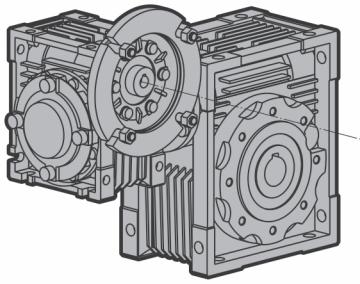

NMRV... - NMRV... - Combined worm geared motor

NRV 030-050
NRV 130-150

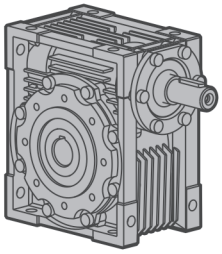

NRV 030-150 - Worm gear reducer

NRV-NMRV...

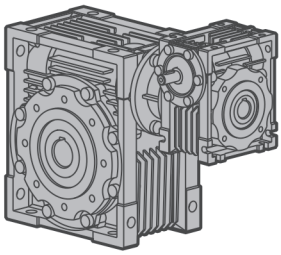

NRV... - NMRV... - Combined worm gear reducer

Modularity

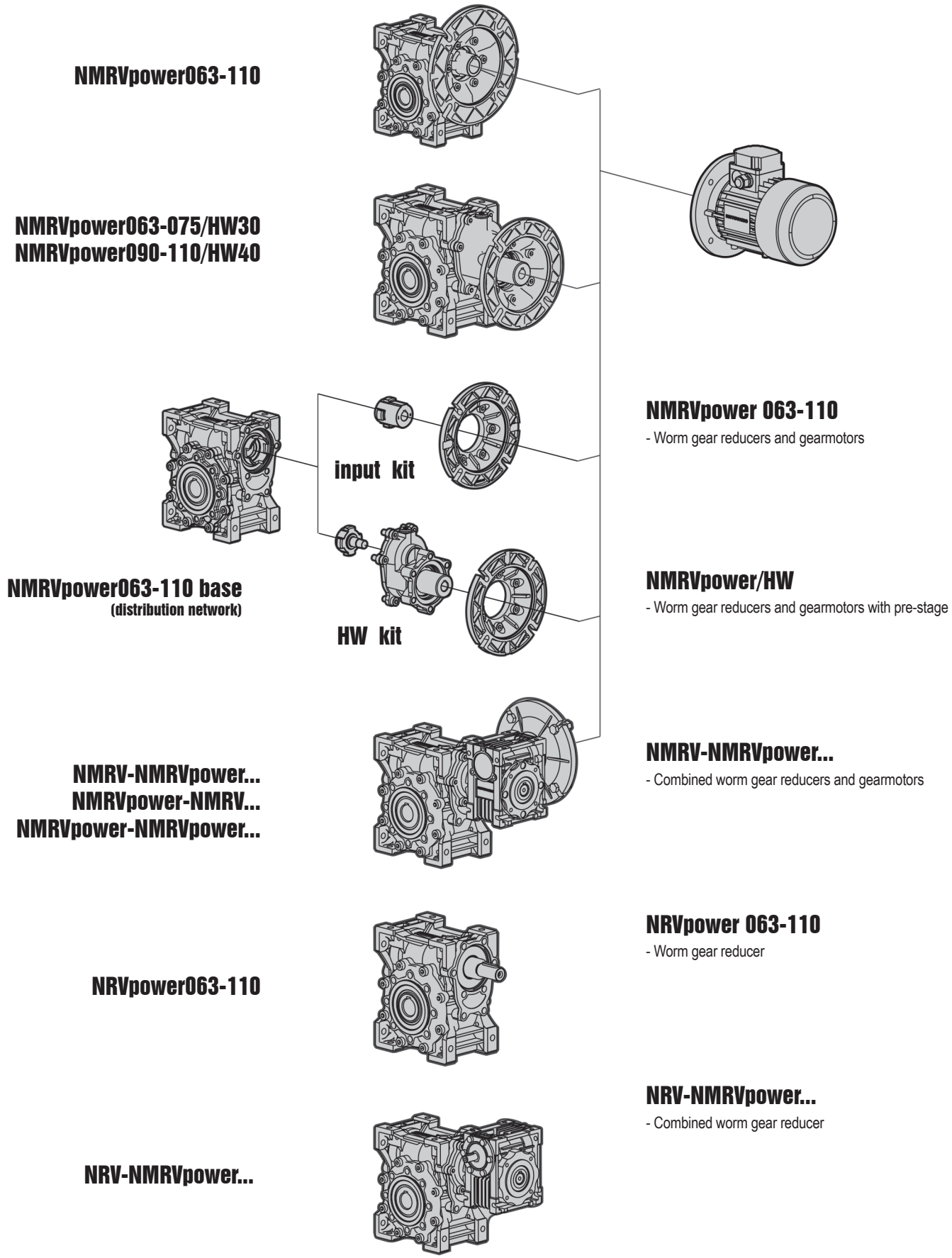
NMRVpower063-110
NMRVpower063-075/HW30
NMRVpower090-110/HW40
input kit
NMRVpower063-110 base
(distribution network)
HW kit
NMRV-NMRVpower...
NMRVpower-NMRV...
NMRVpower-NMRVpower...
NRVpower063-110
NRV-NMRVpower...
NMRVpower 063-110
- Worm gear reducers and gearmotors
NMRVpower/HW
- Worm gear reducers and gearmotors with pre-stage
NMRV-NMRVpower...
- Combined worm gear reducers and gearmotors
NRVpower 063-110
- Worm gear reducer
NRV-NMRVpower...
- Combined worm gear reducer

Design features

Motovario products are supplied with the following surface treatment features:

Die-cast aluminum alloy cases for gears
Die-cast materials undergo the following surface cleaning operations:
- De-burring by means of a mechanically operated shearing system
- Accurate shot-peening
- Washing and passivation

Grey-coloured cast-iron cases for gears
- Die-cast materials are always painted

Painting specifications:
Orange-peel blue epoxy-polyester RAL 5010. Polyester resin based heat-hardening powders,altered with epoxy resins.

Mechanical properties
- Tests carried out onto degreased Unichim white lattens (film thickness: 2.5 mils) comply with the following specifications: adherence (ISO2409), Erichsen drawing (ISO152), inverted shock (DIN53158), cone-shaped mandrel (DIN53151), hardness (ASTM D3363/74).

Heat resistance
- 24 HOURS AT 302°F.

Corrosion strength
- ASTM B 117/97 salt fog from 100 to 500 hours depending on the support's preliminary treatment.

Ratings:
Loading capacity in accordance with: ISO 14521, DIN 3996, BS 721, AGMA 6034, ISO 6336, DIN 3990, DIN 743, ISO 281

Design features HA31

HA31 is the single stage helical gear reducer available as pre-stage for the worm gear boxes NMRV040 and NMRV050 coupled with Ø140 flange.

Materials
Gears 20MnCr5 (UNI7846) hardened and tempered
with shaved profile.

Design features HW

There are two pre-stage units called HW. HW030 which can be mounted on gearboxes NMRVpower063-075 and HW040 which can be fitted with gearboxes NMRVpower090-110
The pre-stage construction is modular and therefore it can be supplied for various motor (input flange) with B5 and B14 flange.
The pre-stage is always coupled to the reducer NMRVpower.

Materials
Casing in aluminum alloy. Steel gears 20MnCr5 (UNI7846), hardened, tempered and carefully scraped.

Product selection guide

For correctly selecting a gear reducer or geared motor, several essential pieces of data are required:

A - The rotational input speed to the gear reducer (**n1**) and the rotational output speed (**n2**).
Through these two values it is possible to calculate the reduction ratio (**i**) of the gear reducer using the following formula:

$$i = \frac{n1}{n2}$$

B - The torque required by the application (**Mr2**).

The geared motor or gear reducer can be selected once this data is known.

Geared motor selection
This guide indicates a brief sequence of steps for selecting a suitable product:

1 Determine the application's actual service factor (**s.f.**). This parameter depends on the type of load of the powered machine, the number of starts per hour and the hours of operation (refer to the "Service factor" paragraph on page 6).
2 Calculate the input power **Pr1** using the required torque value **Mr2**. the speed **n2** and dynamic efficiency value.

$$Pr1 = \frac{Mr_2 \cdot n2}{\mu_d \cdot 63.025}$$

The dynamic efficiency value depends on the type of gear reducer and on the number of gear reduction stages. (To calculate the efficiency value see page 4).
3 Consult the geared motor performance tables and identify a normalised power value **Pn1** exceeding the required power **Pr1**, such that:

$$Pn1 \geq Pr1$$

4 Once the suitable normalised power has been identified, select the geared motor capable of generating the rotational speed closest to the desired n2 value and with service factor s.f. greater or equal to that required by the application.

In the geared motor selection tables the combinations include 4-pole and 6-pole motors powered at 50Hz; for different drive speeds refer to the nominal data provided for the gear reducers.

Gear reducer selection
1 Determine the application's service factor (**s.f.**) (consult to the "Service factor" paragraph on page 6).
2 Calculate the reduction ratio i from the requested output speed **n2** and from the input speed **n1**.

$$i = \frac{n1}{n2}$$

3 Calculate the torque **Mc2** for selecting the gear reducer through the torque required by the application **Mr2** and the service factor s.f.:

$$Mc2 = Mr2 \cdot (f.s.)$$

4 Consult the gear reducer performance tables and identify the gear reducer that - with a reduction ratio closest to the calculated ratio - has a nominal torque **M2** such that

$$M2 \geq Mc2$$

Checks
Once the gear reducer or geared motor has been selected, the following checks should be performed:

A - **Maximum torque**
Generally, the maximum torque (peak instantaneous load) that can be applied to the gear reducer must not exceed 200% of the nominal torque M2.

B - **Radial loads**
1. Verify that the radial loads acting on the input and/or output shafts are within with the values indicated in the catalogue. If they exceed these values, increase the size of the gear reducer or modify the external load capacity.

   During the checking phase, it is important to remember that the values indicated in the catalogue refer to loads acting on the mid-point of the shaft protrusion, therefore, if the load is applied to a different position, appropriate formulas must be used to calculate the admissible load in the desired position (refer to the "Radial loads" paragraph on page 10).

2. If accessory output shafts are present, make sure that the applied load is compatible with shaft size. If help is needed: contact MOTOVARIO TECHNICAL SERVICE.

C - If an electric motor is going to be fitted to the selected gear reducer, check for its applicability by referring to the configuration table (see paragraph "Configurations" page 11).

Service factor

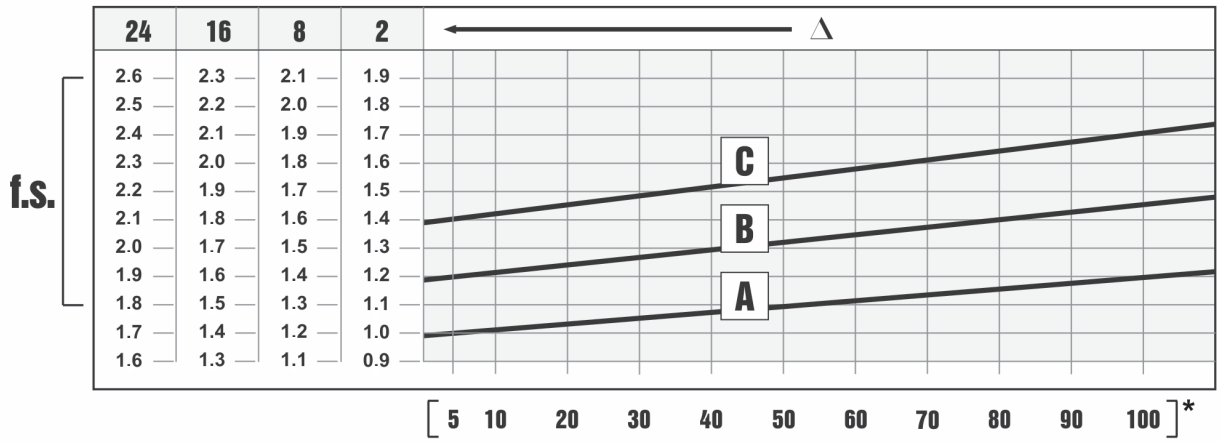

The service factor (s.f.) depends on the operating conditions the gear reducer is subjected to. The parameters that need to be taken into consideration to select the most adequate service factor correctly comprise:
- Type of load of the operated machine : A - B - C
- Length of daily operating time: hours/day (Δ)
- Start-up frequency: starts/hour (*)

LOAD: **A** - uniform fa ≤ 0.3
B - moderate shocks fa ≤ 3
C - heavy shocks fa ≤ 10

fa = Je/Jm
- Je (in-lb^2) moment of reduced external inertia at the drive-shaft
- Jm (in-lb^2) moment of inertia of motor

If fa > 10 call our Technical Service.

A - Screw feeders for light materials, fans, assembly lines, conveyor belts for light materials, small mixers, lifts, cleaning machines, fillers, control machines.

B - Winding devices, woodworking machine feeders, goods lifts, balancers, threading machines, medium mixers, conveyor belts for heavy materials, winches, sliding doors, fertilizer scrapers, packing machines, concrete mixers, crane mechanisms, milling cutters, folding machines, gear pumps.

C - Mixers for heavy materials, shears, presses, centrifuges, rotating supports, winches and lifts for heavy materials, grinding lathes, stone mills, bucket elevators, drilling machines, hammer mills, cam presses, folding machines, turntables, tumbling barrels, vibrators, shredders.

Critical applications

NMRV	025	030	040	050	130	150
V5: 1500 < n1 < 3000	-	-	-	-	B	B
n1 > 3000	B	B	B	B	A	A
V6	B	B	B	B	B	B

NMRV-P	063	075	090	110
V5: 1500 < n1 < 3000	B	B	B	B
n1 > 3000	B	B	A	A
V6	B	B	B	B

H	A31
V5 - V1: 1500 < n1 < 3000	-
n1 > 3000	B
V3 - V6	B

HW+NMRV-P	030+063	030+075	040+090	040+110
1500 < n1 < 3000	B	B	B	B
n1 > 3000	A	A	A	A
V5 - V6	B	B	B	B

A | Application not recommended **B** | Check the application and/or call our technical service

The ratings given in the catalogue correspond to mounting position B3 or similar, ie. when the first stage is not entirely immersed in oil. For other mounting positions and/or particular input speeds, refer to the tables that highlight different critical situations for each size of gear reducer.
It is also necessary to take due consideration of and carefully assess the following applications by calling our Technical Service:

- To avoid the use as multiplier.
- Use in services that could be hazardous for people if the gear reducer fails.
- Applications with especially high inertia.
- Use as a lifting winch.
- Applications with high dynamic strain on the case of the gear reducer.
- In places with T° under 23°F or over 104°F.
- Use in chemically aggressive environments.
- Use in a salty environment.
- Mounting positions not envisaged in the catalogue.
- Use in radioactive environments.
- Use in environmental pressures other than atmospheric pressure.

Avoid applications where even partial immersion of the reducer is required.
The maximum torque (*) that the reducer can support must not exceed two times the nominal torque (s.f.=1) stated in the ratings tables.
With S3 service it is possible to increase transmitted torque according to ratio, input speed and application duration, in this case please contact our Technical service.
(*) intended for momentary overloads due to starting at full load, braking, shocks or other causes, particularly those that are dynamic.

Installation

To install the gear reducer it is necessary to note the following recommendations:

- Check the correct direction of rotation of the gear reducer output shaft before fitting the unit to the machine.
- In the case of particularly lengthy periods of storage (4/6 months), if the oil seal is not immersed in the lubricant inside the unit, it is recommended to change it since the rubber could stick to the shaft or may even have lost the elasticity it needs to function properly.
- Whenever possible, protect the gear reducer against solar radiation and bad weather.
- Ensure the motor cools correctly by ensuring good passage of air from the fan side.
- In the case of ambient temperatures < 23°F or > 104°F call the Technical Service.
- The various parts (pulleys, gear wheels, couplings, shafts, etc.) must be mounted on the solid or hollow shafts using special threaded holes or other systems that anyhow ensure correct operation without risking damage to the bearings or external parts of the units.
- Lubricate the surfaces in contact to avoid seizure or oxidation.
- Painting must definitely not go over rubber parts and the holes on the breather plugs, if any.
- For units equipped with oil plugs, replace the closed plug used for shipping with the special breather plug.
- Check the correct level of the lubricant through the indicator, if there is one.
- Starting must take place gradually, without immediately applying the maximum load.
- When there are parts, objects or materials under the motor drive that can be damaged by even limited spillage of oil, special protection should be fitted.

Overhung load

The value of the admissible Overhung load (OHL) (lb) is given in the tables relating to the ratings of the gear reducer at issue. It is related to the load applied on the centre line of the shaft and in the most unfavourable conditions of angle of application and direction of rotation.

The maximum admissible thrust loads are 1/5 of the value of the given Overhung load (OHL) when they are applied in combination with the Overhung load (OHL).
The tables relating to the output shafts give the maximum admissible value. This value must never be exceeded since it relates to the strength of the case.
Particular conditions of Overhung load (OHL) higher than the limits of the catalogue may occur. In this case, call our Technical Sevice and provide details on the application: direction of the load, direction of rotation of the shaft, type of service.
In case of double extension shafts with radial load applied on both ends, the max. admissible radial loads must be defined according to the specific running conditions, in this case call our Technical Service.
Particular conditions of radial load higher than the limits of the catalogue may occur. In this case, call our Technical Sevice and provide details on the application: direction of the load, direction of rotation of the shaft, type of service.

The Overhung load (OHL) on the shaft is calculated with the following formula:

$$Fre = \frac{2 \cdot M \cdot fz}{D} \leq Fr_1 \text{ or } Fr_2$$

Fre (lb) Resulting Overhung load (OHL)
M (in-lb) Torque on the shaft
D (in) Diameter of the transmission member mounted on the shaft
Fr (lb) Value of the maximum admitted Overhung load (OHL)
Fr1-Fr2 (see relative tables)
fz = 1.1 gear pinion
1.4 chain wheel
1.7 v-pulley
2.5 flat pulley

When the resulting Overhung load (OHL) is not applied on the centre line of the shaft, it is necessary to adjust the admissible Overhung load (OHL) Fr1-2 with the following formula:

$$Frx = \frac{Fr_{1-2} \cdot a}{(b + x)}$$

a , **b** = values given in the tables on page 8
x = distance from the point of application of the load to the shaft shoulder

Input Overhung loads (OHL)

When the Overhung load (OHL) is not on the centre line of the shaft, it is necessary to adjust the admissible Overhung load (OHL) Fr1 with the following formula:

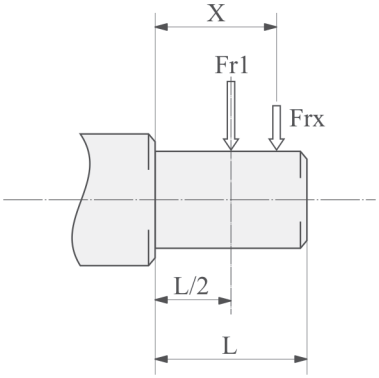

$$Frx = \frac{Fr_1 \cdot a}{(b + x)}$$

(**Fr_1) Max. admissible value of the reducer; verify max. admissible value on ratings tables.

NRV-P/NRV	030	040	050	063	075	090	110	130	150
a	3.39	4.17	5.08	6.26	7.56	8.94	10.47	12.36	13.78
b	2.99	3.72	4.49	5.47	6.57	7.95	9.29	10.79	12.20
Fr1 max(**)	47	79	110	157	220	286	382	472	629

IHW040	090	110
a	2.80	
b	2.01	
Fr1 max(**)	90	112

Output Overhung loads (OHL)

When the Overhung load (OHL) is not on the centre line of the shaft, it is necessary to adjust the admissible Overhung load (OHL) Fr2 with the following formula:

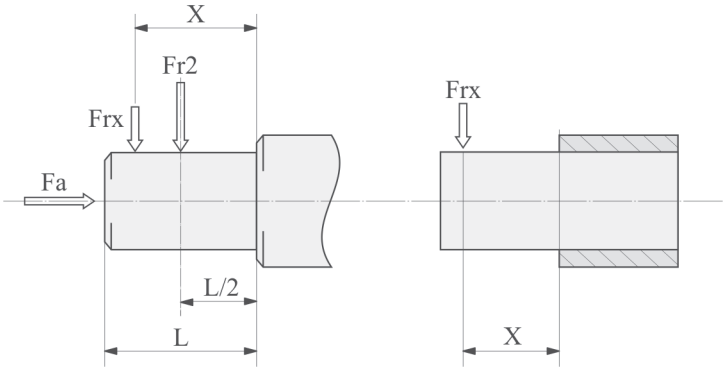

$$Frx = \frac{Fr_2 \cdot a}{(b + x)}$$

(**Fr_2) Max. admissible value of the reducer; verify max. admissible value on ratings tables.

NMRV-P/NMRV	025	030	040	050	063	075	090	110	130	150
a	1.97	2.56	3.31	3.98	4.72	5.16	6.38	6.93	7.40	8.46
b	1.50	1.97	2.52	2.99	3.74	3.98	4.80	5.35	5.83	6.85
Fr2 max(**)	303	411	785	1088	1410	1659	1839	2698	3035	4047

Moments of inertia

Following values are indicative only and refer to gear reducers fitted with input flange. These values refer to maximum moment of inertia.

NMRV	J *1E-4 [kg*m²]	lb-in²
025	0.03	107
030	0.1	347
040	0.3	1015
050	0.8	2879
130	22.5	76877
150	52.9	180689

NMRV-P	J *1E-4 [kg*m²]	lb-in²
063	2.2	7603
075	4.4	15086
090	8.2	27864
110	19.9	68042

H	J *1E-4 [kg*m²]	lb-in²
A31	1.0	3313

Lubrication

In cases of ambient temperatures not envisaged in the table, call our Technical Service. In the case of temperatures under -22°F or over 140°F it is necessary to use oil seals with special properties. For operating ranges with temperatures under 32°F it is necessary to consider the following:

1 The motors need to be suitable for operation at the envisaged ambient temperature.
2 The power of the electric motor needs to be adequate for exceeding the higher starting torques required.
3 In case of cast-iron gear reducers, pay attention to impact loads since cast iron may have problems of fragility at temperatures under 5°F.
4 During the early stages of service, problems of lubrication may arise due to the high level of viscosity taken on by the oil and so it is wise to have a few minutes of rotation under no load.

The oil needs to be changed after approximately 10,000 hours. This period depends on the type of service and the environment where the gear reducer works. For units supplied without oil plugs, lubrication is permanent and so they need no servicing.

NMRV	025	030	040	050	130	150
B3	0.02	0.04	0.08	0.15	4.5	7
B8					3.3	5.1
B6-B7					3.5	5.4
V5					4.5	7
V6					3.3	5.1

H	A31
B3	0.07

NMRV-P	063	075	090	110
B3	0.33	0.55	1	1.6
B8				
B6-B7				
V5				
V6				

HW	030		040	
	063	075	090	110
B3	0.06	0.09	0.11	0.12

- Quantity of oil in litres ~

Lubricant quantities are only indicative. For correct filling always refer to the sight glass or the dipstick, when this is supplied. Any oil level differences can be caused by constructive tolerances but also on the mounting position or the assembly scheme of the customer. Therefore it is very important for the customer to check oil level and if necessary to add the necessary quantity.
The gear reducers size 025 - 030 - 040 - 050 - 063 - 075 - 090 - 110 are supplied complete with lubricant for life, synthetic oil, ENI TELIUM VSF. They can be mounted in any position envisaged in the catalogue, except for NMRV 090 - 110 and NRV 075-090-110 for which you must to specify the mounting position.

For sizes 130 and 150 it is necessary to specify the position, otherwise the gear reducers are supplied with the quantity of oil relating to pos. B3.
Only reduction units 130 and 150 are fitted with breather, level and oil drainage plugs. It is necessary, after installation, to replace the closed plug used for transportation with the breather plug supplied with the unit.
The pre-stage helical modules are supplied complete with life-long lubricant, synthetic oil, ENI TELIUM VSF. Lubrication is separated from that of the worm gear reducers.

Lubrication

	*T°F ISO/SAE	ENI	SHELL	KLUBER	MOBIL	CASTROL	BP	
HA31	(+23) ÷ (+104) ISO VG220	BLASIA 220	OMALA OIL220	KLUBEROIL GEM 1-220N	MOBILGEAR 600 XP220	ALPHA MAX 220	ENERGOL GR-XP220	Mineral oil
NMRV 025 ÷ 150 NMRV-P 063 ÷ 110 HW 030 ÷ 040	(-13) ÷ (+122) ISO VG320	TELIUM VSF320	TIVELA OIL S320	KLUBERSYNTH GH 6-320	SHC 632	ALPHASYN PG320	ENERGOL SG-XP320	Synthetic oil

- standard supply - Specifications of lubricants recommended by Motovario S.p.A. * Working ambient temperature

Special lubricants			
		*T°F ISO VG...	Synthetic oil
Oils for low temperature	ENI	(-13) ÷ (+68)	BLASIA 150 S (ISO VG150)
	KLUBER	(-31) ÷ (+50)	KLUBERSYNTH GH 6-80 (ISO VG68)
	MOBIL	(-40) ÷ (+41)	SCH 626 (ISO VG68)
	KLUBER	(-40) ÷ (+41)	KLUBERSYNTH GH 6-32 (ISO VG32)
Oils for low temperature - Food sector	KLUBER	(-22) ÷ (+50)	KLUBERSYNTH UH1-6 100 (ISO VG100)
Oils for high temperature	KLUBER	(-14) ÷ (+122)	KLUBERSYNTH GH 6-460 (ISO VG460)
	KLUBER	(-14) ÷ (+158)	KLUBERSYNTH GH 6-680 (ISO VG680)
Oils for high temperature - Food sector	KLUBER	(-14) ÷ (+122)	KLUBERSYNTH UH1-6 460 (ISO VG460)
Food sector	KLUBER	(+5) ÷ (+104)	KLUBERSYNTH UH1-6 320 (ISO VG320)

- If 'special' lubricant is required please contact for Technical Assistance

Designation

NMRV	050	HA31	FA	7.5	56C	VS	125	25	BS	B3	...
NMRV	025	HA31	FA	5	IEC				AS	B3	
NRV	030		FB	7.5	ECE				BS	B8	
	040		FC	10	NEMA				VS	B6	
	050		FD	15					PS	B7	
	063		FE	20						V5	
	075			25						V6	
	090			30							
	105			40							
	110			50							
	130			60							
	150			80							
				100							
				22.08							
				...							
				315							

Gearbox type (*)

Size

Pre-stage helical module

Output flange

Reduction ratio

Input dimensions

Double input shaft

Ø Output flange

Ø Output shaft

Execution

Mounting position

Accessories (**)

Fitted for motor coupling — **IEC** (160x14)

Fitted for motor coupling — **NEMA** (56C)

Input shaft diameter — **E (ECE)** (0.5)

(*) NMRV: Worm geared motor / NRV: Worm reduction unit
(**) Torque arm - Low speed shafts - Cover

Designation

NMRV-P	063	HW030	FA	22.08	56C	VS	125	25	B3	...
NMRV-P	063	HW030	FA	29.00	IEC				B3	
NRV-P	075	HW040	FB	38.67	ECE				B8	
	090	IHW040	FC	44.17	NEMA				B6	
	110		FD	47.50					B7	
			FE	58.00					V5	
				71.25					V6	
				...						
				1083.33						

Gearbox type (*)

Size

Pre-stage helical module

Output flange

Reduction ratio

Input dimensions

Fitted for motor coupling — **IEC** (160x14)

Fitted for motor coupling — **NEMA** (56C)

Input shaft diameter — **E (ECE)** (0.5)

Double input shaft

Ø Output flange

Ø Output shaft

Mounting position

Accessories (**)

(*) NMRV-P: Worm geared motor / NRV-P: Worm reduction unit
(**) Torque arm - Low speed shafts - Cover

Designation

NMRV+NMRV-P	050+110	FA	900	56C	40	BS1	B3
NMRV+NMRV	025+030	FA	100	IEC		AS1	
NRV+NMRV	025+040	FB	150	ECE		AS2	
NMRV+NMRV-P	030+040	FC	200	NEMA		BS1	
NMRV-P+NMRV	030+050	FD	250			BS2	
NMRV-P+NMRV-P	030+063	FE	300			VS1	
NRV+NMRV-P	040+050		400			VS2	
NRV-P+NMRV	040+063		500			PS1	
	040+075		600			PS2	
	040+090		750				
	050+090		900				
	050+110		1200				
	063+110		1500				
	063+130		1800				
	063+150		2400				
			3000				
			4000				
			5000				

Mounting position

Gearbox type

Double worm gearbox assembly position

Combined geared motor

Combined gear reducer

Ø Output shaft

Input dimensions

Size

IEC (160x14) — Fitted for motor coupling

NEMA (56C) — Fitted for motor coupling

E (ECE) (0.5) — Input shaft diameter

Output flange

Reduction ratio

Versions

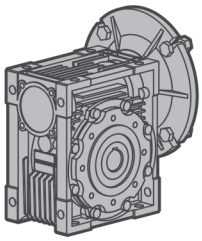

NMRV 025-050
NMRV 130-150

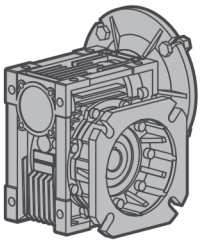

NMRV 025-050 F
NMRV 130-150 F

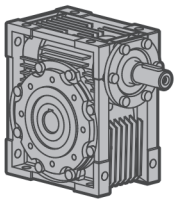

NRV 030-050
NRV 130-150

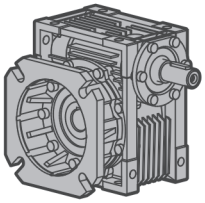

NRV 030-050 F
NRV 130-150 F

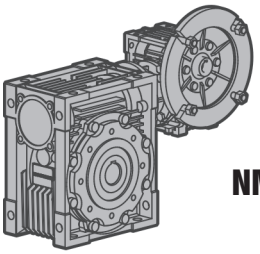

NMRV-NMRV...

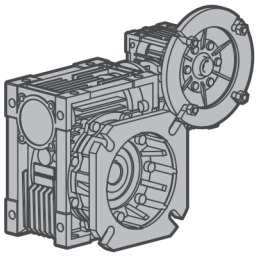

NMRV-NMRV... F

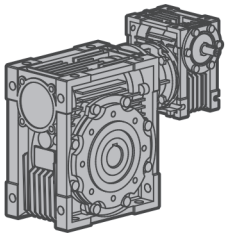

NRV-NMRV...

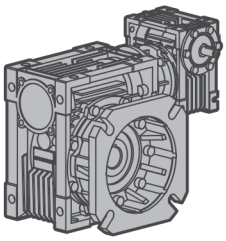

NRV-NMRV... F

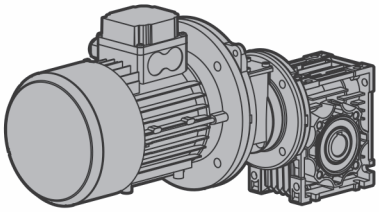

HA31+NMRV...

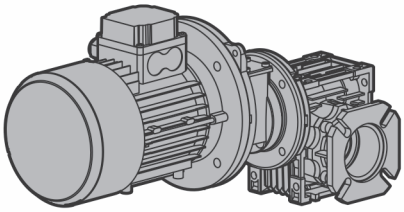

HA31+NMRV... F

Versions

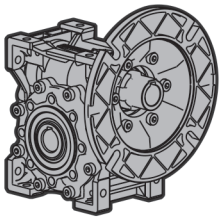

NMRVpower 063-110

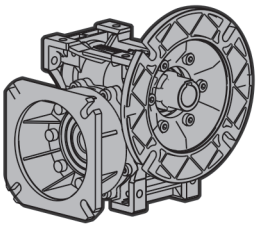

NMRVpower 063-110 F

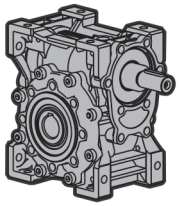

NRVpower 063-110

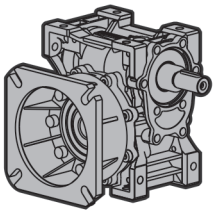

NRVpower 063-110 F

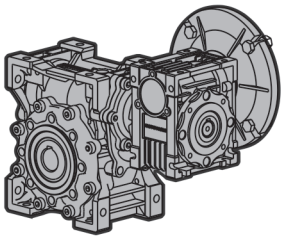

NMRV-NMRVpower...
NMRVpower-NMRV...
NMRVpower-NMRVpower...

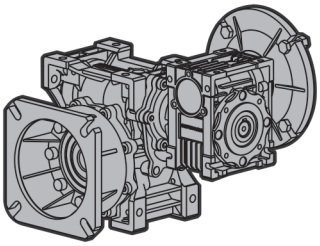

NMRV-NMRVpower... F
NMRVpower-NMRV... F
NMRVpower-NMRVpower... F

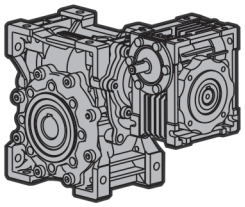

NRV-NMRVpower...
NRVpower-NMRV...
NRVpower-NMRVpower...

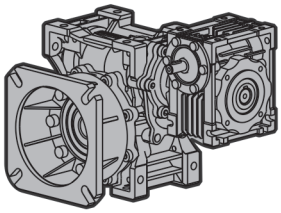

NRV-NMRVpower... F
NRVpower-NMRV... F
NRVpower-NMRVpower...F

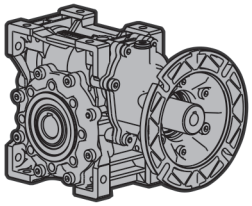

NMRVpower/HW...

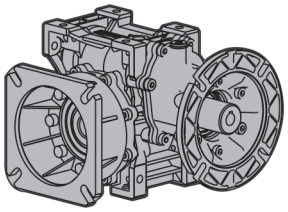

NMRVpower/HW... F

Standard input flange - IEC

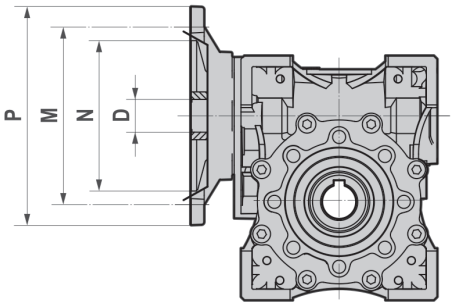

(*) Low profile key supplied by Motovario.
(**) Motor-ratio combination not feasible.
(+) Motor-ratio combination not to be used, out of warranty terms.

NMRV	IEC	N	M	P	D	Available Ratios											
						5	7.5	10	15	20	25	30	40	50	60	80	100
025	56B14	50	65	80	9	•	•	•	•	•	-	•	•	•	•	-	-
030	63B5	95	115	140	11	•	•	•	•	•	•	•	•	•	-	-	-
	63B14	60	75	90	11												
	56B5	80	100	120	9	•	•	•	•	•	•	•	•	•	•	•	-
	56B14	50	65	80	9												
040	71B5	110	130	160	14	•	•	•	•	•	•	•	•	-	-	-	-
	71B14	70	85	105	14												
	63B5	95	115	140	11	•	•	•	•	•	•	•	•	•	•	•	•
	63B14	60	75	90	11												
	56B5	80	100	120	9	-	-	-	-	-	-	-	-	•	•	•	•
050	80B5	130	165	200	19	•	•	•	•	•	•	•	-	-	-	-	-
	80B14	80	100	120	19												
	71B5	110	130	160	14	•	•	•	•	•	•	•	•	•	•	•	-
	71B14	70	85	105	14												
	63B5	95	115	140	11	-	-	-	-	-	-	-	•	•	•	•	•
063	90B5	130	165	200	24	-	•	•	•	•	•	•	•	-	-	-	-
	90B14	95	115	140	24												
	80B5	130	165	200	19	-	•	•	•	•	•	•	•	•	•	•	-
	80B14	80	100	120	19												
	71B5	110	130	160	14	-	•	•	•	•	•	•	•	•	•	•	•
	71B14	70	85	105	14												
075	100/112B5	180	215	250	28	-	•	•	•	•	•	•	-	-	-	-	-
	100/112B14	110	130	160	28												
	90B5	130	165	200	24	-	•	•	•	•	•	•	•	•	•	-	-
	90B14	95	115	140	24												
	80B5	130	165	200	19	-	•	•	•	•	•	•	•	•	•	•	•
	80B14	80	100	120	19												
	71B5	110	130	160	14	-	-	-	-	-	-	-	-	•	•	•	•
090	100/112B5	180	215	250	28	-	•	•	•	•	•	•	-	-	-	-	-
	100/112B14	110	130	160	28												
	90B5	130	165	200	24	-	•	•	•	•	•	•	•	•	•	-	-
	90B14	95	115	140	24												
	80B5	130	165	200	19	-	•	•	•	•	•	•	•	•	•	•	•
	80B14	80	100	120	19												
110	132B5	230	265	300	38	-	•	•	•	•	•	•	•	-	-	-	-
	100/112B5	180	215	250	28	-	•	•	•	•	•	•	•	•	•	-	-
	90B5	130	165	200	24	-	•	•	•	•	•	•	•	•	•	•	•
	90B14	95	115	140	24												
	80B5	130	165	200	19	-	•	•	•	•	•	•	•	•	•	•	•
	80B14	80	100	120	19												
130	132B5	230	265	300	38*	-	•	•	•	•	•	•	•	-	-	-	-
	100/112B5	180	215	250	28	-	-	-	-	-	•	•	•	•	•	•	•
	90B5	130	165	200	24	-	-	-	-	-	-	-	-	-	-	•	•
150	160B5	250	300	350	42	-	•	•	•	•	•	-	-	-	-	-	-
	132B5	230	265	300	38	-	-	-	-	•	•	•	•	•	•	-	-
	100/112B5	180	215	250	28	-	-	-	-	-	-	-	-	•	•	•	•

Standard input flange - NEMA

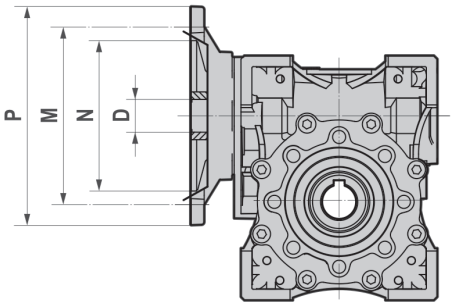

NMRV	NEMA	N	M	P	D	Available Ratios											
						5	7.5	10	15	20	25	30	40	50	60	80	100
030	48C	3.00	3.75	5.625	0.500	●	●	●	●	●	●	●	●	●	●	●	-
040	56C	4.50	5.88	6.500	0.625	●	●	●	●	●	●	●	●	●	●	●	●
050	56C	4.50	5.88	6.500	0.875	●	●	●	●	●	●	●	●	●	●	●	●
063	56C	4.50	5.88	6.500	0.625	-	●	●	●	●	●	●	●	●	●	●	●
	140TC	4.50	5.88	6.500	0.875	-	●	●	●	●	●	●	●	●	-	-	-
075	56C	4.50	5.88	6.500	0.625	-	●	●	●	●	●	●	●	●	●	●	●
	140TC	4.50	5.88	6.500	0.875	-	●	●	●	●	●	●	●	●	●	-	-
	180TC	8.50	7.25	9.000	1.125	-	●	●	●	●	-	-	-	-	-	-	-
090	56C	4.50	5.88	6.500	0.625	-	●	●	●	●	●	●	•	•	•	•	•
	140TC	4.50	5.88	6.500	0.875	-	●	●	●	●	●	●	•	•	•	•	•
	180TC	8.50	7.25	9.000	1.125	-	●	●	●	●	●	●	•	-	-	-	-
110	140TC	4.50	5.88	6.500	0.875	-	●	●	●	●	●	●	●	●	●	●	●
	180TC	8.50	7.25	9.000	1.125	-	●	●	●	●	●	●	●	●	●	-	-
130	140TC	4.50	5.88	6.500	0.875	-	-	-	-	-	-	-	-	-	-	•	•
	180TC	8.50	7.25	9.000	1.125	-	-	-	-	-	-	●	●	●	•	•	-
	210TC	8.50	7.25	9.000	1.375	-	●	●	●	●	●	●	●	-	-	-	-
150	180TC	8.50	7.25	9.000	1.125	-	-	-	-	-	-	●	●	●	●	●	●
	210TC	8.50	7.25	9.000	1.375	-	-	-	●	●	●	●	●	-	-	-	-
	250TC	8.50	7.25	9.000	1.625	-	●	●	●	●	-	-	-	-	-	-	-

Non-standard input flange - IEC

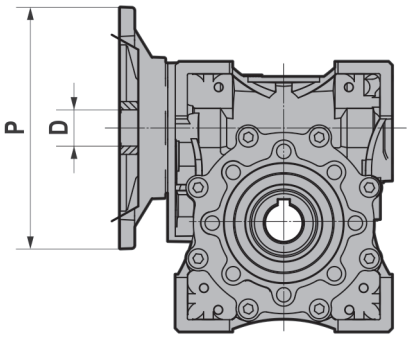

The table below report possible configurations strictly based on geometric criteria. To determine the compatibility of a motor-gear unit assembly in terms of mechanical factors, double check the selected configuration against the rating charts for NRV/NRV-P ratings.

(*) Low profile key supplied by Motovario.

(**) For NMRV-P 110 flange Ø300 only possible solution bush Ø38.

(+) Motor-ratio combination not to be used, out of warranty terms.

NMRV NMRV-P	P	D											
		5	7.5	10	15	20	25	30	40	50	60	80	100
030	140												
	120	11 9	11 9	11 9	11 9	11 9	11 9	11 9	11 9	11 9	9	9	
	90												
	80												
040	160												
	140												
	120	14 11	14 11	14 11	14 11	14 11	14 11	14 11	14 11	11 9	11 9	11 9	11 9
	105												
	90												
050	200												
	160												
	140	19 14	19 14	19 14	19 14	19 14	19 14	19 14	14 11	14 11	14 11	14 11	11
	120												
	105												
063	200												
	160												
	140		24 19 14	24 19 14	24 19 14	24 19 14	24 19 14	24 19 14	24 19 14	19 14	19 14	19 14	14
	120												
	105												
075	250												
	200												
	160		28 24 19 14	28 24 19 14	28 24 19 14	28 24 19 14	28 24 19 14	28 24 19 14	24 19 14	24 19 14	24 19 14	19 14	19 14
	140												
	120												
	105												
090	250												
	200												
	160		28 24 19	28 24 19	28 24 19	28 24 19	28 24 19	28 24 19	28 24 19	28 24 19	24 19	24 19	19
	140												
	120												
110	300		38**	38**	38**	38**	38**	38**	38**	+	+	+	+
	250												
	200												
	160		28 14 19	28 14 19	28 14 19	28 14 19	28 14 19	28 14 19	28 14 19	28 14 19	28 14 19	24 19	24 19
	140												
	120												
130	300												
	250		38*	38*	38*	38*	38* 28	38* 28	38* 28	28	28	28 24	28 24
	200												
150	350												
	300		42	42	42	42 38	42 38	38	38	38 28	38 28	28	28
	250												

- the above values are expressed in millimeters

HA31+NMRV - Predisposition

HA31 i_1	NMRV 040 i_2	$i_1 \times i_2$	63	71	80
2.94	7.5	**22.08**	B5	B5	B5
4.75	5	**23.75**	B5	B5	B5
5.10	5	**25.50**	B5	B5	
2.94	10	**29.44**	B5	B5	
6.30	5	**31.50**	B5	B5	
4.75	7.5	**35.63**	B5	B5	
5.45	7.5	**40.91**	B5	B5	
2.94	15	**44.17**	B5	B5	
4.75	10	**47.50**	B5	B5	
5.45	10	**54.55**	B5	B5	
2.94	20	**58.89**	B5	B5	
6.30	10	**63.00**	B5	B5	
4.75	15	**71.25**	B5	B5	
7.88	10	**78.75**	B5		
2.94	30	**88.33**	B5		
6.30	15	**94.50**	B5		
5.10	20	**102.00**	B5		
5.45	20	**109.09**	B5		
7.88	15	**118.13**	B5		
5.10	25	**127.50**	B5		
4.75	30	**142.50**	B5		
3.87	40	**154.67**	B5		
5.45	30	**163.64**	B5		
6.30	30	**189.00**	B5		
5.10	40	**204.00**	B5		

HA31 i_1	NMRV 050 i_2	$i_1 \times i_2$	63	71	80
2.94	7.5	**22.08**		B5	B5
4.75	5	**23.75**	B5	B5	B5
5.10	5	**25.50**	B5	B5	
2.94	10	**29.44**	B5	B5	B5
6.30	5	**31.50**	B5	B5	
4.75	7.5	**35.63**	B5	B5	B5
5.45	7.5	**40.91**	B5	B5	
2.94	15	**44.17**	B5	B5	B5
4.75	10	**47.50**	B5	B5	B5
5.45	10	**54.55**	B5	B5	
2.94	20	**58.89**	B5	B5	
6.30	10	**63.00**	B5	B5	
4.75	15	**71.25**	B5	B5	
7.88	10	**78.75**	B5	B5	
2.94	30	**88.33**	B5	B5	
6.30	15	**94.50**	B5	B5	
5.10	20	**102.00**	B5	B5	
5.45	20	**109.09**	B5	B5	
7.88	15	**118.13**	B5	B5	
5.10	25	**127.50**	B5	B5	
4.75	30	**142.50**	B5	B5	
3.87	40	**154.67**	B5	B5	
5.45	30	**163.64**	B5	B5	
6.30	30	**189.00**	B5		
5.10	40	**204.00**	B5		
7.88	30	**236.25**	B5		
6.30	40	**252.00**	B5		
5.45	50	**272.73**	B5		
4.75	60	**285.00**	B5		
6.30	50	**315.00**	B5		

NMRVpower/HW - Standard input flange

NMRVpower 063 / HW030				
i	56	63	71	80
22.08			B5-B14	B5-B14
29.00			B5-B14	B5-B14
38.67			B5-B14	B5-B14
44.17			B5-B14	B5-B14
47.50		B5	B5-B14	B5-B14
58.00		B5	B5-B14	B5-B14
71.25		B5	B5-B14	B5-B14
77.33		B5	B5-B14	B5-B14
81.82		B5	B5-B14	B5-B14
88.33		B5	B5-B14	B5-B14
95.00		B5	B5-B14	B5-B14
109.09		B5	B5-B14	B5-B14
118.13		B5	B5-B14	B5-B14
136.36		B5	B5-B14	B5-B14
142.50		B5	B5-B14	B5-B14
157.50		B5	B5-B14	B5-B14
163.64		B5	B5-B14	B5-B14
176.67	B5	B5	B5-B14	
196.88	B5	B5	B5-B14	
218.18	B5	B5	B5-B14	
236.25	B5	B5	B5-B14	
272.73	B5	B5	B5-B14	
315.00	B5	B5	B5-B14	
393.75	B5	B5	B5-B14	
433.33	B5	B5		
472.50	B5	B5		
541.67	B5	B5		
650.00	B5	B5		
787.50	B5			
866.67	B5			
1083.33	B5			

NMRVpower 075 / HW030				
i	56	63	71	80
22.08				B5-B14
29.00			B5-B14	B5-B14
38.67			B5-B14	B5-B14
44.17			B5-B14	B5-B14
47.50			B5-B14	B5-B14
58.00			B5-B14	B5-B14
71.25			B5-B14	B5-B14
77.33			B5-B14	B5-B14
81.82		B5	B5-B14	B5-B14
88.33		B5	B5-B14	B5-B14
95.00		B5	B5-B14	B5-B14
109.09		B5	B5-B14	B5-B14
116.00		B5	B5-B14	B5-B14
136.36		B5	B5-B14	B5-B14
142.50		B5	B5-B14	B5-B14
154.67		B5	B5-B14	B5-B14
163.64		B5	B5-B14	B5-B14
176.67		B5	B5-B14	B5-B14
196.88		B5	B5-B14	B5-B14
218.18		B5	B5-B14	B5-B14
236.25		B5	B5-B14	B5-B14
272.73		B5	B5-B14	B5-B14
315.00		B5	B5-B14	
393.75	B5	B5	B5-B14	
472.50	B5	B5	B5-B14	
541.67	B5	B5		
650.00	B5	B5		
787.50	B5	B5		
866.67	B5	B5		
1083.33	B5			

NMRVpower/HW - Standard input flange

NMRVpower090 / HW040				
i	63	71	80	90
23.29			B5-B14	B5-B14
31.05			B5-B14	B5-B14
42.00			B5-B14	B5-B14
46.58			B5-B14	B5-B14
63.00		B5-B14	B5-B14	B5-B14
77.63		B5-B14	B5-B14	B5-B14
84.00		B5-B14	B5-B14	B5-B14
93.16		B5-B14	B5-B14	B5-B14
110.00		B5-B14	B5-B14	B5-B14
126.00		B5-B14	B5-B14	B5-B14
137.50		B5-B14	B5-B14	B5-B14
155.26	B5	B5-B14	B5-B14	B5-B14
165.00		B5-B14	B5-B14	B5-B14
186.32	B5	B5-B14	B5-B14	
220.00	B5	B5-B14	B5-B14	B5-B14
252.00	B5	B5-B14	B5-B14	
275.00	B5	B5-B14	B5-B14	
304.55	B5	B5-B14	B5-B14	
330.00	B5	B5-B14	B5-B14	
383.33	B5	B5-B14	B5-B14	
437.50	B5	B5-B14		
460.00	B5	B5-B14		
525.00	B5	B5-B14		
613.33	B5	B5-B14		
700.00	B5	B5-B14		
766.67	B5			
875.00	B5			

NMRVpower110 / HW040				
i	63	71	80	90
23.29			B5-B14	B5-B14
31.05			B5-B14	B5-B14
42.00			B5-B14	B5-B14
46.58			B5-B14	B5-B14
62.11			B5-B14	B5-B14
77.63			B5-B14	B5-B14
84.00			B5-B14	B5-B14
93.16			B5-B14	B5-B14
105.00			B5-B14	B5-B14
126.00			B5-B14	B5-B14
137.50		B5-B14	B5-B14	B5-B14
155.26		B5-B14	B5-B14	B5-B14
168.00		B5-B14	B5-B14	B5-B14
186.32		B5-B14	B5-B14	B5-B14
220.00		B5-B14	B5-B14	B5-B14
252.00		B5-B14	B5-B14	B5-B14
275.00		B5-B14	B5-B14	B5-B14
304.55	B5	B5-B14	B5-B14	B5-B14
330.00	B5	B5-B14	B5-B14	
383.33	B5	B5-B14	B5-B14	
440.00	B5	B5-B14	B5-B14	
460.00	B5	B5-B14	B5-B14	
525.00	B5	B5-B14		
613.33	B5	B5-B14	B5-B14	
700.00	B5	B5-B14		
766.67	B5	B5-B14		
875.00	B5	B5-B14		

NMRVpower/HW - Standard input flange - NEMA

HW030+NRV-P063			
Ratio	56C	140TC	180TC
22.08	•	•	
29.00	•	•	
38.67	•	•	
44.17	•	•	
47.50	•	•	
58.00	•	•	
71.25	•	•	
77.33	•		
81.82	•		
88.33	•		
95.00	•		
109.09	•		
118.13	•		
136.36	•		
142.50	•		
157.50	•		
163.64	•		
176.67	•		
196.88	•		
218.18	•		
236.25	•		
272.73	•		
315.00	•		
393.75	•		
433.33	•		
472.50	•		
541.67	•		
650.00	•		
787.50			
866.67			
1083.33			

HW030+NRV-P075			
Ratio	56C	140TC	180TC
22.08	•	•	
29.00	•	•	
38.67	•	•	
44.17	•	•	
47.50	•	•	
58.00	•	•	
71.25	•	•	
77.33	•	•	
81.82	•	•	
88.33	•	•	
95.00	•	•	
109.09	•	•	
116.00	•	•	
136.36	•		
142.50	•	•	
154.67	•		
163.64	•		
176.67	•		
196.88	•		
218.18	•		
236.25	•		
272.73	•		
315.00	•		
393.75	•		
472.50	•		
541.67	•		
650.00	•		
787.50	•		
866.67	•		
1083.33			

NMRVpower/HW - Standard input flange - NEMA

HW040+NRV-P090			
Ratio	56C	140TC	180TC
23.29	•	•	•
31.05	•	•	•
42.00	•	•	•
46.58	•	•	•
63.00	•	•	
77.63	•	•	
84.00	•	•	
93.16	•	•	
110.00	•	•	
126.00	•	•	
137.50	•	•	
155.26	•	•	
165.00	•	•	
186.32	•		
220.00	•	•	
252.00	•		
275.00	•		
304.55	•		
330.00	•		
383.33	•		
437.50	•		
460.00	•		
525.00	•		
613.33	•		
700.00	•		
766.67	•		
875.00	•		

HW040+NRV-P110			
Ratio	56C	140TC	180TC
23.29	•	•	•
31.05	•	•	•
42.00	•	•	•
46.58	•	•	•
62.11	•	•	•
77.63	•	•	•
84.00	•	•	•
93.16	•	•	•
105.00	•	•	•
126.00	•	•	•
137.50	•	•	
155.26	•	•	
168.00	•	•	
186.32	•	•	
220.00	•	•	
252.00	•	•	
275.00	•	•	
304.55	•	•	
330.00	•	•	
383.33	•		
440.00	•		
460.00	•		
525.00	•		
613.33	•		
700.00	•		
766.67	•		
875.00	•		

NMRVpower/HW - Standard input flange

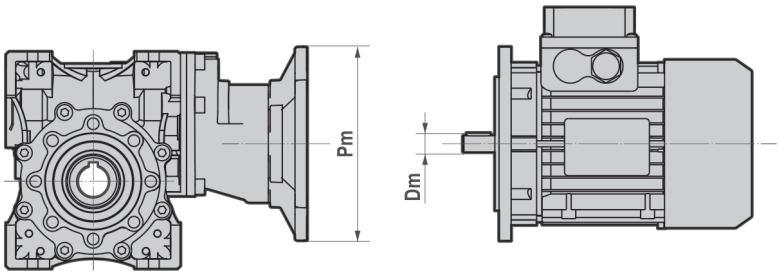

IEC B5		
	Pm	Dm
056	120mm	9mm
063	140mm	11mm
071	160mm	14mm
080	200mm	19mm
090	200mm	24mm

IEC B14		
	Pm	Dm
071	105mm	14mm
080	120mm	19mm
090	140mm	24mm

NEMA		
	Pm	Dm
56C	6.500	0.625
140TC	6.500	0.875
180TC	9.000	1.125

NMRV/NMRV - NRV/NMRV - NMRV/NMRVpower - NRV/NMRVpower - NMRVpower/NMRV NRVpower/NMRV - NMRVpower-NMRVpower - NRVpower-NMRVpower Ratios

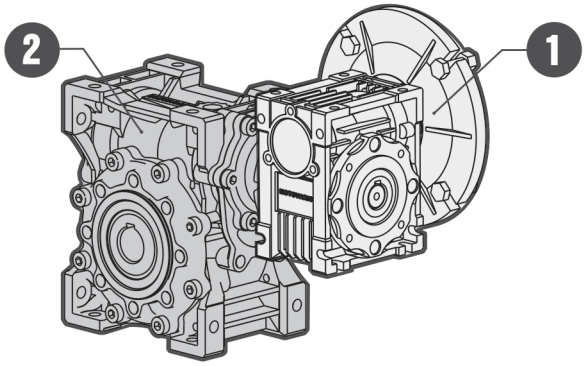

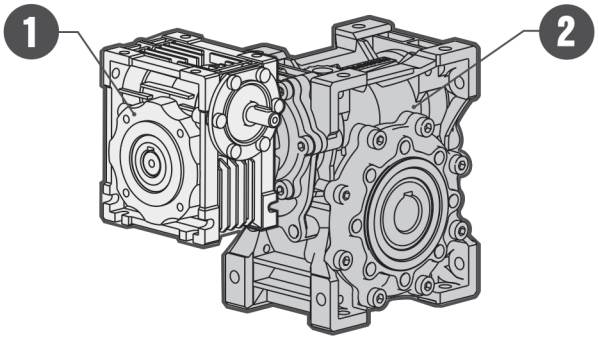

i	NMRV/NMRV	i1	i2
100	025/030	10	10
150		7.5	20
200		10	20
250		10	25
300		10	30
400		20	20
500		20	25
600		20	30
750		30	25
900		15	60
1200		30	40
1500		30	50
1800		60	30
2400		60	40
3000		60	50
4000		50	80

i	NMRV/NMRV	i1	i2
100	025/040	10	10
150		7.5	20
200		10	20
250		10	25
300		10	30
400		20	20
500		20	25
600		20	30
750		30	25
900		30	30
1200		30	40
1500		30	50
1800		60	30
2400		60	40
3000		60	50
4000		50	80
5000		50	100

i	NMRV/NMRV NRV/NMRV	i1	i2
100	030/040	10	10
150		10	15
200		10	20
250		10	25
300		10	30
400		10	40
500		20	25
600		20	30
750		25	30
900		30	30
1200		40	30
1500		50	30
1800		60	30
2400		60	40
3000		60	50
4000		50	80
5000		50	100

i	NMRV/NMRV NRV/NMRV	i1	i2
100	030/050	10	10
150		10	15
200		10	20
250		10	25
300		10	30
400		10	40
500		10	50
600		20	30
750		25	30
900		30	30
1200		40	30
1500		50	30
1800		60	30
2400		60	40
3000		60	50
4000		50	80
5000		50	100

i	NMRV/NMRVpower NRV/NMRVpower	i1	i2
100	030/063	10	10
150		10	15
200		10	20
250		10	25
300		7.5	40
400		10	40
500		10	50
600		20	30
750		25	30
900		30	30
1200		40	30
1500		50	30
1800		60	30
2400		60	40
3000		60	50
4000		80	50
5000		50	100

NMRV/NMRV - NRV/NMRV - NMRV/NMRVpower - NRV/NMRVpower - NMRVpower/NMRV NRVpower/NMRV - NMRVpower-NMRVpower - NRVpower-NMRVpower Ratios

i	NMRV/NMRV NRV/NMRV NMRV/NMRVpower NRV/NMRVpower	i1	i2
100	040/050	10	10
150		10	15
200		10	20
250		10	25
300		10	30
400		10	40
500		50	10
600		20	30
750		25	30
900		60	15
1200		40	30
1500		50	30
1800		60	30
2400		60	40
3000		60	50
4000		80	50
5000		100	50
100	040/063	10	10
150		10	15
200		10	20
250		10	25
300		10	30
400		10	40
500		20	25
600		20	30
750		25	30
900		30	30
1200		40	30
1500		50	30
1800		60	30
2400		60	40
3000		60	50
4000		80	50
5000		100	50
100	040/075	10	10
150		10	15
200		10	20
250		10	25
300		10	30
400		10	40
500		10	50
600		20	30
750		25	30
900		30	30
1200		40	30
1500		50	30
1800		60	30
2400		60	40
3000		60	50
4000		80	50
5000		100	50

i	NMRV/NMRVpower NRV/NMRVpower	i1	i2
100	040/090	10	10
150		10	15
200		10	20
250		10	25
300		10	30
400		10	40
500		10	50
600		20	30
750		25	30
900		30	30
1200		40	30
1500		50	30
1800		60	30
2400		60	40
3000		60	50
4000		80	50
5000		100	50
100	050/090	10	10
150		10	15
200		10	20
250		10	25
300		10	30
400		10	40
500		20	25
600		20	30
750		25	30
900		30	30
1200		40	30
1500		50	30
1800		60	30
2400		60	40
3000		60	50
4000		80	50
5000		100	50
100	050/110	10	10
150		10	15
200		10	20
250		10	25
300		10	30
400		10	40
500		20	25
600		20	30
750		25	30
900		30	30
1200		40	30
1500		50	30
1800		60	30
2400		60	40
3000		60	50
4000		80	50
5000		100	50

i	NMRVpower/NMRVpower NRVpower/NMRVpower NMRVpower/NMRV NRVpower/NMRV	i1	i2
100	063/110	10	10
150		10	15
200		10	20
250		10	25
300		10	30
400		10	40
500		20	25
600		20	30
750		25	30
900		30	30
1200		40	30
1500		50	30
1800		60	30
2400		60	40
3000		60	50
4000		80	50
5000		100	50
100	063/130	10	10
150		10	15
200		10	20
250		10	25
300		10	30
400		10	40
500		10	50
600		20	30
750		25	30
900		30	30
1200		40	30
1500		50	30
1800		60	30
2400		60	40
3000		60	50
4000		80	50
5000		100	50
150	063/150	7.5	20
200		10	20
250		10	25
300		15	20
400		10	40
500		10	50
600		15	40
750		15	50
900		30	30
1200		30	40
1500		30	50
1800		60	30
2400		60	40
3000		60	50
4000		80	50
5000		100	50

Efficiency

Efficiency is a parameter which has a major influence on the sizing of certain applications, and basically depends on gear pair design elements. The gear mesh data table on page 27 shows dynamic efficiency (n1=1750) and static efficiency values. Remember that these values are only achieved after the unit has been run in.

Dynamic irreversibility
Dynamic irreversibility is achieved when the output shaft stops instantly when drive is no longer transmitted through the worm shaft. This condition requires a dynamic efficiency of $\eta d < 0.5$ (see table on page 27).

Static irreversibility
Static irreversibility is achieved when, with the gear reducer at a standstill, the application of a load to the output shaft does not set in motion the worm shaft. This condition requires a static efficiency of $\eta s < 0.5$ (see table on page 27).
Note: Vibrations and shocks can affect a gear reducer's irreversibility.

Irreversibility

ηd	DYNAMIC IRREVERSIBILITY
>0.6	dynamic reversibility
0.5 ~ 0.6	low dynamic reversibility
0.4 ~ 0.5	good dynamic irreversibility
<0.4	dynamic irreversibility

ηs	STATIC IRREVERSIBILITY
>0.55	static reversibility
0.5 ~ 0.55	low static reversibility
<0.5	static irreversibility

- The table shows approximate irreversibility classes.
- The irreversibility condition of combined gear reducers is given by the units with the lowest efficiency.

Direction of rotation

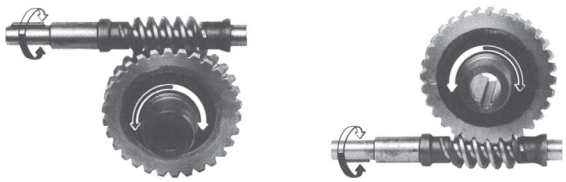

NMRV-NRV

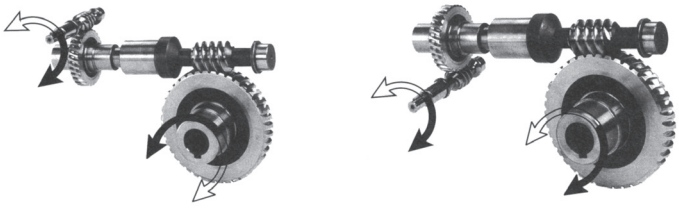

NMRV+NMRV - NRV+NMRV

- The helix is right-handed.

Gear mesh data

NMRV / NRV	i	5	7.5	10	15	20	25	30	40	50	60	80	100
030	Z1	6	4	3	2	2	1	1	1	1	1	1	
	γ	27°04'	18°49'	14°20'	9°40'	7°42'	5°35'	4°52'	3°52'	3°12'	2°45'	2°07'	
	Mx	1.44	1.44	1.44	1.44	1.09	1.7	1.44	1.09	0.89	0.74	0.56	
	ηδ(1750)	0.87	0.85	0.83	0.78	0.74	0.69	0.66	0.60	0.56	0.52	0.45	
	ηs	0.72	0.67	0.63	0.55	0.5	0.43	0.39	0.35	0.31	0.27	0.23	
040	Z1	6	4	3	2	2	2	1	1	1	1	1	1
	γ	34°19'	24°28'	18°51'	12°49'	10°23'	8°43'	6°29'	5°14'	4°23'	3°47'	2°57'	2°25'
	Mx	2.06	2.06	2.06	2.06	1.57	1.27	2.06	1.57	1.27	1.06	0.81	0.65
	ηδ(1750)	0.89	0.87	0.85	0.83	0.79	0.76	0.71	0.66	0.63	0.59	0.53	0.48
	ηs	0.74	0.71	0.67	0.6	0.55	0.51	0.45	0.4	0.36	0.32	0.28	0.24
050	Z1	6	4	3	2	2	2	1	1	1	1	1	1
	γ	33°37'	23°54'	18°23'	12°30'	10°06'	8°29'	6°19'	5°06'	4°16'	3°40'	2°52'	2°21'
	Mx	2.56	2.56	2.56	2.56	1.95	1.58	2.56	1.95	1.58	1.32	1	0.8
	ηδ(1750)	0.89	0.88	0.87	0.83	0.8	0.77	0.73	0.68	0.64	0.6	0.54	0.5
	ηs	0.74	0.7	0.66	0.59	0.55	0.51	0.44	0.39	0.35	0.32	0.27	0.23
063	Z1		4	3	2	2	2	1	1	1	1	1	1
	g		24°31'	18°53'	12°51'	10°25'	8°45'	6°30'	5°15'	4°24'	3°47'	2°58'	2°26'
	Mx		3.25	3.25	3.25	2.48	2	3.25	2.48	2	1.68	1.27	1.02
	ηδ(1750)		0.89	0.87	0.85	0.83	0.80	0.76	0.72	0.68	0.64	0.59	0.54
	ηs		0.71	0.67	0.6	0.55	0.51	0.45	0.4	0.36	0.33	0.28	0.24
075	Z1		4	3	2	2	2	1	1	1	1	1	1
	γ		26°17'	20°20'	13°52'	11°18'	9°32'	7°02'	5°42'	4°48'	4°08'	3°14'	2°40'
	Mx		3.94	3.94	3.94	3	2.42	3.94	3	2.42	2.03	1.54	1.24
	ηδ(1750)		0.89	0.88	0.86	0.84	0.82	0.78	0.74	0.71	0.67	0.62	0.57
	ηs		0.71	0.68	0.61	0.57	0.53	0.46	0.42	0.38	0.35	0.29	0.26
090	Z1		4	3	2	2	2	1	1	1	1	1	1
	γ		29°11'	22°44'	15°36'	12°50'	10°54'	7°57'	6°30'	5°30'	4°46'	3°45'	3°06'
	Mx		4.84	4.84	4.84	3.69	2.98	4.84	3.69	2.98	2.5	1.89	1.52
	ηδ(1750)		0.90	0.89	0.87	0.86	0.84	0.80	0.77	0.74	0.71	0.65	0.61
	ηs		0.73	0.7	0.64	0.6	0.56	0.49	0.45	0.41	0.38	0.32	0.28
110	Z1		4	3	2	2	2	1	1	1	1	1	1
	γ		28°15'	21°57'	15°02'	14°41'	12°34'	7°39'	7°28'	6°22'	5°32'	4°24'	3°39'
	Mx		5.875	5.875	5.875	4.62	3.73	5.875	4.62	3.73	3.13	2.37	1.91
	ηδ(1750)		0.90	0.89	0.88	0.87	0.86	0.81	0.80	0.77	0.75	0.69	0.65
	ηs		0.72	0.69	0.63	0.62	0.59	0.48	0.48	0.44	0.41	0.36	0.32
130	Z1		4	3	2	2	2	1	1	1	1	1	1
	γ		28°41'	22°19'	15°18'	13°52'	11°49'	7°47'	7°02'	5°58'	5°11'	4°07'	3°24'
	Mx		6.97	6.97	6.97	5.4	4.37	6.97	5.4	4.37	3.67	2.77	2.23
	ηδ(1750)		0.91	0.89	0.87	0.87	0.85	0.81	0.79	0.76	0.73	0.69	0.65
	ηs		0.72	0.69	0.63	0.61	0.58	0.49	0.46	0.43	0.39	0.34	0.3
150	Z1		6	4	3	2	2	2	1	1	1	1	1
	γ		32°09'	24°35'	17°27'	12°53'	11°19'	9°50'	6°32'	5°43'	4°57'	3°55'	3°14'
	Mx		5.5	6.155	5.5	6.155	5	4.193	6.155	5	4.193	3.17	2.55
	ηδ(1750)		0.91	0.9	0.88	0.87	0.85	0.84	0.79	0.77	0.74	0.69	0.65
	ηs		0.73	0.71	0.66	0.6	0.57	0.54	0.45	0.42	0.39	0.33	0.29

NMRV - NMRVpower - Angular backlash

NMRV 030	NMRV 040	NMRV 050	NMRV-P 063	NMRV-P 075	NMRV-P 090	NMRV-P 110	NMRV 130	NMRV 150
20’ - 44’	18’ - 34’	18’ - 32’	18’ - 28’	18’ - 24’	6’ - 18’	6’ - 14’	6’ - 12’	6’ - 12’

- Such values in ARC-minute can be detected on the output shaft, with locked input shaft. For applications requiring controlled or reduced backlash, please contact our technical service.

Motor mounting with PAM flange - NMRV

When the unit is supplied without motor, to ensure
the correct assembly of the electric motor, it is necessary to follow reccomendations below.
Check that the tolerances for the motor shaft and flange correspond to the latest IEC standard.
Carefully clean the motor shaft, spigot and surfaces
of the flange removing any traces of paint and dirt.

Proceed to the sleeve mountage to the motor shaft taking care to ensure the motor shaft and bearings
are not damaged by avoiding excessive force and where necessary using assembly equipment.
Always use good procedures and practises that ensure correct operation without risking damage to the motor or unit bearings. Motor key adjustment is not provided.

Motor mounting with PAM flange - NMRV-P

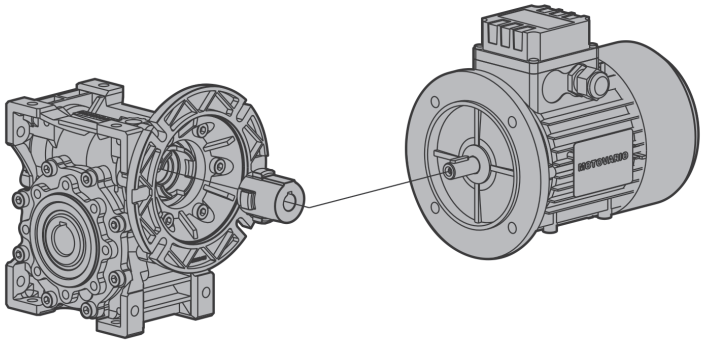

- When the unit is supplied without motor, to ensure the correct assembly of the electric motor, it is necessary to follow reccomendations below.
- Check that the tolerances for the motor shaft and flange correspond to the latest IEC standard.
- Carefully clean the motor shaft, spigot and surfaces of the flange removing any traces of paint and dirt.
- Verify the correct key fitment and tolerances and then proceed fitting the bushing to the motor shaft (see picture) taking care to ensure the motor shaft and bearings are not damaged by avoiding excessive force and where necessary using assembly equipment.
- Finally assembly the motor to the unit ensuring its bushin teeth are in perfect alignment with the teeth of the unit bushing. Always use good procedures and practises that ensure correct operation without risking damage to the motor or unit bearings. Motor key adjustment is not provided.

NMRV - NMRVpower - Mounting positions

NMRV-NMRVpower - NRV- NRVpower			
NMRVpower...U - B3	B6	V5	V6
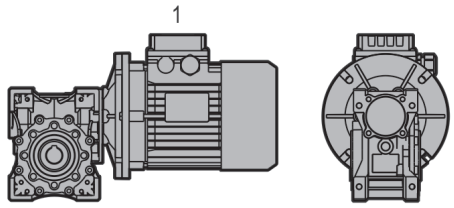	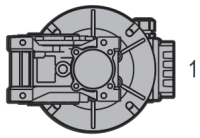	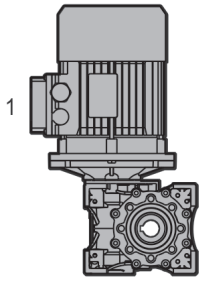	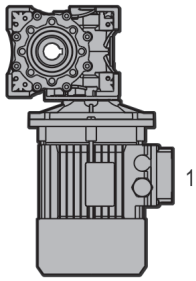
B8	B7		
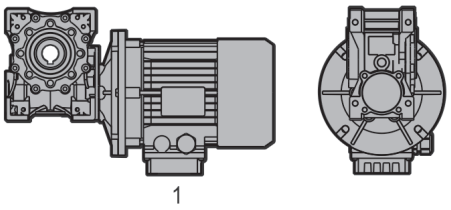	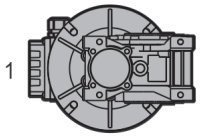		

- "U" version is related to sizes from NMRV/NMRV-P 025-075 and NRV/NRV-P 030-063. For these sizes it is not necessary to specify mounting position.
- For vertical positions, check with page 6.
- For positions not shown above, it is necessary to contact our Technical Service.
- Unless specified otherwise, the standard positions are B3.
- Mount the unit in the expected mounting position. Otherwise contact our Technical Service.
- Unless otherwise specified, the gear reducer is supplied with terminal box in position 1.

NMRV+NMRV - NMRV+NMRVpower - Double worm gearbox assembly positions

NMRV-NMRVpower / NRV-NMRVpower			
AS1	**AS2**	**VS1**	**VS2**
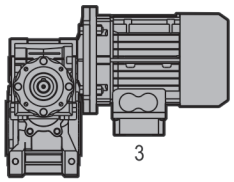	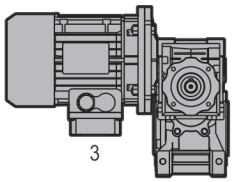	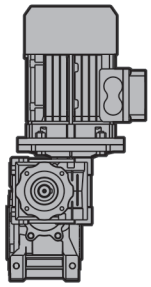	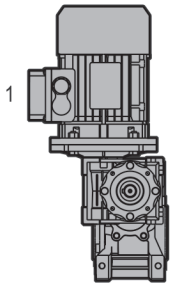
PS1	**PS2**	**BS1**	**BS2**
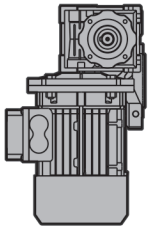	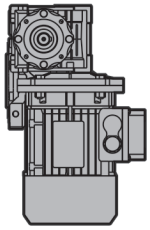	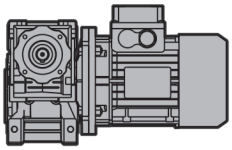	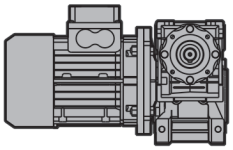

- The position of the 1st reducer with respect to the 2nd gear reducer depend on the version.
- The specified mounting position refers to the 2nd gear reducer. See page 29 for the possible mounting positions.
- Unless otherwise specified at the time of order, combination groups are supplied in version BS2.
- Mount the unit in the expected mounting position. Otherwise contact our Technical Service.
- Unless otherwise specified, the gear reducer is supplied with terminal box in position 1.

HA31+NMRV - Mounting positions

HA31 - NMRV			
B3	B6	V5	V6
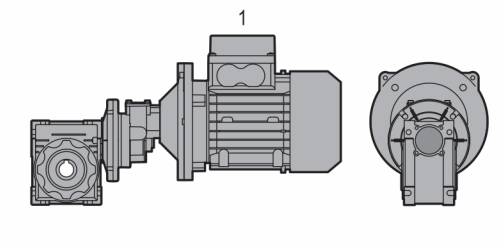	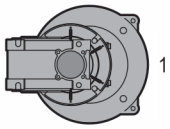	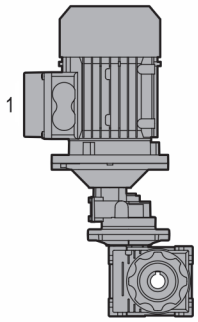	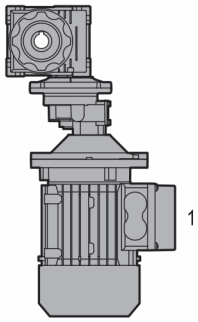
B8	B7		
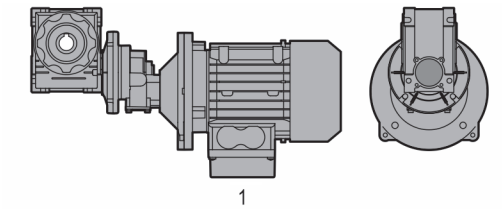	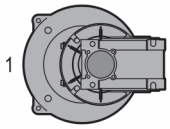		

- The mounting position is U and it is valid for all mounting positions.
- Mount the unit in the expected mounting position. Otherwise contact our Technical Service.
- Unless otherwise specified, the gear reducer is supplied with terminal box in position 1.

HA31+NMRV - Execution

HA31 - NMRV	
BS	**AS**
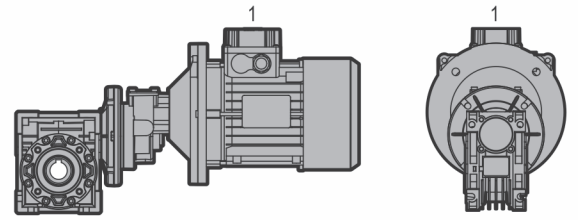	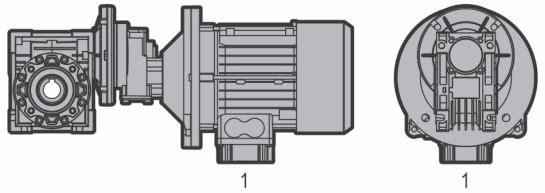
VS	**PS**
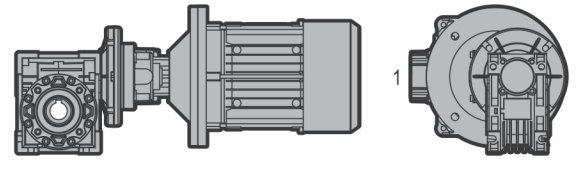	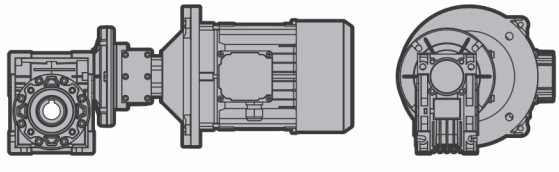

- Unless specified otherwise, the standard positions are BS/B3.
- Unless otherwise specified, the gear reducer is supplied with terminal box in position 1.
- N.B.: When ordering, please always specify execution and mounting position.

NMRVpower/HW - Mounting positions

NMRVpower/HW			
B3	B6	V5	V6
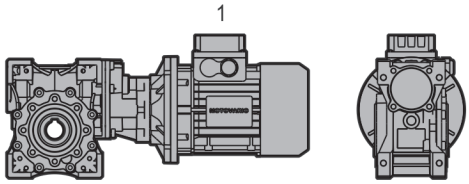	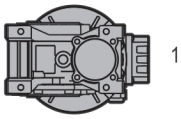	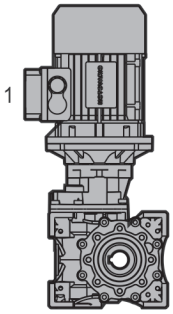	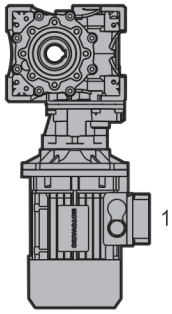
B8	B7		
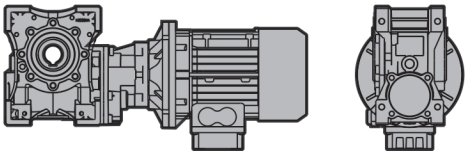	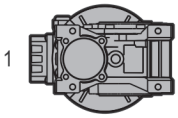		

- For NMRVpower/HW 063-075 mounting position B3 is valid also for B6-B7-B8-V6. Mounting position V5 must be specified.
- For NMRV 090-110 mounting position B3 is valid also for B6-B7-B8. Mounting positions V5 and V6 must be specified.
- For NMRV 130-150 mounting positions B3-B6-B7-B8-V5-V6 must be specified.
- Unless specified otherwise, the standard positions are BS/B3.
- Mount the unit in the expected mounting position. Otherwise contact our Technical Service.
- Unless otherwise specified, the gear reducer is supplied with terminal box in position 1.

Worm Gearmotor Ratings - Motor Speed 1750 rpm

0.08 HP

Output speed RPM	Service factor sf	Output torque in-lbs	Exact ratio i	Max. torque in-lbs	OHL Output shaft lbs	Gearmotor		Gear Reducer	
						Reducer	Motor	Reducer	NEMA C-input
350	7.3	13	5	92	92	**NMRV025**	56A4	-	-
350	12.7	13	5	160	125	**NMRV030**	56A4	-	-
233	5.0	18	7.5	92	105	**NMRV025**	56A4	-	-
233	8.7	18	7.5	160	143	**NMRV030**	56A4	-	-
175	4.2	24	10	101	115	**NMRV025**	56A4	-	-
175	6.7	24	10	160	157	**NMRV030**	56A4	-	-
117	2.9	34	15	101	132	**NMRV025**	56A4	-	-
117	4.7	34	15	160	180	**NMRV030**	56A4	-	-
88	2.3	43	20	101	146	**NMRV025**	56A4	-	-
88	3.5	43	20	151	198	**NMRV030**	56A4	-	-
70	3.7	50	25	185	213	**NMRV030**	56A4	-	-
58	3.1	57	30	177	226	**NMRV030**	56A4	-	-
58	1.9	58	30	109	167	**NMRV025**	56A4	-	-
44	2.3	70	40	160	249	**NMRV030**	56A4	-	-
44	1.5	72	40	109	183	**NMRV025**	56A4	-	-
35	1.9	81	50	151	268	**NMRV030**	56A4	-	-
35	1.1	84	50	92	197	**NMRV025**	56A4	-	-
29	1.5	90	60	134	285	**NMRV030**	56A4	-	-
35	3.9	91	50	353	517	**NMRV040**	56A4	-	-
29	3.1	103	60	319	549	**NMRV040**	56A4	-	-
22	1.0	104	80	109	314	**NMRV030**	56A4	-	-
22	2.3	123	80	277	604	**NMRV040**	56A4	-	-
18	1.8	139	100	244	651	**NMRV040**	56A4	-	-

0.12 HP

Output speed RPM	Service factor sf	Output torque in-lbs	Exact ratio i	Max. torque in-lbs	OHL Output shaft lbs	Gearmotor		Gear Reducer	
						Reducer	Motor	Reducer	NEMA C-input
350	4.9	19	5	92	92	**NMRV025**	56B4	-	-
350	8.5	19	5	160	125	**NMRV030**	56B4	-	-
233	3.3	28	7.5	92	105	**NMRV025**	56B4	-	-
233	5.8	28	7.5	160	143	**NMRV030**	56B4	-	-
175	2.8	36	10	101	115	**NMRV025**	56B4	-	-
175	4.4	36	10	160	157	**NMRV030**	56B4	-	-
117	3.1	51	15	160	180	**NMRV030**	56B4	-	-
117	2.0	52	15	101	132	**NMRV025**	56B4	-	-
88	2.3	64	20	151	198	**NMRV030**	56B4	-	-
88	1.5	65	20	101	146	**NMRV025**	56B4	-	-
70	2.5	75	25	185	213	**NMRV030**	56B4	-	-
58	2.1	86	30	177	226	**NMRV030**	56B4	-	-
58	1.3	87	30	109	167	**NMRV025**	56B4	-	-
44	1.5	104	40	160	249	**NMRV030**	56B4	-	-
44	1.0	108	40	109	183	**NMRV025**	56B4	-	-
35	1.2	122	50	151	268	**NMRV030**	56B4	-	-
35	2.6	137	50	353	517	**NMRV040**	56B4	-	-
29	2.1	154	60	319	549	**NMRV040**	56B4	-	-
22	1.5	184	80	277	604	**NMRV040**	56B4	-	-
18	1.2	209	100	244	651	**NMRV040**	56B4	-	-

0.16 HP

Output speed RPM	Service factor sf	Output torque in-lbs	Exact ratio i	Max. torque in-lbs	OHL Output shaft lbs	Gearmotor		Gear Reducer	
						Reducer	Motor	Reducer	NEMA C-input
350	6.3	25	5	160	125	**NMRV030**	63A4	**NMRV030**	48C
350	11.7	26	5	303	240	**NMRV040**	63A4	**NMRV040**	56C
233	4.3	37	7.5	160	143	**NMRV030**	63A4	**NMRV030**	48C
233	9.3	38	7.5	353	274	**NMRV040**	63A4	**NMRV040**	56C
175	3.3	48	10	160	157	**NMRV030**	63A4	**NMRV030**	48C
175	7.5	49	10	370	302	**NMRV040**	63A4	**NMRV040**	56C
117	2.4	68	15	160	180	**NMRV030**	63A4	**NMRV030**	48C
117	5.1	72	15	370	346	**NMRV040**	63A4	**NMRV040**	56C
88	1.8	86	20	151	198	**NMRV030**	63A4	**NMRV030**	48C
88	3.9	92	20	361	381	**NMRV040**	63A4	**NMRV040**	56C
70	1.9	100	25	185	213	**NMRV030**	63A4	**NMRV030**	48C
70	3.0	110	25	328	410	**NMRV040**	63A4	**NMRV040**	56C
70	5.4	112	25	597	563	**-**	-	**NMRV050**	56C
58	1.5	115	30	177	226	**NMRV030**	63A4	**NMRV030**	48C
58	3.3	124	30	403	436	**NMRV040**	63A4	**NMRV040**	56C
58	5.8	127	30	740	598	**-**	-	**NMRV050**	56C
44	1.2	139	40	160	249	**NMRV030**	63A4	**NMRV030**	48C
44	2.5	153	40	378	479	**NMRV040**	63A4	**NMRV040**	56C
44	4.4	158	40	689	658	**NMRV050**	63A4	**NMRV050**	56C
35	1.9	183	50	353	517	**NMRV040**	63A4	**NMRV040**	56C
35	3.5	186	50	647	709	**NMRV050**	63A4	**NMRV050**	56C
29	1.6	205	60	319	549	**NMRV040**	63A4	**NMRV040**	56C
29	2.9	209	60	605	753	**NMRV050**	63A4	**NMRV050**	56C
29	5.1	224	60	1135	985	**-**	-	**NMRV-P063**	56C
22	1.1	246	80	277	604	**NMRV040**	63A4	**NMRV040**	56C
22	2.2	250	80	546	829	**NMRV050**	63A4	**NMRV050**	56C
22	3.7	275	80	1027	1084	**-**	-	**NMRV-P063**	56C
18	1.6	290	100	462	893	**NMRV050**	63A4	**NMRV050**	56C
18	3.2	310	100	992	1168	**-**	-	**NMRV-P063**	56C

0.25 HP

Output speed RPM	Service factor sf	Output torque in-lbs	Exact ratio i	Max. torque in-lbs	OHL Output shaft lbs	Gearmotor		Gear Reducer	
						Reducer	Motor	Reducer	NEMA C-input
350	4.2	38	5	160	125	**NMRV030**	63B4	**NMRV030**	48C
350	7.8	39	5	303	240	**NMRV040**	63B4	**NMRV040**	56C
233	2.9	55	7.5	160	143	**NMRV030**	63B4	**NMRV030**	48C
233	6.2	57	7.5	353	274	**NMRV040**	63B4	**NMRV040**	56C
175	2.2	72	10	160	157	**NMRV030**	63B4	**NMRV030**	48C
175	5.0	74	10	370	302	**NMRV040**	63B4	**NMRV040**	56C
117	1.6	102	15	160	180	**NMRV030**	63B4	**NMRV030**	48C
117	3.4	108	15	370	346	**NMRV040**	63B4	**NMRV040**	56C
88	1.2	129	20	151	198	**NMRV030**	63B4	**NMRV030**	48C
88	2.6	137	20	361	381	**NMRV040**	63B4	**NMRV040**	56C
88	4.7	139	20	656	522	**-**	-	**NMRV050**	56C
70	1.2	150	25	185	213	**NMRV030**	63B4	**NMRV030**	48C
70	2.0	165	25	328	410	**NMRV040**	63B4	**NMRV040**	56C
70	3.6	167	25	597	563	**-**	-	**NMRV050**	56C
58	1.0	172	30	177	226	**NMRV030**	63B4	**NMRV030**	48C
58	2.2	185	30	403	436	**NMRV040**	63B4	**NMRV040**	56C
58	3.9	190	30	740	598	**-**	-	**NMRV050**	56C
44	1.6	230	40	378	479	**NMRV040**	63B4	**NMRV040**	56C
44	2.9	237	40	689	658	**NMRV050**	63B4	**NMRV050**	56C

0.25 HP

Output speed RPM	Service factor sf	Output torque in-lbs	Exact ratio i	Max. torque in-lbs	OHL Output shaft lbs	Gearmotor		Gear Reducer	
						Reducer	Motor	Reducer	NEMA C-input
44	5.0	251	40	1261	860	-	-	NMRV-P063	56C
35	1.3	274	50	353	517	NMRV040	63B4	NMRV040	56C
35	2.3	278	50	647	709	NMRV050	63B4	NMRV050	56C
35	4.1	296	50	1208	927	-	-	NMRV-P063	56C
29	1.0	308	60	319	549	NMRV040	63B4	NMRV040	56C
29	1.9	313	60	605	753	NMRV050	63B4	NMRV050	56C
29	3.4	335	60	1135	985	-	-	NMRV-P063	56C
22	1.5	376	80	546	829	NMRV050	63B4	NMRV050	56C
22	2.5	413	80	1027	1084	-	-	NMRV-P063	56C
22	3.8	433	80	1632	1279	-	-	NMRV-P075	56C
18	1.1	435	100	462	893	NMRV050	63B4	NMRV050	56C
18	2.1	465	100	992	1168	-	-	NMRV-P063	56C
18	3.0	498	100	1517	1378	-	-	NMRV-P075	56C

0.33 HP

Output speed RPM	Service factor sf	Output torque in-lbs	Exact ratio i	Max. torque in-lbs	OHL Output shaft lbs	Gearmotor		Gear Reducer	
						Reducer	Motor	Reducer	NEMA C-input
350	3.0	53	5	160	125	NMRV030	63D4	NMRV030	48C
233	2.1	77	7.5	160	143	NMRV030	63D4	NMRV030	48C
175	1.6	100	10	160	157	NMRV030	63D4	NMRV030	48C
175	3.6	103	10	370	302	NMRV040	63D4/71A4	NMRV040	56C
117	1.1	141	15	160	180	NMRV030	63D4	NMRV030	48C
117	2.5	150	15	370	346	NMRV040	63D4/71A4	NMRV040	56C
88	1.9	191	20	361	381	NMRV040	63D4/71A4	NMRV040	56C
88	3.4	193	20	656	522	NMRV050	71A4	NMRV050	56C
70	1.4	230	25	328	410	NMRV040	63D4/71A4	NMRV040	56C
70	2.6	233	25	597	563	NMRV050	71A4	NMRV050	56C
58	1.6	257	30	403	436	NMRV040	63D4/71A4	NMRV040	56C
58	2.8	265	30	740	598	NMRV050	71A4	NMRV050	56C
44	1.2	319	40	378	479	NMRV040	63D4/71A4	NMRV040	56C
44	2.1	329	40	689	658	NMRV050	63D4/71A4	NMRV050	56C
44	3.6	348	40	1261	860	NMRV-P063	71A4	NMRV-P063	56C
35	1.7	387	50	647	709	NMRV050	63D4/71A4	NMRV050	56C
35	2.9	411	50	1208	927	NMRV-P063	71A4	NMRV-P063	56C
29	1.4	435	60	605	753	NMRV050	63D4/71A4	NMRV050	56C
29	2.4	466	60	1135	985	NMRV-P063	71A4	NMRV-P063	56C
29	3.6	488	60	1778	1162	NMRV-P075	71A4	NMRV-P075	56C
22	1.0	522	80	546	829	NMRV050	63D4/71A4	NMRV050	56C
22	1.8	574	80	1027	1084	NMRV-P063	71A4	NMRV-P063	56C
22	2.7	602	80	1632	1279	NMRV-P075	71A4	NMRV-P075	56C
22	3.8	631	80	2397	1416	-	-	NMRV-P090	56C
18	1.5	646	100	992	1168	NMRV-P063	71A4	NMRV-P063	56C
18	2.2	692	100	1517	1378	NMRV-P075	71A4	NMRV-P075	56C
18	3.1	740	100	2271	1525	-	-	NMRV-P090	56C

0.50 HP

Output speed RPM	Service factor sf	Output torque in-lbs	Exact ratio i	Max. torque in-lbs	OHL Output shaft lbs	Gearmotor		Gear Reducer	
						Reducer	Motor	Reducer	NEMA C-input
350	3.8	80	5	303	240	NMRV040	71B4	NMRV040	56C
233	3.0	117	7.5	353	274	NMRV040	71B4	NMRV040	56C

0.50 HP

Output speed RPM	Service factor sf	Output torque in-lbs	Exact ratio i	Max. torque in-lbs	OHL Output shaft lbs	Gearmotor		Gear Reducer	
						Reducer	Motor	Reducer	NEMA C-input
175	2.4	152	10	370	302	**NMRV040**	71B4	**NMRV040**	56C
117	1.7	223	15	370	346	**NMRV040**	71B4	**NMRV040**	56C
117	3.1	223	15	681	475	**NMRV050**	71B4	**NMRV050**	56C
88	1.3	282	20	361	381	**NMRV040**	71B4	**NMRV040**	56C
88	2.3	286	20	656	522	**NMRV050**	71B4	**NMRV050**	56C
70	1.7	344	25	597	563	**NMRV050**	71B4	**NMRV050**	56C
70	3.1	357	25	1124	736	**NMRV-P063**	71B4	**NMRV-P063**	56C
58	1.1	381	30	403	436	**NMRV040**	71B4	**NMRV040**	56C
58	1.9	392	30	740	598	**NMRV050**	71B4	**NMRV050**	56C
58	3.3	407	30	1345	782	**NMRV-P063**	71B4	**NMRV-P063**	56C
44	1.4	486	40	689	658	**NMRV050**	71B4	**NMRV050**	56C
44	2.4	515	40	1261	860	**NMRV-P063**	71B4	**NMRV-P063**	56C
44	3.8	530	40	2029	1015	**NMRV-P075**	71B4	**NMRV-P075**	56C
35	1.1	572	50	647	709	**NMRV050**	71B4	**NMRV050**	56C
35	2.0	609	50	1208	927	**NMRV-P063**	71B4	**NMRV-P063**	56C
35	3.0	635	50	1881	1094	**NMRV-P075**	71B4	**NMRV-P075**	56C
29	1.6	690	60	1135	985	**NMRV-P063**	71B4	**NMRV-P063**	56C
29	2.5	722	60	1778	1162	**NMRV-P075**	71B4	**NMRV-P075**	56C
29	3.9	762	60	2960	1286	**-**	-	**NMRV-P090**	56C
22	1.2	849	80	1027	1084	**NMRV-P063**	71B4	**NMRV-P063**	56C
22	1.8	891	80	1632	1279	**NMRV-P075**	71B4	**NMRV-P075**	56C
22	2.6	934	80	2397	1416	**-**	-	**NMRV-P090**	56C
18	1.0	957	100	992	1168	**NMRV-P063**	71B4	**NMRV-P063**	56C
18	1.5	1024	100	1517	1378	**NMRV-P075**	71B4	**NMRV-P075**	56C
18	2.1	1096	100	2271	1525	**-**	-	**NMRV-P090**	56C

0.75 HP

Output speed RPM	Service factor sf	Output torque in-lbs	Exact ratio i	Max. torque in-lbs	OHL Output shaft lbs	Gearmotor		Gear Reducer	
						Reducer	Motor	Reducer	NEMA C-input
350	2.6	118	5	303	240	**NMRV040**	71C4	**NMRV040**	56C
233	2.0	173	7.5	353	274	**NMRV040**	71C4	**NMRV040**	56C
233	3.7	175	7.5	647	377	**NMRV050**	71C4/80A4	**NMRV050**	56C
175	1.6	226	10	370	302	**NMRV040**	71C4	**NMRV040**	56C
175	2.9	231	10	664	415	**NMRV050**	71C4/80A4	**NMRV050**	56C
117	1.1	331	15	370	346	**NMRV040**	71C4	**NMRV040**	56C
117	2.1	331	15	681	475	**NMRV050**	71C4/80A4	**NMRV050**	56C
117	3.7	337	15	1236	620	**NMRV-P063**	71C4/80A4	**NMRV-P063**	56C
88	1.5	425	20	656	522	**NMRV050**	71C4/80A4	**NMRV050**	56C
88	2.8	439	20	1225	683	**NMRV-P063**	71C4/80A4	**NMRV-P063**	56C
70	1.2	512	25	597	563	**NMRV050**	71C4/80A4	**NMRV050**	56C
70	2.1	531	25	1124	736	**NMRV-P063**	71C4/80A4	**NMRV-P063**	56C
70	3.3	542	25	1784	868	**NMRV-P075**	71C4/80A4	**NMRV-P075**	56C
58	1.3	582	30	740	598	**NMRV050**	71C4/80A4	**NMRV050**	56C
58	2.2	605	30	1345	782	**NMRV-P063**	71C4/80A4	**NMRV-P063**	56C
58	3.3	621	30	2028	923	**NMRV-P075**	71C4/80A4	**NMRV-P075**	56C
44	1.6	766	40	1261	860	**NMRV-P063**	71C4/80A4	**NMRV-P063**	56C
44	2.6	787	40	2029	1015	**NMRV-P075**	71C4/80A4	**NMRV-P075**	56C
35	1.3	905	50	1208	927	**NMRV-P063**	71C4/80A4	**NMRV-P063**	56C
35	2.0	944	50	1881	1094	**NMRV-P075**	71C4/80A4	**NMRV-P075**	56C
35	3.2	981	50	3145	1210	**NMRV-P090**	80A4	**NMRV-P090**	56C
29	1.1	1025	60	1135	985	**NMRV-P063**	71C4/80A4	**NMRV-P063**	56C
29	1.7	1073	60	1778	1162	**NMRV-P075**	71C4/80A4	**NMRV-P075**	56C
29	2.6	1133	60	2960	1286	**NMRV-P090**	80A4	**NMRV-P090**	56C

0.75 HP

Output speed RPM	Service factor sf	Output torque in-lbs	Exact ratio i	Max. torque in-lbs	OHL Output shaft lbs	Gearmotor		Gear Reducer	
						Reducer	Motor	Reducer	NEMA C-input
22	1.2	1324	80	1632	1279	**NMRV-P075**	71C4/80A4	**NMRV-P075**	56C
22	1.7	1388	80	2397	1416	**NMRV-P090**	80A4	**NMRV-P090**	56C
22	2.9	1473	80	4330	1789	**NMRV-P110**	80A4	**-**	-
18	1.4	1629	100	2271	1525	**NMRV-P090**	80A4	**NMRV-P090**	56C
18	2.3	1735	100	4061	1927	**NMRV-P110**	80A4	**-**	-

1.00 HP

Output speed RPM	Service factor sf	Output torque in-lbs	Exact ratio i	Max. torque in-lbs	OHL Output shaft lbs	Gearmotor		Gear Reducer	
						Reducer	Motor	Reducer	NEMA C-input
350	3.5	161	5	572	329	**NMRV050**	80B4	**NMRV050**	56C
350	1.9	161	5	303	240	**-**	-	**NMRV040**	56C
233	1.5	236	7.5	353	274	**-**	-	**NMRV040**	56C
233	2.7	239	7.5	647	377	**NMRV050**	80B4	**NMRV050**	56C
175	1.2	308	10	370	302	**-**	-	**NMRV040**	56C
175	2.1	315	10	664	415	**NMRV050**	80B4	**NMRV050**	56C
175	3.5	317	10	1108	542	**NMRV-P063**	80B4	**NMRV-P063**	56C/143/145TC
117	1.5	451	15	681	475	**NMRV050**	80B4	**NMRV050**	56C
117	2.7	460	15	1236	620	**NMRV-P063**	80B4	**NMRV-P063**	56C/143/145TC
88	1.1	580	20	656	522	**NMRV050**	80B4	**NMRV050**	56C
88	2.0	599	20	1225	683	**NMRV-P063**	80B4	**NMRV-P063**	56C/143/145TC
88	3.2	606	20	1953	806	**NMRV-P075**	80B4	**NMRV-P075**	56C/143/145TC
70	1.6	724	25	1124	736	**NMRV-P063**	80B4	**NMRV-P063**	56C/143/145TC
70	2.4	740	25	1784	868	**NMRV-P075**	80B4	**NMRV-P075**	56C/143/145TC
58	1.6	825	30	1345	782	**NMRV-P063**	80B4	**NMRV-P063**	56C/143/145TC
58	2.4	846	30	2028	923	**NMRV-P075**	80B4	**NMRV-P075**	56C/143/145TC
44	1.2	1045	40	1261	860	**NMRV-P063**	80B4	**NMRV-P063**	56C/143/145TC
44	1.9	1074	40	2029	1015	**NMRV-P075**	80B4	**NMRV-P075**	56C/143/145TC
44	3.0	1114	40	3330	1123	**NMRV-P090**	80B4	**NMRV-P090**	56C/143/145TC
35	1.5	1288	50	1881	1094	**NMRV-P075**	80B4	**NMRV-P075**	56C/143/145TC
35	2.3	1338	50	3145	1210	**NMRV-P090**	80B4	**NMRV-P090**	56C/143/145TC
35	4.0	1393	50	5550	1529	**NMRV-P110**	80B4	**NMRV-P110**	143/145TC
29	1.2	1464	60	1778	1162	**NMRV-P075**	80B4	**NMRV-P075**	56C/143/145TC
29	1.9	1545	60	2960	1286	**NMRV-P090**	80B4	**NMRV-P090**	56C/143/145TC
29	3.2	1628	60	5180	1625	**NMRV-P110**	80B4	**NMRV-P110**	143/145TC
22	1.3	1893	80	2397	1416	**NMRV-P090**	80B4	**NMRV-P090**	56C/143/145TC
22	3.5	2000	80	7063	2339	**-**	-	**NMRV130**	143/145TC
22	2.2	2009	80	4330	1789	**NMRV-P110**	80B4	**NMRV-P110**	143/145TC
18	1.0	2221	100	2271	1525	**NMRV-P090**	80B4	**NMRV-P090**	56C/143/145TC
18	2.6	2356	100	6222	2520	**-**	-	**NMRV130**	143/145TC
18	1.7	2366	100	4061	1927	**NMRV-P110**	80B4	**NMRV-P110**	143/145TC

1.50 HP

Output speed RPM	Service factor sf	Output torque in-lbs	Exact ratio i	Max. torque in-lbs	OHL Output shaft lbs	Gearmotor		Gear Reducer	
						Reducer	Motor	Reducer	NEMA C-input
350	2.4	237	5	572	329	**NMRV050**	80D4	**NMRV050**	56C
350	1.3	237	5	303	240	**-**	-	**NMRV040**	56C
233	1.0	347	7.5	353	274	**-**	-	**NMRV040**	56C
233	1.8	351	7.5	647	377	**NMRV050**	80D4	**NMRV050**	56C
233	3.0	357	7.5	1076	492	**NMRV-P063**	80D4/90S4	**NMRV-P063**	56C/143/145TC
175	1.4	462	10	664	415	**NMRV050**	80D4	**NMRV050**	56C

1.50 HP

Output speed RPM	Service factor sf	Output torque in-lbs	Exact ratio i	Max. torque in-lbs	OHL Output shaft lbs	Gearmotor		Gear Reducer	
						Reducer	Motor	Reducer	NEMA C-input
175	2.4	465	10	1108	542	**NMRV-P063**	80D4/90S4	**NMRV-P063**	56C/143/145TC
175	3.5	470	10	1656	640	**NMRV-P075**	80D4/90S4	**NMRV-P075**	56C/143/145TC
117	1.0	662	15	681	475	**NMRV050**	80D4	**NMRV050**	56C
117	1.8	675	15	1236	620	**NMRV-P063**	80D4/90S4	**NMRV-P063**	56C/143/145TC
117	2.8	689	15	1900	732	**NMRV-P075**	80D4/90S4	**NMRV-P075**	56C/143/145TC
88	1.4	879	20	1225	683	**NMRV-P063**	80D4/90S4	**NMRV-P063**	56C/143/145TC
88	2.2	889	20	1953	806	**NMRV-P075**	80D4/90S4	**NMRV-P075**	56C/143/145TC
88	3.6	910	20	3288	892	**NMRV-P090**	80D4/90S4	**NMRV-P090**	56C/143/145TC
70	1.1	1061	25	1124	736	**NMRV-P063**	80D4/90S4	**NMRV-P063**	56C/143/145TC
70	1.6	1085	25	1784	868	**NMRV-P075**	80D4/90S4	**NMRV-P075**	56C/143/145TC
70	2.8	1111	25	3145	961	**NMRV-P090**	80D4/90S4	**NMRV-P090**	56C/143/145TC
58	1.1	1210	30	1345	782	**NMRV-P063**	80D4/90S4	**NMRV-P063**	56C/143/145TC
58	1.6	1241	30	2028	923	**NMRV-P075**	80D4/90S4	**NMRV-P075**	56C/143/145TC
58	2.9	1273	30	3632	1021	**NMRV-P090**	80D4/90S4	**NMRV-P090**	56C/143/145TC
44	1.3	1575	40	2029	1015	**NMRV-P075**	80D4/90S4	**NMRV-P075**	56C/143/145TC
44	2.0	1634	40	3330	1123	**NMRV-P090**	80D4/90S4	**NMRV-P090**	56C/143/145TC
44	3.5	1698	40	5903	1420	**NMRV-P110**	80D4/90S4	**NMRV-P110**	143/145TC
35	1.6	1963	50	3145	1210	**NMRV-P090**	80D4/90S4	**NMRV-P090**	56C/143/145TC
35	2.7	2043	50	5550	1529	**NMRV-P110**	80D4/90S4	**NMRV-P110**	143/145TC
29	1.3	2267	60	2960	1286	**NMRV-P090**	80D4/90S4	**NMRV-P090**	56C/143/145TC
29	2.2	2387	60	5180	1625	**NMRV-P110**	80D4/90S4	**NMRV-P110**	143/145TC
22	2.4	2934	80	7063	2339	**NMRV130**	90S4	**NMRV130**	143/145TC
22	1.5	2946	80	4330	1789	**NMRV-P110**	80D4/90S4	**NMRV-P110**	143/145TC
18	1.8	3455	100	6222	2520	**NMRV130**	90S4	**NMRV130**	143/145TC
18	1.2	3470	100	4061	1927	**NMRV-P110**	80D4/90S4	**NMRV-P110**	143/145TC

2.00 HP

Output speed RPM	Service factor sf	Output torque in-lbs	Exact ratio i	Max. torque in-lbs	OHL Output shaft lbs	Gearmotor		Gear Reducer	
						Reducer	Motor	Reducer	NEMA C-input
350	1.8	323	5	572	329	**-**	-	**NMRV050**	56C
233	1.4	478	7.5	647	377	**-**	-	**NMRV050**	56C
233	2.2	486	7.5	1076	492	**NMRV-P063**	90LA4	**NMRV-P063**	56C/143/145TC
233	3.2	486	7.5	1555	581	**NMRV-P075**	90LA4	**NMRV-P075**	56C/143/145TC
175	1.1	631	10	664	415	**-**	-	**NMRV050**	56C
175	1.7	634	10	1108	542	**NMRV-P063**	90LA4	**NMRV-P063**	56C/143/145TC
175	2.6	641	10	1656	640	**NMRV-P075**	90LA4	**NMRV-P075**	56C/143/145TC
117	1.3	920	15	1236	620	**NMRV-P063**	90LA4	**NMRV-P063**	56C/143/145TC
117	2.0	940	15	1900	732	**NMRV-P075**	90LA4	**NMRV-P075**	56C/143/145TC
117	3.5	951	15	3330	810	**NMRV-P090**	90LA4	**NMRV-P090**	56C/143/145TC
88	1.0	1198	20	1225	683	**NMRV-P063**	90LA4	**NMRV-P063**	56C/143/145TC
88	1.6	1213	20	1953	806	**NMRV-P075**	90LA4	**NMRV-P075**	56C/143/145TC
88	2.6	1241	20	3288	892	**NMRV-P090**	90LA4	**NMRV-P090**	56C/143/145TC
70	1.2	1479	25	1784	868	**NMRV-P075**	90LA4	**NMRV-P075**	56C/143/145TC
70	2.1	1516	25	3145	961	**NMRV-P090**	90LA4	**NMRV-P090**	56C/143/145TC
70	3.7	1552	25	5709	1214	**NMRV-P110**	90LA4	**NMRV-P110**	143/145TC
58	1.2	1693	30	2028	923	**NMRV-P075**	90LA4	**NMRV-P075**	56C/143/145TC
58	2.1	1736	30	3632	1021	**NMRV-P090**	90LA4	**NMRV-P090**	56C/143/145TC
58	3.5	1758	30	6096	1290	**NMRV-P110**	90LA4	**NMRV-P110**	143/145TC
44	1.5	2228	40	3330	1123	**NMRV-P090**	90LA4	**NMRV-P090**	56C/143/145TC
44	2.5	2315	40	5903	1420	**NMRV-P110**	90LA4	**NMRV-P110**	143/145TC
35	1.2	2677	50	3145	1210	**NMRV-P090**	90LA4	**NMRV-P090**	56C/143/145TC
35	2.0	2785	50	5550	1529	**NMRV-P110**	90LA4	**NMRV-P110**	143/145TC
29	1.6	3255	60	5180	1625	**NMRV-P110**	90LA4	**NMRV-P110**	143/145TC

MOTOVARIO® HEART OF MOTION a TECO Group company

2.00 HP

Output speed RPM	Service factor sf	Output torque in-lbs	Exact ratio i	Max. torque in-lbs	OHL Output shaft lbs	Gearmotor		Gear Reducer	
						Reducer	Motor	Reducer	NEMA C-input
22	1.8	4001	80	7063	2339	**NMRV130**	90LA4	**NMRV130**	143/145TC
22	1.1	4018	80	4330	1789	**NMRV-P110**	90LA4	**NMRV-P110**	143/145TC
18	1.3	4711	100	6222	2520	**NMRV130**	90LA4	**NMRV130**	143/145TC

3.00 HP

Output speed RPM	Service factor sf	Output torque in-lbs	Exact ratio i	Max. torque in-lbs	OHL Output shaft lbs	Gearmotor		Gear Reducer	
						Reducer	Motor	Reducer	NEMA C-input
233	2.2	713	7.5	1555	581	**NMRV-P075**	100LA4	**NMRV-P075**	182/184TC
233	3.7	721	7.5	2682	643	**NMRV-P090**	100LA4	**NMRV-P090**	182/184TC
175	1.8	940	10	1656	640	**NMRV-P075**	100LA4	**NMRV-P075**	182/184TC
175	3.0	948	10	2867	708	**NMRV-P090**	100LA4	**NMRV-P090**	182/184TC
117	1.4	1378	15	1900	732	**NMRV-P075**	100LA4	**NMRV-P075**	182/184TC
117	2.4	1394	15	3330	810	**NMRV-P090**	100LA4	**NMRV-P090**	182/184TC
117	3.9	1398	15	5516	1024	**NMRV-P110**	100LA4	**NMRV-P110**	182/184TC
88	1.1	1778	20	1953	806	**NMRV-P075**	100LA4	**NMRV-P075**	182/184TC
88	1.8	1821	20	3288	892	**NMRV-P090**	100LA4	**NMRV-P090**	182/184TC
88	2.9	1842	20	5415	1127	**NMRV-P110**	100LA4	**NMRV-P110**	182/184TC
70	1.4	2223	25	3145	961	**NMRV-P090**	100LA4	**NMRV-P090**	182/184TC
70	3.5	2259	25	7819	1588	**NMRV130**	100LA4	**-**	-
70	2.5	2276	25	5709	1214	**NMRV-P110**	100LA4	**NMRV-P110**	182/184TC
58	1.4	2547	30	3632	1021	**NMRV-P090**	100LA4	**NMRV-P090**	182/184TC
58	2.4	2579	30	6096	1290	**NMRV-P110**	100LA4	**NMRV-P110**	182/184TC
58	3.4	2583	30	8745	1687	**NMRV130**	100LA4	**NMRV130**	182/184TC
58	3.8	2679	30	10090	2306	**-**	-	**NMRV150**	182/184TC
44	1.0	3268	40	3330	1123	**NMRV-P090**	100LA4	**NMRV-P090**	182/184TC
44	2.6	3359	40	8829	1857	**NMRV130**	100LA4	**NMRV130**	182/184TC
44	3.9	3359	40	13033	2538	**-**	-	**NMRV150**	182/184TC
44	1.7	3396	40	5903	1420	**NMRV-P110**	100LA4	**NMRV-P110**	182/184TC
35	2.0	4040	50	8240	2000	**NMRV130**	100LA4	**NMRV130**	182/184TC
35	1.4	4085	50	5550	1529	**NMRV-P110**	100LA4	**NMRV-P110**	182/184TC
35	2.9	4093	50	11772	2734	**NMRV150**	100LA4	**NMRV150**	182/184TC
29	1.6	4656	60	7567	2126	**NMRV130**	100LA4	**NMRV130**	182/184TC
29	2.2	4720	60	10594	2906	**NMRV150**	100LA4	**NMRV150**	182/184TC
29	1.1	4775	60	5180	1625	**NMRV-P110**	100LA4	**NMRV-P110**	182/184TC
22	1.2	5868	80	7063	2339	**NMRV130**	100LA4	**NMRV130**	182/184TC
22	1.6	5868	80	9670	3198	**NMRV150**	100LA4	**NMRV150**	182/184TC
18	1.2	6910	100	8409	3445	**NMRV150**	100LA4	**NMRV150**	182/184TC

5.00 HP

Output speed RPM	Service factor sf	Output torque in-lbs	Exact ratio i	Max. torque in-lbs	OHL Output shaft lbs	Gearmotor		Gear Reducer	
						Reducer	Motor	Reducer	NEMA C-input
233	1.2	1296	7.5	1555	581	**NMRV-P075**	112MA4	**NMRV-P075**	182/184TC
233	2.0	1311	7.5	2682	643	**NMRV-P090**	112MA4	**NMRV-P090**	182/184TC
233	3.5	1311	7.5	4641	813	**NMRV-P110**	112MA4	**NMRV-P110**	182/184TC
175	1.7	1724	10	2867	708	**NMRV-P090**	112MA4	**NMRV-P090**	182/184TC
175	2.9	1729	10	5029	894	**NMRV-P110**	112MA4	**NMRV-P110**	182/184TC
117	1.3	2535	15	3330	810	**NMRV-P090**	112MA4	**NMRV-P090**	182/184TC
117	2.2	2541	15	5516	1024	**NMRV-P110**	112MA4	**NMRV-P110**	182/184TC
88	1.6	3349	20	5415	1127	**NMRV-P110**	112MA4	**NMRV-P110**	182/184TC
70	1.9	4107	25	7819	1588	**NMRV130**	112MA4	**-**	-

5.00 HP

Output speed RPM	Service factor sf	Output torque in-lbs	Exact ratio i	Max. torque in-lbs	OHL Output shaft lbs	Gearmotor		Gear Reducer	
						Reducer	Motor	Reducer	NEMA C-input
70	1.4	4138	25	5709	1214	**NMRV-P110**	112MA4	**NMRV-P110**	182/184TC
58	1.3	4688	30	6096	1290	**NMRV-P110**	112MA4	**NMRV-P110**	182/184TC
58	1.9	4697	30	8745	1687	**NMRV130**	112MA4	**NMRV130**	182/184TC
58	2.1	4871	30	10090	2306	**-**	-	**NMRV150**	182/184TC
44	1.4	6108	40	8829	1857	**NMRV130**	112MA4	**NMRV130**	182/184TC
44	2.1	6108	40	13033	2538	**-**	-	**NMRV150**	182/184TC
35	1.1	7345	50	8240	2000	**NMRV130**	112MA4	**NMRV130**	182/184TC
35	1.6	7441	50	11772	2734	**NMRV150**	112MA4	**NMRV150**	182/184TC
29	1.2	8582	60	10594	2906	**NMRV150**	112MA4	**NMRV150**	182/184TC

7.50 HP

Output speed RPM	Service factor sf	Output torque in-lbs	Exact ratio i	Max. torque in-lbs	OHL Output shaft lbs	Gearmotor		Gear Reducer	
						Reducer	Motor	Reducer	NEMA C-input
233	2.6	1802	7.5	4641	813	**NMRV-P110**	132S4	**-**	-
233	3.5	1814	7.5	6306	1063	**NMRV130**	132S4	**NMRV130**	213/215TC
175	2.9	2365	10	6895	1170	**NMRV130**	132S4	**NMRV130**	213/215TC
175	2.1	2377	10	5029	894	**NMRV-P110**	132S4	**-**	-
117	2.2	3468	15	7735	1339	**NMRV130**	132S4	**NMRV130**	213/215TC
117	1.6	3494	15	5516	1024	**NMRV-P110**	132S4	**-**	-
117	3.0	3508	15	10510	1831	**-**	-	**NMRV150**	213/215TC
88	1.2	4605	20	5415	1127	**NMRV-P110**	132S4	**-**	-
88	1.7	4624	20	7651	1474	**NMRV130**	132S4	**NMRV130**	213/215TC
88	2.4	4624	20	10930	2015	**NMRV150**	132S4	**NMRV150**	213/215TC
70	1.4	5647	25	7819	1588	**NMRV130**	132S4	**NMRV130**	213/215TC
70	1.8	5647	25	10090	2170	**NMRV150**	132S4	**NMRV150**	213/215TC
70	1.0	5690	25	5709	1214	**NMRV-P110**	132S4	**-**	-
58	1.4	6458	30	8745	1687	**NMRV130**	132S4	**NMRV130**	213/215TC
58	1.5	6697	30	10090	2306	**NMRV150**	132S4	**NMRV150**	213/215TC
44	1.1	8398	40	8829	1857	**NMRV130**	132S4	**NMRV130**	213/215TC
44	1.6	8398	40	13033	2538	**NMRV150**	132S4	**NMRV150**	213/215TC
35	1.2	10232	50	11772	2734	**NMRV150**	132S4	**-**	-

10.00 HP

Output speed RPM	Service factor sf	Output torque in-lbs	Exact ratio i	Max. torque in-lbs	OHL Output shaft lbs	Gearmotor		Gear Reducer	
						Reducer	Motor	Reducer	NEMA C-input
233	1.9	2458	7.5	4641	813	**NMRV-P110**	132MA4	**-**	-
233	2.5	2473	7.5	6306	1063	**NMRV130**	132MA4	**NMRV130**	213/215TC
175	2.1	3225	10	6895	1170	**NMRV130**	132MA4	**NMRV130**	213/215TC
175	1.6	3241	10	5029	894	**NMRV-P110**	132MA4	**-**	-
117	1.6	4729	15	7735	1339	**NMRV130**	132MA4	**NMRV130**	213/215TC
117	1.2	4764	15	5516	1024	**NMRV-P110**	132MA4	**-**	-
117	2.2	4784	15	10510	1831	**-**	-	**NMRV150**	213/215TC
88	1.2	6306	20	7651	1474	**NMRV130**	132MA4	**NMRV130**	213/215TC
88	1.7	6306	20	10930	2015	**NMRV150**	132MA4	**NMRV150**	213/215TC
70	1.0	7701	25	7819	1588	**NMRV130**	132MA4	**NMRV130**	213/215TC
70	1.3	7701	25	10090	2170	**NMRV150**	132MA4	**NMRV150**	213/215TC
58	1.1	9133	30	10090	2306	**NMRV150**	132MA4	**NMRV150**	213/215TC
44	1.1	11452	40	13033	2538	**NMRV150**	132MA4	**NMRV150**	213/215TC

15.00 HP

Output speed RPM	Service factor sf	Output torque in-lbs	Exact ratio i	Max. torque in-lbs	OHL Output shaft lbs	Gearmotor		Gear Reducer	
						Reducer	Motor	Reducer	NEMA C-input
233	1.3	3605	7.5	4641	813	**NMRV-P110**	132MC4	**-**	-
233	1.7	3628	7.5	6306	1063	**NMRV130**	132MC4	**-**	-
233	2.8	3628	7.5	10090	1453	**NMRV150**	160S4	**NMRV150**	254/256TC
175	1.5	4731	10	6895	1170	**NMRV130**	132MC4	**-**	-
175	1.1	4753	10	5029	894	**NMRV-P110**	132MC4	**-**	-
175	2.2	4784	10	10426	1599	**NMRV150**	160S4	**NMRV150**	254/256TC
117	1.1	6936	15	7735	1339	**NMRV130**	132MC4	**-**	-
117	1.5	7016	15	10510	1831	**NMRV150**	160S4	**NMRV150**	254/256TC
88	1.2	9249	20	10930	2015	**NMRV150**	132MC4/160S4	**NMRV150**	254/256TC

20.00 HP

Output speed RPM	Service factor sf	Output torque in-lbs	Exact ratio i	Max. torque in-lbs	OHL Output shaft lbs	Gearmotor		Gear Reducer	
						Reducer	Motor	Reducer	NEMA C-input
233	2.0	4947	7.5	10090	1453	**NMRV150**	160L4	**NMRV150**	254/256TC
175	1.6	6523	10	10426	1599	**NMRV150**	160L4	**NMRV150**	254/256TC
117	1.1	9568	15	10510	1831	**NMRV150**	160L4	**NMRV150**	254/256TC

Worm Gear Reducer Ratings - Input Speed 875 rpm

Maximum Torque in-lbs	Output Speed RPM	Exact Ratio i	Maximum Power HP	OHL		Gear Reducer	
				Output Shaft lbs	Input Shaft lbs	Motorized Input	Shaft Input
115	175	5	0.38	115	-	NMRV025	-
115	117	7.5	0.25	132	-	NMRV025	-
124	88	10	0.21	146	-	NMRV025	-
124	58	15	0.15	167	-	NMRV025	-
115	44	20	0.11	183	-	NMRV025	-
133	29	30	0.09	210	-	NMRV025	-
124	22	40	0.07	231	-	NMRV025	-
115	18	50	0.06	249	-	NMRV025	-
97	15	60	0.04	264	-	NMRV025	-
186	175	5	0.61	157	47	NMRV030	NRV030
186	117	7.5	0.41	180	47	NMRV030	NRV030
186	88	10	0.32	198	47	NMRV030	NRV030
186	58	15	0.23	226	47	NMRV030	NRV030
177	44	20	0.17	249	47	NMRV030	NRV030
212	35	25	0.18	268	47	NMRV030	NRV030
195	29	30	0.15	285	47	NMRV030	NRV030
186	22	40	0.12	314	47	NMRV030	NRV030
168	18	50	0.09	338	47	NMRV030	NRV030
150	15	60	0.07	359	47	NMRV030	NRV030
133	11	80	0.05	395	47	NMRV030	NRV030
372	175	5	1.19	302	79	NMRV040	NRV040
407	117	7.5	0.89	346	79	NMRV040	NRV040
425	88	10	0.71	381	79	NMRV040	NRV040
442	58	15	0.52	436	79	NMRV040	NRV040
425	44	20	0.39	479	79	NMRV040	NRV040
398	35	25	0.3	517	79	NMRV040	NRV040
469	29	30	0.32	549	79	NMRV040	NRV040
442	22	40	0.24	604	79	NMRV040	NRV040
407	18	50	0.19	651	79	NMRV040	NRV040
363	15	60	0.15	692	79	NMRV040	NRV040
310	11	80	0.11	761	79	NMRV040	NRV040
283	8.8	100	0.09	785	79	NMRV040	NRV040
726	175	5	2.29	415	110	NMRV050	NRV050
805	117	7.5	1.73	475	110	NMRV050	NRV050
814	88	10	1.33	522	110	NMRV050	NRV050
814	58	15	0.94	598	110	NMRV050	NRV050
734	44	20	0.66	658	110	NMRV050	NRV050
672	35	25	0.5	709	110	NMRV050	NRV050
832	29	30	0.56	753	110	NMRV050	NRV050
779	22	40	0.42	829	110	NMRV050	NRV050
717	18	50	0.33	893	110	NMRV050	NRV050
672	15	60	0.28	949	110	NMRV050	NRV050
602	11	80	0.21	1045	110	NMRV050	NRV050
495	8.8	100	0.15	1088	110	NMRV050	NRV050
1336	117	7.5	2.81	620	157	NMRV-P063	NRV-P063
1354	88	10	2.21	683	157	NMRV-P063	NRV-P063
1470	58	15	1.66	782	157	NMRV-P063	NRV-P063
1398	44	20	1.24	860	157	NMRV-P063	NRV-P063
1292	35	25	0.94	927	157	NMRV-P063	NRV-P063
1572	29	30	1.02	985	157	NMRV-P063	NRV-P063
1478	22	40	0.78	1084	157	NMRV-P063	NRV-P063
1385	18	50	0.62	1168	157	NMRV-P063	NRV-P063
1319	15	60	0.52	1241	157	NMRV-P063	NRV-P063
1182	11	80	0.39	1366	157	NMRV-P063	NRV-P063
1097	8.8	100	0.32	1410	157	NMRV-P063	NRV-P063

Maximum Torque in-lbs	Output Speed RPM	Exact Ratio i	Maximum Power HP	OHL		Gear Reducer	
				Output Shaft lbs	Input Shaft lbs	Motorized Input	Shaft Input
1903	117	7.5	4.00	732	220	NMRV-P075	NRV-P075
2036	88	10	3.32	806	220	NMRV-P075	NRV-P075
2263	58	15	2.55	923	220	NMRV-P075	NRV-P075
2263	44	20	2.01	1015	220	NMRV-P075	NRV-P075
2131	35	25	1.56	1094	220	NMRV-P075	NRV-P075
2543	29	30	1.66	1162	220	NMRV-P075	NRV-P075
2453	22	40	1.29	1279	220	NMRV-P075	NRV-P075
2255	18	50	1.01	1378	220	NMRV-P075	NRV-P075
2184	15	60	0.86	1464	220	NMRV-P075	NRV-P075
1949	11	80	0.64	1612	220	NMRV-P075	NRV-P075
1735	8.8	100	0.5	1659	220	NMRV-P075	NRV-P075
3310	117	7.5	6.88	810	286	NMRV-P090	NRV-P090
3602	88	10	5.75	892	286	NMRV-P090	NRV-P090
4089	58	15	4.45	1021	286	NMRV-P090	NRV-P090
3797	44	20	3.21	1123	286	NMRV-P090	NRV-P090
3602	35	25	2.5	1210	286	NMRV-P090	NRV-P090
4293	29	30	2.61	1286	286	NMRV-P090	NRV-P090
3992	22	40	1.92	1416	286	NMRV-P090	NRV-P090
3797	18	50	1.53	1525	286	NMRV-P090	NRV-P090
3408	15	60	1.21	1620	286	NMRV-P090	NRV-P090
2788	11	80	0.81	1783	286	NMRV-P090	NRV-P090
2478	8.8	100	0.63	1839	286	NMRV-P090	NRV-P090
5753	117	7.5	11.96	1024	382	NMRV-P110	NRV-P110
6311	88	10	9.96	1127	382	NMRV-P110	NRV-P110
6718	58	15	7.23	1290	382	NMRV-P110	NRV-P110
6417	44	20	5.3	1420	382	NMRV-P110	NRV-P110
6718	35	25	4.55	1529	382	NMRV-P110	NRV-P110
7434	29	30	4.47	1625	382	NMRV-P110	NRV-P110
7027	22	40	3.25	1789	382	NMRV-P110	NRV-P110
6620	18	50	2.55	1927	382	NMRV-P110	NRV-P110
6036	15	60	2.02	2047	382	NMRV-P110	NRV-P110
5019	11	80	1.36	2254	382	NMRV-P110	NRV-P110
4558	8.8	100	1.07	2320	382	NMRV-P110	NRV-P110
7788	117	7.5	17.58	1339	472	NMRV130	NRV130
8497	88	10	14.56	1474	472	NMRV130	NRV130
9382	58	15	11.42	1687	472	NMRV130	NRV130
9205	44	20	8.52	1857	472	NMRV130	NRV130
9293	35	25	7.07	2000	472	NMRV130	NRV130
10355	29	30	7.26	2126	472	NMRV130	NRV130
9736	22	40	5.36	2339	472	NMRV130	NRV130
9293	18	50	4.3	2520	472	NMRV130	NRV130
8320	15	60	3.44	2678	472	NMRV130	NRV130
7611	11	80	2.59	2948	472	NMRV130	NRV130
6903	8.8	100	2.04	3035	472	NMRV130	NRV130
20357	117	7.5	45.95	1831	629	NMRV150	NRV150
20799	88	10	35.65	2015	629	NMRV150	NRV150
20003	58	15	23.73	2306	629	NMRV150	NRV150
20710	44	20	19.17	2538	629	NMRV150	NRV150
18144	35	25	13.8	2734	629	NMRV150	NRV150
18587	29	30	12.11	2906	629	NMRV150	NRV150
23631	22	40	12.81	3198	629	NMRV150	NRV150
20622	18	50	9.54	3445	629	NMRV150	NRV150
18410	15	60	7.47	3661	629	NMRV150	NRV150
16639	11	80	5.66	4030	629	NMRV150	NRV150
14603	8.8	100	4.31	4047	629	NMRV150	NRV150

Worm Gear Reducer Ratings - Input Speed 1140 rpm

Maximum Torque in-lbs	Output Speed RPM	Exact Ratio i	Maximum Power HP	OHL		Gear Reducer	
				Output Shaft lbs	Input Shaft lbs	Motorized Input	Shaft Input
106	228	5	0.45	106	-	NMRV025	-
106	152	7.5	0.30	121	-	NMRV025	-
115	114	10	0.25	133	-	NMRV025	-
115	76	15	0.18	153	-	NMRV025	-
111	57	20	0.14	168	-	NMRV025	-
124	38	30	0.11	192	-	NMRV025	-
119	29	40	0.09	211	-	NMRV025	-
106	23	50	0.07	228	-	NMRV025	-
93	19	60	0.05	242	-	NMRV025	-
177	228	5	0.74	144	39	NMRV030	NRV030
177	152	7.5	0.51	164	39	NMRV030	NRV030
177	114	10	0.39	181	44	NMRV030	NRV030
177	76	15	0.28	207	44	NMRV030	NRV030
168	57	20	0.21	228	47	NMRV030	NRV030
204	46	25	0.22	246	47	NMRV030	NRV030
190	38	30	0.18	261	47	NMRV030	NRV030
177	29	40	0.14	287	47	NMRV030	NRV030
164	23	50	0.11	310	47	NMRV030	NRV030
146	19	60	0.09	329	47	NMRV030	NRV030
124	14	80	0.06	362	47	NMRV030	NRV030
345	228	5	1.42	277	65	NMRV040	NRV040
389	152	7.5	1.09	317	74	NMRV040	NRV040
407	114	10	0.88	348	79	NMRV040	NRV040
416	76	15	0.62	399	79	NMRV040	NRV040
403	57	20	0.47	439	79	NMRV040	NRV040
372	46	25	0.36	473	79	NMRV040	NRV040
447	38	30	0.39	503	79	NMRV040	NRV040
420	29	40	0.29	553	79	NMRV040	NRV040
389	23	50	0.23	596	79	NMRV040	NRV040
354	19	60	0.19	633	79	NMRV040	NRV040
301	14	80	0.13	697	79	NMRV040	NRV040
270	11	100	0.11	751	79	NMRV040	NRV040
664	228	5	2.70	380	90	NMRV050	NRV050
743	152	7.5	2.06	435	101	NMRV050	NRV050
757	114	10	1.59	478	110	NMRV050	NRV050
765	76	15	1.13	547	110	NMRV050	NRV050
712	57	20	0.82	603	110	NMRV050	NRV050
650	46	25	0.62	649	110	NMRV050	NRV050
805	38	30	0.68	690	110	NMRV050	NRV050
752	29	40	0.52	759	110	NMRV050	NRV050
699	23	50	0.41	818	110	NMRV050	NRV050
655	19	60	0.34	869	110	NMRV050	NRV050
588	14	80	0.26	957	110	NMRV050	NRV050
491	11	100	0.19	1030	110	NMRV050	NRV050
1234	152	7.5	3.36	568	130	NMRV-P063	NRV-P063
1262	114	10	2.65	625	150	NMRV-P063	NRV-P063
1408	76	15	2.04	716	157	NMRV-P063	NRV-P063
1363	57	20	1.53	788	157	NMRV-P063	NRV-P063
1249	46	25	1.16	848	157	NMRV-P063	NRV-P063
1486	38	30	1.22	902	157	NMRV-P063	NRV-P063
1413	29	40	0.93	992	157	NMRV-P063	NRV-P063
1342	23	50	0.75	1069	157	NMRV-P063	NRV-P063
1271	19	60	0.62	1136	157	NMRV-P063	NRV-P063
1145	14	80	0.46	1250	157	NMRV-P063	NRV-P063
1071	11	100	0.38	1347	157	NMRV-P063	NRV-P063

Maximum Torque in-lbs	Output Speed RPM	Exact Ratio i	Maximum Power HP	OHL		Gear Reducer	
				Output Shaft lbs	Input Shaft lbs	Motorized Input	Shaft Input
1771	152	7.5	4.82	670	182	NMRV-P075	NRV-P075
1881	114	10	3.92	738	218	NMRV-P075	NRV-P075
2213	76	15	3.16	845	220	NMRV-P075	NRV-P075
2212	57	20	2.47	930	220	NMRV-P075	NRV-P075
2014	46	25	1.84	1001	220	NMRV-P075	NRV-P075
2340	38	30	1.89	1064	220	NMRV-P075	NRV-P075
2315	29	40	1.49	1171	220	NMRV-P075	NRV-P075
2123	23	50	1.15	1262	220	NMRV-P075	NRV-P075
2040	19	60	0.97	1341	220	NMRV-P075	NRV-P075
1835	14	80	0.72	1476	220	NMRV-P075	NRV-P075
1664	11	100	0.57	1590	220	NMRV-P075	NRV-P075
3067	152	7.5	8.25	742	234	NMRV-P090	NRV-P090
3310	114	10	6.79	816	286	NMRV-P090	NRV-P090
3797	76	15	5.31	935	286	NMRV-P090	NRV-P090
3629	57	20	3.92	1029	286	NMRV-P090	NRV-P090
3456	46	25	3.06	1108	286	NMRV-P090	NRV-P090
4058	38	30	3.14	1178	286	NMRV-P090	NRV-P090
3748	29	40	2.28	1296	286	NMRV-P090	NRV-P090
3554	23	50	1.80	1396	286	NMRV-P090	NRV-P090
3262	19	60	1.45	1484	286	NMRV-P090	NRV-P090
2655	14	80	0.96	1633	286	NMRV-P090	NRV-P090
2434	11	100	0.76	1759	286	NMRV-P090	NRV-P090
5320	152	7.5	14.32	937	312	NMRV-P110	NRV-P110
5802	114	10	11.84	1032	382	NMRV-P110	NRV-P110
6262	76	15	8.72	1181	382	NMRV-P110	NRV-P110
6059	57	20	6.43	1300	382	NMRV-P110	NRV-P110
6364	46	25	5.49	1400	382	NMRV-P110	NRV-P110
6926	38	30	5.30	1488	382	NMRV-P110	NRV-P110
6620	29	40	3.87	1638	382	NMRV-P110	NRV-P110
6231	23	50	3.03	1764	382	NMRV-P110	NRV-P110
5744	19	60	2.40	1875	382	NMRV-P110	NRV-P110
4788	14	80	1.63	2063	382	NMRV-P110	NRV-P110
4416	11	100	1.29	2223	382	NMRV-P110	NRV-P110
7213	152	7.5	19.33	1226	391	NMRV130	NRV130
7877	114	10	16.19	1349	472	NMRV130	NRV130
8763	76	15	12.43	1545	472	NMRV130	NRV130
8630	57	20	9.18	1700	472	NMRV130	NRV130
8763	46	25	7.64	1831	472	NMRV130	NRV130
9780	38	30	7.46	1946	472	NMRV130	NRV130
9515	29	40	5.66	2142	472	NMRV130	NRV130
8984	23	50	4.45	2307	472	NMRV130	NRV130
8142	19	60	3.51	2452	472	NMRV130	NRV130
7523	14	80	2.62	2699	472	NMRV130	NRV130
6727	11	100	2.03	2907	472	NMRV130	NRV130
12391	152	7.5	33.20	1676	510	NMRV150	NRV150
13099	114	10	26.62	1845	607	NMRV150	NRV150
12834	76	15	17.79	2112	595	NMRV150	NRV150
13276	57	20	14.12	2324	629	NMRV150	NRV150
12214	46	25	10.52	2504	629	NMRV150	NRV150
12391	38	30	9.11	2661	629	NMRV150	NRV150
15932	29	40	9.48	2928	629	NMRV150	NRV150
14161	23	50	6.92	3154	629	NMRV150	NRV150
12745	19	60	5.41	3352	629	NMRV150	NRV150
11505	14	80	3.94	3689	629	NMRV150	NRV150
10178	11	100	3.02	3974	629	NMRV150	NRV150

Worm Gear Reducer Ratings - Input Speed 1750 rpm

Maximum Torque in-lbs	Output Speed RPM	Exact Ratio i	Maximum Power HP	OHL		Gear Reducer	
				Output Shaft lbs	Input Shaft lbs	Motorized Input	Shaft Input
92	350	5	0.59	92	-	NMRV025	-
92	233	7.5	0.40	105	-	NMRV025	-
101	175	10	0.34	115	-	NMRV025	-
101	117	15	0.24	132	-	NMRV025	-
101	88	20	0.19	146	-	NMRV025	-
109	58	30	0.15	167	-	NMRV025	-
109	44	40	0.12	183	-	NMRV025	-
92	35	50	0.09	197	-	NMRV025	-
84	29	60	0.07	210	-	NMRV025	-
160	350	5	1.02	125	34	NMRV030	NRV030
160	233	7.5	0.70	143	34	NMRV030	NRV030
160	175	10	0.54	157	38	NMRV030	NRV030
160	117	15	0.38	180	38	NMRV030	NRV030
151	88	20	0.28	198	40	NMRV030	NRV030
185	70	25	0.30	213	47	NMRV030	NRV030
177	58	30	0.25	226	47	NMRV030	NRV030
160	44	40	0.19	249	47	NMRV030	NRV030
151	35	50	0.15	268	47	NMRV030	NRV030
134	29	60	0.12	285	47	NMRV030	NRV030
109	22	80	0.08	314	47	NMRV030	NRV030
303	350	5	1.89	240	56	NMRV040	NRV040
353	233	7.5	1.50	274	65	NMRV040	NRV040
370	175	10	1.21	302	77	NMRV040	NRV040
370	117	15	0.83	346	77	NMRV040	NRV040
361	88	20	0.63	381	79	NMRV040	NRV040
328	70	25	0.48	410	79	NMRV040	NRV040
403	58	30	0.53	436	79	NMRV040	NRV040
378	44	40	0.40	479	79	NMRV040	NRV040
353	35	50	0.31	517	79	NMRV040	NRV040
319	29	60	0.25	549	79	NMRV040	NRV040
277	22	80	0.18	604	79	NMRV040	NRV040
244	18	100	0.14	651	79	NMRV040	NRV040
572	350	5	3.57	329	79	NMRV050	NRV050
647	233	7.5	2.72	377	89	NMRV050	NRV050
664	175	10	2.12	415	110	NMRV050	NRV050
681	117	15	1.52	475	110	NMRV050	NRV050
656	88	20	1.14	522	110	NMRV050	NRV050
597	70	25	0.86	563	110	NMRV050	NRV050
740	58	30	0.94	598	110	NMRV050	NRV050
689	44	40	0.70	658	110	NMRV050	NRV050
647	35	50	0.56	709	110	NMRV050	NRV050
605	29	60	0.47	753	110	NMRV050	NRV050
546	22	80	0.35	829	110	NMRV050	NRV050
462	18	100	0.26	893	110	NMRV050	NRV050
1076	233	7.5	4.46	492	112	NMRV-P063	NRV-P063
1108	175	10	3.52	542	130	NMRV-P063	NRV-P063
1236	117	15	2.70	620	145	NMRV-P063	NRV-P063
1225	88	20	2.06	683	157	NMRV-P063	NRV-P063
1124	70	25	1.56	736	157	NMRV-P063	NRV-P063
1345	58	30	1.64	782	157	NMRV-P063	NRV-P063
1261	44	40	1.21	860	157	NMRV-P063	NRV-P063
1208	35	50	0.99	927	157	NMRV-P063	NRV-P063
1135	29	60	0.82	985	157	NMRV-P063	NRV-P063
1027	22	80	0.60	1084	157	NMRV-P063	NRV-P063
992	18	100	0.51	1168	157	NMRV-P063	NRV-P063

Maximum Torque in-lbs	Output Speed RPM	Exact Ratio i	Maximum Power HP	OHL		Gear Reducer	
				Output Shaft lbs	Input Shaft lbs	Motorized Input	Shaft Input
1555	233	7.5	6.44	581	157	NMRV-P075	NRV-P075
1656	175	10	5.20	640	189	NMRV-P075	NRV-P075
1900	117	15	4.07	732	216	NMRV-P075	NRV-P075
1953	88	20	3.24	806	220	NMRV-P075	NRV-P075
1784	70	25	2.43	868	220	NMRV-P075	NRV-P075
2028	58	30	2.41	923	220	NMRV-P075	NRV-P075
2029	44	40	1.90	1015	220	NMRV-P075	NRV-P075
1881	35	50	1.47	1094	220	NMRV-P075	NRV-P075
1778	29	60	1.22	1162	220	NMRV-P075	NRV-P075
1632	22	80	0.91	1279	220	NMRV-P075	NRV-P075
1517	18	100	0.74	1378	220	NMRV-P075	NRV-P075
2682	233	7.5	10.98	643	202	NMRV-P090	NRV-P090
2867	175	10	8.92	708	243	NMRV-P090	NRV-P090
3330	117	15	7.05	810	283	NMRV-P090	NRV-P090
3288	88	20	5.33	892	286	NMRV-P090	NRV-P090
3145	70	25	4.18	961	286	NMRV-P090	NRV-P090
3632	58	30	4.21	1021	286	NMRV-P090	NRV-P090
3330	44	40	3.01	1123	286	NMRV-P090	NRV-P090
3145	35	50	2.36	1210	286	NMRV-P090	NRV-P090
2960	29	60	1.93	1286	286	NMRV-P090	NRV-P090
2397	22	80	1.27	1416	286	NMRV-P090	NRV-P090
2271	18	100	1.03	1525	286	NMRV-P090	NRV-P090
4641	233	7.5	19.00	813	270	NMRV-P110	NRV-P110
5029	175	10	15.61	894	329	NMRV-P110	NRV-P110
5516	117	15	11.65	1024	361	NMRV-P110	NRV-P110
5415	88	20	8.68	1127	382	NMRV-P110	NRV-P110
5709	70	25	7.40	1214	382	NMRV-P110	NRV-P110
6096	58	30	6.98	1290	382	NMRV-P110	NRV-P110
5903	44	40	5.13	1420	382	NMRV-P110	NRV-P110
5550	35	50	4.01	1529	382	NMRV-P110	NRV-P110
5180	29	60	3.20	1625	382	NMRV-P110	NRV-P110
4330	22	80	2.17	1789	382	NMRV-P110	NRV-P110
4061	18	100	1.73	1927	382	NMRV-P110	NRV-P110
6306	233	7.5	25.65	1063	337	NMRV130	NRV130
6895	175	10	21.51	1170	415	NMRV130	NRV130
7735	117	15	16.46	1339	465	NMRV130	NRV130
7651	88	20	12.21	1474	472	NMRV130	NRV130
7819	70	25	10.22	1588	472	NMRV130	NRV130
8745	58	30	9.99	1687	472	NMRV130	NRV130
8829	44	40	7.76	1857	472	NMRV130	NRV130
8240	35	50	6.02	2000	472	NMRV130	NRV130
7567	29	60	4.80	2126	472	NMRV130	NRV130
7063	22	80	3.55	2339	472	NMRV130	NRV130
6222	18	100	2.66	2520	472	NMRV130	NRV130
10090	233	7.5	41.05	1453	438	NMRV150	NRV150
10426	175	10	32.16	1599	510	NMRV150	NRV150
10510	117	15	22.11	1831	514	NMRV150	NRV150
10930	88	20	17.44	2015	601	NMRV150	NRV150
10090	70	25	13.18	2170	629	NMRV150	NRV150
10090	58	30	11.12	2306	629	NMRV150	NRV150
13033	44	40	11.45	2538	629	NMRV150	NRV150
11772	35	50	8.49	2734	629	NMRV150	NRV150
10594	29	60	6.62	2906	629	NMRV150	NRV150
9670	22	80	4.86	3198	629	NMRV150	NRV150
8409	18	100	3.59	3445	629	NMRV150	NRV150

Worm Gear Reducer Ratings - Input Speed 3500 rpm

Maximum Torque in-lbs	Output Speed RPM	Exact Ratio i	Maximum Power HP	OHL		Gear Reducer	
				Output Shaft lbs	Input Shaft lbs	Motorized Input	Shaft Input
67	700	5	0.84	73	-	NMRV025	-
67	467	7.5	0.57	83	-	NMRV025	-
76	350	10	0.49	92	-	NMRV025	-
76	233	15	0.34	105	-	NMRV025	-
76	175	20	0.27	115	-	NMRV025	-
76	117	30	0.19	132	-	NMRV025	-
76	88	40	0.15	146	-	NMRV025	-
76	70	50	0.13	157	-	NMRV025	-
67	58	60	0.10	167	-	NMRV025	-
101	700	5	1.26	99	26	NMRV030	NRV030
109	467	7.5	0.93	113	28	NMRV030	NRV030
109	350	10	0.70	125	31	NMRV030	NRV030
109	233	15	0.49	143	31	NMRV030	NRV030
101	175	20	0.36	157	33	NMRV030	NRV030
134	140	25	0.40	169	47	NMRV030	NRV030
126	117	30	0.32	180	47	NMRV030	NRV030
118	88	40	0.24	198	29	NMRV030	NRV030
109	70	50	0.19	213	29	NMRV030	NRV030
101	58	60	0.16	226	28	NMRV030	NRV030
92	44	80	0.12	249	29	NMRV030	NRV030
202	700	5	2.49	190	45	NMRV040	NRV040
235	467	7.5	1.96	218	52	NMRV040	NRV040
244	350	10	1.54	240	61	NMRV040	NRV040
261	233	15	1.14	274	65	NMRV040	NRV040
244	175	20	0.82	302	46	NMRV040	NRV040
235	140	25	0.65	325	53	NMRV040	NRV040
286	117	30	0.69	346	79	NMRV040	NRV040
261	88	40	0.50	381	79	NMRV040	NRV040
252	70	50	0.41	410	79	NMRV040	NRV040
235	58	60	0.33	436	79	NMRV040	NRV040
210	44	80	0.24	479	79	NMRV040	NRV040
193	35	100	0.19	517	79	NMRV040	NRV040
378	700	5	4.61	261	63	NMRV050	NRV050
437	467	7.5	3.60	299	73	NMRV050	NRV050
454	350	10	2.83	329	85	NMRV050	NRV050
479	233	15	2.06	377	90	NMRV050	NRV050
446	175	20	1.49	415	94	NMRV050	NRV050
429	140	25	1.18	447	108	NMRV050	NRV050
538	117	30	1.29	475	110	NMRV050	NRV050
496	88	40	0.93	522	110	NMRV050	NRV050
446	70	50	0.71	563	110	NMRV050	NRV050
420	58	60	0.58	598	110	NMRV050	NRV050
378	44	80	0.42	658	110	NMRV050	NRV050
336	35	100	0.33	709	110	NMRV050	NRV050
793	467	7.5	6.39	391	89	NMRV-P063	NRV-P063
838	350	10	5.11	430	106	NMRV-P063	NRV-P063
885	233	15	3.68	492	111	NMRV-P063	NRV-P063
841	175	20	2.68	542	119	NMRV-P063	NRV-P063
774	140	25	2.02	584	132	NMRV-P063	NRV-P063
1009	117	30	2.28	620	157	NMRV-P063	NRV-P063
922	88	40	1.62	683	157	NMRV-P063	NRV-P063
849	70	50	1.26	736	157	NMRV-P063	NRV-P063
803	58	60	1.03	782	157	NMRV-P063	NRV-P063
714	44	80	0.74	860	157	NMRV-P063	NRV-P063
641	35	100	0.58	927	157	NMRV-P063	NRV-P063

Maximum Torque in-lbs	Output Speed RPM	Exact Ratio i	Maximum Power HP	OHL		Gear Reducer	
				Output Shaft lbs	Input Shaft lbs	Motorized Input	Shaft Input
1131	467	7.5	9.10	461	126	NMRV-P075	NRV-P075
1283	350	10	7.83	508	161	NMRV-P075	NRV-P075
1349	233	15	5.61	581	169	NMRV-P075	NRV-P075
1357	175	20	4.31	640	191	NMRV-P075	NRV-P075
1261	140	25	3.26	689	220	NMRV-P075	NRV-P075
1524	117	30	3.40	732	220	NMRV-P075	NRV-P075
1457	88	40	2.53	806	220	NMRV-P075	NRV-P075
1315	70	50	1.88	868	220	NMRV-P075	NRV-P075
1260	58	60	1.57	923	220	NMRV-P075	NRV-P075
1118	44	80	1.12	1015	220	NMRV-P075	NRV-P075
1038	35	100	0.89	1094	220	NMRV-P075	NRV-P075
1766	467	7.5	14.06	510	161	NMRV-P090	NRV-P090
1976	350	10	11.92	562	202	NMRV-P090	NRV-P090
2271	233	15	9.24	643	233	NMRV-P090	NRV-P090
2186	175	20	6.74	708	252	NMRV-P090	NRV-P090
2102	140	25	5.30	762	286	NMRV-P090	NRV-P090
2607	117	30	5.68	810	286	NMRV-P090	NRV-P090
2313	88	40	3.87	892	286	NMRV-P090	NRV-P090
2229	70	50	3.09	961	286	NMRV-P090	NRV-P090
2060	58	60	2.44	1021	286	NMRV-P090	NRV-P090
1892	44	80	1.82	1123	286	NMRV-P090	NRV-P090
1682	35	100	1.35	1210	286	NMRV-P090	NRV-P090
3288	467	7.5	26.18	645	214	NMRV-P110	NRV-P110
3674	350	10	22.18	710	268	NMRV-P110	NRV-P110
4111	233	15	16.72	813	300	NMRV-P110	NRV-P110
4061	175	20	12.53	894	334	NMRV-P110	NRV-P110
4254	140	25	10.50	963	382	NMRV-P110	NRV-P110
4641	117	30	9.87	1024	382	NMRV-P110	NRV-P110
4448	88	40	7.18	1127	382	NMRV-P110	NRV-P110
4162	70	50	5.57	1214	382	NMRV-P110	NRV-P110
3977	58	60	4.49	1290	382	NMRV-P110	NRV-P110
3355	44	80	2.71	1420	382	NMRV-P110	NRV-P110
3094	35	100	2.35	1529	382	NMRV-P110	NRV-P110
4372	467	7.5	35.19	844	268	NMRV130	NRV130
4876	350	10	29.76	928	336	NMRV130	NRV130
5634	233	15	23.43	1063	388	NMRV130	NRV130
5550	175	20	17.31	1170	430	NMRV130	NRV130
5634	140	25	14.22	1260	472	NMRV130	NRV130
6474	117	30	14.10	1339	472	NMRV130	NRV130
6138	88	40	10.27	1474	472	NMRV130	NRV130
5886	70	50	8.07	1588	472	NMRV130	NRV130
5382	58	60	6.30	1687	472	NMRV130	NRV130
4960	44	80	4.65	1857	472	NMRV130	NRV130
4372	35	100	3.42	2000	472	NMRV130	NRV130
7063	467	7.5	56.84	1153	348	NMRV150	NRV150
7483	350	10	45.17	1269	415	NMRV150	NRV150
7651	233	15	31.47	1453	425	NMRV150	NRV150
8240	175	20	25.42	1599	515	NMRV150	NRV150
7483	140	25	18.89	1723	561	NMRV150	NRV150
7735	117	30	16.46	1831	629	NMRV150	NRV150
10090	88	40	16.68	2015	629	NMRV150	NRV150
9249	70	50	12.68	2170	629	NMRV150	NRV150
8325	58	60	9.75	2306	629	NMRV150	NRV150
7735	44	80	7.16	2538	629	NMRV150	NRV150
6811	35	100	5.25	2734	629	NMRV150	NRV150

Helical Worm Gearmotor Ratings - Motor Speed 1750 rpm

0.08 HP

Maximum Power HP	Output Speed RPM	Service Factor sf	Output Torque in-lbs	Ratio Stage 1	Ratio Stage 2	Exact Ratio i	Max. Torque in-lbs	OHL Output Shaft lbs	Gearmotor		Gear Reducer	
									Reducer	Motor	Reducer	NEMA C-face
0.94	21	11.8	174	5.45	15	81.82	2053	1092	**HW030+NMRV-P063**	56A4	-	-
0.85	20	10.6	168	2.94	30	88.33	1778	1120	**HW030+NMRV-P063**	56A4	-	-
0.76	16	9.5	221	5.45	20	109.09	2099	1202	**HW030+NMRV-P063**	56A4	-	-
0.75	15	9.4	247	7.88	15	118.13	2320	1234	**HW030+NMRV-P063**	56A4	-	-
0.58	13	7.2	265	5.45	25	136.36	1913	1295	**HW030+NMRV-P063**	56A4	-	-
0.59	11	7.4	312	7.88	20	157.50	2308	1358	**HW030+NMRV-P063**	56A4	-	-
0.60	11	7.5	290	5.45	30	163.64	2184	1376	**HW030+NMRV-P063**	56A4	-	-
0.43	9.9	5.4	278	2.94	60	176.67	1490	1410	**HW030+NMRV-P063**	56A4	-	-
0.45	8.9	5.6	373	7.88	25	196.88	2098	1410	**HW030+NMRV-P063**	56A4	-	-
0.47	8.0	5.9	358	5.45	40	218.18	2115	1410	**HW030+NMRV-P063**	56A4	-	-
0.48	7.4	6.1	408	7.88	30	236.25	2468	1410	**HW030+NMRV-P063**	56A4	-	-
0.38	6.4	4.7	414	5.45	50	272.73	1959	1410	**HW030+NMRV-P063**	56A4	-	-
0.37	5.6	4.6	500	7.88	40	315.00	2299	1410	**HW030+NMRV-P063**	56A4	-	-
0.61	5.6	7.6	500	7.88	40	315.00	3798	1659	**HW030+NMRV-P075**	56A4	-	-
0.29	4.4	3.6	580	7.88	50	393.75	2089	1410	**HW030+NMRV-P063**	56A4	-	-
0.47	4.4	5.9	580	7.88	50	393.75	3416	1659	**HW030+NMRV-P075**	56A4	-	-
0.28	4.0	3.6	673	10.83	40	433.33	2392	1410	**HW030+NMRV-P063**	56A4	-	-
0.24	3.7	2.9	644	7.88	60	472.50	1896	1410	**HW030+NMRV-P063**	56A4	-	-
0.40	3.7	5.0	644	7.88	60	472.50	3239	1659	**HW030+NMRV-P075**	56A4	-	-
0.22	3.2	2.8	782	10.83	50	541.67	2167	1410	**HW030+NMRV-P063**	56A4	-	-
0.31	3.2	3.9	782	10.83	50	541.67	3062	1659	**HW030+NMRV-P075**	56A4	-	-
0.18	2.7	2.3	863	10.83	60	650.00	1958	1410	**HW030+NMRV-P063**	56A4	-	-
0.31	2.7	3.9	863	10.83	60	650.00	3352	1659	**HW030+NMRV-P075**	56A4	-	-
0.11	2.2	1.4	829	7.88	100	787.50	1145	1410	**HW030+NMRV-P063**	56A4	-	-
0.19	2.2	2.4	829	7.88	100	787.50	1973	1659	**HW030+NMRV-P075**	56A4	-	-
0.12	2.0	1.5	1005	10.83	80	866.67	1458	1410	**HW030+NMRV-P063**	56A4	-	-
0.20	2.0	2.5	1005	10.83	80	866.67	2527	1659	**HW030+NMRV-P075**	56A4	-	-
0.08	1.6	1.0	1104	10.83	100	1083.33	1145	1410	**HW030+NMRV-P063**	56A4	-	-
0.15	1.6	1.8	1104	10.83	100	1083.33	2010	1659	**HW030+NMRV-P075**	56A4	-	-

0.12 HP

Maximum Power HP	Output Speed RPM	Service Factor sf	Output Torque in-lbs	Ratio Stage 1	Ratio Stage 2	Exact Ratio i	Max. Torque in-lbs	OHL Output Shaft lbs	Gearmotor		Gear Reducer	
									Reducer	Motor	Reducer	NEMA C-face
2.28	79	19.0	81	2.94	7.5	22.08	1538	706	**HW030+NMRV-P063**	56B4	-	-
1.36	40	11.3	148	2.94	15	44.17	1672	889	**HW030+NMRV-P063**	56B4	-	-
0.94	21	7.9	261	5.45	15	81.82	2053	1092	**HW030+NMRV-P063**	56B4	-	-
0.85	20	7.1	252	2.94	30	88.33	1778	1120	**HW030+NMRV-P063**	56B4	-	-
0.76	16	6.3	331	5.45	20	109.09	2099	1202	**HW030+NMRV-P063**	56B4	-	-
0.75	15	6.3	370	7.88	15	118.13	2320	1234	**HW030+NMRV-P063**	56B4	-	-
0.58	13	4.8	397	5.45	25	136.36	1913	1295	**HW030+NMRV-P063**	56B4	-	-
0.59	11	4.9	468	7.88	20	157.50	2308	1358	**HW030+NMRV-P063**	56B4	-	-
0.60	11	5.0	435	5.45	30	163.64	2184	1376	**HW030+NMRV-P063**	56B4	-	-
0.43	9.9	3.6	416	2.94	60	176.67	1490	1410	**HW030+NMRV-P063**	56B4	-	-
0.45	8.9	3.7	560	7.88	25	196.88	2098	1410	**HW030+NMRV-P063**	56B4	-	-
0.75	8.9	6.3	560	7.88	25	196.88	3508	1659	**HW030+NMRV-P075**	56B4	-	-
0.47	8.0	3.9	538	5.45	40	218.18	2115	1410	**HW030+NMRV-P063**	56B4	-	-
0.48	7.4	4.0	612	7.88	30	236.25	2468	1410	**HW030+NMRV-P063**	56B4	-	-

0.12 HP

Maximum Power HP	Output Speed RPM	Service Factor sf	Output Torque in-lbs	Ratio Stage 1	Ratio Stage 2	Exact Ratio i	Max. Torque in-lbs	OHL Output Shaft lbs	Gearmotor		Gear Reducer	
									Reducer	Motor	Reducer	NEMA C-face
0.78	7.4	6.5	612	7.88	30	236.25	3987	1659	**HW030+NMRV-P075**	56B4	-	-
0.38	6.4	3.2	621	5.45	50	272.73	1959	1410	**HW030+NMRV-P063**	56B4	-	-
0.37	5.6	3.1	750	7.88	40	315.00	2299	1410	**HW030+NMRV-P063**	56B4	-	-
0.61	5.6	5.1	750	7.88	40	315.00	3798	1659	**HW030+NMRV-P075**	56B4	-	-
0.29	4.4	2.4	870	7.88	50	393.75	2089	1410	**HW030+NMRV-P063**	56B4	-	-
0.47	4.4	3.9	870	7.88	50	393.75	3416	1659	**HW030+NMRV-P075**	56B4	-	-
0.28	4.0	2.4	1010	10.83	40	433.33	2392	1410	**HW030+NMRV-P063**	56B4	-	-
0.24	3.7	2.0	966	7.88	60	472.50	1896	1410	**HW030+NMRV-P063**	56B4	-	-
0.40	3.7	3.4	966	7.88	60	472.50	3239	1659	**HW030+NMRV-P075**	56B4	-	-
0.22	3.2	1.8	1174	10.83	50	541.67	2167	1410	**HW030+NMRV-P063**	56B4	-	-
0.31	3.2	2.6	1174	10.83	50	541.67	3062	1659	**HW030+NMRV-P075**	56B4	-	-
0.18	2.7	1.5	1295	10.83	60	650.00	1958	1410	**HW030+NMRV-P063**	56B4	-	-
0.31	2.7	2.6	1295	10.83	60	650.00	3352	1659	**HW030+NMRV-P075**	56B4	-	-
0.19	2.2	1.6	1244	7.88	100	787.50	1973	1659	**HW030+NMRV-P075**	56B4	-	-
0.20	2.0	1.7	1507	10.83	80	866.67	2527	1659	**HW030+NMRV-P075**	56B4	-	-
0.15	1.6	1.2	1656	10.83	100	1083.33	2010	1659	**HW030+NMRV-P075**	56B4	-	-

0.16 HP

Maximum Power HP	Output Speed RPM	Service Factor sf	Output Torque in-lbs	Ratio Stage 1	Ratio Stage 2	Exact Ratio i	Max. Torque in-lbs	OHL Output Shaft lbs	Gearmotor		Gear Reducer	
									Reducer	Motor	Reducer	NEMA C-face
0.73	79	4.6	104	2.94	7.5	22.08	475	393	**HA31+NMRV040**	63A4	-	-
1.25	79	7.8	105	2.94	7.5	22.08	820	540	**HA31+NMRV050**	63A4	-	-
2.28	79	14.2	108	2.94	7.5	22.08	1538	706	**HW030+NMRV-P063**	63A4	**HW030+NMRV-P063**	56C
0.74	74	4.6	113	4.75	5	23.75	522	403	**HA31+NMRV040**	63A4	-	-
0.85	74	5.3	113	4.75	5	23.75	603	553	**HA31+NMRV050**	63A4	-	-
0.71	69	4.4	121	5.10	5	25.50	534	413	**HA31+NMRV040**	63A4	-	-
0.83	69	5.2	121	5.10	5	25.50	628	566	**HA31+NMRV050**	63A4	-	-
1.93	60	12.1	140	3.87	7.5	29.00	1682	773	**HW030+NMRV-P063**	63A4	**HW030+NMRV-P063**	56C
0.59	59	3.7	135	2.94	10	29.44	499	433	**HA31+NMRV040**	63A4	-	-
1.12	59	7.0	137	2.94	10	29.44	956	594	**HA31+NMRV050**	63A4	-	-
0.61	56	3.8	148	6.30	5	31.50	565	443	**HA31+NMRV040**	63A4	-	-
0.67	56	4.2	148	6.30	5	31.50	623	608	**HA31+NMRV050**	63A4	-	-
0.55	49	3.4	164	4.75	7.5	35.63	558	461	**HA31+NMRV040**	63A4	-	-
0.85	49	5.3	166	4.75	7.5	35.63	883	633	**HA31+NMRV050**	63A4	-	-
1.53	45	9.5	177	3.87	10	38.67	1692	851	**HW030+NMRV-P063**	63A4	**HW030+NMRV-P063**	56C
0.50	43	3.1	187	5.45	7.5	40.91	580	483	**HA31+NMRV040**	63A4	-	-
0.78	43	4.9	189	5.45	7.5	40.91	918	663	**HA31+NMRV050**	63A4	-	-
0.43	40	2.7	191	2.94	15	44.17	517	496	**HA31+NMRV040**	63A4	-	-
0.79	40	5.0	193	2.94	15	44.17	956	680	**HA31+NMRV050**	63A4	-	-
1.36	40	8.5	197	2.94	15	44.17	1672	889	**HW030+NMRV-P063**	63A4	**HW030+NMRV-P063**	56C
0.43	37	2.7	212	4.75	10	47.50	569	508	**HA31+NMRV040**	63A4	-	-
0.81	37	5.1	216	4.75	10	47.50	1093	697	**HA31+NMRV050**	63A4	-	-
1.35	37	8.4	216	4.75	10	47.50	1813	911	**HW030+NMRV-P063**	63A4	**HW030+NMRV-P063**	56C
0.39	32	2.4	241	5.45	10	54.55	586	532	**HA31+NMRV040**	63A4	-	-
0.73	32	4.6	246	5.45	10	54.55	1127	730	**HA31+NMRV050**	63A4	-	-
0.32	30	2.0	244	2.94	20	58.89	486	545	**HA31+NMRV040**	63A4	-	-
0.55	30	3.4	247	2.94	20	58.89	850	749	**HA31+NMRV050**	63A4	-	-
1.16	30	7.2	252	3.87	15	58.00	1829	974	**HW030+NMRV-P063**	63A4	**HW030+NMRV-P063**	56C
0.35	28	2.2	277	6.30	10	63.00	601	558	**HA31+NMRV040**	63A4	-	-
0.66	28	4.1	283	6.30	10	63.00	1157	766	**HA31+NMRV050**	63A4	-	-

0.16 HP

Maximum Power HP	Output Speed RPM	Service Factor sf	Output Torque in-lbs	Ratio Stage 1	Ratio Stage 2	Exact Ratio i	Max. Torque in-lbs	OHL Output Shaft lbs	Gearmotor		Gear Reducer	
									Reducer	Motor	Reducer	NEMA C-face
0.31	25	1.9	299	4.75	15	71.25	583	581	**HA31+NMRV040**	63A4	-	-
0.58	25	3.6	302	4.75	15	71.25	1086	798	**HA31+NMRV050**	63A4	-	-
1.03	25	6.4	306	4.75	15	71.25	1960	1043	**HW030+NMRV-P063**	63A4	**HW030+NMRV-P063**	56C
0.90	23	5.6	323	3.87	20	77.33	1816	1072	**HW030+NMRV-P063**	63A4	**HW030+NMRV-P063**	56C
0.29	22	1.8	342	7.88	10	78.75	621	601	**HA31+NMRV040**	63A4	-	-
0.51	22	3.2	351	7.88	10	78.75	1128	825	**HA31+NMRV050**	63A4	-	-
0.94	21	5.9	348	5.45	15	81.82	2053	1092	**HW030+NMRV-P063**	63A4	**HW030+NMRV-P063**	56C
0.26	20	1.6	321	2.94	30	88.33	530	624	**HA31+NMRV040**	63A4	-	-
0.47	20	2.9	328	2.94	30	88.33	960	857	**HA31+NMRV050**	63A4	-	-
0.85	20	5.3	336	2.94	30	88.33	1778	1120	**HW030+NMRV-P063**	63A4	**HW030+NMRV-P063**	56C
0.25	19	1.6	392	6.30	15	94.50	612	639	**HA31+NMRV040**	63A4	-	-
0.47	19	2.9	394	6.30	15	94.50	1144	877	**HA31+NMRV050**	63A4	-	-
0.82	18	5.1	389	4.75	20	95.00	1997	1148	**HW030+NMRV-P063**	63A4	**HW030+NMRV-P063**	56C
0.21	17	1.3	407	5.10	20	102.00	542	655	**HA31+NMRV040**	63A4	-	-
0.38	17	2.4	410	5.10	20	102.00	978	899	**HA31+NMRV050**	63A4	-	-
0.20	16	1.3	433	5.45	20	109.09	547	670	**HA31+NMRV040**	63A4	-	-
0.36	16	2.3	436	5.45	20	109.09	991	919	**HA31+NMRV050**	63A4	-	-
0.76	16	4.7	442	5.45	20	109.09	2099	1202	**HW030+NMRV-P063**	63A4	**HW030+NMRV-P063**	56C
0.21	15	1.3	486	7.88	15	118.13	630	688	**HA31+NMRV040**	63A4	-	-
0.39	15	2.4	487	7.88	15	118.13	1180	944	**HA31+NMRV050**	63A4	-	-
0.75	15	4.7	494	7.88	15	118.13	2320	1234	**HW030+NMRV-P063**	63A4	**HW030+NMRV-P063**	56C
0.16	14	1.0	483	5.10	25	127.50	498	706	**HA31+NMRV040**	63A4	-	-
0.30	14	1.9	483	5.10	25	127.50	898	969	**HA31+NMRV050**	63A4	-	-
0.58	13	3.6	529	5.45	25	136.36	1913	1295	**HW030+NMRV-P063**	63A4	**HW030+NMRV-P063**	56C
0.19	12	1.2	495	4.75	30	142.50	591	732	**HA31+NMRV040**	63A4	-	-
0.36	12	2.2	503	4.75	30	142.50	1124	1005	**HA31+NMRV050**	63A4	-	-
0.65	12	4.1	511	4.75	30	142.50	2085	1314	**HW030+NMRV-P063**	63A4	**HW030+NMRV-P063**	56C
0.17	11	1.0	505	3.87	40	154.67	523	753	**HA31+NMRV040**	63A4	-	-
0.17	11	1.1	562	5.45	30	163.64	607	767	**HA31+NMRV040**	63A4	-	-
0.30	11	1.9	514	3.87	40	154.67	956	1033	**HA31+NMRV050**	63A4	-	-
0.33	11	2.0	571	5.45	30	163.64	1169	1053	**HA31+NMRV050**	63A4	-	-
0.59	11	3.7	623	7.88	20	157.50	2308	1358	**HW030+NMRV-P063**	63A4	**HW030+NMRV-P063**	56C
0.60	11	3.8	580	5.45	30	163.64	2184	1376	**HW030+NMRV-P063**	63A4	**HW030+NMRV-P063**	56C
0.43	9.9	2.7	555	2.94	60	176.67	1490	1410	**HW030+NMRV-P063**	63A4	**HW030+NMRV-P063**	56C
0.30	9.3	1.9	652	6.30	30	189.00	1210	1088	**HA31+NMRV050**	63A4	-	-
0.45	8.9	2.8	746	7.88	25	196.88	2098	1410	**HW030+NMRV-P063**	63A4	**HW030+NMRV-P063**	56C
0.25	8.6	1.6	652	5.10	40	204.00	1017	1088	**HA31+NMRV050**	63A4	-	-
0.47	8.0	3.0	717	5.45	40	218.18	2115	1410	**HW030+NMRV-P063**	63A4	**HW030+NMRV-P063**	56C
0.25	7.4	1.6	802	7.88	30	236.25	1262	1088	**HA31+NMRV050**	63A4	-	-
0.48	7.4	3.0	815	7.88	30	236.25	2468	1410	**HW030+NMRV-P063**	63A4	**HW030+NMRV-P063**	56C
0.21	6.9	1.3	787	6.30	40	252.00	1054	1088	**HA31+NMRV050**	63A4	-	-
0.19	6.4	1.2	804	5.45	50	272.73	977	1088	**HA31+NMRV050**	63A4	-	-
0.38	6.4	2.4	829	5.45	50	272.73	1959	1410	**HW030+NMRV-P063**	63A4	**HW030+NMRV-P063**	56C
0.62	6.4	3.8	829	5.45	50	272.73	3190	1659	**HW030+NMRV-P075**	63A4	**HW030+NMRV-P075**	56C
0.17	6.1	1.1	791	4.75	60	285.00	840	1088	**HA31+NMRV050**	63A4	-	-
0.18	5.6	1.1	913	6.30	50	315.00	1007	1088	**HA31+NMRV050**	63A4	-	-
0.37	5.6	2.3	1000	7.88	40	315.00	2299	1410	**HW030+NMRV-P063**	63A4	**HW030+NMRV-P063**	56C
0.61	5.6	3.8	1000	7.88	40	315.00	3798	1659	**HW030+NMRV-P075**	63A4	**HW030+NMRV-P075**	56C
0.29	4.4	1.8	1160	7.88	50	393.75	2089	1410	**HW030+NMRV-P063**	63A4	**HW030+NMRV-P063**	56C
0.47	4.4	2.9	1160	7.88	50	393.75	3416	1659	**HW030+NMRV-P075**	63A4	**HW030+NMRV-P075**	56C
0.28	4.0	1.8	1346	10.83	40	433.33	2392	1410	**HW030+NMRV-P063**	63A4	**HW030+NMRV-P063**	56C
0.62	4.0	3.9	1427	8.75	50	437.50	5525	1839	**HW040+NMRV-P090**	63A4	**HW040+NMRV-P090**	56C
0.54	3.8	3.3	1412	7.67	60	460.00	4725	1839	**HW040+NMRV-P090**	63A4	**HW040+NMRV-P090**	56C
0.24	3.7	1.5	1287	7.88	60	472.50	1896	1410	**HW030+NMRV-P063**	63A4	**HW030+NMRV-P063**	56C

0.16 HP

Maximum Power HP	Output Speed RPM	Service Factor sf	Output Torque in-lbs	Ratio Stage 1	Ratio Stage 2	Exact Ratio i	Max. Torque in-lbs	OHL Output Shaft lbs	Gearmotor		Gear Reducer	
									Reducer	Motor	Reducer	NEMA C-face
0.40	3.7	2.5	1287	7.88	60	472.50	3239	1659	**HW030+NMRV-P075**	63A4	**HW030+NMRV-P075**	56C
0.48	3.3	3.0	1595	8.75	60	525.00	4811	1839	**HW040+NMRV-P090**	63A4	**HW040+NMRV-P090**	56C
0.22	3.2	1.4	1565	10.83	50	541.67	2167	1410	**HW030+NMRV-P063**	63A4	**HW030+NMRV-P063**	56C
0.31	3.2	2.0	1565	10.83	50	541.67	3062	1659	**HW030+NMRV-P075**	63A4	**HW030+NMRV-P075**	56C
0.35	2.9	2.2	1707	7.67	80	613.33	3771	1839	**HW040+NMRV-P090**	63A4	**HW040+NMRV-P090**	56C
0.61	2.9	3.8	1845	7.67	80	613.33	7022	2320	**HW040+NMRV-P110**	63A4	**HW040+NMRV-P110**	56C
0.18	2.7	1.1	1727	10.83	60	650.00	1958	1410	**HW030+NMRV-P063**	63A4	**HW030+NMRV-P063**	56C
0.31	2.7	1.9	1727	10.83	60	650.00	3352	1659	**HW030+NMRV-P075**	63A4	**HW030+NMRV-P075**	56C
0.32	2.5	2.0	1929	8.75	80	700.00	3828	1839	**HW040+NMRV-P090**	63A4	**HW040+NMRV-P090**	56C
0.55	2.5	3.4	2087	8.75	80	700.00	7143	2320	**HW040+NMRV-P110**	63A4	**HW040+NMRV-P110**	56C
0.26	2.3	1.6	1922	7.67	100	766.67	3110	1839	**HW040+NMRV-P090**	63A4	**HW040+NMRV-P090**	56C
0.43	2.3	2.7	2094	7.67	100	766.67	5645	2320	**HW040+NMRV-P110**	63A4	**HW040+NMRV-P110**	56C
0.19	2.2	1.2	1659	7.88	100	787.50	1973	1659	**HW030+NMRV-P075**	63A4	**HW030+NMRV-P075**	56C
0.20	2.0	1.3	2010	10.83	80	866.67	2527	1659	**HW030+NMRV-P075**	63A4	**HW030+NMRV-P075**	56C
0.23	2.0	1.4	2165	8.75	100	875.00	3130	1839	**HW040+NMRV-P090**	63A4	**HW040+NMRV-P090**	56C
0.38	2.0	2.4	2362	8.75	100	875.00	5681	2320	**HW040+NMRV-P110**	63A4	**HW040+NMRV-P110**	56C

0.25 HP

Maximum Power HP	Output Speed RPM	Service Factor sf	Output Torque in-lbs	Ratio Stage 1	Ratio Stage 2	Exact Ratio i	Max. Torque in-lbs	OHL Output Shaft lbs	Gearmotor		Gear Reducer	
									Reducer	Motor	Reducer	NEMA C-face
0.76	79	3.1	156	2.94	7.5	22.08	475	393	**HA31+NMRV040**	63B4	**-**	-
1.30	79	5.2	157	2.94	7.5	22.08	820	540	**HA31+NMRV050**	63B4	**-**	-
2.37	79	9.5	162	2.94	7.5	22.08	1538	706	**HW030+NMRV-P063**	63B4	**HW030+NMRV-P063**	56C
0.77	74	3.1	170	4.75	5	23.75	522	403	**HA31+NMRV040**	63B4	**-**	-
0.89	74	3.6	170	4.75	5	23.75	603	553	**HA31+NMRV050**	63B4	**-**	-
0.74	69	2.9	182	5.10	5	25.50	534	413	**HA31+NMRV040**	63B4	**-**	-
0.86	69	3.5	182	5.10	5	25.50	628	566	**HA31+NMRV050**	63B4	**-**	-
2.01	60	8.0	209	3.87	7.5	29.00	1682	773	**HW030+NMRV-P063**	63B4	**HW030+NMRV-P063**	56C
0.62	59	2.5	202	2.94	10	29.44	499	433	**HA31+NMRV040**	63B4	**-**	-
1.16	59	4.7	205	2.94	10	29.44	956	594	**HA31+NMRV050**	63B4	**-**	-
0.63	56	2.5	223	6.30	5	31.50	565	443	**HA31+NMRV040**	63B4	**-**	-
0.70	56	2.8	223	6.30	5	31.50	623	608	**HA31+NMRV050**	63B4	**-**	-
0.57	49	2.3	246	4.75	7.5	35.63	558	461	**HA31+NMRV040**	63B4	**-**	-
0.89	49	3.6	249	4.75	7.5	35.63	883	633	**HA31+NMRV050**	63B4	**-**	-
1.59	45	6.4	266	3.87	10	38.67	1692	851	**HW030+NMRV-P063**	63B4	**HW030+NMRV-P063**	56C
0.52	43	2.1	280	5.45	7.5	40.91	580	483	**HA31+NMRV040**	63B4	**-**	-
0.81	43	3.2	284	5.45	7.5	40.91	918	663	**HA31+NMRV050**	63B4	**-**	-
0.45	40	1.8	286	2.94	15	44.17	517	496	**HA31+NMRV040**	63B4	**-**	-
0.83	40	3.3	290	2.94	15	44.17	956	680	**HA31+NMRV050**	63B4	**-**	-
1.42	40	5.7	295	2.94	15	44.17	1672	889	**HW030+NMRV-P063**	63B4	**HW030+NMRV-P063**	56C
0.45	37	1.8	318	4.75	10	47.50	569	508	**HA31+NMRV040**	63B4	**-**	-
0.85	37	3.4	323	4.75	10	47.50	1093	697	**HA31+NMRV050**	63B4	**-**	-
1.40	37	5.6	323	4.75	10	47.50	1813	911	**HW030+NMRV-P063**	63B4	**HW030+NMRV-P063**	56C
0.40	32	1.6	362	5.45	10	54.55	586	532	**HA31+NMRV040**	63B4	**-**	-
0.76	32	3.1	369	5.45	10	54.55	1127	730	**HA31+NMRV050**	63B4	**-**	-
0.33	30	1.3	366	2.94	20	58.89	486	545	**HA31+NMRV040**	63B4	**-**	-
0.57	30	2.3	371	2.94	20	58.89	850	749	**HA31+NMRV050**	63B4	**-**	-
1.21	30	4.8	379	3.87	15	58.00	1829	974	**HW030+NMRV-P063**	63B4	**HW030+NMRV-P063**	56C
0.36	28	1.4	415	6.30	10	63.00	601	558	**HA31+NMRV040**	63B4	**-**	-
0.68	28	2.7	424	6.30	10	63.00	1157	766	**HA31+NMRV050**	63B4	**-**	-

0.25 HP

Maximum Power HP	Output Speed RPM	Service Factor sf	Output Torque in-lbs	Ratio Stage 1	Ratio Stage 2	Exact Ratio i	Max. Torque in-lbs	OHL Output Shaft lbs	Gearmotor		Gear Reducer	
									Reducer	Motor	Reducer	NEMA C-face
0.32	25	1.3	449	4.75	15	71.25	583	581	**HA31+NMRV040**	63B4	-	-
0.60	25	2.4	452	4.75	15	71.25	1086	798	**HA31+NMRV050**	63B4	-	-
1.07	25	4.3	458	4.75	15	71.25	1960	1043	**HW030+NMRV-P063**	63B4	**HW030+NMRV-P063**	56C
0.94	23	3.8	484	3.87	20	77.33	1816	1072	**HW030+NMRV-P063**	63B4	**HW030+NMRV-P063**	56C
0.30	22	1.2	514	7.88	10	78.75	621	601	**HA31+NMRV040**	63B4	-	-
0.54	22	2.1	526	7.88	10	78.75	1128	825	**HA31+NMRV050**	63B4	-	-
0.98	21	3.9	522	5.45	15	81.82	2053	1092	**HW030+NMRV-P063**	63B4	**HW030+NMRV-P063**	56C
0.27	20	1.1	482	2.94	30	88.33	530	624	**HA31+NMRV040**	63B4	-	-
0.49	20	2.0	491	2.94	30	88.33	960	857	**HA31+NMRV050**	63B4	-	-
0.88	20	3.5	504	2.94	30	88.33	1778	1120	**HW030+NMRV-P063**	63B4	**HW030+NMRV-P063**	56C
0.26	19	1.0	588	6.30	15	94.50	612	639	**HA31+NMRV040**	63B4	-	-
0.48	19	1.9	590	6.30	15	94.50	1144	877	**HA31+NMRV050**	63B4	-	-
0.86	18	3.4	584	4.75	20	95.00	1997	1148	**HW030+NMRV-P063**	63B4	**HW030+NMRV-P063**	56C
0.40	17	1.6	614	5.10	20	102.00	978	899	**HA31+NMRV050**	63B4	-	-
0.38	16	1.5	654	5.45	20	109.09	991	919	**HA31+NMRV050**	63B4	-	-
0.79	16	3.2	663	5.45	20	109.09	2099	1202	**HW030+NMRV-P063**	63B4	**HW030+NMRV-P063**	56C
0.40	15	1.6	730	7.88	15	118.13	1180	944	**HA31+NMRV050**	63B4	-	-
0.78	15	3.1	740	7.88	15	118.13	2320	1234	**HW030+NMRV-P063**	63B4	**HW030+NMRV-P063**	56C
0.31	14	1.2	725	5.10	25	127.50	898	969	**HA31+NMRV050**	63B4	-	-
0.60	13	2.4	794	5.45	25	136.36	1913	1295	**HW030+NMRV-P063**	63B4	**HW030+NMRV-P063**	56C
0.37	12	1.5	755	4.75	30	142.50	1124	1005	**HA31+NMRV050**	63B4	-	-
0.68	12	2.7	767	4.75	30	142.50	2085	1314	**HW030+NMRV-P063**	63B4	**HW030+NMRV-P063**	56C
0.31	11	1.2	771	3.87	40	154.67	956	1033	**HA31+NMRV050**	63B4	-	-
0.34	11	1.4	856	5.45	30	163.64	1169	1053	**HA31+NMRV050**	63B4	-	-
0.63	11	2.5	870	5.45	30	163.64	2184	1376	**HW030+NMRV-P063**	63B4	**HW030+NMRV-P063**	56C
0.62	11	2.5	935	7.88	20	157.50	2308	1358	**HW030+NMRV-P063**	63B4	**HW030+NMRV-P063**	56C
0.97	11	3.9	797	3.87	40	154.67	3081	1594	**HW030+NMRV-P075**	63B4	**HW030+NMRV-P075**	56C
0.45	9.9	1.8	833	2.94	60	176.67	1490	1410	**HW030+NMRV-P063**	63B4	**HW030+NMRV-P063**	56C
0.75	9.9	3.0	833	2.94	60	176.67	2492	1659	**HW030+NMRV-P075**	63B4	**HW030+NMRV-P075**	56C
0.96	9.4	3.8	963	3.11	60	186.32	3700	1839	**HW040+NMRV-P090**	63B4	**HW040+NMRV-P090**	56C
0.31	9.3	1.2	977	6.30	30	189.00	1210	1088	**HA31+NMRV050**	63B4	-	-
0.47	8.9	1.9	1119	7.88	25	196.88	2098	1410	**HW030+NMRV-P063**	63B4	**HW030+NMRV-P063**	56C
0.78	8.9	3.1	1119	7.88	25	196.88	3508	1659	**HW030+NMRV-P075**	63B4	**HW030+NMRV-P075**	56C
0.26	8.6	1.0	979	5.10	40	204.00	1017	1088	**HA31+NMRV050**	63B4	-	-
0.49	8.0	2.0	1075	5.45	40	218.18	2115	1410	**HW030+NMRV-P063**	63B4	**HW030+NMRV-P063**	56C
0.80	8.0	3.2	1075	5.45	40	218.18	3457	1659	**HW030+NMRV-P075**	63B4	**HW030+NMRV-P075**	56C
0.26	7.4	1.0	1203	7.88	30	236.25	1262	1088	**HA31+NMRV050**	63B4	-	-
0.50	7.4	2.0	1223	7.88	30	236.25	2468	1410	**HW030+NMRV-P063**	63B4	**HW030+NMRV-P063**	56C
0.81	7.4	3.3	1223	7.88	30	236.25	3987	1659	**HW030+NMRV-P075**	63B4	**HW030+NMRV-P075**	56C
0.84	6.9	3.3	1240	4.20	60	252.00	4149	1839	**HW040+NMRV-P090**	63B4	**HW040+NMRV-P090**	56C
0.39	6.4	1.6	1243	5.45	50	272.73	1959	1410	**HW030+NMRV-P063**	63B4	**HW030+NMRV-P063**	56C
0.64	6.4	2.6	1243	5.45	50	272.73	3190	1659	**HW030+NMRV-P075**	63B4	**HW030+NMRV-P075**	56C
0.91	6.4	3.6	1401	5.50	50	275.00	5075	1839	**HW040+NMRV-P090**	63B4	**HW040+NMRV-P090**	56C
0.85	5.7	3.4	1535	6.09	50	304.55	5192	1839	**HW040+NMRV-P090**	63B4	**HW040+NMRV-P090**	56C
0.38	5.6	1.5	1500	7.88	40	315.00	2299	1410	**HW030+NMRV-P063**	63B4	**HW030+NMRV-P063**	56C
0.63	5.6	2.5	1500	7.88	40	315.00	3798	1659	**HW030+NMRV-P075**	63B4	**HW030+NMRV-P075**	56C
0.71	5.3	2.8	1569	5.50	60	330.00	4450	1839	**HW040+NMRV-P090**	63B4	**HW040+NMRV-P090**	56C
0.72	4.6	2.9	1894	7.67	50	383.33	5417	1839	**HW040+NMRV-P090**	63B4	**HW040+NMRV-P090**	56C
0.30	4.4	1.2	1740	7.88	50	393.75	2089	1410	**HW030+NMRV-P063**	63B4	**HW030+NMRV-P063**	56C
0.49	4.4	2.0	1740	7.88	50	393.75	3416	1659	**HW030+NMRV-P075**	63B4	**HW030+NMRV-P075**	56C
0.30	4.0	1.2	2019	10.83	40	433.33	2392	1410	**HW030+NMRV-P063**	63B4	**HW030+NMRV-P063**	56C
0.65	4.0	2.6	2141	8.75	50	437.50	5525	1839	**HW040+NMRV-P090**	63B4	**HW040+NMRV-P090**	56C
0.81	4.0	3.3	2041	5.50	80	440.00	6637	2320	**HW040+NMRV-P110**	63B4	**HW040+NMRV-P110**	56C
0.56	3.8	2.2	2118	7.67	60	460.00	4725	1839	**HW040+NMRV-P090**	63B4	**HW040+NMRV-P090**	56C

0.25 HP

Maximum Power HP	Output Speed RPM	Service Factor sf	Output Torque in-lbs	Ratio Stage 1	Ratio Stage 2	Exact Ratio i	Max. Torque in-lbs	OHL Output Shaft lbs	Gearmotor		Gear Reducer	
									Reducer	Motor	Reducer	NEMA C-face
0.93	3.8	3.7	2273	7.67	60	460.00	8491	2320	**HW040+NMRV-P110**	63B4	**HW040+NMRV-P110**	56C
0.42	3.7	1.7	1931	7.88	60	472.50	3239	1659	**HW030+NMRV-P075**	63B4	**HW030+NMRV-P075**	56C
0.50	3.3	2.0	2392	8.75	60	525.00	4811	1839	**HW040+NMRV-P090**	63B4	**HW040+NMRV-P090**	56C
0.78	3.3	3.1	2569	8.75	60	525.00	8008	2320	**HW040+NMRV-P110**	63B4	**HW040+NMRV-P110**	56C
0.33	3.2	1.3	2347	10.83	50	541.67	3062	1659	**HW030+NMRV-P075**	63B4	**HW030+NMRV-P075**	56C
0.37	2.9	1.5	2560	7.67	80	613.33	3771	1839	**HW040+NMRV-P090**	63B4	**HW040+NMRV-P090**	56C
0.63	2.9	2.5	2767	7.67	80	613.33	7022	2320	**HW040+NMRV-P110**	63B4	**HW040+NMRV-P110**	56C
0.32	2.7	1.3	2590	10.83	60	650.00	3352	1659	**HW030+NMRV-P075**	63B4	**HW030+NMRV-P075**	56C
0.33	2.5	1.3	2894	8.75	80	700.00	3828	1839	**HW040+NMRV-P090**	63B4	**HW040+NMRV-P090**	56C
0.57	2.5	2.3	3130	8.75	80	700.00	7143	2320	**HW040+NMRV-P110**	63B4	**HW040+NMRV-P110**	56C
0.27	2.3	1.1	2883	7.67	100	766.67	3110	1839	**HW040+NMRV-P090**	63B4	**HW040+NMRV-P090**	56C
0.45	2.3	1.8	3141	7.67	100	766.67	5645	2320	**HW040+NMRV-P110**	63B4	**HW040+NMRV-P110**	56C
0.40	2.0	1.6	3543	8.75	100	875.00	5681	2320	**HW040+NMRV-P110**	63B4	**HW040+NMRV-P110**	56C

0.33 HP

Maximum Power HP	Output Speed RPM	Service Factor sf	Output Torque in-lbs	Ratio Stage 1	Ratio Stage 2	Exact Ratio i	Max. Torque in-lbs	OHL Output Shaft lbs	Gearmotor		Gear Reducer	
									Reducer	Motor	Reducer	NEMA C-face
0.73	79	2.2	216	2.94	7.5	22.08	475	393	**HA31+NMRV040**	63D4/71A4	-	-
1.24	79	3.8	219	2.94	7.5	22.08	820	540	**HA31+NMRV050**	71A4	-	-
2.26	79	6.8	225	2.94	7.5	22.08	1538	706	**HW030+NMRV-P063**	63D4/71A4	**HW030+NMRV-P063**	56C
0.73	74	2.2	236	4.75	5	23.75	522	403	**HA31+NMRV040**	63D4/71A4	-	-
0.84	74	2.6	236	4.75	5	23.75	603	553	**HA31+NMRV050**	63D4/71A4	-	-
0.70	69	2.1	252	5.10	5	25.50	534	413	**HA31+NMRV040**	63D4/71A4	-	-
0.82	69	2.5	252	5.10	5	25.50	628	566	**HA31+NMRV050**	63D4/71A4	-	-
1.91	60	5.8	291	3.87	7.5	29.00	1682	773	**HW030+NMRV-P063**	63D4/71A4	**HW030+NMRV-P063**	56C
0.59	59	1.8	281	2.94	10	29.44	499	433	**HA31+NMRV040**	63D4/71A4	-	-
1.11	59	3.4	285	2.94	10	29.44	956	594	**HA31+NMRV050**	63D4/71A4	-	-
0.60	56	1.8	309	6.30	5	31.50	565	443	**HA31+NMRV040**	63D4/71A4	-	-
0.67	56	2.0	309	6.30	5	31.50	623	608	**HA31+NMRV050**	63D4/71A4	-	-
0.54	49	1.6	341	4.75	7.5	35.63	558	461	**HA31+NMRV040**	63D4/71A4	-	-
0.84	49	2.6	345	4.75	7.5	35.63	883	633	**HA31+NMRV050**	63D4/71A4	-	-
1.51	45	4.6	369	3.87	10	38.67	1692	851	**HW030+NMRV-P063**	63D4/71A4	**HW030+NMRV-P063**	56C
0.49	43	1.5	389	5.45	7.5	40.91	580	483	**HA31+NMRV040**	63D4/71A4	-	-
0.77	43	2.3	394	5.45	7.5	40.91	918	663	**HA31+NMRV050**	63D4/71A4	-	-
0.43	40	1.3	397	2.94	15	44.17	517	496	**HA31+NMRV040**	63D4/71A4	-	-
0.78	40	2.4	402	2.94	15	44.17	956	680	**HA31+NMRV050**	63D4/71A4	-	-
1.34	40	4.1	410	2.94	15	44.17	1672	889	**HW030+NMRV-P063**	63D4/71A4	**HW030+NMRV-P063**	56C
0.43	37	1.3	441	4.75	10	47.50	569	508	**HA31+NMRV040**	63D4/71A4	-	-
0.80	37	2.4	449	4.75	10	47.50	1093	697	**HA31+NMRV050**	63D4/71A4	-	-
1.33	37	4.0	449	4.75	10	47.50	1813	911	**HW030+NMRV-P063**	63D4/71A4	**HW030+NMRV-P063**	56C
0.38	32	1.2	502	5.45	10	54.55	586	532	**HA31+NMRV040**	63D4/71A4	-	-
0.73	32	2.2	513	5.45	10	54.55	1127	730	**HA31+NMRV050**	63D4/71A4	-	-
0.54	30	1.6	516	2.94	20	58.89	850	749	**HA31+NMRV050**	63D4/71A4	-	-
1.15	30	3.5	526	3.87	15	58.00	1829	974	**HW030+NMRV-P063**	63D4/71A4	**HW030+NMRV-P063**	56C
0.34	28	1.0	576	6.30	10	63.00	601	558	**HA31+NMRV040**	63D4/71A4	-	-
0.65	28	2.0	589	6.30	10	63.00	1157	766	**HA31+NMRV050**	63D4/71A4	-	-
0.57	25	1.7	628	4.75	15	71.25	1086	798	**HA31+NMRV050**	63D4/71A4	-	-
1.02	25	3.1	637	4.75	15	71.25	1960	1043	**HW030+NMRV-P063**	63D4/71A4	**HW030+NMRV-P063**	56C
0.89	23	2.7	673	3.87	20	77.33	1816	1072	**HW030+NMRV-P063**	63D4/71A4	**HW030+NMRV-P063**	56C
0.51	22	1.5	731	7.88	10	78.75	1128	825	**HA31+NMRV050**	63D4/71A4	-	-

0.33 HP

Maximum Power HP	Output Speed RPM	Service Factor sf	Output Torque in-lbs	Ratio Stage 1	Ratio Stage 2	Exact Ratio i	Max. Torque in-lbs	OHL Output Shaft lbs	Gearmotor		Gear Reducer	
									Reducer	Motor	Reducer	NEMA C-face
0.93	21	2.8	725	5.45	15	81.82	2053	1092	**HW030+NMRV-P063**	63D4/71A4	**HW030+NMRV-P063**	56C
0.46	20	1.4	683	2.94	30	88.33	960	857	**HA31+NMRV050**	63D4/71A4	**-**	-
0.84	20	2.5	699	2.94	30	88.33	1778	1120	**HW030+NMRV-P063**	63D4/71A4	**HW030+NMRV-P063**	56C
0.46	19	1.4	820	6.30	15	94.50	1144	877	**HA31+NMRV050**	63D4/71A4	**-**	-
0.81	18	2.5	810	4.75	20	95.00	1997	1148	**HW030+NMRV-P063**	63D4/71A4	**HW030+NMRV-P063**	56C
0.38	17	1.1	853	5.10	20	102.00	978	899	**HA31+NMRV050**	63D4/71A4	**-**	-
0.36	16	1.1	908	5.45	20	109.09	991	919	**HA31+NMRV050**	63D4/71A4	**-**	-
0.75	16	2.3	921	5.45	20	109.09	2099	1202	**HW030+NMRV-P063**	63D4/71A4	**HW030+NMRV-P063**	56C
1.26	16	3.8	921	5.45	20	109.09	3525	1419	**HW030+NMRV-P075**	63D4/71A4	**HW030+NMRV-P075**	56C
0.38	15	1.2	1015	7.88	15	118.13	1180	944	**HA31+NMRV050**	63D4/71A4	**-**	-
0.74	15	2.3	1028	7.88	15	118.13	2320	1234	**HW030+NMRV-P063**	63D4/71A4	**HW030+NMRV-P063**	56C
1.17	15	3.5	887	3.87	30	116.00	3144	1448	**HW030+NMRV-P075**	63D4/71A4	**HW030+NMRV-P075**	56C
0.57	13	1.7	1103	5.45	25	136.36	1913	1295	**HW030+NMRV-P063**	63D4/71A4	**HW030+NMRV-P063**	56C
0.95	13	2.9	1103	5.45	25	136.36	3183	1528	**HW030+NMRV-P075**	63D4/71A4	**HW030+NMRV-P075**	56C
0.35	12	1.1	1049	4.75	30	142.50	1124	1005	**HA31+NMRV050**	63D4/71A4	**-**	-
0.65	12	2.0	1065	4.75	30	142.50	2085	1314	**HW030+NMRV-P063**	63D4/71A4	**HW030+NMRV-P063**	56C
1.04	12	3.2	1065	4.75	30	142.50	3369	1551	**HW030+NMRV-P075**	63D4/71A4	**HW030+NMRV-P075**	56C
0.60	11	1.8	1208	5.45	30	163.64	2184	1376	**HW030+NMRV-P063**	63D4/71A4	**HW030+NMRV-P063**	56C
0.59	11	1.8	1299	7.88	20	157.50	2308	1358	**HW030+NMRV-P063**	63D4/71A4	**HW030+NMRV-P063**	56C
0.92	11	2.8	1107	3.87	40	154.67	3081	1594	**HW030+NMRV-P075**	63D4/71A4	**HW030+NMRV-P075**	56C
0.96	11	2.9	1208	5.45	30	163.64	3528	1624	**HW030+NMRV-P075**	63D4/71A4	**HW030+NMRV-P075**	56C
1.15	11	3.5	1188	3.11	50	155.26	4139	1766	**HW040+NMRV-P090**	63D4/71A4	**HW040+NMRV-P090**	56C
0.43	9.9	1.3	1157	2.94	60	176.67	1490	1410	**HW030+NMRV-P063**	63D4/71A4	**HW030+NMRV-P063**	56C
0.71	9.9	2.2	1157	2.94	60	176.67	2492	1659	**HW030+NMRV-P075**	63D4/71A4	**HW030+NMRV-P075**	56C
0.91	9.4	2.8	1338	3.11	60	186.32	3700	1839	**HW040+NMRV-P090**	63D4/71A4	**HW040+NMRV-P090**	56C
0.45	8.9	1.3	1554	7.88	25	196.88	2098	1410	**HW030+NMRV-P063**	63D4/71A4	**HW030+NMRV-P063**	56C
0.74	8.9	2.3	1554	7.88	25	196.88	3508	1659	**HW030+NMRV-P075**	63D4/71A4	**HW030+NMRV-P075**	56C
0.47	8.0	1.4	1493	5.45	40	218.18	2115	1410	**HW030+NMRV-P063**	63D4/71A4	**HW030+NMRV-P063**	56C
0.76	8.0	2.3	1493	5.45	40	218.18	3457	1659	**HW030+NMRV-P075**	63D4/71A4	**HW030+NMRV-P075**	56C
1.09	8.0	3.3	1649	5.50	40	220.00	5432	1839	**HW040+NMRV-P090**	63D4/71A4	**HW040+NMRV-P090**	56C
0.48	7.4	1.5	1699	7.88	30	236.25	2468	1410	**HW030+NMRV-P063**	63D4/71A4	**HW030+NMRV-P063**	56C
0.77	7.4	2.3	1699	7.88	30	236.25	3987	1659	**HW030+NMRV-P075**	63D4/71A4	**HW030+NMRV-P075**	56C
0.79	6.9	2.4	1723	4.20	60	252.00	4149	1839	**HW040+NMRV-P090**	63D4/71A4	**HW040+NMRV-P090**	56C
0.37	6.4	1.1	1726	5.45	50	272.73	1959	1410	**HW030+NMRV-P063**	63D4/71A4	**HW030+NMRV-P063**	56C
0.61	6.4	1.8	1726	5.45	50	272.73	3190	1659	**HW030+NMRV-P075**	63D4/71A4	**HW030+NMRV-P075**	56C
0.86	6.4	2.6	1945	5.50	50	275.00	5075	1839	**HW040+NMRV-P090**	63D4/71A4	**HW040+NMRV-P090**	56C
0.80	5.7	2.4	2132	6.09	50	304.55	5192	1839	**HW040+NMRV-P090**	63D4/71A4	**HW040+NMRV-P090**	56C
0.36	5.6	1.1	2083	7.88	40	315.00	2299	1410	**HW030+NMRV-P063**	63D4/71A4	**HW030+NMRV-P063**	56C
0.60	5.6	1.8	2083	7.88	40	315.00	3798	1659	**HW030+NMRV-P075**	63D4/71A4	**HW030+NMRV-P075**	56C
0.67	5.3	2.0	2180	5.50	60	330.00	4450	1839	**HW040+NMRV-P090**	63D4/71A4	**HW040+NMRV-P090**	56C
1.13	5.3	3.4	2334	5.50	60	330.00	7968	2320	**HW040+NMRV-P110**	63D4/71A4	**HW040+NMRV-P110**	56C
0.68	4.6	2.1	2631	7.67	50	383.33	5417	1839	**HW040+NMRV-P090**	63D4/71A4	**HW040+NMRV-P090**	56C
0.98	4.6	3.0	2806	7.67	50	383.33	8294	2320	**HW040+NMRV-P110**	63D4/71A4	**HW040+NMRV-P110**	56C
0.47	4.4	1.4	2416	7.88	50	393.75	3416	1659	**HW030+NMRV-P075**	63D4/71A4	**HW030+NMRV-P075**	56C
0.61	4.0	1.9	2973	8.75	50	437.50	5525	1839	**HW040+NMRV-P090**	63D4/71A4	**HW040+NMRV-P090**	56C
0.77	4.0	2.3	2834	5.50	80	440.00	6637	2320	**HW040+NMRV-P110**	63D4/71A4	**HW040+NMRV-P110**	56C
0.53	3.8	1.6	2941	7.67	60	460.00	4725	1839	**HW040+NMRV-P090**	63D4/71A4	**HW040+NMRV-P090**	56C
0.89	3.8	2.7	3157	7.67	60	460.00	8491	2320	**HW040+NMRV-P110**	63D4/71A4	**HW040+NMRV-P110**	56C
0.40	3.7	1.2	2682	7.88	60	472.50	3239	1659	**HW030+NMRV-P075**	63D4/71A4	**HW030+NMRV-P075**	56C
0.48	3.3	1.4	3322	8.75	60	525.00	4811	1839	**HW040+NMRV-P090**	63D4/71A4	**HW040+NMRV-P090**	56C
0.74	3.3	2.2	3568	8.75	60	525.00	8008	2320	**HW040+NMRV-P110**	63D4/71A4	**HW040+NMRV-P110**	56C
0.35	2.9	1.1	3555	7.67	80	613.33	3771	1839	**HW040+NMRV-P090**	63D4/71A4	**HW040+NMRV-P090**	56C
0.60	2.9	1.8	3843	7.67	80	613.33	7022	2320	**HW040+NMRV-P110**	63D4/71A4	**HW040+NMRV-P110**	56C
0.54	2.5	1.6	4347	8.75	80	700.00	7143	2320	**HW040+NMRV-P110**	63D4/71A4	**HW040+NMRV-P110**	56C

0.33 HP

Maximum Power HP	Output Speed RPM	Service Factor sf	Output Torque in-lbs	Ratio Stage 1	Ratio Stage 2	Exact Ratio i	Max. Torque in-lbs	OHL Output Shaft lbs	Gearmotor		Gear Reducer	
									Reducer	Motor	Reducer	NEMA C-face
0.43	2.3	1.3	4363	7.67	100	766.67	5645	2320	**HW040+NMRV-P110**	63D4/71A4	**HW040+NMRV-P110**	56C
0.38	2.0	1.2	4921	8.75	100	875.00	5681	2320	**HW040+NMRV-P110**	63D4/71A4	**HW040+NMRV-P110**	56C

0.5 HP

Maximum Power HP	Output Speed RPM	Service Factor sf	Output Torque in-lbs	Ratio Stage 1	Ratio Stage 2	Exact Ratio i	Max. Torque in-lbs	OHL Output Shaft lbs	Gearmotor		Gear Reducer	
									Reducer	Motor	Reducer	NEMA C-face
0.74	79	1.5	320	2.94	7.5	22.08	475	393	**HA31+NMRV040**	71B4	**-**	-
1.27	79	2.5	324	2.94	7.5	22.08	820	540	**HA31+NMRV050**	71B4	**-**	-
2.31	79	4.6	333	2.94	7.5	22.08	1538	706	**HW030+NMRV-P063**	71B4	**HW030+NMRV-P063**	56C
0.75	74	1.5	349	4.75	5	23.75	522	403	**HA31+NMRV040**	71B4	**-**	-
0.86	74	1.7	349	4.75	5	23.75	603	553	**HA31+NMRV050**	71B4	**-**	-
0.72	69	1.4	373	5.10	5	25.50	534	413	**HA31+NMRV040**	71B4	**-**	-
0.84	69	1.7	373	5.10	5	25.50	628	566	**HA31+NMRV050**	71B4	**-**	-
1.96	60	3.9	430	3.87	7.5	29.00	1682	773	**HW030+NMRV-P063**	71B4	**HW030+NMRV-P063**	56C
0.60	59	1.2	416	2.94	10	29.44	499	433	**HA31+NMRV040**	71B4	**-**	-
1.13	59	2.3	422	2.94	10	29.44	956	594	**HA31+NMRV050**	71B4	**-**	-
0.62	56	1.2	458	6.30	5	31.50	565	443	**HA31+NMRV040**	71B4	**-**	-
0.68	56	1.4	458	6.30	5	31.50	623	608	**HA31+NMRV050**	71B4	**-**	-
0.55	49	1.1	505	4.75	7.5	35.63	558	461	**HA31+NMRV040**	71B4	**-**	-
0.86	49	1.7	511	4.75	7.5	35.63	883	633	**HA31+NMRV050**	71B4	**-**	-
1.55	45	3.1	547	3.87	10	38.67	1692	851	**HW030+NMRV-P063**	71B4	**HW030+NMRV-P063**	56C
0.50	43	1.0	576	5.45	7.5	40.91	580	483	**HA31+NMRV040**	71B4	**-**	-
0.79	43	1.6	583	5.45	7.5	40.91	918	663	**HA31+NMRV050**	71B4	**-**	-
0.80	40	1.6	595	2.94	15	44.17	956	680	**HA31+NMRV050**	71B4	**-**	-
1.38	40	2.8	607	2.94	15	44.17	1672	889	**HW030+NMRV-P063**	71B4	**HW030+NMRV-P063**	56C
0.82	37	1.6	665	4.75	10	47.50	1093	697	**HA31+NMRV050**	71B4	**-**	-
1.36	37	2.7	665	4.75	10	47.50	1813	911	**HW030+NMRV-P063**	71B4	**HW030+NMRV-P063**	56C
1.99	37	4.0	665	4.75	10	47.50	2646	1075	**HW030+NMRV-P075**	71B4	**HW030+NMRV-P075**	56C
0.74	32	1.5	759	5.45	10	54.55	1127	730	**HA31+NMRV050**	71B4	**-**	-
0.56	30	1.1	763	2.94	20	58.89	850	749	**HA31+NMRV050**	71B4	**-**	-
1.18	30	2.4	778	3.87	15	58.00	1829	974	**HW030+NMRV-P063**	71B4	**HW030+NMRV-P063**	56C
1.87	30	3.7	778	3.87	15	58.00	2909	1149	**HW030+NMRV-P075**	71B4	**HW030+NMRV-P075**	56C
0.66	28	1.3	872	6.30	10	63.00	1157	766	**HA31+NMRV050**	71B4	**-**	-
0.58	25	1.2	930	4.75	15	71.25	1086	798	**HA31+NMRV050**	71B4	**-**	-
1.04	25	2.1	942	4.75	15	71.25	1960	1043	**HW030+NMRV-P063**	71B4	**HW030+NMRV-P063**	56C
1.65	25	3.3	942	4.75	15	71.25	3117	1231	**HW030+NMRV-P075**	71B4	**HW030+NMRV-P075**	56C
0.91	23	1.8	995	3.87	20	77.33	1816	1072	**HW030+NMRV-P063**	71B4	**HW030+NMRV-P063**	56C
1.54	23	3.1	995	3.87	20	77.33	3057	1265	**HW030+NMRV-P075**	71B4	**HW030+NMRV-P075**	56C
1.90	23	3.8	1035	3.11	25	77.63	3927	1401	**HW040+NMRV-P090**	71B4	**HW040+NMRV-P090**	56C
0.52	22	1.0	1082	7.88	10	78.75	1128	825	**HA31+NMRV050**	71B4	**-**	-
0.96	21	1.9	1073	5.45	15	81.82	2053	1092	**HW030+NMRV-P063**	71B4	**HW030+NMRV-P063**	56C
1.52	21	3.0	1073	5.45	15	81.82	3264	1289	**HW030+NMRV-P075**	71B4	**HW030+NMRV-P075**	56C
0.86	20	1.7	1035	2.94	30	88.33	1778	1120	**HW030+NMRV-P063**	71B4	**HW030+NMRV-P063**	56C
1.39	20	2.8	1035	2.94	30	88.33	2873	1322	**HW030+NMRV-P075**	71B4	**HW030+NMRV-P075**	56C
0.83	18	1.7	1200	4.75	20	95.00	1997	1148	**HW030+NMRV-P063**	71B4	**HW030+NMRV-P063**	56C
1.40	18	2.8	1200	4.75	20	95.00	3366	1355	**HW030+NMRV-P075**	71B4	**HW030+NMRV-P075**	56C
0.77	16	1.5	1362	5.45	20	109.09	2099	1202	**HW030+NMRV-P063**	71B4	**HW030+NMRV-P063**	56C
1.29	16	2.6	1362	5.45	20	109.09	3525	1419	**HW030+NMRV-P075**	71B4	**HW030+NMRV-P075**	56C
1.82	16	3.6	1461	5.50	20	110.00	5319	1574	**HW040+NMRV-P090**	71B4	**HW040+NMRV-P090**	56C

0.5 HP

Maximum Power HP	Output Speed RPM	Service Factor sf	Output Torque in-lbs	Ratio Stage 1	Ratio Stage 2	Exact Ratio i	Max. Torque in-lbs	OHL Output Shaft lbs	Gearmotor		Gear Reducer	
									Reducer	Motor	Reducer	NEMA C-face
0.76	15	1.5	1522	7.88	15	118.13	2320	1234	**HW030+NMRV-P063**	71B4	**HW030+NMRV-P063**	56C
1.20	15	2.4	1312	3.87	30	116.00	3144	1448	**HW030+NMRV-P075**	71B4	**HW030+NMRV-P075**	56C
1.76	14	3.5	1543	4.20	30	126.00	5445	1647	**HW040+NMRV-P090**	71B4	**HW040+NMRV-P090**	56C
0.59	13	1.2	1632	5.45	25	136.36	1913	1295	**HW030+NMRV-P063**	71B4	**HW030+NMRV-P063**	56C
0.98	13	2.0	1632	5.45	25	136.36	3183	1528	**HW030+NMRV-P075**	71B4	**HW030+NMRV-P075**	56C
1.49	13	3.0	1754	5.50	25	137.50	5235	1696	**HW040+NMRV-P090**	71B4	**HW040+NMRV-P090**	56C
0.66	12	1.3	1577	4.75	30	142.50	2085	1314	**HW030+NMRV-P063**	71B4	**HW030+NMRV-P063**	56C
1.07	12	2.1	1577	4.75	30	142.50	3369	1551	**HW030+NMRV-P075**	71B4	**HW030+NMRV-P075**	56C
0.61	11	1.2	1788	5.45	30	163.64	2184	1376	**HW030+NMRV-P063**	71B4	**HW030+NMRV-P063**	56C
0.60	11	1.2	1922	7.88	20	157.50	2308	1358	**HW030+NMRV-P063**	71B4	**HW030+NMRV-P063**	56C
0.94	11	1.9	1638	3.87	40	154.67	3081	1594	**HW030+NMRV-P075**	71B4	**HW030+NMRV-P075**	56C
0.99	11	2.0	1788	5.45	30	163.64	3528	1624	**HW030+NMRV-P075**	71B4	**HW030+NMRV-P075**	56C
1.18	11	2.4	1758	3.11	50	155.26	4139	1766	**HW040+NMRV-P090**	71B4	**HW040+NMRV-P090**	56C
1.51	11	3.0	1974	5.50	30	165.00	5957	1802	**HW040+NMRV-P090**	71B4	**HW040+NMRV-P090**	56C
2.00	11	4.0	1833	3.11	50	155.26	7326	2231	**HW040+NMRV-P110**	71B4	**HW040+NMRV-P110**	56C
0.73	9.9	1.5	1712	2.94	60	176.67	2492	1659	**HW030+NMRV-P075**	71B4	**HW030+NMRV-P075**	56C
0.93	9.4	1.9	1980	3.11	60	186.32	3700	1839	**HW040+NMRV-P090**	71B4	**HW040+NMRV-P090**	56C
1.55	9.4	3.1	2109	3.11	60	186.32	6543	2320	**HW040+NMRV-P110**	71B4	**HW040+NMRV-P110**	56C
0.76	8.9	1.5	2300	7.88	25	196.88	3508	1659	**HW030+NMRV-P075**	71B4	**HW030+NMRV-P075**	56C
0.78	8.0	1.6	2210	5.45	40	218.18	3457	1659	**HW030+NMRV-P075**	71B4	**HW030+NMRV-P075**	56C
1.11	8.0	2.2	2441	5.50	40	220.00	5432	1839	**HW040+NMRV-P090**	71B4	**HW040+NMRV-P090**	56C
1.92	8.0	3.8	2570	5.50	40	220.00	9867	2320	**HW040+NMRV-P110**	71B4	**HW040+NMRV-P110**	56C
0.79	7.4	1.6	2514	7.88	30	236.25	3987	1659	**HW030+NMRV-P075**	71B4	**HW030+NMRV-P075**	56C
0.81	6.9	1.6	2549	4.20	60	252.00	4149	1839	**HW040+NMRV-P090**	71B4	**HW040+NMRV-P090**	56C
1.36	6.9	2.7	2724	4.20	60	252.00	7396	2320	**HW040+NMRV-P110**	71B4	**HW040+NMRV-P110**	56C
0.62	6.4	1.2	2555	5.45	50	272.73	3190	1659	**HW030+NMRV-P075**	71B4	**HW030+NMRV-P075**	56C
0.88	6.4	1.8	2879	5.50	50	275.00	5075	1839	**HW040+NMRV-P090**	71B4	**HW040+NMRV-P090**	56C
1.49	6.4	3.0	3051	5.50	50	275.00	9111	2320	**HW040+NMRV-P110**	71B4	**HW040+NMRV-P110**	56C
0.82	5.7	1.6	3155	6.09	50	304.55	5192	1839	**HW040+NMRV-P090**	71B4	**HW040+NMRV-P090**	56C
1.39	5.7	2.8	3351	6.09	50	304.55	9335	2320	**HW040+NMRV-P110**	71B4	**HW040+NMRV-P110**	56C
0.62	5.6	1.2	3083	7.88	40	315.00	3798	1659	**HW030+NMRV-P075**	71B4	**HW030+NMRV-P075**	56C
0.69	5.3	1.4	3226	5.50	60	330.00	4450	1839	**HW040+NMRV-P090**	71B4	**HW040+NMRV-P090**	56C
1.15	5.3	2.3	3455	5.50	60	330.00	7968	2320	**HW040+NMRV-P110**	71B4	**HW040+NMRV-P110**	56C
0.70	4.6	1.4	3893	7.67	50	383.33	5417	1839	**HW040+NMRV-P090**	71B4	**HW040+NMRV-P090**	56C
1.00	4.6	2.0	4153	7.67	50	383.33	8294	2320	**HW040+NMRV-P110**	71B4	**HW040+NMRV-P110**	56C
0.63	4.0	1.3	4401	8.75	50	437.50	5525	1839	**HW040+NMRV-P090**	71B4	**HW040+NMRV-P090**	56C
0.79	4.0	1.6	4195	5.50	80	440.00	6637	2320	**HW040+NMRV-P110**	71B4	**HW040+NMRV-P110**	56C
0.54	3.8	1.1	4353	7.67	60	460.00	4725	1839	**HW040+NMRV-P090**	71B4	**HW040+NMRV-P090**	56C
0.91	3.8	1.8	4672	7.67	60	460.00	8491	2320	**HW040+NMRV-P110**	71B4	**HW040+NMRV-P110**	56C
0.76	3.3	1.5	5281	8.75	60	525.00	8008	2320	**HW040+NMRV-P110**	71B4	**HW040+NMRV-P110**	56C
0.62	2.9	1.2	5688	7.67	80	613.33	7022	2320	**HW040+NMRV-P110**	71B4	**HW040+NMRV-P110**	56C
0.56	2.5	1.1	6434	8.75	80	700.00	7143	2320	**HW040+NMRV-P110**	71B4	**HW040+NMRV-P110**	56C

0.75 HP

Maximum Power HP	Output Speed RPM	Service Factor sf	Output Torque in-lbs	Ratio Stage 1	Ratio Stage 2	Exact Ratio i	Max. Torque in-lbs	OHL Output Shaft lbs	Gearmotor		Gear Reducer	
									Reducer	Motor	Reducer	NEMA C-face
1.28	79	1.7	481	2.94	7.5	22.08	820	540	**HA31+NMRV050**	71C4/80A4	**-**	-
2.33	79	3.1	495	2.94	7.5	22.08	1538	706	**HW030+NMRV-P063**	71C4/80A4	**HW030+NMRV-P063**	56C
0.76	74	1.0	518	4.75	5	23.75	522	403	**HA31+NMRV040**	71C4/80A4	**-**	-
0.87	74	1.2	518	4.75	5	23.75	603	553	**HA31+NMRV050**	71C4/80A4	**-**	-

0.75 HP

Maximum Power HP	Output Speed RPM	Service Factor sf	Output Torque in-lbs	Ratio Stage 1	Ratio Stage 2	Exact Ratio i	Max. Torque in-lbs	OHL Output Shaft lbs	Gearmotor		Gear Reducer	
									Reducer	Motor	Reducer	NEMA C-face
0.85	69	1.1	555	5.10	5	25.50	628	566	**HA31+NMRV050**	71C4	**-**	-
1.97	60	2.6	639	3.87	7.5	29.00	1682	773	**HW030+NMRV-P063**	71C4/80A4	**HW030+NMRV-P063**	56C
2.79	60	3.7	639	3.87	7.5	29.00	2377	912	**HW030+NMRV-P075**	71C4/80A4	**HW030+NMRV-P075**	56C
1.14	59	1.5	628	2.94	10	29.44	956	594	**HA31+NMRV050**	71C4/80A4	**-**	-
0.87	49	1.2	759	4.75	7.5	35.63	883	633	**HA31+NMRV050**	71C4/80A4	**-**	-
1.56	45	2.1	813	3.87	10	38.67	1692	851	**HW030+NMRV-P063**	71C4/80A4	**HW030+NMRV-P063**	56C
2.28	45	3.0	813	3.87	10	38.67	2469	1004	**HW030+NMRV-P075**	71C4/80A4	**HW030+NMRV-P075**	56C
0.79	43	1.1	867	5.45	7.5	40.91	918	663	**HA31+NMRV050**	71C4	**-**	-
0.81	40	1.1	885	2.94	15	44.17	956	680	**HA31+NMRV050**	71C4/80A4	**-**	-
1.39	40	1.9	902	2.94	15	44.17	1672	889	**HW030+NMRV-P063**	71C4/80A4	**HW030+NMRV-P063**	56C
2.21	40	2.9	902	2.94	15	44.17	2658	1049	**HW030+NMRV-P075**	71C4/80A4	**HW030+NMRV-P075**	56C
0.83	37	1.1	988	4.75	10	47.50	1093	697	**HA31+NMRV050**	71C4/80A4	**-**	-
1.38	37	1.8	988	4.75	10	47.50	1813	911	**HW030+NMRV-P063**	71C4/80A4	**HW030+NMRV-P063**	56C
2.01	37	2.7	988	4.75	10	47.50	2646	1075	**HW030+NMRV-P075**	71C4/80A4	**HW030+NMRV-P075**	56C
1.19	30	1.6	1157	3.87	15	58.00	1829	974	**HW030+NMRV-P063**	71C4/80A4	**HW030+NMRV-P063**	56C
1.89	30	2.5	1157	3.87	15	58.00	2909	1149	**HW030+NMRV-P075**	71C4/80A4	**HW030+NMRV-P075**	56C
2.89	28	3.9	1314	4.20	15	63.00	5069	1307	**HW040+NMRV-P090**	71C4/80A4	**HW040+NMRV-P090**	56C
1.05	25	1.4	1400	4.75	15	71.25	1960	1043	**HW030+NMRV-P063**	71C4/80A4	**HW030+NMRV-P063**	56C
1.67	25	2.2	1400	4.75	15	71.25	3117	1231	**HW030+NMRV-P075**	71C4/80A4	**HW030+NMRV-P075**	56C
0.92	23	1.2	1480	3.87	20	77.33	1816	1072	**HW030+NMRV-P063**	71C4/80A4	**HW030+NMRV-P063**	56C
1.55	23	2.1	1480	3.87	20	77.33	3057	1265	**HW030+NMRV-P075**	71C4/80A4	**HW030+NMRV-P075**	56C
1.92	23	2.6	1538	3.11	25	77.63	3927	1401	**HW040+NMRV-P090**	71C4/80A4	**HW040+NMRV-P090**	56C
0.97	21	1.3	1595	5.45	15	81.82	2053	1092	**HW030+NMRV-P063**	71C4/80A4	**HW030+NMRV-P063**	56C
1.53	21	2.0	1595	5.45	15	81.82	3264	1289	**HW030+NMRV-P075**	71C4/80A4	**HW030+NMRV-P075**	56C
2.16	21	2.9	1687	4.20	20	84.00	4862	1439	**HW040+NMRV-P090**	71C4/80A4	**HW040+NMRV-P090**	56C
0.87	20	1.2	1539	2.94	30	88.33	1778	1120	**HW030+NMRV-P063**	71C4/80A4	**HW030+NMRV-P063**	56C
1.40	20	1.9	1539	2.94	30	88.33	2873	1322	**HW030+NMRV-P075**	71C4/80A4	**HW030+NMRV-P075**	56C
2.10	19	2.8	1755	3.11	30	93.16	4924	1489	**HW040+NMRV-P090**	71C4/80A4	**HW040+NMRV-P090**	56C
0.84	18	1.1	1783	4.75	20	95.00	1997	1148	**HW030+NMRV-P063**	71C4/80A4	**HW030+NMRV-P063**	56C
1.42	18	1.9	1783	4.75	20	95.00	3366	1355	**HW030+NMRV-P075**	71C4/80A4	**HW030+NMRV-P075**	56C
0.78	16	1.0	2025	5.45	20	109.09	2099	1202	**HW030+NMRV-P063**	71C4/80A4	**HW030+NMRV-P063**	56C
1.31	16	1.7	2025	5.45	20	109.09	3525	1419	**HW030+NMRV-P075**	71C4/80A4	**HW030+NMRV-P075**	56C
1.84	16	2.4	2171	5.50	20	110.00	5319	1574	**HW040+NMRV-P090**	71C4/80A4	**HW040+NMRV-P090**	56C
0.77	15	1.0	2262	7.88	15	118.13	2320	1234	**HW030+NMRV-P063**	71C4/80A4	**HW030+NMRV-P063**	56C
1.21	15	1.6	1950	3.87	30	116.00	3144	1448	**HW030+NMRV-P075**	71C4/80A4	**HW030+NMRV-P075**	56C
1.78	14	2.4	2294	4.20	30	126.00	5445	1647	**HW040+NMRV-P090**	71C4/80A4	**HW040+NMRV-P090**	56C
0.98	13	1.3	2426	5.45	25	136.36	3183	1528	**HW030+NMRV-P075**	71C4/80A4	**HW030+NMRV-P075**	56C
1.51	13	2.0	2608	5.50	25	137.50	5235	1696	**HW040+NMRV-P090**	71C4/80A4	**HW040+NMRV-P090**	56C
2.29	13	3.1	2714	5.50	25	137.50	8302	2143	**HW040+NMRV-P110**	71C4/80A4	**HW040+NMRV-P110**	56C
1.08	12	1.4	2344	4.75	30	142.50	3369	1551	**HW030+NMRV-P075**	71C4/80A4	**HW030+NMRV-P075**	56C
0.95	11	1.3	2435	3.87	40	154.67	3081	1594	**HW030+NMRV-P075**	71C4/80A4	**HW030+NMRV-P075**	56C
1.00	11	1.3	2658	5.45	30	163.64	3528	1624	**HW030+NMRV-P075**	71C4/80A4	**HW030+NMRV-P075**	56C
1.19	11	1.6	2613	3.11	50	155.26	4139	1766	**HW040+NMRV-P090**	71C4/80A4	**HW040+NMRV-P090**	56C
1.52	11	2.0	2934	5.50	30	165.00	5957	1802	**HW040+NMRV-P090**	71C4/80A4	**HW040+NMRV-P090**	56C
2.02	11	2.7	2724	3.11	50	155.26	7326	2231	**HW040+NMRV-P110**	71C4/80A4	**HW040+NMRV-P110**	56C
2.25	10	3.0	3003	4.20	40	168.00	8990	2291	**HW040+NMRV-P110**	71C4/80A4	**HW040+NMRV-P110**	56C
0.94	9.4	1.3	2943	3.11	60	186.32	3700	1839	**HW040+NMRV-P090**	71C4/80A4	**HW040+NMRV-P090**	56C
1.57	9.4	2.1	3135	3.11	60	186.32	6543	2320	**HW040+NMRV-P110**	71C4/80A4	**HW040+NMRV-P110**	56C
0.77	8.9	1.0	3419	7.88	25	196.88	3508	1659	**HW030+NMRV-P075**	71C4/80A4	**HW030+NMRV-P075**	56C
0.79	8.0	1.1	3286	5.45	40	218.18	3457	1659	**HW030+NMRV-P075**	71C4/80A4	**HW030+NMRV-P075**	56C
1.12	8.0	1.5	3628	5.50	40	220.00	5432	1839	**HW040+NMRV-P090**	71C4/80A4	**HW040+NMRV-P090**	56C
1.94	8.0	2.6	3820	5.50	40	220.00	9867	2320	**HW040+NMRV-P110**	71C4/80A4	**HW040+NMRV-P110**	56C
0.80	7.4	1.1	3738	7.88	30	236.25	3987	1659	**HW030+NMRV-P075**	71C4/80A4	**HW030+NMRV-P075**	56C
0.82	6.9	1.1	3790	4.20	60	252.00	4149	1839	**HW040+NMRV-P090**	71C4/80A4	**HW040+NMRV-P090**	56C

0.75 HP

Maximum Power HP	Output Speed RPM	Service Factor sf	Output Torque in-lbs	Ratio Stage 1	Ratio Stage 2	Exact Ratio i	Max. Torque in-lbs	OHL Output Shaft lbs	Gearmotor		Gear Reducer	
									Reducer	Motor	Reducer	NEMA C-face
1.37	6.9	1.8	4049	4.20	60	252.00	7396	2320	**HW040+NMRV-P110**	71C4/80A4	**HW040+NMRV-P110**	56C
0.89	6.4	1.2	4279	5.50	50	275.00	5075	1839	**HW040+NMRV-P090**	71C4/80A4	**HW040+NMRV-P090**	56C
1.51	6.4	2.0	4535	5.50	50	275.00	9111	2320	**HW040+NMRV-P110**	71C4/80A4	**HW040+NMRV-P110**	56C
0.83	5.7	1.1	4691	6.09	50	304.55	5192	1839	**HW040+NMRV-P090**	71C4/80A4	**HW040+NMRV-P090**	56C
1.41	5.7	1.9	4982	6.09	50	304.55	9335	2320	**HW040+NMRV-P110**	71C4/80A4	**HW040+NMRV-P110**	56C
1.16	5.3	1.6	5135	5.50	60	330.00	7968	2320	**HW040+NMRV-P110**	71C4/80A4	**HW040+NMRV-P110**	56C
1.01	4.6	1.3	6173	7.67	50	383.33	8294	2320	**HW040+NMRV-P110**	71C4/80A4	**HW040+NMRV-P110**	56C
0.80	4.0	1.1	6235	5.50	80	440.00	6637	2320	**HW040+NMRV-P110**	71C4/80A4	**HW040+NMRV-P110**	56C
0.92	3.8	1.2	6945	7.67	60	460.00	8491	2320	**HW040+NMRV-P110**	71C4/80A4	**HW040+NMRV-P110**	56C
0.77	3.3	1.0	7850	8.75	60	525.00	8008	2320	**HW040+NMRV-P110**	71C4	**HW040+NMRV-P110**	56C

1 HP

Maximum Power HP	Output Speed RPM	Service Factor sf	Output Torque in-lbs	Ratio Stage 1	Ratio Stage 2	Exact Ratio i	Max. Torque in-lbs	OHL Output Shaft lbs	Gearmotor		Gear Reducer	
									Reducer	Motor	Reducer	NEMA C-face
1.25	79	1.3	656	2.94	7.5	22.08	820	540	**HA31+NMRV050**	80B4	**-**	-
2.28	79	2.3	675	2.94	7.5	22.08	1538	706	**HW030+NMRV-P063**	80B4	**HW030+NMRV-P063**	56C/143/145TC
3.16	79	3.2	675	2.94	7.5	22.08	2133	833	**HW030+NMRV-P075**	80B4	**HW030+NMRV-P075**	56C/143/145TC
1.93	60	1.9	872	3.87	7.5	29.00	1682	773	**HW030+NMRV-P063**	80B4	**HW030+NMRV-P063**	56C/143/145TC
2.73	60	2.7	872	3.87	7.5	29.00	2377	912	**HW030+NMRV-P075**	80B4	**HW030+NMRV-P075**	56C/143/145TC
1.12	59	1.1	856	2.94	10	29.44	956	594	**HA31+NMRV050**	80B4	**-**	-
1.53	45	1.5	1108	3.87	10	38.67	1692	851	**HW030+NMRV-P063**	80B4	**HW030+NMRV-P063**	56C/143/145TC
2.23	45	2.2	1108	3.87	10	38.67	2469	1004	**HW030+NMRV-P075**	80B4	**HW030+NMRV-P075**	56C/143/145TC
3.52	42	3.5	1243	4.20	10	42.00	4373	1142	**HW040+NMRV-P090**	80B4	**HW040+NMRV-P090**	56C/143/145TC
3.52	42	3.5	1243	4.20	10	42.00	4373	1443	**HW040+NMRV-P110**	80B4	**HW040+NMRV-P110**	56C/143/145TC
1.36	40	1.4	1231	2.94	15	44.17	1672	889	**HW030+NMRV-P063**	80B4	**HW030+NMRV-P063**	56C/143/145TC
2.16	40	2.2	1231	2.94	15	44.17	2658	1049	**HW030+NMRV-P075**	80B4	**HW030+NMRV-P075**	56C/143/145TC
3.38	38	3.4	1357	3.11	15	46.58	4584	1182	**HW040+NMRV-P090**	80B4	**HW040+NMRV-P090**	56C/143/145TC
1.35	37	1.3	1347	4.75	10	47.50	1813	911	**HW030+NMRV-P063**	80B4	**HW030+NMRV-P063**	56C/143/145TC
1.96	37	2.0	1347	4.75	10	47.50	2646	1075	**HW030+NMRV-P075**	80B4	**HW030+NMRV-P075**	56C/143/145TC
1.16	30	1.2	1578	3.87	15	58.00	1829	974	**HW030+NMRV-P063**	80B4	**HW030+NMRV-P063**	56C/143/145TC
1.84	30	1.8	1578	3.87	15	58.00	2909	1149	**HW030+NMRV-P075**	80B4	**HW030+NMRV-P075**	56C/143/145TC
2.83	28	2.8	1791	4.20	15	63.00	5069	1307	**HW040+NMRV-P090**	80B4	**HW040+NMRV-P090**	56C/143/145TC
3.88	28	3.9	1787	3.11	20	62.11	6932	1644	**HW040+NMRV-P110**	80B4	**HW040+NMRV-P110**	56C/143/145TC
1.03	25	1.0	1910	4.75	15	71.25	1960	1043	**HW030+NMRV-P063**	80B4	**HW030+NMRV-P063**	56C/143/145TC
1.63	25	1.6	1910	4.75	15	71.25	3117	1231	**HW030+NMRV-P075**	80B4	**HW030+NMRV-P075**	56C/143/145TC
1.52	23	1.5	2018	3.87	20	77.33	3057	1265	**HW030+NMRV-P075**	80B4	**HW030+NMRV-P075**	56C/143/145TC
1.87	23	1.9	2097	3.11	25	77.63	3927	1401	**HW040+NMRV-P090**	80B4	**HW040+NMRV-P090**	56C/143/145TC
3.37	23	3.4	2179	3.11	25	77.63	7335	1771	**HW040+NMRV-P110**	80B4	**HW040+NMRV-P110**	56C/143/145TC
1.50	21	1.5	2175	5.45	15	81.82	3264	1289	**HW030+NMRV-P075**	80B4	**HW030+NMRV-P075**	56C/143/145TC
2.11	21	2.1	2300	4.20	20	84.00	4862	1439	**HW040+NMRV-P090**	80B4	**HW040+NMRV-P090**	56C/143/145TC
3.52	21	3.5	2359	4.20	20	84.00	8301	1818	**HW040+NMRV-P110**	80B4	**HW040+NMRV-P110**	56C/143/145TC
1.37	20	1.4	2098	2.94	30	88.33	2873	1322	**HW030+NMRV-P075**	80B4	**HW030+NMRV-P075**	56C/143/145TC
2.06	19	2.1	2393	3.11	30	93.16	4924	1489	**HW040+NMRV-P090**	80B4	**HW040+NMRV-P090**	56C/143/145TC
3.34	19	3.3	2432	3.11	30	93.16	8117	1882	**HW040+NMRV-P110**	80B4	**HW040+NMRV-P110**	56C/143/145TC
1.38	18	1.4	2431	4.75	20	95.00	3366	1355	**HW030+NMRV-P075**	80B4	**HW030+NMRV-P075**	56C/143/145TC
3.12	17	3.1	2875	4.20	25	105.00	8976	1958	**HW040+NMRV-P110**	80B4	**HW040+NMRV-P110**	56C/143/145TC
1.28	16	1.3	2762	5.45	20	109.09	3525	1419	**HW030+NMRV-P075**	80B4	**HW030+NMRV-P075**	56C/143/145TC
1.80	16	1.8	2961	5.50	20	110.00	5319	1574	**HW040+NMRV-P090**	80B4	**HW040+NMRV-P090**	56C/143/145TC
1.18	15	1.2	2660	3.87	30	116.00	3144	1448	**HW030+NMRV-P075**	80B4	**HW030+NMRV-P075**	56C/143/145TC
1.74	14	1.7	3128	4.20	30	126.00	5445	1647	**HW040+NMRV-P090**	80B4	**HW040+NMRV-P090**	56C/143/145TC

1 HP

Maximum Power HP	Output Speed RPM	Service Factor sf	Output Torque in-lbs	Ratio Stage 1	Ratio Stage 2	Exact Ratio i	Max. Torque in-lbs	OHL Output Shaft lbs	Gearmotor		Gear Reducer	
									Reducer	Motor	Reducer	NEMA C-face
3.11	14	3.1	3160	4.20	30	126.00	9812	2081	**HW040+NMRV-P110**	80B4	**HW040+NMRV-P110**	56C/143/145TC
1.47	13	1.5	3556	5.50	25	137.50	5235	1696	**HW040+NMRV-P090**	80B4	**HW040+NMRV-P090**	56C/143/145TC
2.24	13	2.2	3701	5.50	25	137.50	8302	2143	**HW040+NMRV-P110**	80B4	**HW040+NMRV-P110**	56C/143/145TC
1.05	12	1.1	3196	4.75	30	142.50	3369	1551	**HW030+NMRV-P075**	80B4	**HW030+NMRV-P075**	56C/143/145TC
1.16	11	1.2	3563	3.11	50	155.26	4139	1766	**HW040+NMRV-P090**	80B4	**HW040+NMRV-P090**	56C/143/145TC
1.49	11	1.5	4000	5.50	30	165.00	5957	1802	**HW040+NMRV-P090**	80B4	**HW040+NMRV-P090**	56C/143/145TC
1.97	11	2.0	3715	3.11	50	155.26	7326	2231	**HW040+NMRV-P110**	80B4	**HW040+NMRV-P110**	56C/143/145TC
2.20	10	2.2	4095	4.20	40	168.00	8990	2291	**HW040+NMRV-P110**	80B4	**HW040+NMRV-P110**	56C/143/145TC
1.53	9.4	1.5	4275	3.11	60	186.32	6543	2320	**HW040+NMRV-P110**	80B4	**HW040+NMRV-P110**	56C/143/145TC
1.10	8.0	1.1	4947	5.50	40	220.00	5432	1839	**HW040+NMRV-P090**	80B4	**HW040+NMRV-P090**	56C/143/145TC
1.89	8.0	1.9	5210	5.50	40	220.00	9867	2320	**HW040+NMRV-P110**	80B4	**HW040+NMRV-P110**	56C/143/145TC
1.34	6.9	1.3	5522	4.20	60	252.00	7396	2320	**HW040+NMRV-P110**	80B4	**HW040+NMRV-P110**	56C/143/145TC
1.47	6.4	1.5	6184	5.50	50	275.00	9111	2320	**HW040+NMRV-P110**	80B4	**HW040+NMRV-P110**	56C/143/145TC
1.37	5.7	1.4	6793	6.09	50	304.55	9335	2320	**HW040+NMRV-P110**	80B4	**HW040+NMRV-P110**	56C/143/145TC
1.14	5.3	1.1	7003	5.50	60	330.00	7968	2320	**HW040+NMRV-P110**	80B4	**HW040+NMRV-P110**	56C/143/145TC

1.5 HP

Maximum Power HP	Output Speed RPM	Service Factor sf	Output Torque in-lbs	Ratio Stage 1	Ratio Stage 2	Exact Ratio i	Max. Torque in-lbs	OHL Output Shaft lbs	Gearmotor		Gear Reducer	
									Reducer	Motor	Reducer	NEMA C-face
2.33	79	1.6	990	2.94	7.5	22.08	1538	706	**HW030+NMRV-P063**	80D4	**HW030+NMRV-P063**	56C/143/145TC
3.23	79	2.2	990	2.94	7.5	22.08	2133	833	**HW030+NMRV-P075**	80D4	**HW030+NMRV-P075**	56C/143/145TC
5.31	75	3.5	1038	3.11	7.5	23.29	3672	938	**HW040+NMRV-P090**	80D4/90S4	**HW040+NMRV-P090**	56C/143/145TC
5.31	75	3.5	1052	3.11	7.5	23.29	3723	1185	**HW040+NMRV-P110**	80D4/90S4	**HW040+NMRV-P110**	56C/143/145TC
1.97	60	1.3	1279	3.87	7.5	29.00	1682	773	**HW030+NMRV-P063**	80D4	**HW030+NMRV-P063**	56C/143/145TC
2.79	60	1.9	1279	3.87	7.5	29.00	2377	912	**HW030+NMRV-P075**	80D4	**HW030+NMRV-P075**	56C/143/145TC
4.46	56	3.0	1371	3.11	10	31.05	4074	1033	**HW040+NMRV-P090**	80D4/90S4	**HW040+NMRV-P090**	56C/143/145TC
5.31	56	3.5	1371	3.11	10	31.05	4851	1305	**HW040+NMRV-P110**	80D4/90S4	**HW040+NMRV-P110**	56C/143/145TC
1.56	45	1.0	1625	3.87	10	38.67	1692	851	**HW030+NMRV-P063**	80D4	**HW030+NMRV-P063**	56C/143/145TC
2.28	45	1.5	1625	3.87	10	38.67	2469	1004	**HW030+NMRV-P075**	80D4	**HW030+NMRV-P075**	56C/143/145TC
3.60	42	2.4	1823	4.20	10	42.00	4373	1142	**HW040+NMRV-P090**	80D4/90S4	**HW040+NMRV-P090**	56C/143/145TC
3.60	42	2.4	1823	4.20	10	42.00	4373	1443	**HW040+NMRV-P110**	80D4/90S4	**HW040+NMRV-P110**	56C/143/145TC
2.21	40	1.5	1805	2.94	15	44.17	2658	1049	**HW030+NMRV-P075**	80D4	**HW030+NMRV-P075**	56C/143/145TC
3.46	38	2.3	1990	3.11	15	46.58	4584	1182	**HW040+NMRV-P090**	80D4/90S4	**HW040+NMRV-P090**	56C/143/145TC
5.31	38	3.5	2014	3.11	15	46.58	7124	1494	**HW040+NMRV-P110**	80D4/90S4	**HW040+NMRV-P110**	56C/143/145TC
2.01	37	1.3	1976	4.75	10	47.50	2646	1075	**HW030+NMRV-P075**	80D4	**HW030+NMRV-P075**	56C/143/145TC
1.89	30	1.3	2314	3.87	15	58.00	2909	1149	**HW030+NMRV-P075**	80D4	**HW030+NMRV-P075**	56C/143/145TC
2.89	28	1.9	2627	4.20	15	63.00	5069	1307	**HW040+NMRV-P090**	80D4/90S4	**HW040+NMRV-P090**	56C/143/145TC
3.97	28	2.6	2621	3.11	20	62.11	6932	1644	**HW040+NMRV-P110**	80D4/90S4	**HW040+NMRV-P110**	56C/143/145TC
1.67	25	1.1	2801	4.75	15	71.25	3117	1231	**HW030+NMRV-P075**	80D4	**HW030+NMRV-P075**	56C/143/145TC
1.55	23	1.0	2959	3.87	20	77.33	3057	1265	**HW030+NMRV-P075**	80D4	**HW030+NMRV-P075**	56C/143/145TC
1.92	23	1.3	3076	3.11	25	77.63	3927	1401	**HW040+NMRV-P090**	80D4/90S4	**HW040+NMRV-P090**	56C/143/145TC
3.44	23	2.3	3196	3.11	25	77.63	7335	1771	**HW040+NMRV-P110**	80D4/90S4	**HW040+NMRV-P110**	56C/143/145TC
1.53	21	1.0	3190	5.45	15	81.82	3264	1289	**HW030+NMRV-P075**	80D4	**HW030+NMRV-P075**	56C/143/145TC
2.16	21	1.4	3373	4.20	20	84.00	4862	1439	**HW040+NMRV-P090**	80D4/90S4	**HW040+NMRV-P090**	56C/143/145TC
3.60	21	2.4	3460	4.20	20	84.00	8301	1818	**HW040+NMRV-P110**	80D4/90S4	**HW040+NMRV-P110**	56C/143/145TC
2.10	19	1.4	3509	3.11	30	93.16	4924	1489	**HW040+NMRV-P090**	80D4/90S4	**HW040+NMRV-P090**	56C/143/145TC
3.41	19	2.3	3567	3.11	30	93.16	8117	1882	**HW040+NMRV-P110**	80D4/90S4	**HW040+NMRV-P110**	56C/143/145TC
3.19	17	2.1	4217	4.20	25	105.00	8976	1958	**HW040+NMRV-P110**	80D4/90S4	**HW040+NMRV-P110**	56C/143/145TC
1.84	16	1.2	4343	5.50	20	110.00	5319	1574	**HW040+NMRV-P090**	80D4/90S4	**HW040+NMRV-P090**	56C/143/145TC
1.78	14	1.2	4587	4.20	30	126.00	5445	1647	**HW040+NMRV-P090**	80D4/90S4	**HW040+NMRV-P090**	56C/143/145TC

1.5 HP

Maximum Power HP	Output Speed RPM	Service Factor sf	Output Torque in-lbs	Ratio Stage 1	Ratio Stage 2	Exact Ratio i	Max. Torque in-lbs	OHL Output Shaft lbs	Gearmotor		Gear Reducer	
									Reducer	Motor	Reducer	NEMA C-face
3.18	14	2.1	4634	4.20	30	126.00	9812	2081	**HW040+NMRV-P110**	80D4/90S4	**HW040+NMRV-P110**	56C/143/145TC
1.51	13	1.0	5216	5.50	25	137.50	5235	1696	**HW040+NMRV-P090**	80D4/90S4	**HW040+NMRV-P090**	56C/143/145TC
2.29	13	1.5	5429	5.50	25	137.50	8302	2143	**HW040+NMRV-P110**	80D4/90S4	**HW040+NMRV-P110**	56C/143/145TC
1.52	11	1.0	5867	5.50	30	165.00	5957	1802	**HW040+NMRV-P090**	80D4/90S4	**HW040+NMRV-P090**	56C/143/145TC
2.02	11	1.3	5448	3.11	50	155.26	7326	2231	**HW040+NMRV-P110**	80D4/90S4	**HW040+NMRV-P110**	56C/143/145TC
2.25	10	1.5	6006	4.20	40	168.00	8990	2291	**HW040+NMRV-P110**	80D4/90S4	**HW040+NMRV-P110**	56C/143/145TC
1.57	9.4	1.0	6270	3.11	60	186.32	6543	2320	**HW040+NMRV-P110**	80D4/90S4	**HW040+NMRV-P110**	56C/143/145TC
1.94	8.0	1.3	7641	5.50	40	220.00	9867	2320	**HW040+NMRV-P110**	80D4/90S4	**HW040+NMRV-P110**	56C/143/145TC
1.51	6.4	1.0	9070	5.50	50	275.00	9111	2320	**HW040+NMRV-P110**	80D4/90S4	**HW040+NMRV-P110**	56C/143/145TC

2 HP

Maximum Power HP	Output Speed RPM	Service Factor sf	Output Torque in-lbs	Ratio Stage 1	Ratio Stage 2	Exact Ratio i	Max. Torque in-lbs	OHL Output Shaft lbs	Gearmotor		Gear Reducer	
									Reducer	Motor	Reducer	NEMA C-face
2.28	79	1.1	1350	2.94	7.5	22.08	1538	706	**-**	-	**HW030+NMRV-P063**	56C/143/145TC
3.16	79	1.6	1350	2.94	7.5	22.08	2133	833	**-**	-	**HW030+NMRV-P075**	56C/143/145TC
5.19	75	2.6	1415	3.11	7.5	23.29	3672	938	**HW040+NMRV-P090**	90LA4	**HW040+NMRV-P090**	56C/143/145TC
5.19	75	2.6	1435	3.11	7.5	23.29	3723	1185	**HW040+NMRV-P110**	90LA4	**HW040+NMRV-P110**	56C/143/145TC
2.73	60	1.4	1744	3.87	7.5	29.00	2377	912	**-**	-	**HW030+NMRV-P075**	56C/143/145TC
4.36	56	2.2	1870	3.11	10	31.05	4074	1033	**HW040+NMRV-P090**	90LA4	**HW040+NMRV-P090**	56C/143/145TC
5.19	56	2.6	1870	3.11	10	31.05	4851	1305	**HW040+NMRV-P110**	90LA4	**HW040+NMRV-P110**	56C/143/145TC
2.23	45	1.1	2217	3.87	10	38.67	2469	1004	**-**	-	**HW030+NMRV-P075**	56C/143/145TC
3.52	42	1.8	2485	4.20	10	42.00	4373	1142	**HW040+NMRV-P090**	90LA4	**HW040+NMRV-P090**	56C/143/145TC
3.52	42	1.8	2485	4.20	10	42.00	4373	1443	**HW040+NMRV-P110**	90LA4	**HW040+NMRV-P110**	56C/143/145TC
2.16	40	1.1	2461	2.94	15	44.17	2658	1049	**-**	-	**HW030+NMRV-P075**	56C/143/145TC
3.38	38	1.7	2713	3.11	15	46.58	4584	1182	**HW040+NMRV-P090**	90LA4	**HW040+NMRV-P090**	56C/143/145TC
5.19	38	2.6	2746	3.11	15	46.58	7124	1494	**HW040+NMRV-P110**	90LA4	**HW040+NMRV-P110**	56C/143/145TC
2.83	28	1.4	3583	4.20	15	63.00	5069	1307	**HW040+NMRV-P090**	90LA4	**HW040+NMRV-P090**	56C/143/145TC
3.88	28	1.9	3574	3.11	20	62.11	6932	1644	**HW040+NMRV-P110**	90LA4	**HW040+NMRV-P110**	56C/143/145TC
3.37	23	1.7	4358	3.11	25	77.63	7335	1771	**HW040+NMRV-P110**	90LA4	**HW040+NMRV-P110**	56C/143/145TC
2.11	21	1.1	4600	4.20	20	84.00	4862	1439	**HW040+NMRV-P090**	90LA4	**HW040+NMRV-P090**	56C/143/145TC
3.52	21	1.8	4718	4.20	20	84.00	8301	1818	**HW040+NMRV-P110**	90LA4	**HW040+NMRV-P110**	56C/143/145TC
2.06	19	1.0	4785	3.11	30	93.16	4924	1489	**HW040+NMRV-P090**	90LA4	**HW040+NMRV-P090**	56C/143/145TC
3.34	19	1.7	4865	3.11	30	93.16	8117	1882	**HW040+NMRV-P110**	90LA4	**HW040+NMRV-P110**	56C/143/145TC
3.12	17	1.6	5750	4.20	25	105.00	8976	1958	**HW040+NMRV-P110**	90LA4	**HW040+NMRV-P110**	56C/143/145TC
3.11	14	1.6	6319	4.20	30	126.00	9812	2081	**HW040+NMRV-P110**	90LA4	**HW040+NMRV-P110**	56C/143/145TC
2.24	13	1.1	7403	5.50	25	137.50	8302	2143	**HW040+NMRV-P110**	90LA4	**HW040+NMRV-P110**	56C/143/145TC
2.20	10	1.1	8189	4.20	40	168.00	8990	2291	**HW040+NMRV-P110**	90LA4	**HW040+NMRV-P110**	56C/143/145TC

3 HP

Maximum Power HP	Output Speed RPM	Service Factor sf	Output Torque in-lbs	Ratio Stage 1	Ratio Stage 2	Exact Ratio i	Max. Torque in-lbs	OHL Output Shaft lbs	Gearmotor		Gear Reducer	
									Reducer	Motor	Reducer	NEMA C-face
5.31	75	1.8	2075	3.11	7.5	23.29	3672	938	**-**	-	**HW040+NMRV-P090**	182/184TC
5.31	75	1.8	2105	3.11	7.5	23.29	3723	1185	**-**	-	**HW040+NMRV-P110**	182/184TC
4.46	56	1.5	2742	3.11	10	31.05	4074	1033	**-**	-	**HW040+NMRV-P090**	182/184TC
5.31	56	1.8	2742	3.11	10	31.05	4851	1305	**-**	-	**HW040+NMRV-P110**	182/184TC
3.60	42	1.2	3645	4.20	10	42.00	4373	1142	**-**	-	**HW040+NMRV-P090**	182/184TC

3 HP

Maximum Power **HP**	Output Speed **RPM**	Service Factor **sf**	Output Torque **in-lbs**	Ratio **Stage 1**	Ratio **Stage 2**	Exact Ratio **i**	Max. Torque **in-lbs**	OHL Output Shaft **lbs**	Gearmotor		Gear Reducer	
									Reducer	**Motor**	**Reducer**	**NEMA C-face**
3.60	42	1.2	3645	4.20	10	42.00	4373	1443	**-**	-	**HW040+NMRV-P110**	182/184TC
3.46	38	1.2	3979	3.11	15	46.58	4584	1182	**-**	-	**HW040+NMRV-P090**	182/184TC
5.31	38	1.8	4027	3.11	15	46.58	7124	1494	**-**	-	**HW040+NMRV-P110**	182/184TC
3.97	28	1.3	5242	3.11	20	62.11	6932	1644	**-**	-	**HW040+NMRV-P110**	182/184TC
3.44	23	1.1	6392	3.11	25	77.63	7335	1771	**-**	-	**HW040+NMRV-P110**	182/184TC
3.60	21	1.2	6920	4.20	20	84.00	8301	1818	**-**	-	**HW040+NMRV-P110**	182/184TC
3.41	19	1.1	7135	3.11	30	93.16	8117	1882	**-**	-	**HW040+NMRV-P110**	182/184TC
3.19	17	1.1	8433	4.20	25	105.00	8976	1958	**-**	-	**HW040+NMRV-P110**	182/184TC
3.18	14	1.1	9268	4.20	30	126.00	9812	2081	**-**	-	**HW040+NMRV-P110**	182/184TC

Helical Worm Gear Reducer Ratings - Input Speed 1140 rpm

Maximum Torque lbs*in	Output Speed RPM	Ratio i	Maximum Power HP	OHL		Gear Reducer	
				Output Shaft lbs	Input Shaft lbs	Motorized Input	Shaft Input
549	52	22.08	0.57	**417**	-	**HA31+NMRV040**	-
583	48	23.75	0.55	**494**	-	**HA31+NMRV040**	-
591	45	25.50	0.52	**494**	-	**HA31+NMRV040**	-
562	39	29.44	0.45	**459**	-	**HA31+NMRV040**	-
602	36	31.50	0.43	**494**	-	**HA31+NMRV040**	-
618	32	35.63	0.40	**566**	-	**HA31+NMRV040**	-
633	28	40.91	0.36	**566**	-	**HA31+NMRV040**	-
577	26	44.17	0.33	**525**	-	**HA31+NMRV040**	-
614	24	47.50	0.31	**622**	-	**HA31+NMRV040**	-
625	21	54.55	0.28	**622**	-	**HA31+NMRV040**	-
531	19	58.89	0.24	**578**	-	**HA31+NMRV040**	-
628	18	63.00	0.24	**622**	-	**HA31+NMRV040**	-
624	16	71.25	0.22	**713**	-	**HA31+NMRV040**	-
628	15	78.75	0.19	**622**	-	**HA31+NMRV040**	-
585	13	88.33	0.20	**661**	-	**HA31+NMRV040**	-
637	12	94.50	0.17	**713**	-	**HA31+NMRV040**	-
570	11	102.00	0.15	**784**	-	**HA31+NMRV040**	-
573	11	109.09	0.14	**784**	-	**HA31+NMRV040**	-
637	9.7	118.13	0.14	**713**	-	**HA31+NMRV040**	-
533	8.9	127.50	0.12	**785**	-	**HA31+NMRV040**	-
633	8	142.50	0.14	**785**	-	**HA31+NMRV040**	-
556	7.4	154.67	0.12	**785**	-	**HA31+NMRV040**	-
643	7	163.64	0.12	**785**	-	**HA31+NMRV040**	-
646	6	189.00	0.11	**785**	-	**HA31+NMRV040**	-
570	5.6	204.00	0.10	**785**	-	**HA31+NMRV040**	-
877	52	22.08	0.89	**572**	-	**HA31+NMRV050**	-
647	48	23.75	0.61	**678**	-	**HA31+NMRV050**	-
675	45	25.50	0.59	**678**	-	**HA31+NMRV050**	-
1080	39	29.44	0.85	**629**	-	**HA31+NMRV050**	-
673	36	31.50	0.48	**678**	-	**HA31+NMRV050**	-
948	32	35.63	0.61	**776**	-	**HA31+NMRV050**	-
987	28	40.91	0.55	**776**	-	**HA31+NMRV050**	-
1073	26	44.17	0.60	**721**	-	**HA31+NMRV050**	-
1184	24	47.50	0.59	**854**	-	**HA31+NMRV050**	-
1206	21	54.55	0.52	**854**	-	**HA31+NMRV050**	-
952	19	58.89	0.42	**793**	-	**HA31+NMRV050**	-
1213	18	63.00	0.45	**854**	-	**HA31+NMRV050**	-
1169	16	71.25	0.42	**978**	-	**HA31+NMRV050**	-
1213	15	78.75	0.36	**854**	-	**HA31+NMRV050**	-
1107	13	88.33	0.37	**908**	-	**HA31+NMRV050**	-
1195	12	94.50	0.32	**978**	-	**HA31+NMRV050**	-
1048	11	102.00	0.28	**1076**	-	**HA31+NMRV050**	-
1057	11	109.09	0.26	**1076**	-	**HA31+NMRV050**	-
1195	9.7	118.13	0.26	**978**	-	**HA31+NMRV050**	-
961	8.9	127.50	0.21	**1088**	-	**HA31+NMRV050**	-
1246	8	142.50	0.27	**1088**	-	**HA31+NMRV050**	-
1044	7.4	154.67	0.23	**1088**	-	**HA31+NMRV050**	-
1275	7	163.64	0.24	**1088**	-	**HA31+NMRV050**	-
1283	6	189.00	0.21	**1088**	-	**HA31+NMRV050**	-
1084	5.6	204.00	0.18	**1088**	-	**HA31+NMRV050**	-
1283	4.8	236.25	0.17	**1088**	-	**HA31+NMRV050**	-
1097	4.5	252.00	0.15	**1088**	-	**HA31+NMRV050**	-
1056	4.2	272.73	0.14	**1088**	-	**HA31+NMRV050**	-
908	4	285.00	0.13	**1088**	-	**HA31+NMRV050**	-
1062	3.6	315.00	0.13	**1088**	-	**HA31+NMRV050**	-

Maximum Torque lbs*in	Output Speed RPM	Ratio i	Maximum Power HP	OHL		Gear Reducer	
				Output Shaft lbs	Input Shaft lbs	Motorized Input	Shaft Input
1773	52	22.08	1.76	748	-	HW030+NMRV-P063	-
1941	39	29.00	1.49	1015	-	HW030+NMRV-P063	-
1951	30	38.67	1.18	1117	-	HW030+NMRV-P063	-
1928	26	44.17	1.06	942	-	HW030+NMRV-P063	-
2091	24	47.50	1.03	1117	-	HW030+NMRV-P063	-
2110	20	58.00	0.90	1278	-	HW030+NMRV-P063	-
2261	16	71.25	0.79	1278	-	HW030+NMRV-P063	-
2153	15	77.33	0.73	1407	-	HW030+NMRV-P063	-
2367	14	81.82	0.73	1278	-	HW030+NMRV-P063	-
2051	13	88.33	0.68	1187	-	HW030+NMRV-P063	-
2271	12	95.00	0.63	1407	-	HW030+NMRV-P063	-
2337	11	109.09	0.57	1407	-	HW030+NMRV-P063	-
2330	9.7	118.13	0.50	1278	-	HW030+NMRV-P063	-
2123	8.4	136.36	0.43	1410	-	HW030+NMRV-P063	-
2405	8	142.50	0.51	1410	-	HW030+NMRV-P063	-
2479	7.2	157.50	0.42	1407	-	HW030+NMRV-P063	-
2519	7	163.64	0.47	1410	-	HW030+NMRV-P063	-
1716	6.5	176.67	0.35	1410	-	HW030+NMRV-P063	-
2224	5.8	196.88	0.32	1410	-	HW030+NMRV-P063	-
2321	5.2	218.18	0.35	1410	-	HW030+NMRV-P063	-
2846	4.8	236.25	0.37	1410	-	HW030+NMRV-P063	-
2107	4.2	272.73	0.28	1410	-	HW030+NMRV-P063	-
2416	3.6	315.00	0.26	1410	-	HW030+NMRV-P063	-
2187	2.9	393.75	0.20	1410	-	HW030+NMRV-P063	-
2474	2.6	433.33	0.20	1410	-	HW030+NMRV-P063	-
1974	2.4	472.50	0.17	1410	-	HW030+NMRV-P063	-
2237	2.1	541.67	0.15	1410	-	HW030+NMRV-P063	-
2013	1.8	650.00	0.13	1410	-	HW030+NMRV-P063	-
1187	1.4	787.50	0.08	1410	-	HW030+NMRV-P063	-
1489	1.3	866.67	0.08	1410	-	HW030+NMRV-P063	-
1187	1.1	1083.33	0.06	1410	-	HW030+NMRV-P063	-
2506	52	22.08	2.51	882	-	HW030+NMRV-P075	-
2498	39	29.00	1.92	1198	-	HW030+NMRV-P075	-
2848	30	38.67	1.70	1318	-	HW030+NMRV-P075	-
3065	26	44.17	1.65	1112	-	HW030+NMRV-P075	-
3051	24	47.50	1.49	1318	-	HW030+NMRV-P075	-
3355	20	58.00	1.40	1509	-	HW030+NMRV-P075	-
3595	16	71.25	1.23	1509	-	HW030+NMRV-P075	-
3623	15	77.33	1.19	1659	-	HW030+NMRV-P075	-
3658	14	81.82	1.10	1509	-	HW030+NMRV-P075	-
3313	13	88.33	1.04	1401	-	HW030+NMRV-P075	-
3857	12	95.00	1.04	1659	-	HW030+NMRV-P075	-
3973	11	109.09	0.94	1659	-	HW030+NMRV-P075	-
3626	9.8	116.00	0.89	1659	-	HW030+NMRV-P075	-
3551	8.4	136.36	0.70	1659	-	HW030+NMRV-P075	-
3886	8	142.50	0.79	1659	-	HW030+NMRV-P075	-
3554	7.4	154.67	0.71	1659	-	HW030+NMRV-P075	-
4069	7	163.64	0.72	1659	-	HW030+NMRV-P075	-
2900	6.5	176.67	0.56	1659	-	HW030+NMRV-P075	-
3608	5.8	196.88	0.50	1659	-	HW030+NMRV-P075	-
3835	5.2	218.18	0.55	1659	-	HW030+NMRV-P075	-
4012	4.8	236.25	0.50	1659	-	HW030+NMRV-P075	-
3446	4.2	272.73	0.43	1659	-	HW030+NMRV-P075	-
4007	3.6	315.00	0.41	1659	-	HW030+NMRV-P075	-
3582	2.9	393.75	0.32	1659	-	HW030+NMRV-P075	-
3382	2.4	472.50	0.27	1659	-	HW030+NMRV-P075	-
3228	2.1	541.67	0.21	1659	-	HW030+NMRV-P075	-
3452	1.8	650.00	0.20	1659	-	HW030+NMRV-P075	-

Maximum Torque lbs*in	Output Speed RPM	Ratio i	Maximum Power HP	OHL		Gear Reducer	
				Output Shaft lbs	Input Shaft lbs	Motorized Input	Shaft Input
2021	1.4	787.50	0.12	**1659**	-	**HW030+NMRV-P075**	-
2587	1.3	866.67	0.13	**1659**	-	**HW030+NMRV-P075**	-
2049	1.1	1083.33	0.09	**1659**	-	**HW030+NMRV-P075**	-
3616	49	23.29	3.40	**976**	67	**HW040+NMRV-P090**	IHW040+NMRV-P090
4699	37	31.05	3.37	**1075**	90	**HW040+NMRV-P090**	IHW040+NMRV-P090
4392	27	42.00	2.36	**1458**	90	**HW040+NMRV-P090**	IHW040+NMRV-P090
5288	25	46.58	2.64	**1230**	90	**HW040+NMRV-P090**	IHW040+NMRV-P090
5847	18	63.00	2.19	**1669**	90	**HW040+NMRV-P090**	IHW040+NMRV-P090
4992	15	77.63	1.62	**1458**	90	**HW040+NMRV-P090**	IHW040+NMRV-P090
5608	14	84.00	1.64	**1838**	90	**HW040+NMRV-P090**	IHW040+NMRV-P090
5680	12	93.16	1.63	**1550**	90	**HW040+NMRV-P090**	IHW040+NMRV-P090
6135	10	110.00	1.38	**1838**	90	**HW040+NMRV-P090**	IHW040+NMRV-P090
6281	9	126.00	1.36	**1839**	90	**HW040+NMRV-P090**	IHW040+NMRV-P090
5925	8.3	137.50	1.11	**1839**	90	**HW040+NMRV-P090**	IHW040+NMRV-P090
4874	7.3	155.26	0.95	**1838**	90	**HW040+NMRV-P090**	IHW040+NMRV-P090
6871	6.9	165.00	1.16	**1839**	90	**HW040+NMRV-P090**	IHW040+NMRV-P090
4301	6.1	186.32	0.75	**1839**	90	**HW040+NMRV-P090**	IHW040+NMRV-P090
6265	5.2	220.00	0.85	**1839**	90	**HW040+NMRV-P090**	IHW040+NMRV-P090
4593	4.5	252.00	0.61	**1839**	90	**HW040+NMRV-P090**	IHW040+NMRV-P090
5498	4.1	275.00	0.64	**1839**	90	**HW040+NMRV-P090**	IHW040+NMRV-P090
5576	3.7	304.55	0.59	**1839**	90	**HW040+NMRV-P090**	IHW040+NMRV-P090
4789	3.5	330.00	0.50	**1839**	90	**HW040+NMRV-P090**	IHW040+NMRV-P090
5728	3	383.33	0.49	**1839**	90	**HW040+NMRV-P090**	IHW040+NMRV-P090
5800	2.6	437.50	0.44	**1839**	90	**HW040+NMRV-P090**	IHW040+NMRV-P090
4973	2.5	460.00	0.38	**1839**	90	**HW040+NMRV-P090**	IHW040+NMRV-P090
5031	2.2	525.00	0.34	**1839**	90	**HW040+NMRV-P090**	IHW040+NMRV-P090
3980	1.9	613.33	0.25	**1839**	90	**HW040+NMRV-P090**	IHW040+NMRV-P090
4035	1.6	700.00	0.22	**1839**	90	**HW040+NMRV-P090**	IHW040+NMRV-P090
3201	1.5	766.67	0.18	**1839**	90	**HW040+NMRV-P090**	IHW040+NMRV-P090
3227	1.3	875.00	0.16	**1839**	90	**HW040+NMRV-P090**	IHW040+NMRV-P090
3640	49	23.29	3.40	**1234**	67	**HW040+NMRV-P110**	IHW040+NMRV-P110
4740	37	31.05	3.40	**1358**	67	**HW040+NMRV-P110**	IHW040+NMRV-P110
4392	27	42.00	2.36	**1843**	112	**HW040+NMRV-P110**	IHW040+NMRV-P110
6902	25	46.58	3.40	**1554**	67	**HW040+NMRV-P110**	IHW040+NMRV-P110
8976	18	62.11	3.40	**1711**	112	**HW040+NMRV-P110**	IHW040+NMRV-P110
9530	15	77.63	2.96	**1843**	112	**HW040+NMRV-P110**	IHW040+NMRV-P110
8279	14	84.00	2.36	**2320**	112	**HW040+NMRV-P110**	IHW040+NMRV-P110
10385	12	93.16	2.95	**1958**	112	**HW040+NMRV-P110**	IHW040+NMRV-P110
10083	11	105.00	2.36	**2320**	112	**HW040+NMRV-P110**	IHW040+NMRV-P110
10901	9	126.00	2.36	**2320**	112	**HW040+NMRV-P110**	IHW040+NMRV-P110
8475	8.3	137.50	1.53	**2320**	112	**HW040+NMRV-P110**	IHW040+NMRV-P110
8755	7.3	155.26	1.62	**2320**	112	**HW040+NMRV-P110**	IHW040+NMRV-P110
10558	6.8	168.00	1.76	**2320**	112	**HW040+NMRV-P110**	IHW040+NMRV-P110
7684	6.1	186.32	1.25	**2320**	112	**HW040+NMRV-P110**	IHW040+NMRV-P110
11144	5.2	220.00	1.45	**2320**	112	**HW040+NMRV-P110**	IHW040+NMRV-P110
8701	4.5	252.00	1.08	**2320**	112	**HW040+NMRV-P110**	IHW040+NMRV-P110
10356	4.1	275.00	1.13	**2320**	112	**HW040+NMRV-P110**	IHW040+NMRV-P110
10199	3.7	304.55	1.01	**2320**	112	**HW040+NMRV-P110**	IHW040+NMRV-P110
9094	3.5	330.00	0.88	**2320**	112	**HW040+NMRV-P110**	IHW040+NMRV-P110
8388	3	383.33	0.67	**2320**	112	**HW040+NMRV-P110**	IHW040+NMRV-P110
7610	2.6	440.00	0.61	**2320**	112	**HW040+NMRV-P110**	IHW040+NMRV-P110
9379	2.5	460.00	0.67	**2320**	112	**HW040+NMRV-P110**	IHW040+NMRV-P110
8116	2.2	525.00	0.51	**2320**	112	**HW040+NMRV-P110**	IHW040+NMRV-P110
7885	1.9	613.33	0.46	**2320**	112	**HW040+NMRV-P110**	IHW040+NMRV-P110
7971	1.6	700.00	0.41	**2320**	112	**HW040+NMRV-P110**	IHW040+NMRV-P110
6608	1.5	766.67	0.34	**2320**	112	**HW040+NMRV-P110**	IHW040+NMRV-P110
6660	1.3	875.00	0.30	**2320**	112	**HW040+NMRV-P110**	IHW040+NMRV-P110

Helical Worm Gear Reducer Ratings - Input Speed 1750 rpm

Maximum Torque lbs*in	Output Speed RPM	Ratio i	Maximum Power HP	OHL		Gear Reducer	
				Output Shaft lbs	Input Shaft lbs	Motorized Input	Shaft Input
475	79	22.08	0.74	417	-	HA31+NMRV040	-
522	74	23.75	0.74	364	-	HA31+NMRV040	-
534	69	25.50	0.71	364	-	HA31+NMRV040	-
499	59	29.44	0.60	459	-	HA31+NMRV040	-
565	56	31.50	0.61	494	-	HA31+NMRV040	-
558	49	35.63	0.55	417	-	HA31+NMRV040	-
580	43	40.91	0.50	417	-	HA31+NMRV040	-
517	40	44.17	0.44	525	-	HA31+NMRV040	-
569	37	47.50	0.43	459	-	HA31+NMRV040	-
586	32	54.55	0.39	459	-	HA31+NMRV040	-
486	30	58.89	0.32	578	-	HA31+NMRV040	-
601	28	63.00	0.35	622	-	HA31+NMRV040	-
583	25	71.25	0.31	525	-	HA31+NMRV040	-
621	22	78.75	0.29	622	-	HA31+NMRV040	-
530	20	88.33	0.27	661	-	HA31+NMRV040	-
612	19	94.50	0.25	713	-	HA31+NMRV040	-
542	17	102.00	0.21	578	-	HA31+NMRV040	-
547	16	109.09	0.20	578	-	HA31+NMRV040	-
630	15	118.13	0.21	713	-	HA31+NMRV040	-
498	14	127.50	0.17	622	-	HA31+NMRV040	-
591	12	142.50	0.19	661	-	HA31+NMRV040	-
523	11	154.67	0.17	728	-	HA31+NMRV040	-
607	11	163.64	0.17	661	-	HA31+NMRV040	-
621	9.3	189.00	0.16	785	-	HA31+NMRV040	-
546	8.6	204.00	0.14	728	-	HA31+NMRV040	-
820	79	22.08	1.26	572	-	HA31+NMRV050	-
603	74	23.75	0.86	500	-	HA31+NMRV050	-
628	69	25.50	0.84	500	-	HA31+NMRV050	-
956	59	29.44	1.12	629	-	HA31+NMRV050	-
623	56	31.50	0.68	678	-	HA31+NMRV050	-
883	49	35.63	0.86	572	-	HA31+NMRV050	-
918	43	40.91	0.78	572	-	HA31+NMRV050	-
956	40	44.17	0.80	721	-	HA31+NMRV050	-
1093	37	47.50	0.82	629	-	HA31+NMRV050	-
1127	32	54.55	0.74	629	-	HA31+NMRV050	-
850	30	58.89	0.55	793	-	HA31+NMRV050	-
1157	28	63.00	0.66	854	-	HA31+NMRV050	-
1086	25	71.25	0.58	721	-	HA31+NMRV050	-
1128	22	78.75	0.52	854	-	HA31+NMRV050	-
960	20	88.33	0.47	908	-	HA31+NMRV050	-
1144	19	94.50	0.47	978	-	HA31+NMRV050	-
978	17	102.00	0.38	793	-	HA31+NMRV050	-
991	16	109.09	0.37	793	-	HA31+NMRV050	-
1180	15	118.13	0.39	978	-	HA31+NMRV050	-
898	14	127.50	0.30	854	-	HA31+NMRV050	-
1124	12	142.50	0.36	908	-	HA31+NMRV050	-
956	11	154.67	0.30	999	-	HA31+NMRV050	-
1169	11	163.64	0.33	908	-	HA31+NMRV050	-
1210	9.3	189.00	0.30	1088	-	HA31+NMRV050	-
1017	8.6	204.00	0.25	999	-	HA31+NMRV050	-
1262	7.4	236.25	0.25	1088	-	HA31+NMRV050	-
1054	6.9	252.00	0.22	1088	-	HA31+NMRV050	-
977	6.4	272.73	0.20	1076	-	HA31+NMRV050	-
840	6.1	285.00	0.17	1088	-	HA31+NMRV050	-
1007	5.6	315.00	0.18	1088	-	HA31+NMRV050	-

Maximum Torque lbs*in	Output Speed RPM	Ratio i	Maximum Power HP	OHL		Gear Reducer	
				Output Shaft lbs	Input Shaft lbs	Motorized Input	Shaft Input
1538	79	22.08	2.29	**748**	-	**HW030+NMRV-P063**	-
1682	60	29.00	1.94	**748**	-	**HW030+NMRV-P063**	-
1692	45	38.67	1.54	**823**	-	**HW030+NMRV-P063**	-
1672	40	44.17	1.37	**942**	-	**HW030+NMRV-P063**	-
1813	37	47.50	1.35	**823**	-	**HW030+NMRV-P063**	-
1829	30	58.00	1.17	**942**	-	**HW030+NMRV-P063**	-
1960	25	71.25	1.03	**942**	-	**HW030+NMRV-P063**	-
1816	23	77.33	0.91	**1037**	-	**HW030+NMRV-P063**	-
2053	21	81.82	0.95	**942**	-	**HW030+NMRV-P063**	-
1778	20	88.33	0.85	**1187**	-	**HW030+NMRV-P063**	-
1997	18	95.00	0.83	**1037**	-	**HW030+NMRV-P063**	-
2099	16	109.09	0.76	**1037**	-	**HW030+NMRV-P063**	-
2320	15	118.13	0.76	**1278**	-	**HW030+NMRV-P063**	-
1913	13	136.36	0.58	**1117**	-	**HW030+NMRV-P063**	-
2085	12	142.50	0.66	**1187**	-	**HW030+NMRV-P063**	-
2308	11	157.50	0.60	**1407**	-	**HW030+NMRV-P063**	-
2184	11	163.64	0.61	**1187**	-	**HW030+NMRV-P063**	-
1490	9.9	176.67	0.43	**1410**	-	**HW030+NMRV-P063**	-
2098	8.9	196.88	0.45	**1410**	-	**HW030+NMRV-P063**	-
2115	8	218.18	0.48	**1306**	-	**HW030+NMRV-P063**	-
2468	7.4	236.25	0.49	**1410**	-	**HW030+NMRV-P063**	-
1959	6.4	272.73	0.38	**1407**	-	**HW030+NMRV-P063**	-
2299	5.6	315.00	0.37	**1410**	-	**HW030+NMRV-P063**	-
2089	4.4	393.75	0.29	**1410**	-	**HW030+NMRV-P063**	-
2392	4	433.33	0.29	**1410**	-	**HW030+NMRV-P063**	-
1896	3.7	472.50	0.24	**1410**	-	**HW030+NMRV-P063**	-
2167	3.2	541.67	0.22	**1410**	-	**HW030+NMRV-P063**	-
1958	2.7	650.00	0.18	**1410**	-	**HW030+NMRV-P063**	-
1145	2.2	787.50	0.11	**1410**	-	**HW030+NMRV-P063**	-
1458	2	866.67	0.12	**1410**	-	**HW030+NMRV-P063**	-
1145	1.6	1083.33	0.08	**1410**	-	**HW030+NMRV-P063**	-
2133	79	22.08	3.18	**882**	-	**HW030+NMRV-P075**	-
2377	60	29.00	2.74	**882**	-	**HW030+NMRV-P075**	-
2469	45	38.67	2.24	**971**	-	**HW030+NMRV-P075**	-
2658	40	44.17	2.17	**1112**	-	**HW030+NMRV-P075**	-
2646	37	47.50	1.98	**971**	-	**HW030+NMRV-P075**	-
2909	30	58.00	1.85	**1112**	-	**HW030+NMRV-P075**	-
3117	25	71.25	1.64	**1112**	-	**HW030+NMRV-P075**	-
3057	23	77.33	1.52	**1224**	-	**HW030+NMRV-P075**	-
3264	21	81.82	1.51	**1112**	-	**HW030+NMRV-P075**	-
2873	20	88.33	1.38	**1401**	-	**HW030+NMRV-P075**	-
3366	18	95.00	1.39	**1224**	-	**HW030+NMRV-P075**	-
3525	16	109.09	1.28	**1224**	-	**HW030+NMRV-P075**	-
3144	15	116.00	1.19	**1401**	-	**HW030+NMRV-P075**	-
3183	13	136.36	0.97	**1318**	-	**HW030+NMRV-P075**	-
3369	12	142.50	1.06	**1401**	-	**HW030+NMRV-P075**	-
3081	11	154.67	0.93	**1542**	-	**HW030+NMRV-P075**	-
3528	11	163.64	0.98	**1401**	-	**HW030+NMRV-P075**	-
2492	9.9	176.67	0.72	**1659**	-	**HW030+NMRV-P075**	-
3508	8.9	196.88	0.76	**1659**	-	**HW030+NMRV-P075**	-
3457	8	218.18	0.78	**1542**	-	**HW030+NMRV-P075**	-
3987	7.4	236.25	0.79	**1659**	-	**HW030+NMRV-P075**	-
3190	6.4	272.73	0.62	**1659**	-	**HW030+NMRV-P075**	-
3798	5.6	315.00	0.61	**1659**	-	**HW030+NMRV-P075**	-
3416	4.4	393.75	0.47	**1659**	-	**HW030+NMRV-P075**	-
3239	3.7	472.50	0.41	**1659**	-	**HW030+NMRV-P075**	-
3062	3.2	541.67	0.32	**1659**	-	**HW030+NMRV-P075**	-
3352	2.7	650.00	0.31	**1659**	-	**HW030+NMRV-P075**	-

Maximum Torque lbs*in	Output Speed RPM	Ratio i	Maximum Power HP	OHL		Gear Reducer	
				Output Shaft lbs	Input Shaft lbs	Motorized Input	Shaft Input
1973	2.2	787.50	0.19	**1659**	-	**HW030+NMRV-P075**	-
2527	2	866.67	0.20	**1659**	-	**HW030+NMRV-P075**	-
2010	1.6	1083.33	0.15	**1659**	-	**HW030+NMRV-P075**	-
3672	75	23.29	5.22	**976**	67	**HW040+NMRV-P090**	IHW040+NMRV-P090
4074	56	31.05	4.39	**1075**	90	**HW040+NMRV-P090**	IHW040+NMRV-P090
4373	42	42.00	3.54	**1075**	90	**HW040+NMRV-P090**	IHW040+NMRV-P090
4584	38	46.58	3.40	**1230**	90	**HW040+NMRV-P090**	IHW040+NMRV-P090
5069	28	63.00	2.85	**1230**	90	**HW040+NMRV-P090**	IHW040+NMRV-P090
3927	23	77.63	1.88	**1458**	90	**HW040+NMRV-P090**	IHW040+NMRV-P090
4862	21	84.00	2.13	**1354**	90	**HW040+NMRV-P090**	IHW040+NMRV-P090
4924	19	93.16	2.07	**1550**	90	**HW040+NMRV-P090**	IHW040+NMRV-P090
5319	16	110.00	1.81	**1354**	90	**HW040+NMRV-P090**	IHW040+NMRV-P090
5445	14	126.00	1.75	**1550**	90	**HW040+NMRV-P090**	IHW040+NMRV-P090
5235	13	137.50	1.48	**1458**	90	**HW040+NMRV-P090**	IHW040+NMRV-P090
4139	11	155.26	1.17	**1838**	90	**HW040+NMRV-P090**	IHW040+NMRV-P090
5957	11	165.00	1.50	**1550**	90	**HW040+NMRV-P090**	IHW040+NMRV-P090
3700	9.4	186.32	0.93	**1839**	90	**HW040+NMRV-P090**	IHW040+NMRV-P090
5432	8	220.00	1.10	**1706**	90	**HW040+NMRV-P090**	IHW040+NMRV-P090
4149	6.9	252.00	0.81	**1839**	90	**HW040+NMRV-P090**	IHW040+NMRV-P090
5075	6.4	275.00	0.87	**1838**	90	**HW040+NMRV-P090**	IHW040+NMRV-P090
5192	5.7	304.55	0.82	**1839**	90	**HW040+NMRV-P090**	IHW040+NMRV-P090
4450	5.3	330.00	0.68	**1839**	90	**HW040+NMRV-P090**	IHW040+NMRV-P090
5417	4.6	383.33	0.69	**1839**	90	**HW040+NMRV-P090**	IHW040+NMRV-P090
5525	4	437.50	0.62	**1839**	90	**HW040+NMRV-P090**	IHW040+NMRV-P090
4725	3.8	460.00	0.54	**1839**	90	**HW040+NMRV-P090**	IHW040+NMRV-P090
4811	3.3	525.00	0.49	**1839**	90	**HW040+NMRV-P090**	IHW040+NMRV-P090
3771	2.9	613.33	0.36	**1839**	90	**HW040+NMRV-P090**	IHW040+NMRV-P090
3828	2.5	700.00	0.32	**1839**	90	**HW040+NMRV-P090**	IHW040+NMRV-P090
3110	2.3	766.67	0.26	**1839**	90	**HW040+NMRV-P090**	IHW040+NMRV-P090
3130	2	875.00	0.23	**1839**	90	**HW040+NMRV-P090**	IHW040+NMRV-P090
3723	75	23.29	5.22	**1234**	67	**HW040+NMRV-P110**	IHW040+NMRV-P110
4851	56	31.05	5.22	**1358**	67	**HW040+NMRV-P110**	IHW040+NMRV-P110
4373	42	42.00	3.54	**1358**	112	**HW040+NMRV-P110**	IHW040+NMRV-P110
7124	38	46.58	5.22	**1554**	67	**HW040+NMRV-P110**	IHW040+NMRV-P110
6932	28	62.11	3.90	**1711**	112	**HW040+NMRV-P110**	IHW040+NMRV-P110
7335	23	77.63	3.39	**1843**	112	**HW040+NMRV-P110**	IHW040+NMRV-P110
8301	21	84.00	3.54	**1711**	112	**HW040+NMRV-P110**	IHW040+NMRV-P110
8117	19	93.16	3.36	**1958**	112	**HW040+NMRV-P110**	IHW040+NMRV-P110
8976	17	105.00	3.14	**1843**	112	**HW040+NMRV-P110**	IHW040+NMRV-P110
9812	14	126.00	3.12	**1958**	112	**HW040+NMRV-P110**	IHW040+NMRV-P110
8302	13	137.50	2.26	**1843**	112	**HW040+NMRV-P110**	IHW040+NMRV-P110
7326	11	155.26	1.98	**2320**	112	**HW040+NMRV-P110**	IHW040+NMRV-P110
8990	10	168.00	2.21	**2155**	112	**HW040+NMRV-P110**	IHW040+NMRV-P110
6543	9.4	186.32	1.54	**2320**	112	**HW040+NMRV-P110**	IHW040+NMRV-P110
9867	8	220.00	1.91	**2155**	112	**HW040+NMRV-P110**	IHW040+NMRV-P110
7396	6.9	252.00	1.35	**2320**	112	**HW040+NMRV-P110**	IHW040+NMRV-P110
9111	6.4	275.00	1.48	**2320**	112	**HW040+NMRV-P110**	IHW040+NMRV-P110
9335	5.7	304.55	1.38	**2320**	112	**HW040+NMRV-P110**	IHW040+NMRV-P110
7968	5.3	330.00	1.14	**2320**	112	**HW040+NMRV-P110**	IHW040+NMRV-P110
8294	4.6	383.33	0.99	**2320**	112	**HW040+NMRV-P110**	IHW040+NMRV-P110
6637	4	440.00	0.79	**2320**	112	**HW040+NMRV-P110**	IHW040+NMRV-P110
8491	3.8	460.00	0.90	**2320**	112	**HW040+NMRV-P110**	IHW040+NMRV-P110
8008	3.3	525.00	0.75	**2320**	112	**HW040+NMRV-P110**	IHW040+NMRV-P110
7022	2.9	613.33	0.61	**2320**	112	**HW040+NMRV-P110**	IHW040+NMRV-P110
7143	2.5	700.00	0.55	**2320**	112	**HW040+NMRV-P110**	IHW040+NMRV-P110
5645	2.3	766.67	0.43	**2320**	112	**HW040+NMRV-P110**	IHW040+NMRV-P110
5681	2	875.00	0.39	**2320**	112	**HW040+NMRV-P110**	IHW040+NMRV-P110

Double Worm Gearmotor Ratings - Motor Speed 1750 rpm

0.08 HP

Output Speed RPM	Service Factor sf	Output Torque in-lbs	Ratio Stage 1	Ratio Stage 2	Exact Ratio i	Maximum Torque in-lbs	OHL Output Shaft lbs	Gearmotor		Gear Reducer	
								Reducer	Motor	Reducer	NEMA C-face
18	1.6	180	10	10	100	283	323	**NMRV025/030**	56A4	-	-
18	3.4	185	10	10	100	628	622	**NMRV025/040**	56A4	-	-
12	1.1	233	7.5	20	150	248	407	**NMRV025/030**	56A4	-	-
12	2.3	255	7.5	20	150	575	784	**NMRV025/040**	56A4	-	-
8.8	1.7	332	10	20	200	575	784	**NMRV025/040**	56A4	-	-
7.0	1.4	391	10	25	250	540	785	**NMRV025/040**	56A4	-	-
5.8	1.5	426	10	30	300	646	785	**NMRV025/040**	56A4	-	-

0.12 HP

Output Speed RPM	Service Factor sf	Output Torque in-lbs	Ratio Stage 1	Ratio Stage 2	Exact Ratio i	Maximum Torque in-lbs	OHL Output Shaft lbs	Gearmotor		Gear Reducer	
								Reducer	Motor	Reducer	NEMA C-face
18	1.0	271	10	10	100	283	323	**NMRV025/030**	56B4	-	-
18	2.3	278	10	10	100	628	622	**NMRV025/040**	56B4	-	-
18	2.3	278	10	10	100	628	622	**NMRV030/040**	56B4	-	-
12	1.5	382	7.5	20	150	575	784	**NMRV025/040**	56B4	-	-
12	1.6	395	10	15	150	637	713	**NMRV030/040**	56B4	-	-
12	3.0	395	10	15	150	1195	978	**NMRV030/050**	56B4	-	-
8.8	1.2	498	10	20	200	575	784	**NMRV025/040**	56B4	-	-
8.8	1.2	498	10	20	200	575	784	**NMRV030/040**	56B4	-	-
8.8	2.1	498	10	20	200	1062	1076	**NMRV030/050**	56B4	-	-
7.0	1.7	586	10	25	250	974	1088	**NMRV030/050**	56B4	-	-
7.0	3.4	604	10	25	250	2045	1410	**NMRV-P030/063**	56B4	-	-
5.8	1.0	639	10	30	300	646	785	**NMRV025/040**	56B4	-	-
5.8	1.0	639	10	30	300	646	785	**NMRV030/040**	56B4	-	-
5.8	2.0	649	10	30	300	1283	1088	**NMRV030/050**	56B4	-	-
5.8	3.6	621	7.5	40	300	2259	1410	**NMRV-P030/063**	56B4	-	-
4.4	1.4	779	10	40	400	1097	1088	**NMRV030/050**	56B4	-	-
4.4	2.8	808	10	40	400	2259	1410	**NMRV-P030/063**	56B4	-	-
3.5	1.1	1082	50	10	500	1213	854	**NMRV040/050**	56B4	-	-
3.5	1.2	902	10	50	500	1062	1088	**NMRV030/050**	56B4	-	-
3.5	2.2	938	10	50	500	2089	1410	**NMRV-P030/063**	56B4	-	-
2.9	1.1	1158	20	30	600	1283	1088	**NMRV030/050**	56B4	-	-
2.9	2.0	1177	20	30	600	2398	1410	**NMRV-P030/063**	56B4	-	-
2.3	1.7	1372	25	30	750	2398	1410	**NMRV-P030/063**	56B4	-	-
1.9	1.5	1575	30	30	900	2398	1410	**NMRV-P030/063**	56B4	-	-
1.5	1.3	1909	40	30	1200	2398	1410	**NMRV-P030/063**	56B4	-	-
1.2	1.1	2227	50	30	1500	2398	1410	**NMRV-P030/063**	56B4	-	-
1.2	1.5	2629	50	30	1500	3929	1659	**NMRV-P040/075**	56B4	-	-
1.2	2.3	2752	50	30	1500	6196	1839	**NMRV-P040/090**	56B4	-	-
1.0	1.3	2955	60	30	1800	3929	1659	**NMRV-P040/075**	56B4	-	-
1.0	2.0	3093	60	30	1800	6196	1839	**NMRV-P040/090**	56B4	-	-
0.7	1.0	3632	60	40	2400	3664	1659	**NMRV-P040/075**	56B4	-	-
0.7	1.4	3816	60	40	2400	5399	1839	**NMRV-P040/090**	56B4	-	-
0.6	1.1	4463	60	50	3000	4956	1839	**NMRV-P040/090**	56B4	-	-

0.16 HP

Output Speed RPM	Service Factor sf	Output Torque in-lbs	Ratio Stage 1	Ratio Stage 2	Exact Ratio i	Maximum Torque in-lbs	OHL Output Shaft lbs	Gearmotor		Gear Reducer	
								Reducer	Motor	Reducer	NEMA C-face
18	1.7	370	10	10	100	628	622	**NMRV030/040**	63A4	**NMRV030/040**	48C
18	3.1	389	10	10	100	1213	854	**NMRV040/050**	63A4	**NMRV040/050**	56C
18	3.2	380	10	10	100	1213	854	**NMRV030/050**	63A4	**NMRV030/050**	48C
18	3.3	380	10	10	100	1264	1117	**NMRV-P030/063**	63A4	**NMRV-P030/063**	48C
12	1.2	527	10	15	150	637	713	**NMRV030/040**	63A4	**NMRV030/040**	48C
12	2.2	539	10	15	150	1195	978	**NMRV040/050**	63A4	**NMRV040/050**	56C
12	2.3	527	10	15	150	1195	978	**NMRV030/050**	63A4	**NMRV030/050**	48C
12	3.3	534	10	15	150	1777	1278	**NMRV-P030/063**	63A4	**NMRV-P030/063**	48C
8.8	1.6	664	10	20	200	1062	1076	**NMRV030/050**	63A4	**NMRV030/050**	48C
8.8	1.6	680	10	20	200	1062	1076	**NMRV040/050**	63A4	**NMRV040/050**	56C
8.8	3.2	690	10	20	200	2239	1407	**NMRV-P040/063**	63A4	**NMRV-P040/063**	56C
8.8	3.3	673	10	20	200	2239	1407	**NMRV-P030/063**	63A4	**NMRV-P030/063**	48C
7.0	1.2	782	10	25	250	974	1088	**NMRV030/050**	63A4	**NMRV030/050**	48C
7.0	1.2	801	10	25	250	974	1088	**NMRV040/050**	63A4	**NMRV040/050**	56C
7.0	2.5	806	10	25	250	2045	1410	**NMRV-P030/063**	63A4	**NMRV-P030/063**	48C
7.0	2.5	825	10	25	250	2045	1410	**NMRV-P040/063**	63A4	**NMRV-P040/063**	56C
7.0	4.0	850	10	25	250	3359	1659	**NMRV-P040/075**	63A4	**NMRV-P040/075**	56C
5.8	1.4	887	10	30	300	1283	1088	**NMRV040/050**	63A4	**NMRV040/050**	56C
5.8	1.5	866	10	30	300	1283	1088	**NMRV030/050**	63A4	**NMRV030/050**	48C
5.8	2.7	828	7.5	40	300	2259	1410	**NMRV-P030/063**	63A4	**NMRV-P030/063**	48C
5.8	2.7	902	10	30	300	2398	1410	**NMRV-P040/063**	63A4	**NMRV-P040/063**	56C
4.4	1.0	1064	10	40	400	1097	1088	**NMRV040/050**	63A4	**NMRV040/050**	56C
4.4	1.1	1039	10	40	400	1097	1088	**NMRV030/050**	63A4	**NMRV030/050**	48C
4.4	2.0	1104	10	40	400	2259	1410	**NMRV-P040/063**	63A4	**NMRV-P040/063**	56C
4.4	2.1	1078	10	40	400	2259	1410	**NMRV-P030/063**	63A4	**NMRV-P030/063**	48C
4.4	3.2	1163	10	40	400	3664	1659	**NMRV-P040/075**	63A4	**NMRV-P040/075**	56C
3.5	1.3	1534	20	25	500	2045	1410	**NMRV-P040/063**	63A4	**NMRV-P040/063**	56C
3.5	1.7	1251	10	50	500	2089	1410	**NMRV-P030/063**	63A4	**NMRV-P030/063**	48C
3.5	2.4	1330	10	50	500	3257	1659	**NMRV-P040/075**	63A4	**NMRV-P040/075**	56C
3.5	3.0	1669	20	25	500	5045	1839	**-**	-	**NMRV-P050/090**	56C
3.5	3.5	1429	10	50	500	4956	1839	**NMRV-P040/090**	63A4	**NMRV-P040/090**	56C
2.9	1.4	1676	20	30	600	2398	1410	**NMRV-P040/063**	63A4	**NMRV-P040/063**	56C
2.9	1.5	1570	20	30	600	2398	1410	**NMRV-P030/063**	63A4	**NMRV-P030/063**	48C
2.9	2.2	1758	20	30	600	3929	1659	**NMRV-P040/075**	63A4	**NMRV-P040/075**	56C
2.9	3.3	1864	20	30	600	6196	1839	**-**	-	**NMRV-P050/090**	56C
2.9	3.4	1841	20	30	600	6196	1839	**NMRV-P040/090**	63A4	**NMRV-P040/090**	56C
2.3	1.2	2015	25	30	750	2398	1410	**NMRV-P040/063**	63A4	**NMRV-P040/063**	56C
2.3	1.3	1830	25	30	750	2398	1410	**NMRV-P030/063**	63A4	**NMRV-P030/063**	48C
2.3	1.9	2114	25	30	750	3929	1659	**NMRV-P040/075**	63A4	**NMRV-P040/075**	56C
2.3	2.8	2213	25	30	750	6196	1839	**NMRV-P040/090**	63A4	**NMRV-P040/090**	56C
2.3	2.8	2243	25	30	750	6196	1839	**-**	-	**NMRV-P050/090**	56C
1.9	1.1	2100	30	30	900	2398	1410	**NMRV-P030/063**	63A4	**NMRV-P030/063**	48C
1.9	1.1	2259	30	30	900	2398	1410	**NMRV-P040/063**	63A4	**NMRV-P040/063**	56C
1.9	1.7	2370	30	30	900	3929	1659	**NMRV-P040/075**	63A4	**NMRV-P040/075**	56C
1.9	2.4	2551	30	30	900	6196	1839	**-**	-	**NMRV-P050/090**	56C
1.9	2.5	2481	30	30	900	6196	1839	**NMRV-P040/090**	63A4	**NMRV-P040/090**	56C
1.5	1.3	2938	40	30	1200	3929	1659	**NMRV-P040/075**	63A4	**NMRV-P040/075**	56C
1.5	2.0	3076	40	30	1200	6196	1839	**NMRV-P040/090**	63A4	**NMRV-P040/090**	56C
1.5	2.0	3169	40	30	1200	6196	1839	**NMRV-P050/090**	63A4	**NMRV-P050/090**	56C
1.5	3.3	3359	40	30	1200	11196	2320	**-**	-	**NMRV-P063/110**	56C
1.5	3.5	3169	40	30	1200	11196	2320	**NMRV-P050/110**	63A4	**NMRV-P050/110**	56C
1.2	1.1	3505	50	30	1500	3929	1659	**NMRV-P040/075**	63A4	**NMRV-P040/075**	56C
1.2	1.7	3670	50	30	1500	6196	1839	**NMRV-P040/090**	63A4	**NMRV-P040/090**	56C
1.2	1.7	3728	50	30	1500	6196	1839	**NMRV-P050/090**	63A4	**NMRV-P050/090**	56C

0.16 HP

Output Speed RPM	Service Factor sf	Output Torque in-lbs	Ratio Stage 1	Ratio Stage 2	Exact Ratio i	Maximum Torque in-lbs	OHL Output Shaft lbs	Gearmotor		Gear Reducer	
								Reducer	Motor	Reducer	NEMA C-face
1.2	2.8	3965	50	30	1500	11196	2320	-	-	NMRV-P063/110	56C
1.2	3.0	3728	50	30	1500	11196	2320	NMRV-P050/110	63A4	NMRV-P050/110	56C
1.2	3.9	4024	50	30	1500	15577	3035	-	-	NMRV-P063/130	56C
1.0	1.5	4124	60	30	1800	6196	1839	NMRV-P040/090	63A4	NMRV-P040/090	56C
1.0	1.5	4194	60	30	1800	6196	1839	NMRV-P050/090	63A4	NMRV-P050/090	56C
1.0	2.5	4494	60	30	1800	11196	2320	-	-	NMRV-P063/110	56C
1.0	2.7	4194	60	30	1800	11196	2320	NMRV-P050/110	63A4	NMRV-P050/110	56C
1.0	3.4	4561	60	30	1800	15577	3035	-	-	NMRV-P063/130	56C
1.0	3.8	4896	60	30	1800	18587	4047	-	-	NMRV-P063/150	56C
0.7	1.0	5175	60	40	2400	5399	1839	NMRV-P050/090	63A4	NMRV-P050/090	56C
0.7	1.1	5088	60	40	2400	5399	1839	NMRV-P040/090	63A4	NMRV-P040/090	56C
0.7	1.8	5813	60	40	2400	10488	2320	-	-	NMRV-P063/110	56C
0.7	1.9	5425	60	40	2400	10488	2320	NMRV-P050/110	63A4	NMRV-P050/110	56C
0.7	2.5	5813	60	40	2400	14604	3035	-	-	NMRV-P063/130	56C
0.6	1.4	6930	60	50	3000	9736	2320	-	-	NMRV-P063/110	56C
0.6	1.5	6468	60	50	3000	9736	2320	NMRV-P050/110	63A4	NMRV-P050/110	56C
0.6	2.0	6930	60	50	3000	13719	3035	-	-	NMRV-P063/130	56C
0.6	3.0	6930	60	50	3000	20622	4047	-	-	NMRV-P063/150	56C
0.4	1.0	9613	100	50	5000	9736	2320	-	-	NMRV-P063/110	56C
0.4	1.1	8984	100	50	5000	9736	2320	NMRV-P050/110	63A4	NMRV-P050/110	56C
0.4	1.1	8531	80	50	4000	9736	2320	-	-	NMRV-P063/110	56C
0.4	1.3	7762	80	50	4000	9736	2320	NMRV-P050/110	63A4	NMRV-P050/110	56C
0.4	1.4	9613	100	50	5000	13719	3035	-	-	NMRV-P063/130	56C
0.4	1.6	8531	80	50	4000	13719	3035	-	-	NMRV-P063/130	56C
0.4	2.1	9613	100	50	5000	20622	4047	-	-	NMRV-P063/150	56C
0.4	2.4	8531	80	50	4000	20622	4047	-	-	NMRV-P063/150	56C

0.25 HP

Output Speed RPM	Service Factor sf	Output Torque in-lbs	Ratio Stage 1	Ratio Stage 2	Exact Ratio i	Maximum Torque in-lbs	OHL Output Shaft lbs	Gearmotor		Gear Reducer	
								Reducer	Motor	Reducer	NEMA C-face
18	1.1	556	10	10	100	628	622	NMRV030/040	63B4	NMRV030/040	48C
18	2.1	570	10	10	100	1213	854	NMRV030/050	63B4	NMRV030/050	48C
18	2.1	584	10	10	100	1213	854	NMRV040/050	63B4	NMRV040/050	56C
18	2.2	570	10	10	100	1264	1117	NMRV-P030/063	63B4	NMRV-P030/063	48C
18	3.9	584	10	10	100	2277	1117	NMRV-P040/063	63B4	NMRV-P040/063	56C
12	1.5	790	10	15	150	1195	978	NMRV030/050	63B4	NMRV030/050	48C
12	1.5	809	10	15	150	1195	978	NMRV040/050	63B4	NMRV040/050	56C
12	2.2	801	10	15	150	1777	1278	NMRV-P030/063	63B4	NMRV-P030/063	48C
12	2.8	820	10	15	150	2300	1278	NMRV-P040/063	63B4	NMRV-P040/063	56C
8.8	1.0	1020	10	20	200	1062	1076	NMRV040/050	63B4	NMRV040/050	56C
8.8	1.1	996	10	20	200	1062	1076	NMRV030/050	63B4	NMRV030/050	48C
8.8	2.2	1010	10	20	200	2239	1407	NMRV-P030/063	63B4	NMRV-P030/063	48C
8.8	2.2	1035	10	20	200	2239	1407	NMRV-P040/063	63B4	NMRV-P040/063	56C
8.8	3.5	1064	10	20	200	3715	1659	NMRV-P040/075	63B4	NMRV-P040/075	56C
7.0	1.7	1209	10	25	250	2045	1410	NMRV-P030/063	63B4	NMRV-P030/063	48C
7.0	1.7	1238	10	25	250	2045	1410	NMRV-P040/063	63B4	NMRV-P040/063	56C
7.0	2.6	1275	10	25	250	3359	1659	NMRV-P040/075	63B4	NMRV-P040/075	56C
7.0	3.7	1361	10	25	250	5045	1839	-	-	NMRV-P050/090	56C
7.0	3.8	1330	10	25	250	5045	1839	NMRV-P040/090	63B4	NMRV-P040/090	56C
5.8	1.8	1241	7.5	40	300	2259	1410	NMRV-P030/063	63B4	NMRV-P030/063	48C

0.25 HP

Output Speed RPM	Service Factor sf	Output Torque in-lbs	Ratio Stage 1	Ratio Stage 2	Exact Ratio i	Maximum Torque in-lbs	OHL Output Shaft lbs	Gearmotor		Gear Reducer	
								Reducer	Motor	Reducer	NEMA C-face
5.8	1.8	1352	10	30	300	2398	1410	**NMRV-P040/063**	63B4	**NMRV-P040/063**	56C
5.8	2.8	1419	10	30	300	3929	1659	**NMRV-P040/075**	63B4	**NMRV-P040/075**	56C
4.4	1.4	1616	10	40	400	2259	1410	**NMRV-P030/063**	63B4	**NMRV-P030/063**	48C
4.4	1.4	1655	10	40	400	2259	1410	**NMRV-P040/063**	63B4	**NMRV-P040/063**	56C
4.4	2.1	1744	10	40	400	3664	1659	**NMRV-P040/075**	63B4	**NMRV-P040/075**	56C
4.4	2.9	1833	10	40	400	5399	1839	**NMRV-P040/090**	63B4	**NMRV-P040/090**	56C
4.4	2.9	1876	10	40	400	5399	1839	**-**	-	**NMRV-P050/090**	56C
3.5	1.1	1876	10	50	500	2089	1410	**NMRV-P030/063**	63B4	**NMRV-P030/063**	48C
3.5	1.6	1995	10	50	500	3257	1659	**NMRV-P040/075**	63B4	**NMRV-P040/075**	56C
3.5	2.0	2504	20	25	500	5045	1839	**-**	-	**NMRV-P050/090**	56C
3.5	2.3	2143	10	50	500	4956	1839	**NMRV-P040/090**	63B4	**NMRV-P040/090**	56C
3.5	3.9	2694	20	25	500	10382	2320	**-**	-	**NMRV-P063/110**	56C
3.5	4.0	2608	20	25	500	10382	2320	**-**	-	**NMRV-P050/110**	56C
2.9	1.0	2355	20	30	600	2398	1410	**NMRV-P030/063**	63B4	**NMRV-P030/063**	48C
2.9	1.5	2637	20	30	600	3929	1659	**NMRV-P040/075**	63B4	**NMRV-P040/075**	56C
2.9	2.2	2761	20	30	600	6196	1839	**NMRV-P040/090**	63B4	**NMRV-P040/090**	56C
2.9	2.2	2796	20	30	600	6196	1839	**-**	-	**NMRV-P050/090**	56C
2.9	3.9	2888	20	30	600	11196	2320	**-**	-	**NMRV-P063/110**	56C
2.3	1.2	3172	25	30	750	3929	1659	**NMRV-P040/075**	63B4	**NMRV-P040/075**	56C
2.3	1.8	3364	25	30	750	6196	1839	**-**	-	**NMRV-P050/090**	56C
2.3	1.9	3320	25	30	750	6196	1839	**NMRV-P040/090**	63B4	**NMRV-P040/090**	56C
2.3	3.2	3489	25	30	750	11196	2320	**-**	-	**NMRV-P063/110**	56C
2.3	3.3	3364	25	30	750	11196	2320	**-**	-	**NMRV-P050/110**	56C
1.9	1.1	3555	30	30	900	3929	1659	**NMRV-P040/075**	63B4	**NMRV-P040/075**	56C
1.9	1.6	3827	30	30	900	6196	1839	**-**	-	**NMRV-P050/090**	56C
1.9	1.7	3722	30	30	900	6196	1839	**NMRV-P040/090**	63B4	**NMRV-P040/090**	56C
1.9	2.8	3977	30	30	900	11196	2320	**-**	-	**NMRV-P063/110**	56C
1.9	2.9	3827	30	30	900	11196	2320	**-**	-	**NMRV-P050/110**	56C
1.9	3.9	4036	30	30	900	15577	3035	**-**	-	**NMRV-P063/130**	56C
1.5	1.3	4613	40	30	1200	6196	1839	**NMRV-P040/090**	63B4	**NMRV-P040/090**	56C
1.5	1.3	4753	40	30	1200	6196	1839	**NMRV-P050/090**	63B4	**NMRV-P050/090**	56C
1.5	2.2	5038	40	30	1200	11196	2320	**-**	-	**NMRV-P063/110**	56C
1.5	2.4	4753	40	30	1200	11196	2320	**NMRV-P050/110**	63B4	**NMRV-P050/110**	56C
1.5	3.0	5113	40	30	1200	15577	3035	**-**	-	**NMRV-P063/130**	56C
1.2	1.1	5505	50	30	1500	6196	1839	**NMRV-P040/090**	63B4	**NMRV-P040/090**	56C
1.2	1.1	5592	50	30	1500	6196	1839	**NMRV-P050/090**	63B4	**NMRV-P050/090**	56C
1.2	1.9	5948	50	30	1500	11196	2320	**-**	-	**NMRV-P063/110**	56C
1.2	2.0	5592	50	30	1500	11196	2320	**NMRV-P050/110**	63B4	**NMRV-P050/110**	56C
1.2	2.6	6036	50	30	1500	15577	3035	**-**	-	**NMRV-P063/130**	56C
1.2	3.4	6133	30	50	1500	20622	4047	**-**	-	**NMRV-P063/150**	56C
1.0	1.0	6186	60	30	1800	6196	1839	**NMRV-P040/090**	63B4	**NMRV-P040/090**	56C
1.0	1.7	6740	60	30	1800	11196	2320	**-**	-	**NMRV-P063/110**	56C
1.0	1.8	6291	60	30	1800	11196	2320	**NMRV-P050/110**	63B4	**NMRV-P050/110**	56C
1.0	2.3	6841	60	30	1800	15577	3035	**-**	-	**NMRV-P063/130**	56C
1.0	2.5	7344	60	30	1800	18587	4047	**-**	-	**NMRV-P063/150**	56C
0.7	1.2	8719	60	40	2400	10488	2320	**-**	-	**NMRV-P063/110**	56C
0.7	1.3	8138	60	40	2400	10488	2320	**NMRV-P050/110**	63B4	**NMRV-P050/110**	56C
0.7	1.7	8719	60	40	2400	14604	3035	**-**	-	**NMRV-P063/130**	56C
0.7	2.7	8853	60	40	2400	23631	4047	**-**	-	**NMRV-P063/150**	56C
0.6	1.0	9702	60	50	3000	9736	2320	**NMRV-P050/110**	63B4	**NMRV-P050/110**	56C
0.6	1.3	10395	60	50	3000	13719	3035	**-**	-	**NMRV-P063/130**	56C
0.6	2.0	10395	60	50	3000	20622	4047	**-**	-	**NMRV-P063/150**	56C
0.4	1.1	12796	80	50	4000	13719	3035	**-**	-	**NMRV-P063/130**	56C
0.4	1.4	14419	100	50	5000	20622	4047	**-**	-	**NMRV-P063/150**	56C
0.4	1.6	12796	80	50	4000	20622	4047	**-**	-	**NMRV-P063/150**	56C

0.33 HP

Output Speed RPM	Service Factor sf	Output Torque in-lbs	Ratio Stage 1	Ratio Stage 2	Exact Ratio i	Maximum Torque in-lbs	OHL Output Shaft lbs	Gearmotor		Gear Reducer	
								Reducer	Motor	Reducer	NEMA C-face
18	1.5	792	10	10	100	1213	854	**NMRV030/050**	63D4	**NMRV030/050**	48C
18	1.5	811	10	10	100	1213	854	**NMRV040/050**	63D4/71A4	**NMRV040/050**	56C
18	1.6	792	10	10	100	1264	1117	**NMRV-P030/063**	63D4	**NMRV-P030/063**	48C
18	2.8	811	10	10	100	2277	1117	**NMRV-P040/063**	63D4/71A4	**NMRV-P040/063**	56C
18	3.6	821	10	10	100	2961	1318	**NMRV-P040/075**	63D4/71A4	**NMRV-P040/075**	56C
18	3.6	842	10	10	100	3035	1458	**NMRV-P040/090**	63D4/71A4	**NMRV-P040/090**	56C
12	1.1	1097	10	15	150	1195	978	**NMRV030/050**	63D4	**NMRV030/050**	48C
12	1.1	1124	10	15	150	1195	978	**NMRV040/050**	63D4/71A4	**NMRV040/050**	56C
12	1.6	1112	10	15	150	1777	1278	**NMRV-P030/063**	63D4	**NMRV-P030/063**	48C
12	2.0	1139	10	15	150	2300	1278	**NMRV-P040/063**	63D4/71A4	**NMRV-P040/063**	56C
12	3.2	1170	10	15	150	3761	1509	**NMRV-P040/075**	63D4/71A4	**NMRV-P040/075**	56C
12	3.6	1201	10	15	150	4330	1669	**NMRV-P040/090**	63D4/71A4	**NMRV-P040/090**	56C
8.8	1.6	1403	10	20	200	2239	1407	**NMRV-P030/063**	63D4	**NMRV-P030/063**	48C
8.8	1.6	1437	10	20	200	2239	1407	**NMRV-P040/063**	63D4/71A4	**NMRV-P040/063**	56C
8.8	2.5	1478	10	20	200	3715	1659	**NMRV-P040/075**	63D4/71A4	**NMRV-P040/075**	56C
8.8	3.4	1576	10	20	200	5399	1838	**NMRV-P050/090**	71A4	**NMRV-P050/090**	56C
8.8	3.5	1540	10	20	200	5399	1838	**NMRV-P040/090**	63D4/71A4	**NMRV-P040/090**	56C
7.0	1.2	1679	10	25	250	2045	1410	**NMRV-P030/063**	63D4	**NMRV-P030/063**	48C
7.0	1.2	1719	10	25	250	2045	1410	**NMRV-P040/063**	63D4/71A4	**NMRV-P040/063**	56C
7.0	1.9	1770	10	25	250	3359	1659	**NMRV-P040/075**	63D4/71A4	**NMRV-P040/075**	56C
7.0	2.7	1847	10	25	250	5045	1839	**NMRV-P040/090**	63D4/71A4	**NMRV-P040/090**	56C
7.0	2.7	1891	10	25	250	5045	1839	**NMRV-P050/090**	71A4	**NMRV-P050/090**	56C
5.8	1.3	1724	7.5	40	300	2259	1410	**NMRV-P030/063**	63D4	**NMRV-P030/063**	48C
5.8	1.3	1878	10	30	300	2398	1410	**NMRV-P040/063**	63D4/71A4	**NMRV-P040/063**	56C
5.8	2.0	1971	10	30	300	3929	1659	**NMRV-P040/075**	63D4/71A4	**NMRV-P040/075**	56C
5.8	2.9	2112	10	30	300	6196	1839	**NMRV-P050/090**	71A4	**NMRV-P050/090**	56C
5.8	3.0	2063	10	30	300	6196	1839	**NMRV-P040/090**	63D4/71A4	**NMRV-P040/090**	56C
4.4	1.0	2245	10	40	400	2259	1410	**NMRV-P030/063**	63D4	**NMRV-P030/063**	48C
4.4	1.5	2422	10	40	400	3664	1659	**NMRV-P040/075**	63D4/71A4	**NMRV-P040/075**	56C
4.4	2.1	2545	10	40	400	5399	1839	**NMRV-P040/090**	63D4/71A4	**NMRV-P040/090**	56C
4.4	2.1	2605	10	40	400	5399	1839	**NMRV-P050/090**	71A4	**NMRV-P050/090**	56C
4.4	3.8	2731	10	40	400	10488	2320	**NMRV-P050/110**	71A4	**NMRV-P050/110**	56C
4.4	3.8	2745	10	40	400	10488	2320	**NMRV-P063/110**	71A4	**NMRV-P063/110**	56C
3.5	1.2	2771	10	50	500	3257	1659	**NMRV-P040/075**	63D4/71A4	**NMRV-P040/075**	56C
3.5	1.5	3478	20	25	500	5045	1839	**NMRV-P050/090**	71A4	**NMRV-P050/090**	56C
3.5	1.7	2976	10	50	500	4956	1839	**NMRV-P040/090**	63D4/71A4	**NMRV-P040/090**	56C
3.5	2.8	3742	20	25	500	10382	2320	**NMRV-P063/110**	71A4	**NMRV-P063/110**	56C
3.5	2.9	3622	20	25	500	10382	2320	**NMRV-P050/110**	71A4	**NMRV-P050/110**	56C
2.9	1.1	3663	20	30	600	3929	1659	**NMRV-P040/075**	63D4/71A4	**NMRV-P040/075**	56C
2.9	1.6	3835	20	30	600	6196	1839	**NMRV-P040/090**	63D4/71A4	**NMRV-P040/090**	56C
2.9	1.6	3883	20	30	600	6196	1839	**NMRV-P050/090**	71A4	**NMRV-P050/090**	56C
2.9	2.8	4012	20	30	600	11196	2320	**NMRV-P063/110**	71A4	**NMRV-P063/110**	56C
2.9	2.9	3883	20	30	600	11196	2320	**NMRV-P050/110**	71A4	**NMRV-P050/110**	56C
2.9	3.8	4071	20	30	600	15577	3035	**NMRV-P063/130**	71A4	**NMRV-P063/130**	56C
2.3	1.3	4611	25	30	750	6196	1839	**NMRV-P040/090**	63D4/71A4	**NMRV-P040/090**	56C
2.3	1.3	4672	25	30	750	6196	1839	**NMRV-P050/090**	71A4	**NMRV-P050/090**	56C
2.3	2.3	4845	25	30	750	11196	2320	**NMRV-P063/110**	71A4	**NMRV-P063/110**	56C
2.3	2.4	4672	25	30	750	11196	2320	**NMRV-P050/110**	71A4	**NMRV-P050/110**	56C
2.3	3.2	4918	25	30	750	15577	3035	**NMRV-P063/130**	71A4	**NMRV-P063/130**	56C
1.9	1.2	5170	30	30	900	6196	1839	**NMRV-P040/090**	63D4/71A4	**NMRV-P040/090**	56C
1.9	1.2	5315	30	30	900	6196	1839	**NMRV-P050/090**	71A4	**NMRV-P050/090**	56C
1.9	2.0	5523	30	30	900	11196	2320	**NMRV-P063/110**	71A4	**NMRV-P063/110**	56C
1.9	2.1	5315	30	30	900	11196	2320	**NMRV-P050/110**	71A4	**NMRV-P050/110**	56C
1.9	2.8	5606	30	30	900	15577	3035	**NMRV-P063/130**	71A4	**NMRV-P063/130**	56C

0.33 HP

Output Speed RPM	Service Factor sf	Output Torque in-lbs	Ratio Stage 1	Ratio Stage 2	Exact Ratio i	Maximum Torque in-lbs	OHL Output Shaft lbs	Gearmotor		Gear Reducer	
								Reducer	Motor	Reducer	NEMA C-face
1.9	3.1	6018	30	30	900	18587	4047	**NMRV-P063/150**	71A4	**NMRV-P063/150**	56C
1.5	1.6	6997	40	30	1200	11196	2320	**NMRV-P063/110**	71A4	**NMRV-P063/110**	56C
1.5	1.7	6602	40	30	1200	11196	2320	**NMRV-P050/110**	63D4/71A4	**NMRV-P050/110**	56C
1.5	2.2	7101	40	30	1200	15577	3035	**NMRV-P063/130**	71A4	**NMRV-P063/130**	56C
1.5	3.3	7254	30	40	1200	23631	4047	**NMRV-P063/150**	71A4	**NMRV-P063/150**	56C
1.2	1.4	7767	50	30	1500	11196	2320	**NMRV-P050/110**	63D4/71A4	**NMRV-P050/110**	56C
1.2	1.4	8261	50	30	1500	11196	2320	**NMRV-P063/110**	71A4	**NMRV-P063/110**	56C
1.2	1.9	8384	50	30	1500	15577	3035	**NMRV-P063/130**	71A4	**NMRV-P063/130**	56C
1.2	2.4	8519	30	50	1500	20622	4047	**NMRV-P063/150**	71A4	**NMRV-P063/150**	56C
1.0	1.2	9362	60	30	1800	11196	2320	**NMRV-P063/110**	71A4	**NMRV-P063/110**	56C
1.0	1.3	8737	60	30	1800	11196	2320	**NMRV-P050/110**	63D4/71A4	**NMRV-P050/110**	56C
1.0	1.6	9501	60	30	1800	15577	3035	**NMRV-P063/130**	71A4	**NMRV-P063/130**	56C
1.0	1.8	10200	60	30	1800	18587	4047	**NMRV-P063/150**	71A4	**NMRV-P063/150**	56C
0.7	1.2	12109	60	40	2400	14604	3035	**NMRV-P063/130**	71A4	**NMRV-P063/130**	56C
0.7	1.9	12296	60	40	2400	23631	4047	**NMRV-P063/150**	71A4	**NMRV-P063/150**	56C
0.6	1.4	14438	60	50	3000	20622	4047	**NMRV-P063/150**	71A4	**NMRV-P063/150**	56C
0.4	1.0	20026	100	50	5000	20622	4047	**NMRV-P063/150**	71A4	**NMRV-P063/150**	56C
0.4	1.2	17773	80	50	4000	20622	4047	**NMRV-P063/150**	71A4	**NMRV-P063/150**	56C

0.5 HP

Output Speed RPM	Service Factor sf	Output Torque in-lbs	Ratio Stage 1	Ratio Stage 2	Exact Ratio i	Maximum Torque in-lbs	OHL Output Shaft lbs	Gearmotor		Gear Reducer	
								Reducer	Motor	Reducer	NEMA C-face
18	1.0	1200	10	10	100	1213	854	**NMRV040/050**	71B4	**NMRV040/050**	56C
18	1.9	1200	10	10	100	2277	1117	**NMRV-P040/063**	71B4	**NMRV-P040/063**	56C
18	2.4	1215	10	10	100	2961	1318	**NMRV-P040/075**	71B4	**NMRV-P040/075**	56C
18	2.4	1246	10	10	100	3035	1458	**NMRV-P040/090**	71B4	**NMRV-P040/090**	56C
12	1.4	1686	10	15	150	2300	1278	**NMRV-P040/063**	71B4	**NMRV-P040/063**	56C
12	2.2	1732	10	15	150	3761	1509	**NMRV-P040/075**	71B4	**NMRV-P040/075**	56C
12	2.4	1777	10	15	150	4330	1669	**NMRV-P040/090**	71B4	**NMRV-P040/090**	56C
12	3.2	1819	10	15	150	5841	1669	**NMRV-P050/090**	71B4	**NMRV-P050/090**	56C
8.8	1.1	2127	10	20	200	2239	1407	**NMRV-P040/063**	71B4	**NMRV-P040/063**	56C
8.8	1.7	2187	10	20	200	3715	1659	**NMRV-P040/075**	71B4	**NMRV-P040/075**	56C
8.8	2.3	2332	10	20	200	5399	1838	**NMRV-P050/090**	71B4	**NMRV-P050/090**	56C
8.8	2.4	2279	10	20	200	5399	1838	**NMRV-P040/090**	71B4	**NMRV-P040/090**	56C
7.0	1.3	2620	10	25	250	3359	1659	**NMRV-P040/075**	71B4	**NMRV-P040/075**	56C
7.0	1.8	2734	10	25	250	5045	1839	**NMRV-P040/090**	71B4	**NMRV-P040/090**	56C
7.0	1.8	2799	10	25	250	5045	1839	**NMRV-P050/090**	71B4	**NMRV-P050/090**	56C
7.0	3.5	2930	10	25	250	10382	2320	**NMRV-P063/110**	71B4	**NMRV-P063/110**	56C
7.0	3.6	2915	10	25	250	10382	2320	**NMRV-P050/110**	71B4	**NMRV-P050/110**	56C
5.8	1.3	2917	10	30	300	3929	1659	**NMRV-P040/075**	71B4	**NMRV-P040/075**	56C
5.8	2.0	3053	10	30	300	6196	1839	**NMRV-P040/090**	71B4	**NMRV-P040/090**	56C
5.8	2.0	3125	10	30	300	6196	1839	**NMRV-P050/090**	71B4	**NMRV-P050/090**	56C
5.8	3.6	3125	10	30	300	11196	2320	**NMRV-P050/110**	71B4	**NMRV-P050/110**	56C
5.8	3.6	3140	10	30	300	11196	2320	**NMRV-P063/110**	71B4	**NMRV-P063/110**	56C
4.4	1.0	3585	10	40	400	3664	1659	**NMRV-P040/075**	71B4	**NMRV-P040/075**	56C
4.4	1.4	3767	10	40	400	5399	1839	**NMRV-P040/090**	71B4	**NMRV-P040/090**	56C
4.4	1.4	3856	10	40	400	5399	1839	**NMRV-P050/090**	71B4	**NMRV-P050/090**	56C
4.4	2.6	4042	10	40	400	10488	2320	**NMRV-P050/110**	71B4	**NMRV-P050/110**	56C
4.4	2.6	4062	10	40	400	10488	2320	**NMRV-P063/110**	71B4	**NMRV-P063/110**	56C
4.4	3.6	4062	10	40	400	14604	3035	**NMRV-P063/130**	71B4	**NMRV-P063/130**	56C

0.5 HP

Output Speed RPM	Service Factor sf	Output Torque in-lbs	Ratio Stage 1	Ratio Stage 2	Exact Ratio i	Maximum Torque in-lbs	OHL Output Shaft lbs	Gearmotor		Gear Reducer	
								Reducer	Motor	Reducer	NEMA C-face
3.5	1.1	4405	10	50	500	4956	1839	**NMRV-P040/090**	71B4	**NMRV-P040/090**	56C
3.5	1.9	5361	20	25	500	10382	2320	**NMRV-P050/110**	71B4	**NMRV-P050/110**	56C
3.5	1.9	5538	20	25	500	10382	2320	**NMRV-P063/110**	71B4	**NMRV-P063/110**	56C
3.5	2.8	4844	10	50	500	13719	3035	**NMRV-P063/130**	71B4	**NMRV-P063/130**	56C
2.9	1.1	5675	20	30	600	6196	1839	**NMRV-P040/090**	71B4	**NMRV-P040/090**	56C
2.9	1.1	5747	20	30	600	6196	1839	**NMRV-P050/090**	71B4	**NMRV-P050/090**	56C
2.9	1.9	5747	20	30	600	11196	2320	**NMRV-P050/110**	71B4	**NMRV-P050/110**	56C
2.9	1.9	5937	20	30	600	11196	2320	**NMRV-P063/110**	71B4	**NMRV-P063/110**	56C
2.9	2.6	6026	20	30	600	15577	3035	**NMRV-P063/130**	71B4	**NMRV-P063/130**	56C
2.9	3.9	5990	15	40	600	23631	4047	**NMRV-P063/150**	71B4	**NMRV-P063/150**	56C
2.3	1.6	6915	25	30	750	11196	2320	**NMRV-P050/110**	71B4	**NMRV-P050/110**	56C
2.3	1.6	7171	25	30	750	11196	2320	**NMRV-P063/110**	71B4	**NMRV-P063/110**	56C
2.3	2.1	7278	25	30	750	15577	3035	**NMRV-P063/130**	71B4	**NMRV-P063/130**	56C
2.3	2.9	7034	15	50	750	20622	4047	**NMRV-P063/150**	71B4	**NMRV-P063/150**	56C
1.9	1.4	7867	30	30	900	11196	2320	**NMRV-P050/110**	71B4	**NMRV-P050/110**	56C
1.9	1.4	8174	30	30	900	11196	2320	**NMRV-P063/110**	71B4	**NMRV-P063/110**	56C
1.9	1.9	8296	30	30	900	15577	3035	**NMRV-P063/130**	71B4	**NMRV-P063/130**	56C
1.9	2.1	8907	30	30	900	18587	4047	**NMRV-P063/150**	71B4	**NMRV-P063/150**	56C
1.5	1.1	9770	40	30	1200	11196	2320	**NMRV-P050/110**	71B4	**NMRV-P050/110**	56C
1.5	1.1	10355	40	30	1200	11196	2320	**NMRV-P063/110**	71B4	**NMRV-P063/110**	56C
1.5	1.5	10510	40	30	1200	15577	3035	**NMRV-P063/130**	71B4	**NMRV-P063/130**	56C
1.5	2.2	10737	30	40	1200	23631	4047	**NMRV-P063/150**	71B4	**NMRV-P063/150**	56C
1.2	1.3	12408	50	30	1500	15577	3035	**NMRV-P063/130**	71B4	**NMRV-P063/130**	56C
1.2	1.6	12607	30	50	1500	20622	4047	**NMRV-P063/150**	71B4	**NMRV-P063/150**	56C
1.0	1.1	14062	60	30	1800	15577	3035	**NMRV-P063/130**	71B4	**NMRV-P063/130**	56C
1.0	1.2	15096	60	30	1800	18587	4047	**NMRV-P063/150**	71B4	**NMRV-P063/150**	56C
0.7	1.3	18198	60	40	2400	23631	4047	**NMRV-P063/150**	71B4	**NMRV-P063/150**	56C

0.75 HP

Output Speed RPM	Service Factor sf	Output Torque in-lbs	Ratio Stage 1	Ratio Stage 2	Exact Ratio i	Maximum Torque in-lbs	OHL Output Shaft lbs	Gearmotor		Gear Reducer	
								Reducer	Motor	Reducer	NEMA C-face
18	1.3	1784	10	10	100	2277	1117	**NMRV-P040/063**	71C4	**NMRV-P040/063**	56C
18	1.6	1806	10	10	100	2961	1318	**NMRV-P040/075**	71C4	**NMRV-P040/075**	56C
18	1.6	1852	10	10	100	3035	1458	**NMRV-P040/090**	71C4	**NMRV-P040/090**	56C
18	2.8	1895	10	10	100	5222	1458	**NMRV-P050/090**	71C4/80A4	**NMRV-P050/090**	56C
18	2.9	1895	10	10	100	5446	1843	**NMRV-P050/110**	71C4/80A4	**NMRV-P050/110**	56C
12	1.5	2574	10	15	150	3761	1509	**NMRV-P040/075**	71C4	**NMRV-P040/075**	56C
12	1.6	2642	10	15	150	4330	1669	**NMRV-P040/090**	71C4	**NMRV-P040/090**	56C
12	2.2	2704	10	15	150	5841	1669	**NMRV-P050/090**	71C4/80A4	**NMRV-P050/090**	56C
12	2.9	2739	10	15	150	7871	2110	**NMRV-P050/110**	71C4/80A4	**NMRV-P050/110**	56C
12	3.8	2752	10	15	150	10585	2110	**NMRV-P063/110**	71C4/80A4	**NMRV-P063/110**	56C
8.8	1.1	3252	10	20	200	3715	1659	**NMRV-P040/075**	71C4	**NMRV-P040/075**	56C
8.8	1.6	3387	10	20	200	5399	1838	**NMRV-P040/090**	71C4	**NMRV-P040/090**	56C
8.8	1.6	3467	10	20	200	5399	1838	**NMRV-P050/090**	71C4/80A4	**NMRV-P050/090**	56C
8.8	2.8	3559	10	20	200	10081	2320	**NMRV-P050/110**	71C4/80A4	**NMRV-P050/110**	56C
8.8	2.8	3577	10	20	200	10081	2320	**NMRV-P063/110**	71C4/80A4	**NMRV-P063/110**	56C
8.8	4.0	3577	10	20	200	14161	3035	**NMRV-P063/130**	71C4/80A4	**NMRV-P063/130**	56C
7.0	1.2	4064	10	25	250	5045	1839	**NMRV-P040/090**	71C4	**NMRV-P040/090**	56C
7.0	1.2	4160	10	25	250	5045	1839	**NMRV-P050/090**	71C4/80A4	**NMRV-P050/090**	56C
7.0	2.4	4333	10	25	250	10382	2320	**NMRV-P050/110**	71C4/80A4	**NMRV-P050/110**	56C

0.75 HP

Output Speed RPM	Service Factor sf	Output Torque in-lbs	Ratio Stage 1	Ratio Stage 2	Exact Ratio i	Maximum Torque in-lbs	OHL Output Shaft lbs	Gearmotor		Gear Reducer	
								Reducer	Motor	Reducer	NEMA C-face
7.0	2.4	4355	10	25	250	10382	2320	**NMRV-P063/110**	71C4/80A4	**NMRV-P063/110**	56C
7.0	3.1	4355	10	25	250	13542	3035	**NMRV-P063/130**	71C4/80A4	**NMRV-P063/130**	56C
5.8	1.3	4645	10	30	300	6196	1839	**NMRV-P050/090**	71C4/80A4	**NMRV-P050/090**	56C
5.8	1.4	4539	10	30	300	6196	1839	**NMRV-P040/090**	71C4	**NMRV-P040/090**	56C
5.8	2.4	4645	10	30	300	11196	2320	**NMRV-P050/110**	71C4/80A4	**NMRV-P050/110**	56C
5.8	2.4	4668	10	30	300	11196	2320	**NMRV-P063/110**	71C4/80A4	**NMRV-P063/110**	56C
5.8	3.3	4738	10	30	300	15577	3035	**NMRV-P063/130**	71C4/80A4	**NMRV-P063/130**	56C
5.8	3.7	5194	15	20	300	19038	4047	**NMRV-P063/150**	71C4/80A4	**NMRV-P063/150**	56C
4.4	1.7	6009	10	40	400	10488	2320	**NMRV-P050/110**	71C4/80A4	**NMRV-P050/110**	56C
4.4	1.7	6039	10	40	400	10488	2320	**NMRV-P063/110**	71C4/80A4	**NMRV-P063/110**	56C
4.4	2.4	6039	10	40	400	14604	3035	**NMRV-P063/130**	71C4/80A4	**NMRV-P063/130**	56C
4.4	3.9	6131	10	40	400	23631	4047	**NMRV-P063/150**	71C4/80A4	**NMRV-P063/150**	56C
3.5	1.3	7969	20	25	500	10382	2320	**NMRV-P050/110**	71C4/80A4	**NMRV-P050/110**	56C
3.5	1.3	8233	20	25	500	10382	2320	**NMRV-P063/110**	71C4/80A4	**NMRV-P063/110**	56C
3.5	1.9	7200	10	50	500	13719	3035	**NMRV-P063/130**	71C4/80A4	**NMRV-P063/130**	56C
3.5	2.9	7200	10	50	500	20622	4047	**NMRV-P063/150**	71C4/80A4	**NMRV-P063/150**	56C
2.9	1.3	8543	20	30	600	11196	2320	**NMRV-P050/110**	71C4/80A4	**NMRV-P050/110**	56C
2.9	1.3	8825	20	30	600	11196	2320	**NMRV-P063/110**	71C4/80A4	**NMRV-P063/110**	56C
2.9	1.7	8957	20	30	600	15577	3035	**NMRV-P063/130**	71C4/80A4	**NMRV-P063/130**	56C
2.9	2.7	8904	15	40	600	23631	4047	**NMRV-P063/150**	71C4/80A4	**NMRV-P063/150**	56C
2.3	1.1	10279	25	30	750	11196	2320	**NMRV-P050/110**	71C4/80A4	**NMRV-P050/110**	56C
2.3	1.1	10660	25	30	750	11196	2320	**NMRV-P063/110**	71C4/80A4	**NMRV-P063/110**	56C
2.3	1.4	10819	25	30	750	15577	3035	**NMRV-P063/130**	71C4/80A4	**NMRV-P063/130**	56C
2.3	2.0	10456	15	50	750	20622	4047	**NMRV-P063/150**	71C4/80A4	**NMRV-P063/150**	56C
1.9	1.3	12333	30	30	900	15577	3035	**NMRV-P063/130**	71C4/80A4	**NMRV-P063/130**	56C
1.9	1.4	13239	30	30	900	18587	4047	**NMRV-P063/150**	71C4/80A4	**NMRV-P063/150**	56C
1.5	1.5	15960	30	40	1200	23631	4047	**NMRV-P063/150**	71C4/80A4	**NMRV-P063/150**	56C
1.2	1.1	18741	30	50	1500	20622	4047	**NMRV-P063/150**	71C4/80A4	**NMRV-P063/150**	56C

1 HP

Output Speed RPM	Service Factor sf	Output Torque in-lbs	Ratio Stage 1	Ratio Stage 2	Exact Ratio i	Maximum Torque in-lbs	OHL Output Shaft lbs	Gearmotor		Gear Reducer	
								Reducer	Motor	Reducer	NEMA C-face
18	1.2	2463	10	10	100	2961	1318	**-**	-	**NMRV-P040/075**	56C
18	1.2	2525	10	10	100	3035	1458	**-**	-	**NMRV-P040/090**	56C
18	2.0	2584	10	10	100	5222	1458	**NMRV-P050/090**	80B4	**NMRV-P050/090**	56C
18	2.1	2584	10	10	100	5446	1843	**NMRV-P050/110**	80B4	**NMRV-P050/110**	56C
18	3.5	2597	10	10	100	9090	1843	**NMRV-P063/110**	80B4	**NMRV-P063/110**	56C/143/145TC
18	3.5	2629	10	10	100	9201	2410	**NMRV-P063/130**	80B4	**NMRV-P063/130**	56C/143/145TC
12	1.1	3510	10	15	150	3761	1509	**-**	-	**NMRV-P040/075**	56C
12	1.2	3603	10	15	150	4330	1669	**-**	-	**NMRV-P040/090**	56C
12	1.6	3687	10	15	150	5841	1669	**NMRV-P050/090**	80B4	**NMRV-P050/090**	56C
12	2.1	3735	10	15	150	7871	2110	**NMRV-P050/110**	80B4	**NMRV-P050/110**	56C
12	2.8	3753	10	15	150	10585	2110	**NMRV-P063/110**	80B4	**NMRV-P063/110**	56C/143/145TC
12	3.5	3705	10	15	150	12969	2759	**NMRV-P063/130**	80B4	**NMRV-P063/130**	56C/143/145TC
8.8	1.1	4727	10	20	200	5399	1838	**NMRV-P050/090**	80B4	**NMRV-P050/090**	56C
8.8	1.2	4619	10	20	200	5399	1838	**-**	-	**NMRV-P040/090**	56C
8.8	2.1	4853	10	20	200	10081	2320	**NMRV-P050/110**	80B4	**NMRV-P050/110**	56C
8.8	2.1	4877	10	20	200	10081	2320	**NMRV-P063/110**	80B4	**NMRV-P063/110**	56C/143/145TC
8.8	2.9	4877	10	20	200	14161	3035	**NMRV-P063/130**	80B4	**NMRV-P063/130**	56C/143/145TC
8.8	3.5	4877	10	20	200	17071	4047	**NMRV-P063/150**	80B4	**NMRV-P063/150**	56C/143/145TC

1 HP

Output Speed RPM	Service Factor sf	Output Torque in-lbs	Ratio Stage 1	Ratio Stage 2	Exact Ratio i	Maximum Torque in-lbs	OHL Output Shaft lbs	Gearmotor		Gear Reducer	
								Reducer	Motor	Reducer	NEMA C-face
7.0	1.7	5938	10	25	250	10382	2320	**NMRV-P063/110**	80B4	**NMRV-P063/110**	56C/143/145TC
7.0	1.8	5909	10	25	250	10382	2320	**NMRV-P050/110**	80B4	**NMRV-P050/110**	56C
7.0	2.3	5938	10	25	250	13542	3035	**NMRV-P063/130**	80B4	**NMRV-P063/130**	56C/143/145TC
7.0	3.1	5938	10	25	250	18144	4047	**NMRV-P063/150**	80B4	**NMRV-P063/150**	56C/143/145TC
5.8	1.0	6189	10	30	300	6196	1839	**-**	-	**NMRV-P040/090**	56C
5.8	1.8	6335	10	30	300	11196	2320	**NMRV-P050/110**	80B4	**NMRV-P050/110**	56C
5.8	1.8	6366	10	30	300	11196	2320	**NMRV-P063/110**	80B4	**NMRV-P063/110**	56C/143/145TC
5.8	2.4	6461	10	30	300	15577	3035	**NMRV-P063/130**	80B4	**NMRV-P063/130**	56C/143/145TC
5.8	2.7	7083	15	20	300	19038	4047	**NMRV-P063/150**	80B4	**NMRV-P063/150**	56C/143/145TC
4.4	1.3	8194	10	40	400	10488	2320	**NMRV-P050/110**	80B4	**NMRV-P050/110**	56C
4.4	1.3	8234	10	40	400	10488	2320	**NMRV-P063/110**	80B4	**NMRV-P063/110**	56C/143/145TC
4.4	1.8	8234	10	40	400	14604	3035	**NMRV-P063/130**	80B4	**NMRV-P063/130**	56C/143/145TC
4.4	2.8	8361	10	40	400	23631	4047	**NMRV-P063/150**	80B4	**NMRV-P063/150**	56C/143/145TC
3.5	1.4	9818	10	50	500	13719	3035	**NMRV-P063/130**	80B4	**NMRV-P063/130**	56C/143/145TC
3.5	2.1	9818	10	50	500	20622	4047	**NMRV-P063/150**	80B4	**NMRV-P063/150**	56C/143/145TC
2.9	1.3	12214	20	30	600	15577	3035	**NMRV-P063/130**	80B4	**NMRV-P063/130**	56C/143/145TC
2.9	1.9	12142	15	40	600	23631	4047	**NMRV-P063/150**	80B4	**NMRV-P063/150**	56C/143/145TC
2.3	1.1	14753	25	30	750	15577	3035	**NMRV-P063/130**	80B4	**NMRV-P063/130**	56C/143/145TC
2.3	1.4	14258	15	50	750	20622	4047	**NMRV-P063/150**	80B4	**NMRV-P063/150**	56C/143/145TC
1.9	1.0	18054	30	30	900	18587	4047	**NMRV-P063/150**	80B4	**NMRV-P063/150**	56C/143/145TC
1.5	1.1	21763	30	40	1200	23631	4047	**NMRV-P063/150**	80B4	**NMRV-P063/150**	56C/143/145TC

1.5 HP

Output Speed RPM	Service Factor sf	Output Torque in-lbs	Ratio Stage 1	Ratio Stage 2	Exact Ratio i	Maximum Torque in-lbs	OHL Output Shaft lbs	Gearmotor		Gear Reducer	
								Reducer	Motor	Reducer	NEMA C-face
18	1.4	3790	10	10	100	5222	1458	**NMRV-P050/090**	80D4	**NMRV-P050/090**	56C
18	1.4	3790	10	10	100	5446	1843	**NMRV-P050/110**	80D4	**NMRV-P050/110**	56C
18	2.4	3809	10	10	100	9090	1843	**NMRV-P063/110**	80D4/90S4	**NMRV-P063/110**	56C/143/145TC
18	2.4	3855	10	10	100	9201	2410	**NMRV-P063/130**	80D4/90S4	**NMRV-P063/130**	56C/143/145TC
12	1.1	5408	10	15	150	5841	1669	**NMRV-P050/090**	80D4	**NMRV-P050/090**	56C
12	1.4	5477	10	15	150	7871	2110	**NMRV-P050/110**	80D4	**NMRV-P050/110**	56C
12	1.9	5504	10	15	150	10585	2110	**NMRV-P063/110**	80D4/90S4	**NMRV-P063/110**	56C/143/145TC
12	2.4	5435	10	15	150	12969	2759	**NMRV-P063/130**	80D4/90S4	**NMRV-P063/130**	56C/143/145TC
12	3.0	5488	7.5	20	150	16575	4047	**NMRV-P063/150**	80D4/90S4	**NMRV-P063/150**	56C/143/145TC
8.8	1.4	7118	10	20	200	10081	2320	**NMRV-P050/110**	80D4	**NMRV-P050/110**	56C
8.8	1.4	7153	10	20	200	10081	2320	**NMRV-P063/110**	80D4/90S4	**NMRV-P063/110**	56C/143/145TC
8.8	2.0	7153	10	20	200	14161	3035	**NMRV-P063/130**	80D4/90S4	**NMRV-P063/130**	56C/143/145TC
8.8	2.4	7153	10	20	200	17071	4047	**NMRV-P063/150**	80D4/90S4	**NMRV-P063/150**	56C/143/145TC
7.0	1.2	8667	10	25	250	10382	2320	**NMRV-P050/110**	80D4	**NMRV-P050/110**	56C
7.0	1.2	8709	10	25	250	10382	2320	**NMRV-P063/110**	80D4/90S4	**NMRV-P063/110**	56C/143/145TC
7.0	1.6	8709	10	25	250	13542	3035	**NMRV-P063/130**	80D4/90S4	**NMRV-P063/130**	56C/143/145TC
7.0	2.1	8709	10	25	250	18144	4047	**NMRV-P063/150**	80D4/90S4	**NMRV-P063/150**	56C/143/145TC
5.8	1.2	9291	10	30	300	11196	2320	**NMRV-P050/110**	80D4	**NMRV-P050/110**	56C
5.8	1.2	9337	10	30	300	11196	2320	**NMRV-P063/110**	80D4/90S4	**NMRV-P063/110**	56C/143/145TC
5.8	1.6	9476	10	30	300	15577	3035	**NMRV-P063/130**	80D4/90S4	**NMRV-P063/130**	56C/143/145TC
5.8	1.8	10388	15	20	300	19038	4047	**NMRV-P063/150**	80D4/90S4	**NMRV-P063/150**	56C/143/145TC
4.4	1.2	12077	10	40	400	14604	3035	**NMRV-P063/130**	80D4/90S4	**NMRV-P063/130**	56C/143/145TC
4.4	1.9	12263	10	40	400	23631	4047	**NMRV-P063/150**	80D4/90S4	**NMRV-P063/150**	56C/143/145TC
3.5	1.4	14400	10	50	500	20622	4047	**NMRV-P063/150**	80D4/90S4	**NMRV-P063/150**	56C/143/145TC
2.9	1.3	17808	15	40	600	23631	4047	**NMRV-P063/150**	80D4/90S4	**NMRV-P063/150**	56C/143/145TC

2 HP

Output Speed RPM	Service Factor sf	Output Torque in-lbs	Ratio Stage 1	Ratio Stage 2	Exact Ratio i	Maximum Torque in-lbs	OHL Output Shaft lbs	Gearmotor		Gear Reducer	
								Reducer	Motor	Reducer	NEMA C-face
18	1.0	5169	10	10	100	5222	1458	**-**	-	**NMRV-P050/090**	56C
18	1.1	5169	10	10	100	5446	1843	**-**	-	**NMRV-P050/110**	56C
18	1.8	5194	10	10	100	9090	1843	**NMRV-P063/110**	90LA4	**NMRV-P063/110**	56C/143/145TC
18	1.8	5257	10	10	100	9201	2410	**NMRV-P063/130**	90LA4	**NMRV-P063/130**	56C/143/145TC
12	1.1	7469	10	15	150	7871	2110	**-**	-	**NMRV-P050/110**	56C
12	1.4	7506	10	15	150	10585	2110	**NMRV-P063/110**	90LA4	**NMRV-P063/110**	56C/143/145TC
12	1.8	7411	10	15	150	12969	2759	**NMRV-P063/130**	90LA4	**NMRV-P063/130**	56C/143/145TC
12	2.2	7483	7.5	20	150	16575	4047	**NMRV-P063/150**	90LA4	**NMRV-P063/150**	56C/143/145TC
8.8	1.0	9755	10	20	200	10081	2320	**NMRV-P063/110**	90LA4	**NMRV-P063/110**	56C/143/145TC
8.8	1.0	9707	10	20	200	10081	2320	**-**	-	**NMRV-P050/110**	56C
8.8	1.5	9755	10	20	200	14161	3035	**NMRV-P063/130**	90LA4	**NMRV-P063/130**	56C/143/145TC
8.8	1.8	9755	10	20	200	17071	4047	**NMRV-P063/150**	90LA4	**NMRV-P063/150**	56C/143/145TC
7.0	1.1	11877	10	25	250	13542	3035	**NMRV-P063/130**	90LA4	**NMRV-P063/130**	56C/143/145TC
7.0	1.5	11877	10	25	250	18144	4047	**NMRV-P063/150**	90LA4	**NMRV-P063/150**	56C/143/145TC
5.8	1.2	12922	10	30	300	15577	3035	**NMRV-P063/130**	90LA4	**NMRV-P063/130**	56C/143/145TC
5.8	1.3	14166	15	20	300	19038	4047	**NMRV-P063/150**	90LA4	**NMRV-P063/150**	56C/143/145TC
4.4	1.4	16722	10	40	400	23631	4047	**NMRV-P063/150**	90LA4	**NMRV-P063/150**	56C/143/145TC
3.5	1.1	19636	10	50	500	20622	4047	**NMRV-P063/150**	90LA4	**NMRV-P063/150**	56C/143/145TC

Double Worm Gear Reducer Ratings - Input Speed 875 rpm

Maximum Torque lbs*in	Output Speed RPM	Ratio Stage 1	Ratio Stage 2	Total Ratio i	Maximum Power HP	OHL		Gear Reducer	
						Output Shaft lbs	Input Shaft lbs	Motorized Input	Shaft Input
283	8.8	10	10	100	0.06	323	-	NMRV025/030	-
248	5.8	7.5	20	150	0.04	407	-	NMRV025/030	-
248	4.4	10	20	200	0.03	407	-	NMRV025/030	-
301	3.5	10	25	250	0.04	411	-	NMRV025/030	-
274	2.9	10	30	300	0.03	411	-	NMRV025/030	-
248	2.2	20	20	400	0.02	407	-	NMRV025/030	-
301	1.8	20	25	500	0.02	411	-	NMRV025/030	-
274	1.5	20	30	600	0.02	411	-	NMRV025/030	-
301	1.2	30	25	750	0.02	411	-	NMRV025/030	-
204	1	15	60	900	0.01	411	-	NMRV025/030	-
248	0.7	30	40	1200	0.009	411	-	NMRV025/030	-
230	0.6	30	50	1500	0.008	411	-	NMRV025/030	-
274	0.5	60	30	1800	0.008	411	-	NMRV025/030	-
248	0.4	60	40	2400	0.006	411	-	NMRV025/030	-
230	0.3	60	50	3000	0.005	411	-	NMRV025/030	-
177	0.2	50	80	4000	0.003	411	-	NMRV025/030	-
628	8.8	10	10	100	0.14	622	-	NMRV025/040	-
575	5.8	7.5	20	150	0.09	784	-	NMRV025/040	-
575	4.4	10	20	200	0.07	784	-	NMRV025/040	-
540	3.5	10	25	250	0.06	785	-	NMRV025/040	-
646	2.9	10	30	300	0.06	785	-	NMRV025/040	-
575	2.2	20	20	400	0.04	784	-	NMRV025/040	-
540	1.8	20	25	500	0.03	785	-	NMRV025/040	-
646	1.5	20	30	600	0.03	785	-	NMRV025/040	-
540	1.2	30	25	750	0.02	785	-	NMRV025/040	-
646	1	30	30	900	0.03	785	-	NMRV025/040	-
575	0.7	30	40	1200	0.02	785	-	NMRV025/040	-
531	0.6	30	50	1500	0.02	785	-	NMRV025/040	-
646	0.5	60	30	1800	0.02	785	-	NMRV025/040	-
575	0.4	60	40	2400	0.012	785	-	NMRV025/040	-
531	0.3	60	50	3000	0.01	785	-	NMRV025/040	-
425	0.2	50	80	4000	0.007	785	-	NMRV025/040	-
381	0.2	50	100	5000	0.005	785	-	NMRV025/040	-
628	8.8	10	10	100	0.14	622	47	NMRV030/040	NRV030/040
637	5.8	10	15	150	0.1	713	47	NMRV030/040	NRV030/040
575	4.4	10	20	200	0.07	784	47	NMRV030/040	NRV030/040
540	3.5	10	25	250	0.06	785	47	NMRV030/040	NRV030/040
646	2.9	10	30	300	0.06	785	47	NMRV030/040	NRV030/040
575	2.2	10	40	400	0.05	785	47	NMRV030/040	NRV030/040
540	1.8	20	25	500	0.03	785	47	NMRV030/040	NRV030/040
646	1.5	20	30	600	0.04	785	47	NMRV030/040	NRV030/040
646	1.2	25	30	750	0.03	785	47	NMRV030/040	NRV030/040
646	1	30	30	900	0.03	785	47	NMRV030/040	NRV030/040
646	0.7	40	30	1200	0.02	785	47	NMRV030/040	NRV030/040
646	0.6	50	30	1500	0.02	785	47	NMRV030/040	NRV030/040
646	0.5	60	30	1800	0.02	785	47	NMRV030/040	NRV030/040
575	0.4	60	40	2400	0.013	785	47	NMRV030/040	NRV030/040
531	0.3	60	50	3000	0.01	785	47	NMRV030/040	NRV030/040
425	0.2	50	80	4000	0.007	785	47	NMRV030/040	NRV030/040
381	0.2	50	100	5000	0.006	785	47	NMRV030/040	NRV030/040
1213	8.8	10	10	100	0.26	854	47	NMRV030/050	NRV030/050
1195	5.8	10	15	150	0.19	978	47	NMRV030/050	NRV030/050
1062	4.4	10	20	200	0.13	1076	47	NMRV030/050	NRV030/050
974	3.5	10	25	250	0.1	1088	47	NMRV030/050	NRV030/050
1283	2.9	10	30	300	0.12	1088	47	NMRV030/050	NRV030/050

Maximum Torque lbs*in	Output Speed RPM	Ratio Stage 1	Ratio Stage 2	Total Ratio i	Maximum Power HP	OHL		Gear Reducer	
						Output Shaft lbs	Input Shaft lbs	Motorized Input	Shaft Input
1097	2.2	10	40	400	0.09	1088	47	NMRV030/050	NRV030/050
1062	1.8	10	50	500	0.07	1088	47	NMRV030/050	NRV030/050
1283	1.5	20	30	600	0.07	1088	47	NMRV030/050	NRV030/050
1283	1.2	25	30	750	0.06	1088	47	NMRV030/050	NRV030/050
1283	1	30	30	900	0.05	1088	47	NMRV030/050	NRV030/050
1283	0.7	40	30	1200	0.04	1088	47	NMRV030/050	NRV030/050
1283	0.6	50	30	1500	0.04	1088	47	NMRV030/050	NRV030/050
1283	0.5	60	30	1800	0.03	1088	47	NMRV030/050	NRV030/050
1097	0.4	60	40	2400	0.02	1088	47	NMRV030/050	NRV030/050
1062	0.3	60	50	3000	0.02	1088	47	NMRV030/050	NRV030/050
726	0.2	50	80	4000	0.012	1088	47	NMRV030/050	NRV030/050
699	0.2	50	100	5000	0.01	1088	47	NMRV030/050	NRV030/050
1213	8.8	10	10	100	0.26	854	79	NMRV040/050	NRV040/050
1195	5.8	10	15	150	0.18	978	79	NMRV040/050	NRV040/050
1062	4.4	10	20	200	0.13	1076	79	NMRV040/050	NRV040/050
974	3.5	10	25	250	0.1	1088	79	NMRV040/050	NRV040/050
1283	2.9	10	30	300	0.12	1088	79	NMRV040/050	NRV040/050
1097	2.2	10	40	400	0.08	1088	79	NMRV040/050	NRV040/050
1213	1.8	50	10	500	0.07	854	79	NMRV040/050	NRV040/050
1283	1.5	20	30	600	0.07	1088	79	NMRV040/050	NRV040/050
1283	1.2	25	30	750	0.05	1088	79	NMRV040/050	NRV040/050
1195	1	60	15	900	0.05	978	79	NMRV040/050	NRV040/050
1283	0.7	40	30	1200	0.04	1088	79	NMRV040/050	NRV040/050
1283	0.6	50	30	1500	0.03	1088	79	NMRV040/050	NRV040/050
1283	0.5	60	30	1800	0.03	1088	79	NMRV040/050	NRV040/050
1097	0.4	60	40	2400	0.02	1088	79	NMRV040/050	NRV040/050
1062	0.3	60	50	3000	0.02	1088	79	NMRV040/050	NRV040/050
1062	0.2	80	50	4000	0.02	1088	79	NMRV040/050	NRV040/050
1062	0.2	100	50	5000	0.013	1088	79	NMRV040/050	NRV040/050
1470	8.8	10	10	100	0.32	1117	47	NMRV-P030/063	NRV-P030/063
2065	5.8	10	15	150	0.32	1278	47	NMRV-P030/063	NRV-P030/063
2239	4.4	10	20	200	0.27	1407	47	NMRV-P030/063	NRV-P030/063
2045	3.5	10	25	250	0.21	1410	47	NMRV-P030/063	NRV-P030/063
2259	2.9	7.5	40	300	0.22	1410	47	NMRV-P030/063	NRV-P030/063
2259	2.2	10	40	400	0.17	1410	47	NMRV-P030/063	NRV-P030/063
2089	1.8	10	50	500	0.14	1410	47	NMRV-P030/063	NRV-P030/063
2398	1.5	20	30	600	0.13	1410	47	NMRV-P030/063	NRV-P030/063
2398	1.2	25	30	750	0.11	1410	47	NMRV-P030/063	NRV-P030/063
2398	1	30	30	900	0.1	1410	47	NMRV-P030/063	NRV-P030/063
2398	0.7	40	30	1200	0.08	1410	47	NMRV-P030/063	NRV-P030/063
2398	0.6	50	30	1500	0.07	1410	47	NMRV-P030/063	NRV-P030/063
2398	0.5	60	30	1800	0.06	1410	47	NMRV-P030/063	NRV-P030/063
2259	0.4	60	40	2400	0.05	1410	47	NMRV-P030/063	NRV-P030/063
2089	0.3	60	50	3000	0.04	1410	47	NMRV-P030/063	NRV-P030/063
2089	0.2	80	50	4000	0.03	1410	47	NMRV-P030/063	NRV-P030/063
1328	0.2	50	100	5000	0.02	1410	47	NMRV-P030/063	NRV-P030/063
2277	8.8	10	10	100	0.48	1117	79	NMRV-P040/063	NRV-P040/063
2300	5.8	10	15	150	0.35	1278	79	NMRV-P040/063	NRV-P040/063
2239	4.4	10	20	200	0.27	1407	79	NMRV-P040/063	NRV-P040/063
2045	3.5	10	25	250	0.2	1410	79	NMRV-P040/063	NRV-P040/063
2398	2.9	10	30	300	0.22	1410	79	NMRV-P040/063	NRV-P040/063
2259	2.2	10	40	400	0.17	1410	79	NMRV-P040/063	NRV-P040/063
2045	1.8	20	25	500	0.11	1410	79	NMRV-P040/063	NRV-P040/063
2398	1.5	20	30	600	0.12	1410	79	NMRV-P040/063	NRV-P040/063
2398	1.2	25	30	750	0.1	1410	79	NMRV-P040/063	NRV-P040/063
2398	1	30	30	900	0.09	1410	79	NMRV-P040/063	NRV-P040/063
2398	0.7	40	30	1200	0.07	1410	79	NMRV-P040/063	NRV-P040/063
2398	0.6	50	30	1500	0.06	1410	79	NMRV-P040/063	NRV-P040/063

Maximum Torque lbs*in	Output Speed RPM	Ratio Stage 1	Ratio Stage 2	Total Ratio i	Maximum Power HP	OHL		Gear Reducer	
						Output Shaft lbs	Input Shaft lbs	Motorized Input	Shaft Input
2398	0.5	60	30	1800	0.06	1410	79	NMRV-P040/063	NRV-P040/063
2259	0.4	60	40	2400	0.04	1410	79	NMRV-P040/063	NRV-P040/063
2089	0.3	60	50	3000	0.03	1410	79	NMRV-P040/063	NRV-P040/063
2089	0.2	80	50	4000	0.03	1410	79	NMRV-P040/063	NRV-P040/063
2089	0.2	100	50	5000	0.03	1410	79	NMRV-P040/063	NRV-P040/063
3401	8.8	10	10	100	0.71	1318	79	NMRV-P040/075	NRV-P040/075
3761	5.8	10	15	150	0.55	1509	79	NMRV-P040/075	NRV-P040/075
3715	4.4	10	20	200	0.43	1659	79	NMRV-P040/075	NRV-P040/075
3359	3.5	10	25	250	0.33	1659	79	NMRV-P040/075	NRV-P040/075
3929	2.9	10	30	300	0.34	1659	79	NMRV-P040/075	NRV-P040/075
3664	2.2	10	40	400	0.26	1659	79	NMRV-P040/075	NRV-P040/075
3257	1.8	10	50	500	0.2	1659	79	NMRV-P040/075	NRV-P040/075
3929	1.5	20	30	600	0.19	1659	79	NMRV-P040/075	NRV-P040/075
3929	1.2	25	30	750	0.16	1659	79	NMRV-P040/075	NRV-P040/075
3929	1	30	30	900	0.14	1659	79	NMRV-P040/075	NRV-P040/075
3929	0.7	40	30	1200	0.11	1659	79	NMRV-P040/075	NRV-P040/075
3929	0.6	50	30	1500	0.1	1659	79	NMRV-P040/075	NRV-P040/075
3929	0.5	60	30	1800	0.09	1659	79	NMRV-P040/075	NRV-P040/075
3664	0.4	60	40	2400	0.07	1659	79	NMRV-P040/075	NRV-P040/075
3257	0.3	60	50	3000	0.05	1659	79	NMRV-P040/075	NRV-P040/075
3257	0.2	80	50	4000	0.04	1659	79	NMRV-P040/075	NRV-P040/075
3257	0.2	100	50	5000	0.04	1659	79	NMRV-P040/075	NRV-P040/075
3486	8.8	10	10	100	0.71	1458	79	NMRV-P040/090	NRV-P040/090
4974	5.8	10	15	150	0.71	1669	79	NMRV-P040/090	NRV-P040/090
5399	4.4	10	20	200	0.6	1838	79	NMRV-P040/090	NRV-P040/090
5045	3.5	10	25	250	0.47	1839	79	NMRV-P040/090	NRV-P040/090
6196	2.9	10	30	300	0.52	1839	79	NMRV-P040/090	NRV-P040/090
5399	2.2	10	40	400	0.36	1839	79	NMRV-P040/090	NRV-P040/090
4956	1.8	10	50	500	0.29	1839	79	NMRV-P040/090	NRV-P040/090
6196	1.5	20	30	600	0.28	1839	79	NMRV-P040/090	NRV-P040/090
6196	1.2	25	30	750	0.23	1839	79	NMRV-P040/090	NRV-P040/090
6196	1	30	30	900	0.21	1839	79	NMRV-P040/090	NRV-P040/090
6196	0.7	40	30	1200	0.17	1839	79	NMRV-P040/090	NRV-P040/090
6196	0.6	50	30	1500	0.15	1839	79	NMRV-P040/090	NRV-P040/090
6196	0.5	60	30	1800	0.13	1839	79	NMRV-P040/090	NRV-P040/090
5399	0.4	60	40	2400	0.09	1839	79	NMRV-P040/090	NRV-P040/090
4956	0.3	60	50	3000	0.07	1839	79	NMRV-P040/090	NRV-P040/090
4956	0.2	80	50	4000	0.06	1839	79	NMRV-P040/090	NRV-P040/090
4956	0.2	100	50	5000	0.05	1839	79	NMRV-P040/090	NRV-P040/090
5222	8.8	10	10	100	1.04	1458	110	NMRV-P050/090	NRV-P050/090
5841	5.8	10	15	150	0.82	1669	110	NMRV-P050/090	NRV-P050/090
5399	4.4	10	20	200	0.59	1838	110	NMRV-P050/090	NRV-P050/090
5045	3.5	10	25	250	0.46	1839	110	NMRV-P050/090	NRV-P050/090
6196	2.9	10	30	300	0.5	1839	110	NMRV-P050/090	NRV-P050/090
5399	2.2	10	40	400	0.36	1839	110	NMRV-P050/090	NRV-P050/090
5045	1.8	20	25	500	0.25	1839	110	NMRV-P050/090	NRV-P050/090
6196	1.5	20	30	600	0.28	1839	110	NMRV-P050/090	NRV-P050/090
6196	1.2	25	30	750	0.23	1839	110	NMRV-P050/090	NRV-P050/090
6196	1	30	30	900	0.21	1839	110	NMRV-P050/090	NRV-P050/090
6196	0.7	40	30	1200	0.17	1839	110	NMRV-P050/090	NRV-P050/090
6196	0.6	50	30	1500	0.14	1839	110	NMRV-P050/090	NRV-P050/090
6196	0.5	60	30	1800	0.13	1839	110	NMRV-P050/090	NRV-P050/090
5399	0.4	60	40	2400	0.09	1839	110	NMRV-P050/090	NRV-P050/090
4956	0.3	60	50	3000	0.07	1839	110	NMRV-P050/090	NRV-P050/090
4956	0.2	80	50	4000	0.06	1839	110	NMRV-P050/090	NRV-P050/090
4956	0.2	100	50	5000	0.05	1839	110	NMRV-P050/090	NRV-P050/090
6677	8.8	10	10	100	1.33	1843	110	NMRV-P050/110	NRV-P050/110
9649	5.8	10	15	150	1.33	2110	110	NMRV-P050/110	NRV-P050/110

Maximum Torque lbs*in	Output Speed RPM	Ratio Stage 1	Ratio Stage 2	Total Ratio i	Maximum Power HP	OHL		Gear Reducer	
						Output Shaft lbs	Input Shaft lbs	Motorized Input	Shaft Input
10081	4.4	10	20	200	1.07	2320	110	NMRV-P050/110	NRV-P050/110
10382	3.5	10	25	250	0.9	2320	110	NMRV-P050/110	NRV-P050/110
11196	2.9	10	30	300	0.91	2320	110	NMRV-P050/110	NRV-P050/110
10488	2.2	10	40	400	0.66	2320	110	NMRV-P050/110	NRV-P050/110
10382	1.8	20	25	500	0.5	2320	110	NMRV-P050/110	NRV-P050/110
11196	1.5	20	30	600	0.5	2320	110	NMRV-P050/110	NRV-P050/110
11196	1.2	25	30	750	0.42	2320	110	NMRV-P050/110	NRV-P050/110
11196	1	30	30	900	0.37	2320	110	NMRV-P050/110	NRV-P050/110
11196	0.7	40	30	1200	0.3	2320	110	NMRV-P050/110	NRV-P050/110
11196	0.6	50	30	1500	0.26	2320	110	NMRV-P050/110	NRV-P050/110
11196	0.5	60	30	1800	0.23	2320	110	NMRV-P050/110	NRV-P050/110
10488	0.4	60	40	2400	0.17	2320	110	NMRV-P050/110	NRV-P050/110
9736	0.3	60	50	3000	0.13	2320	110	NMRV-P050/110	NRV-P050/110
9736	0.2	80	50	4000	0.11	2320	110	NMRV-P050/110	NRV-P050/110
9736	0.2	100	50	5000	0.1	2320	110	NMRV-P050/110	NRV-P050/110
9975	8.8	10	10	100	1.99	1843	157	NMRV-P063/110	NRV-P063/110
10585	5.8	10	15	150	1.46	2110	157	NMRV-P063/110	NRV-P063/110
10081	4.4	10	20	200	1.07	2320	157	NMRV-P063/110	NRV-P063/110
10382	3.5	10	25	250	0.9	2320	157	NMRV-P063/110	NRV-P063/110
11196	2.9	10	30	300	0.91	2320	157	NMRV-P063/110	NRV-P063/110
10488	2.2	10	40	400	0.66	2320	157	NMRV-P063/110	NRV-P063/110
10382	1.8	20	25	500	0.49	2320	157	NMRV-P063/110	NRV-P063/110
11196	1.5	20	30	600	0.5	2320	157	NMRV-P063/110	NRV-P063/110
11196	1.2	25	30	750	0.41	2320	157	NMRV-P063/110	NRV-P063/110
11196	1	30	30	900	0.36	2320	157	NMRV-P063/110	NRV-P063/110
11196	0.7	40	30	1200	0.29	2320	157	NMRV-P063/110	NRV-P063/110
11196	0.6	50	30	1500	0.25	2320	157	NMRV-P063/110	NRV-P063/110
11196	0.5	60	30	1800	0.22	2320	157	NMRV-P063/110	NRV-P063/110
10488	0.4	60	40	2400	0.16	2320	157	NMRV-P063/110	NRV-P063/110
9736	0.3	60	50	3000	0.12	2320	157	NMRV-P063/110	NRV-P063/110
9736	0.2	80	50	4000	0.1	2320	157	NMRV-P063/110	NRV-P063/110
9736	0.2	100	50	5000	0.09	2320	157	NMRV-P063/110	NRV-P063/110
11242	8.8	10	10	100	2.21	2410	157	NMRV-P063/130	NRV-P063/130
15046	5.8	10	15	150	2.1	2759	157	NMRV-P063/130	NRV-P063/130
14161	4.4	10	20	200	1.5	3035	157	NMRV-P063/130	NRV-P063/130
13542	3.5	10	25	250	1.18	3035	157	NMRV-P063/130	NRV-P063/130
15577	2.9	10	30	300	1.25	3035	157	NMRV-P063/130	NRV-P063/130
14604	2.2	10	40	400	0.92	3035	157	NMRV-P063/130	NRV-P063/130
13719	1.8	10	50	500	0.72	3035	157	NMRV-P063/130	NRV-P063/130
15577	1.5	20	30	600	0.68	3035	157	NMRV-P063/130	NRV-P063/130
15577	1.2	25	30	750	0.56	3035	157	NMRV-P063/130	NRV-P063/130
15577	1	30	30	900	0.5	3035	157	NMRV-P063/130	NRV-P063/130
15577	0.7	40	30	1200	0.4	3035	157	NMRV-P063/130	NRV-P063/130
15577	0.6	50	30	1500	0.34	3035	157	NMRV-P063/130	NRV-P063/130
15577	0.5	60	30	1800	0.3	3035	157	NMRV-P063/130	NRV-P063/130
14604	0.4	60	40	2400	0.22	3035	157	NMRV-P063/130	NRV-P063/130
13719	0.3	60	50	3000	0.17	3035	157	NMRV-P063/130	NRV-P063/130
13719	0.2	80	50	4000	0.14	3035	157	NMRV-P063/130	NRV-P063/130
13719	0.2	100	50	5000	0.13	3035	157	NMRV-P063/130	NRV-P063/130
20581	5.8	7.5	20	150	2.81	4047	157	NMRV-P063/150	NRV-P063/150
20711	4.4	10	20	200	2.2	4047	157	NMRV-P063/150	NRV-P063/150
18144	3.5	10	25	250	1.58	4047	157	NMRV-P063/150	NRV-P063/150
20711	2.9	15	20	300	1.52	4047	157	NMRV-P063/150	NRV-P063/150
23631	2.2	10	40	400	1.46	4047	157	NMRV-P063/150	NRV-P063/150
20622	1.8	10	50	500	1.09	4047	157	NMRV-P063/150	NRV-P063/150
23631	1.5	15	40	600	1.01	4047	157	NMRV-P063/150	NRV-P063/150
20622	1.2	15	50	750	0.75	4047	157	NMRV-P063/150	NRV-P063/150
18587	1	30	30	900	0.55	4047	157	NMRV-P063/150	NRV-P063/150

Maximum Torque **lbs*in**	Output Speed **RPM**	Ratio **Stage 1**	Ratio **Stage 2**	Total Ratio **i**	Maximum Power **HP**	OHL		Gear Reducer	
						Output Shaft **lbs**	Input Shaft **lbs**	**Motorized Input**	**Shaft Input**
23631	0.7	30	40	1200	0.58	**4047**	**157**	**NMRV-P063/150**	**NRV-P063/150**
20622	0.6	30	50	1500	0.43	**4047**	**157**	**NMRV-P063/150**	**NRV-P063/150**
18587	0.5	60	30	1800	0.33	**4047**	**157**	**NMRV-P063/150**	**NRV-P063/150**
23631	0.4	60	40	2400	0.35	**4047**	**157**	**NMRV-P063/150**	**NRV-P063/150**
20622	0.3	60	50	3000	0.26	**4047**	**157**	**NMRV-P063/150**	**NRV-P063/150**
20622	0.2	80	50	4000	0.22	**4047**	**157**	**NMRV-P063/150**	**NRV-P063/150**
20622	0.2	100	50	5000	0.19	**4047**	**157**	**NMRV-P063/150**	**NRV-P063/150**

Double Worm Gear Reducer Ratings - Input Speed 1140 rpm

Maximum Torque lbs*in	Output Speed RPM	Ratio Stage 1	Ratio Stage 2	Total Ratio i	Maximum Power HP	OHL		Gear Reducer	
						Output Shaft lbs	Input Shaft lbs	Motorized Input	Shaft Input
283	11	10	10	100	0.08	323	-	NMRV025/030	-
248	7.6	7.5	20	150	0.06	407	-	NMRV025/030	-
248	5.7	10	20	200	0.04	407	-	NMRV025/030	-
301	4.6	10	25	250	0.05	411	-	NMRV025/030	-
274	3.8	10	30	300	0.04	411	-	NMRV025/030	-
248	2.9	20	20	400	0.02	407	-	NMRV025/030	-
301	2.3	20	25	500	0.03	411	-	NMRV025/030	-
274	1.9	20	30	600	0.02	411	-	NMRV025/030	-
301	1.5	30	25	750	0.02	411	-	NMRV025/030	-
204	1.3	15	60	900	0.013	411	-	NMRV025/030	-
248	1	30	40	1200	0.012	411	-	NMRV025/030	-
230	0.8	30	50	1500	0.01	411	-	NMRV025/030	-
274	0.6	60	30	1800	0.01	411	-	NMRV025/030	-
248	0.5	60	40	2400	0.007	411	-	NMRV025/030	-
230	0.4	60	50	3000	0.006	411	-	NMRV025/030	-
177	0.3	50	80	4000	0.004	411	-	NMRV025/030	-
628	11	10	10	100	0.18	622	-	NMRV025/040	-
575	7.6	7.5	20	150	0.12	784	-	NMRV025/040	-
575	5.7	10	20	200	0.09	784	-	NMRV025/040	-
540	4.6	10	25	250	0.07	785	-	NMRV025/040	-
646	3.8	10	30	300	0.08	785	-	NMRV025/040	-
575	2.9	20	20	400	0.05	784	-	NMRV025/040	-
540	2.3	20	25	500	0.04	785	-	NMRV025/040	-
646	1.9	20	30	600	0.04	785	-	NMRV025/040	-
540	1.5	30	25	750	0.03	785	-	NMRV025/040	-
646	1.3	30	30	900	0.03	785	-	NMRV025/040	-
575	1	30	40	1200	0.02	785	-	NMRV025/040	-
531	0.8	30	50	1500	0.02	785	-	NMRV025/040	-
646	0.6	60	30	1800	0.02	785	-	NMRV025/040	-
575	0.5	60	40	2400	0.02	785	-	NMRV025/040	-
531	0.4	60	50	3000	0.012	785	-	NMRV025/040	-
425	0.3	50	80	4000	0.008	785	-	NMRV025/040	-
381	0.2	50	100	5000	0.007	785	-	NMRV025/040	-
628	11	10	10	100	0.18	622	44	NMRV030/040	NRV030/040
637	7.6	10	15	150	0.13	713	44	NMRV030/040	NRV030/040
575	5.7	10	20	200	0.09	784	44	NMRV030/040	NRV030/040
540	4.6	10	25	250	0.07	785	44	NMRV030/040	NRV030/040
646	3.8	10	30	300	0.08	785	44	NMRV030/040	NRV030/040
575	2.9	10	40	400	0.06	785	44	NMRV030/040	NRV030/040
540	2.3	20	25	500	0.04	785	47	NMRV030/040	NRV030/040
646	1.9	20	30	600	0.05	785	47	NMRV030/040	NRV030/040
646	1.5	25	30	750	0.04	785	47	NMRV030/040	NRV030/040
646	1.3	30	30	900	0.03	785	47	NMRV030/040	NRV030/040
646	1	40	30	1200	0.03	785	47	NMRV030/040	NRV030/040
646	0.8	50	30	1500	0.02	785	47	NMRV030/040	NRV030/040
646	0.6	60	30	1800	0.02	785	47	NMRV030/040	NRV030/040
575	0.5	60	40	2400	0.02	785	47	NMRV030/040	NRV030/040
531	0.4	60	50	3000	0.013	785	47	NMRV030/040	NRV030/040
425	0.3	50	80	4000	0.009	785	47	NMRV030/040	NRV030/040
381	0.2	50	100	5000	0.007	785	47	NMRV030/040	NRV030/040
1213	11	10	10	100	0.34	854	44	NMRV030/050	NRV030/050
1195	7.6	10	15	150	0.24	978	44	NMRV030/050	NRV030/050
1062	5.7	10	20	200	0.17	1076	44	NMRV030/050	NRV030/050
974	4.6	10	25	250	0.13	1088	44	NMRV030/050	NRV030/050
1283	3.8	10	30	300	0.16	1088	44	NMRV030/050	NRV030/050

Maximum Torque lbs*in	Output Speed RPM	Ratio Stage 1	Ratio Stage 2	Total Ratio i	Maximum Power HP	OHL		Gear Reducer	
						Output Shaft lbs	Input Shaft lbs	Motorized Input	Shaft Input
1097	2.9	10	40	400	0.11	1088	44	NMRV030/050	NRV030/050
1062	2.3	10	50	500	0.09	1088	44	NMRV030/050	NRV030/050
1283	1.9	20	30	600	0.09	1088	47	NMRV030/050	NRV030/050
1283	1.5	25	30	750	0.08	1088	47	NMRV030/050	NRV030/050
1283	1.3	30	30	900	0.07	1088	47	NMRV030/050	NRV030/050
1283	1	40	30	1200	0.06	1088	47	NMRV030/050	NRV030/050
1283	0.8	50	30	1500	0.05	1088	47	NMRV030/050	NRV030/050
1283	0.6	60	30	1800	0.04	1088	47	NMRV030/050	NRV030/050
1097	0.5	60	40	2400	0.03	1088	47	NMRV030/050	NRV030/050
1062	0.4	60	50	3000	0.03	1088	47	NMRV030/050	NRV030/050
726	0.3	50	80	4000	0.02	1088	47	NMRV030/050	NRV030/050
699	0.2	50	100	5000	0.013	1088	47	NMRV030/050	NRV030/050
1213	11	10	10	100	0.33	854	79	NMRV040/050	NRV040/050
1195	7.6	10	15	150	0.23	978	79	NMRV040/050	NRV040/050
1062	5.7	10	20	200	0.17	1076	79	NMRV040/050	NRV040/050
974	4.6	10	25	250	0.13	1088	79	NMRV040/050	NRV040/050
1283	3.8	10	30	300	0.15	1088	79	NMRV040/050	NRV040/050
1097	2.9	10	40	400	0.11	1088	79	NMRV040/050	NRV040/050
1213	2.3	50	10	500	0.09	854	79	NMRV040/050	NRV040/050
1283	1.9	20	30	600	0.08	1088	79	NMRV040/050	NRV040/050
1283	1.5	25	30	750	0.07	1088	79	NMRV040/050	NRV040/050
1195	1.3	60	15	900	0.06	978	79	NMRV040/050	NRV040/050
1283	1	40	30	1200	0.05	1088	79	NMRV040/050	NRV040/050
1283	0.8	50	30	1500	0.04	1088	79	NMRV040/050	NRV040/050
1283	0.6	60	30	1800	0.04	1088	79	NMRV040/050	NRV040/050
1097	0.5	60	40	2400	0.03	1088	79	NMRV040/050	NRV040/050
1062	0.4	60	50	3000	0.02	1088	79	NMRV040/050	NRV040/050
1062	0.3	80	50	4000	0.02	1088	79	NMRV040/050	NRV040/050
1062	0.2	100	50	5000	0.02	1088	79	NMRV040/050	NRV040/050
1399	11	10	10	100	0.39	1117	44	NMRV-P030/063	NRV-P030/063
1965	7.6	10	15	150	0.39	1278	44	NMRV-P030/063	NRV-P030/063
2239	5.7	10	20	200	0.35	1407	44	NMRV-P030/063	NRV-P030/063
2045	4.6	10	25	250	0.27	1410	44	NMRV-P030/063	NRV-P030/063
2259	3.8	7.5	40	300	0.29	1410	39	NMRV-P030/063	NRV-P030/063
2259	2.9	10	40	400	0.22	1410	44	NMRV-P030/063	NRV-P030/063
2089	2.3	10	50	500	0.18	1410	44	NMRV-P030/063	NRV-P030/063
2398	1.9	20	30	600	0.16	1410	47	NMRV-P030/063	NRV-P030/063
2398	1.5	25	30	750	0.14	1410	47	NMRV-P030/063	NRV-P030/063
2398	1.3	30	30	900	0.12	1410	47	NMRV-P030/063	NRV-P030/063
2398	1	40	30	1200	0.1	1410	47	NMRV-P030/063	NRV-P030/063
2398	0.8	50	30	1500	0.09	1410	47	NMRV-P030/063	NRV-P030/063
2398	0.6	60	30	1800	0.08	1410	47	NMRV-P030/063	NRV-P030/063
2259	0.5	60	40	2400	0.06	1410	47	NMRV-P030/063	NRV-P030/063
2089	0.4	60	50	3000	0.05	1410	47	NMRV-P030/063	NRV-P030/063
2089	0.3	80	50	4000	0.04	1410	47	NMRV-P030/063	NRV-P030/063
1328	0.2	50	100	5000	0.02	1410	47	NMRV-P030/063	NRV-P030/063
2277	11	10	10	100	0.62	1117	79	NMRV-P040/063	NRV-P040/063
2300	7.6	10	15	150	0.45	1278	79	NMRV-P040/063	NRV-P040/063
2239	5.7	10	20	200	0.34	1407	79	NMRV-P040/063	NRV-P040/063
2045	4.6	10	25	250	0.26	1410	79	NMRV-P040/063	NRV-P040/063
2398	3.8	10	30	300	0.28	1410	79	NMRV-P040/063	NRV-P040/063
2259	2.9	10	40	400	0.22	1410	79	NMRV-P040/063	NRV-P040/063
2045	2.3	20	25	500	0.14	1410	79	NMRV-P040/063	NRV-P040/063
2398	1.9	20	30	600	0.15	1410	79	NMRV-P040/063	NRV-P040/063
2398	1.5	25	30	750	0.13	1410	79	NMRV-P040/063	NRV-P040/063
2398	1.3	30	30	900	0.11	1410	79	NMRV-P040/063	NRV-P040/063
2398	1	40	30	1200	0.09	1410	79	NMRV-P040/063	NRV-P040/063
2398	0.8	50	30	1500	0.08	1410	79	NMRV-P040/063	NRV-P040/063

Maximum Torque lbs*in	Output Speed RPM	Ratio Stage 1	Ratio Stage 2	Total Ratio i	Maximum Power HP	OHL		Gear Reducer	
						Output Shaft lbs	Input Shaft lbs	Motorized Input	Shaft Input
2398	0.6	60	30	1800	0.07	1410	79	NMRV-P040/063	NRV-P040/063
2259	0.5	60	40	2400	0.05	1410	79	NMRV-P040/063	NRV-P040/063
2089	0.4	60	50	3000	0.04	1410	79	NMRV-P040/063	NRV-P040/063
2089	0.3	80	50	4000	0.04	1410	79	NMRV-P040/063	NRV-P040/063
2089	0.2	100	50	5000	0.03	1410	79	NMRV-P040/063	NRV-P040/063
3257	11	10	10	100	0.88	1318	79	NMRV-P040/075	NRV-P040/075
3761	7.6	10	15	150	0.71	1509	79	NMRV-P040/075	NRV-P040/075
3715	5.7	10	20	200	0.56	1659	79	NMRV-P040/075	NRV-P040/075
3359	4.6	10	25	250	0.42	1659	79	NMRV-P040/075	NRV-P040/075
3929	3.8	10	30	300	0.44	1659	79	NMRV-P040/075	NRV-P040/075
3664	2.9	10	40	400	0.33	1659	79	NMRV-P040/075	NRV-P040/075
3257	2.3	10	50	500	0.26	1659	79	NMRV-P040/075	NRV-P040/075
3929	1.9	20	30	600	0.24	1659	79	NMRV-P040/075	NRV-P040/075
3929	1.5	25	30	750	0.2	1659	79	NMRV-P040/075	NRV-P040/075
3929	1.3	30	30	900	0.18	1659	79	NMRV-P040/075	NRV-P040/075
3929	1	40	30	1200	0.14	1659	79	NMRV-P040/075	NRV-P040/075
3929	0.8	50	30	1500	0.12	1659	79	NMRV-P040/075	NRV-P040/075
3929	0.6	60	30	1800	0.11	1659	79	NMRV-P040/075	NRV-P040/075
3664	0.5	60	40	2400	0.08	1659	79	NMRV-P040/075	NRV-P040/075
3257	0.4	60	50	3000	0.06	1659	79	NMRV-P040/075	NRV-P040/075
3257	0.3	80	50	4000	0.05	1659	79	NMRV-P040/075	NRV-P040/075
3257	0.2	100	50	5000	0.05	1659	79	NMRV-P040/075	NRV-P040/075
3339	11	10	10	100	0.88	1458	79	NMRV-P040/090	NRV-P040/090
4763	7.6	10	15	150	0.88	1669	79	NMRV-P040/090	NRV-P040/090
5399	5.7	10	20	200	0.77	1838	79	NMRV-P040/090	NRV-P040/090
5045	4.6	10	25	250	0.6	1839	79	NMRV-P040/090	NRV-P040/090
6196	3.8	10	30	300	0.66	1839	79	NMRV-P040/090	NRV-P040/090
5399	2.9	10	40	400	0.47	1839	79	NMRV-P040/090	NRV-P040/090
4956	2.3	10	50	500	0.37	1839	79	NMRV-P040/090	NRV-P040/090
6196	1.9	20	30	600	0.36	1839	79	NMRV-P040/090	NRV-P040/090
6196	1.5	25	30	750	0.3	1839	79	NMRV-P040/090	NRV-P040/090
6196	1.3	30	30	900	0.27	1839	79	NMRV-P040/090	NRV-P040/090
6196	1	40	30	1200	0.21	1839	79	NMRV-P040/090	NRV-P040/090
6196	0.8	50	30	1500	0.18	1839	79	NMRV-P040/090	NRV-P040/090
6196	0.6	60	30	1800	0.16	1839	79	NMRV-P040/090	NRV-P040/090
5399	0.5	60	40	2400	0.12	1839	79	NMRV-P040/090	NRV-P040/090
4956	0.4	60	50	3000	0.09	1839	79	NMRV-P040/090	NRV-P040/090
4956	0.3	80	50	4000	0.08	1839	79	NMRV-P040/090	NRV-P040/090
4956	0.2	100	50	5000	0.07	1839	79	NMRV-P040/090	NRV-P040/090
5222	11	10	10	100	1.34	1458	110	NMRV-P050/090	NRV-P050/090
5841	7.6	10	15	150	1.05	1669	110	NMRV-P050/090	NRV-P050/090
5399	5.7	10	20	200	0.76	1838	110	NMRV-P050/090	NRV-P050/090
5045	4.6	10	25	250	0.59	1839	110	NMRV-P050/090	NRV-P050/090
6196	3.8	10	30	300	0.65	1839	110	NMRV-P050/090	NRV-P050/090
5399	2.9	10	40	400	0.46	1839	110	NMRV-P050/090	NRV-P050/090
5045	2.3	20	25	500	0.32	1839	110	NMRV-P050/090	NRV-P050/090
6196	1.9	20	30	600	0.35	1839	110	NMRV-P050/090	NRV-P050/090
6196	1.5	25	30	750	0.29	1839	110	NMRV-P050/090	NRV-P050/090
6196	1.3	30	30	900	0.26	1839	110	NMRV-P050/090	NRV-P050/090
6196	1	40	30	1200	0.21	1839	110	NMRV-P050/090	NRV-P050/090
6196	0.8	50	30	1500	0.18	1839	110	NMRV-P050/090	NRV-P050/090
6196	0.6	60	30	1800	0.16	1839	110	NMRV-P050/090	NRV-P050/090
5399	0.5	60	40	2400	0.11	1839	110	NMRV-P050/090	NRV-P050/090
4956	0.4	60	50	3000	0.09	1839	110	NMRV-P050/090	NRV-P050/090
4956	0.3	80	50	4000	0.07	1839	110	NMRV-P050/090	NRV-P050/090
4956	0.2	100	50	5000	0.06	1839	110	NMRV-P050/090	NRV-P050/090
6209	11	10	10	100	1.59	1843	110	NMRV-P050/110	NRV-P050/110
8973	7.6	10	15	150	1.59	2110	110	NMRV-P050/110	NRV-P050/110

Maximum Torque lbs*in	Output Speed RPM	Ratio Stage 1	Ratio Stage 2	Total Ratio i	Maximum Power HP	OHL		Gear Reducer	
						Output Shaft lbs	Input Shaft lbs	Motorized Input	Shaft Input
10081	5.7	10	20	200	1.38	2320	110	NMRV-P050/110	NRV-P050/110
10382	4.6	10	25	250	1.16	2320	110	NMRV-P050/110	NRV-P050/110
11196	3.8	10	30	300	1.17	2320	110	NMRV-P050/110	NRV-P050/110
10488	2.9	10	40	400	0.85	2320	110	NMRV-P050/110	NRV-P050/110
10382	2.3	20	25	500	0.63	2320	110	NMRV-P050/110	NRV-P050/110
11196	1.9	20	30	600	0.64	2320	110	NMRV-P050/110	NRV-P050/110
11196	1.5	25	30	750	0.53	2320	110	NMRV-P050/110	NRV-P050/110
11196	1.3	30	30	900	0.47	2320	110	NMRV-P050/110	NRV-P050/110
11196	1	40	30	1200	0.38	2320	110	NMRV-P050/110	NRV-P050/110
11196	0.8	50	30	1500	0.32	2320	110	NMRV-P050/110	NRV-P050/110
11196	0.6	60	30	1800	0.29	2320	110	NMRV-P050/110	NRV-P050/110
10488	0.5	60	40	2400	0.21	2320	110	NMRV-P050/110	NRV-P050/110
9736	0.4	60	50	3000	0.16	2320	110	NMRV-P050/110	NRV-P050/110
9736	0.3	80	50	4000	0.14	2320	110	NMRV-P050/110	NRV-P050/110
9736	0.2	100	50	5000	0.12	2320	110	NMRV-P050/110	NRV-P050/110
9975	11	10	10	100	2.55	1843	150	NMRV-P063/110	NRV-P063/110
10585	7.6	10	15	150	1.87	2110	150	NMRV-P063/110	NRV-P063/110
10081	5.7	10	20	200	1.37	2320	150	NMRV-P063/110	NRV-P063/110
10382	4.6	10	25	250	1.16	2320	150	NMRV-P063/110	NRV-P063/110
11196	3.8	10	30	300	1.17	2320	150	NMRV-P063/110	NRV-P063/110
10488	2.9	10	40	400	0.85	2320	150	NMRV-P063/110	NRV-P063/110
10382	2.3	20	25	500	0.62	2320	157	NMRV-P063/110	NRV-P063/110
11196	1.9	20	30	600	0.63	2320	157	NMRV-P063/110	NRV-P063/110
11196	1.5	25	30	750	0.52	2320	157	NMRV-P063/110	NRV-P063/110
11196	1.3	30	30	900	0.46	2320	157	NMRV-P063/110	NRV-P063/110
11196	1	40	30	1200	0.37	2320	157	NMRV-P063/110	NRV-P063/110
11196	0.8	50	30	1500	0.31	2320	157	NMRV-P063/110	NRV-P063/110
11196	0.6	60	30	1800	0.27	2320	157	NMRV-P063/110	NRV-P063/110
10488	0.5	60	40	2400	0.2	2320	157	NMRV-P063/110	NRV-P063/110
9736	0.4	60	50	3000	0.15	2320	157	NMRV-P063/110	NRV-P063/110
9736	0.3	80	50	4000	0.13	2320	157	NMRV-P063/110	NRV-P063/110
9736	0.2	100	50	5000	0.11	2320	157	NMRV-P063/110	NRV-P063/110
10471	11	10	10	100	2.65	2410	150	NMRV-P063/130	NRV-P063/130
14760	7.6	10	15	150	2.65	2759	150	NMRV-P063/130	NRV-P063/130
14161	5.7	10	20	200	1.93	3035	150	NMRV-P063/130	NRV-P063/130
13542	4.6	10	25	250	1.52	3035	150	NMRV-P063/130	NRV-P063/130
15577	3.8	10	30	300	1.6	3035	150	NMRV-P063/130	NRV-P063/130
14604	2.9	10	40	400	1.18	3035	150	NMRV-P063/130	NRV-P063/130
13719	2.3	10	50	500	0.93	3035	150	NMRV-P063/130	NRV-P063/130
15577	1.9	20	30	600	0.86	3035	157	NMRV-P063/130	NRV-P063/130
15577	1.5	25	30	750	0.71	3035	157	NMRV-P063/130	NRV-P063/130
15577	1.3	30	30	900	0.63	3035	157	NMRV-P063/130	NRV-P063/130
15577	1	40	30	1200	0.5	3035	157	NMRV-P063/130	NRV-P063/130
15577	0.8	50	30	1500	0.42	3035	157	NMRV-P063/130	NRV-P063/130
15577	0.6	60	30	1800	0.37	3035	157	NMRV-P063/130	NRV-P063/130
14604	0.5	60	40	2400	0.28	3035	157	NMRV-P063/130	NRV-P063/130
13719	0.4	60	50	3000	0.22	3035	157	NMRV-P063/130	NRV-P063/130
13719	0.3	80	50	4000	0.18	3035	157	NMRV-P063/130	NRV-P063/130
13719	0.2	100	50	5000	0.16	3035	157	NMRV-P063/130	NRV-P063/130
19009	7.6	7.5	20	150	3.36	4047	130	NMRV-P063/150	NRV-P063/150
19428	5.7	10	20	200	2.65	4047	150	NMRV-P063/150	NRV-P063/150
18144	4.6	10	25	250	2.03	4047	150	NMRV-P063/150	NRV-P063/150
20711	3.8	15	20	300	1.95	4047	157	NMRV-P063/150	NRV-P063/150
23631	2.9	10	40	400	1.88	4047	150	NMRV-P063/150	NRV-P063/150
20622	2.3	10	50	500	1.4	4047	150	NMRV-P063/150	NRV-P063/150
23631	1.9	15	40	600	1.3	4047	157	NMRV-P063/150	NRV-P063/150
20622	1.5	15	50	750	0.96	4047	157	NMRV-P063/150	NRV-P063/150
18587	1.3	30	30	900	0.7	4047	157	NMRV-P063/150	NRV-P063/150

Maximum Torque lbs*in	Output Speed RPM	Ratio Stage 1	Ratio Stage 2	Total Ratio i	Maximum Power HP	OHL		Gear Reducer	
						Output Shaft lbs	Input Shaft lbs	Motorized Input	Shaft Input
23631	1	30	40	1200	0.74	**4047**	**157**	**NMRV-P063/150**	**NRV-P063/150**
20622	0.8	30	50	1500	0.55	**4047**	**157**	**NMRV-P063/150**	**NRV-P063/150**
18587	0.6	60	30	1800	0.42	**4047**	**157**	**NMRV-P063/150**	**NRV-P063/150**
23631	0.5	60	40	2400	0.44	**4047**	**157**	**NMRV-P063/150**	**NRV-P063/150**
20622	0.4	60	50	3000	0.33	**4047**	**157**	**NMRV-P063/150**	**NRV-P063/150**
20622	0.3	80	50	4000	0.27	**4047**	**157**	**NMRV-P063/150**	**NRV-P063/150**
20622	0.2	100	50	5000	0.24	**4047**	**157**	**NMRV-P063/150**	**NRV-P063/150**

Double Worm Gear Reducer Ratings - Input Speed 1750 rpm

Maximum Torque lbs*in	Output Speed RPM	Ratio Stage 1	Ratio Stage 2	Total Ratio i	Maximum Power HP	OHL		Gear Reducer	
						Output Shaft lbs	Input Shaft lbs	Motorized Input	Shaft Input
283	18	10	10	100	0.13	323	-	NMRV025/030	-
248	12	7.5	20	150	0.09	407	-	NMRV025/030	-
248	8.8	10	20	200	0.07	407	-	NMRV025/030	-
301	7	10	25	250	0.07	411	-	NMRV025/030	-
274	5.8	10	30	300	0.06	411	-	NMRV025/030	-
248	4.4	20	20	400	0.04	407	-	NMRV025/030	-
301	3.5	20	25	500	0.04	411	-	NMRV025/030	-
274	2.9	20	30	600	0.03	411	-	NMRV025/030	-
301	2.3	30	25	750	0.03	411	-	NMRV025/030	-
204	1.9	15	60	900	0.02	411	-	NMRV025/030	-
248	1.5	30	40	1200	0.02	411	-	NMRV025/030	-
230	1.2	30	50	1500	0.015	411	-	NMRV025/030	-
274	1	60	30	1800	0.015	411	-	NMRV025/030	-
248	0.7	60	40	2400	0.011	411	-	NMRV025/030	-
230	0.6	60	50	3000	0.009	411	-	NMRV025/030	-
177	0.4	50	80	4000	0.006	411	-	NMRV025/030	-
628	18	10	10	100	0.27	622	-	NMRV025/040	-
575	12	7.5	20	150	0.18	784	-	NMRV025/040	-
575	8.8	10	20	200	0.14	784	-	NMRV025/040	-
540	7	10	25	250	0.11	785	-	NMRV025/040	-
646	5.8	10	30	300	0.12	785	-	NMRV025/040	-
575	4.4	20	20	400	0.08	784	-	NMRV025/040	-
540	3.5	20	25	500	0.06	785	-	NMRV025/040	-
646	2.9	20	30	600	0.07	785	-	NMRV025/040	-
540	2.3	30	25	750	0.05	785	-	NMRV025/040	-
646	1.9	30	30	900	0.05	785	-	NMRV025/040	-
575	1.5	30	40	1200	0.04	785	-	NMRV025/040	-
531	1.2	30	50	1500	0.03	785	-	NMRV025/040	-
646	1	60	30	1800	0.03	785	-	NMRV025/040	-
575	0.7	60	40	2400	0.02	785	-	NMRV025/040	-
531	0.6	60	50	3000	0.02	785	-	NMRV025/040	-
425	0.4	50	80	4000	0.013	785	-	NMRV025/040	-
381	0.4	50	100	5000	0.01	785	-	NMRV025/040	-
628	18	10	10	100	0.27	622	38	NMRV030/040	NRV030/040
637	12	10	15	150	0.19	713	38	NMRV030/040	NRV030/040
575	8.8	10	20	200	0.14	784	38	NMRV030/040	NRV030/040
540	7	10	25	250	0.11	785	38	NMRV030/040	NRV030/040
646	5.8	10	30	300	0.12	785	38	NMRV030/040	NRV030/040
575	4.4	10	40	400	0.09	785	38	NMRV030/040	NRV030/040
540	3.5	20	25	500	0.06	785	40	NMRV030/040	NRV030/040
646	2.9	20	30	600	0.07	785	40	NMRV030/040	NRV030/040
646	2.3	25	30	750	0.06	785	47	NMRV030/040	NRV030/040
646	1.9	30	30	900	0.05	785	47	NMRV030/040	NRV030/040
646	1.5	40	30	1200	0.04	785	47	NMRV030/040	NRV030/040
646	1.2	50	30	1500	0.04	785	47	NMRV030/040	NRV030/040
646	1	60	30	1800	0.03	785	47	NMRV030/040	NRV030/040
575	0.7	60	40	2400	0.02	785	47	NMRV030/040	NRV030/040
531	0.6	60	50	3000	0.02	785	47	NMRV030/040	NRV030/040
425	0.4	50	80	4000	0.013	785	47	NMRV030/040	NRV030/040
381	0.4	50	100	5000	0.011	785	47	NMRV030/040	NRV030/040
1213	18	10	10	100	0.51	854	38	NMRV030/050	NRV030/050
1195	12	10	15	150	0.37	978	38	NMRV030/050	NRV030/050
1062	8.8	10	20	200	0.26	1076	38	NMRV030/050	NRV030/050
974	7	10	25	250	0.2	1088	38	NMRV030/050	NRV030/050
1283	5.8	10	30	300	0.24	1088	38	NMRV030/050	NRV030/050

Maximum Torque lbs*in	Output Speed RPM	Ratio Stage 1	Ratio Stage 2	Total Ratio i	Maximum Power HP	OHL		Gear Reducer	
						Output Shaft lbs	Input Shaft lbs	Motorized Input	Shaft Input
1097	4.4	10	40	400	0.17	1088	38	NMRV030/050	NRV030/050
1062	3.5	10	50	500	0.14	1088	38	NMRV030/050	NRV030/050
1283	2.9	20	30	600	0.13	1088	40	NMRV030/050	NRV030/050
1283	2.3	25	30	750	0.11	1088	47	NMRV030/050	NRV030/050
1283	1.9	30	30	900	0.1	1088	47	NMRV030/050	NRV030/050
1283	1.5	40	30	1200	0.08	1088	47	NMRV030/050	NRV030/050
1283	1.2	50	30	1500	0.07	1088	47	NMRV030/050	NRV030/050
1283	1	60	30	1800	0.06	1088	47	NMRV030/050	NRV030/050
1097	0.7	60	40	2400	0.05	1088	47	NMRV030/050	NRV030/050
1062	0.6	60	50	3000	0.04	1088	47	NMRV030/050	NRV030/050
726	0.4	50	80	4000	0.02	1088	47	NMRV030/050	NRV030/050
699	0.4	50	100	5000	0.02	1088	47	NMRV030/050	NRV030/050
1213	18	10	10	100	0.5	854	77	NMRV040/050	NRV040/050
1195	12	10	15	150	0.36	978	77	NMRV040/050	NRV040/050
1062	8.8	10	20	200	0.25	1076	77	NMRV040/050	NRV040/050
974	7	10	25	250	0.2	1088	77	NMRV040/050	NRV040/050
1283	5.8	10	30	300	0.23	1088	77	NMRV040/050	NRV040/050
1097	4.4	10	40	400	0.17	1088	77	NMRV040/050	NRV040/050
1213	3.5	50	10	500	0.14	854	79	NMRV040/050	NRV040/050
1283	2.9	20	30	600	0.13	1088	79	NMRV040/050	NRV040/050
1283	2.3	25	30	750	0.1	1088	79	NMRV040/050	NRV040/050
1195	1.9	60	15	900	0.09	978	79	NMRV040/050	NRV040/050
1283	1.5	40	30	1200	0.07	1088	79	NMRV040/050	NRV040/050
1283	1.2	50	30	1500	0.06	1088	79	NMRV040/050	NRV040/050
1283	1	60	30	1800	0.06	1088	79	NMRV040/050	NRV040/050
1097	0.7	60	40	2400	0.04	1088	79	NMRV040/050	NRV040/050
1062	0.6	60	50	3000	0.03	1088	79	NMRV040/050	NRV040/050
1062	0.4	80	50	4000	0.03	1088	79	NMRV040/050	NRV040/050
1062	0.4	100	50	5000	0.02	1088	79	NMRV040/050	NRV040/050
1264	18	10	10	100	0.54	1117	38	NMRV-P030/063	NRV-P030/063
1777	12	10	15	150	0.54	1278	38	NMRV-P030/063	NRV-P030/063
2239	8.8	10	20	200	0.54	1407	38	NMRV-P030/063	NRV-P030/063
2045	7	10	25	250	0.41	1410	38	NMRV-P030/063	NRV-P030/063
2259	5.8	7.5	40	300	0.44	1410	34	NMRV-P030/063	NRV-P030/063
2259	4.4	10	40	400	0.34	1410	38	NMRV-P030/063	NRV-P030/063
2089	3.5	10	50	500	0.27	1410	38	NMRV-P030/063	NRV-P030/063
2398	2.9	20	30	600	0.25	1410	40	NMRV-P030/063	NRV-P030/063
2398	2.3	25	30	750	0.21	1410	47	NMRV-P030/063	NRV-P030/063
2398	1.9	30	30	900	0.18	1410	47	NMRV-P030/063	NRV-P030/063
2398	1.5	40	30	1200	0.15	1410	47	NMRV-P030/063	NRV-P030/063
2398	1.2	50	30	1500	0.13	1410	47	NMRV-P030/063	NRV-P030/063
2398	1	60	30	1800	0.12	1410	47	NMRV-P030/063	NRV-P030/063
2259	0.7	60	40	2400	0.09	1410	47	NMRV-P030/063	NRV-P030/063
2089	0.6	60	50	3000	0.07	1410	47	NMRV-P030/063	NRV-P030/063
2089	0.4	80	50	4000	0.06	1410	47	NMRV-P030/063	NRV-P030/063
1328	0.4	50	100	5000	0.04	1410	47	NMRV-P030/063	NRV-P030/063
2277	18	10	10	100	0.94	1117	77	NMRV-P040/063	NRV-P040/063
2300	12	10	15	150	0.68	1278	77	NMRV-P040/063	NRV-P040/063
2239	8.8	10	20	200	0.52	1407	77	NMRV-P040/063	NRV-P040/063
2045	7	10	25	250	0.4	1410	77	NMRV-P040/063	NRV-P040/063
2398	5.8	10	30	300	0.43	1410	77	NMRV-P040/063	NRV-P040/063
2259	4.4	10	40	400	0.33	1410	77	NMRV-P040/063	NRV-P040/063
2045	3.5	20	25	500	0.21	1410	79	NMRV-P040/063	NRV-P040/063
2398	2.9	20	30	600	0.23	1410	79	NMRV-P040/063	NRV-P040/063
2398	2.3	25	30	750	0.19	1410	79	NMRV-P040/063	NRV-P040/063
2398	1.9	30	30	900	0.17	1410	79	NMRV-P040/063	NRV-P040/063
2398	1.5	40	30	1200	0.14	1410	79	NMRV-P040/063	NRV-P040/063
2398	1.2	50	30	1500	0.12	1410	79	NMRV-P040/063	NRV-P040/063

Maximum Torque lbs*in	Output Speed RPM	Ratio Stage 1	Ratio Stage 2	Total Ratio i	Maximum Power HP	OHL		Gear Reducer	
						Output Shaft lbs	Input Shaft lbs	Motorized Input	Shaft Input
2398	1	60	30	1800	0.1	1410	79	NMRV-P040/063	NRV-P040/063
2259	0.7	60	40	2400	0.08	1410	79	NMRV-P040/063	NRV-P040/063
2089	0.6	60	50	3000	0.06	1410	79	NMRV-P040/063	NRV-P040/063
2089	0.4	80	50	4000	0.05	1410	79	NMRV-P040/063	NRV-P040/063
2089	0.4	100	50	5000	0.05	1410	79	NMRV-P040/063	NRV-P040/063
2961	18	10	10	100	1.21	1318	77	NMRV-P040/075	NRV-P040/075
3761	12	10	15	150	1.08	1509	77	NMRV-P040/075	NRV-P040/075
3715	8.8	10	20	200	0.84	1659	77	NMRV-P040/075	NRV-P040/075
3359	7	10	25	250	0.64	1659	77	NMRV-P040/075	NRV-P040/075
3929	5.8	10	30	300	0.67	1659	77	NMRV-P040/075	NRV-P040/075
3664	4.4	10	40	400	0.51	1659	77	NMRV-P040/075	NRV-P040/075
3257	3.5	10	50	500	0.39	1659	77	NMRV-P040/075	NRV-P040/075
3929	2.9	20	30	600	0.36	1659	79	NMRV-P040/075	NRV-P040/075
3929	2.3	25	30	750	0.3	1659	79	NMRV-P040/075	NRV-P040/075
3929	1.9	30	30	900	0.27	1659	79	NMRV-P040/075	NRV-P040/075
3929	1.5	40	30	1200	0.22	1659	79	NMRV-P040/075	NRV-P040/075
3929	1.2	50	30	1500	0.18	1659	79	NMRV-P040/075	NRV-P040/075
3929	1	60	30	1800	0.16	1659	79	NMRV-P040/075	NRV-P040/075
3664	0.7	60	40	2400	0.12	1659	79	NMRV-P040/075	NRV-P040/075
3257	0.6	60	50	3000	0.09	1659	79	NMRV-P040/075	NRV-P040/075
3257	0.4	80	50	4000	0.08	1659	79	NMRV-P040/075	NRV-P040/075
3257	0.4	100	50	5000	0.07	1659	79	NMRV-P040/075	NRV-P040/075
3035	18	10	10	100	1.21	1458	77	NMRV-P040/090	NRV-P040/090
4330	12	10	15	150	1.21	1669	77	NMRV-P040/090	NRV-P040/090
5399	8.8	10	20	200	1.18	1838	77	NMRV-P040/090	NRV-P040/090
5045	7	10	25	250	0.92	1839	77	NMRV-P040/090	NRV-P040/090
6196	5.8	10	30	300	1.01	1839	77	NMRV-P040/090	NRV-P040/090
5399	4.4	10	40	400	0.71	1839	77	NMRV-P040/090	NRV-P040/090
4956	3.5	10	50	500	0.56	1839	77	NMRV-P040/090	NRV-P040/090
6196	2.9	20	30	600	0.54	1839	79	NMRV-P040/090	NRV-P040/090
6196	2.3	25	30	750	0.45	1839	79	NMRV-P040/090	NRV-P040/090
6196	1.9	30	30	900	0.4	1839	79	NMRV-P040/090	NRV-P040/090
6196	1.5	40	30	1200	0.32	1839	79	NMRV-P040/090	NRV-P040/090
6196	1.2	50	30	1500	0.27	1839	79	NMRV-P040/090	NRV-P040/090
6196	1	60	30	1800	0.24	1839	79	NMRV-P040/090	NRV-P040/090
5399	0.7	60	40	2400	0.17	1839	79	NMRV-P040/090	NRV-P040/090
4956	0.6	60	50	3000	0.13	1839	79	NMRV-P040/090	NRV-P040/090
4956	0.4	80	50	4000	0.11	1839	79	NMRV-P040/090	NRV-P040/090
4956	0.4	100	50	5000	0.1	1839	79	NMRV-P040/090	NRV-P040/090
5222	18	10	10	100	2.03	1458	110	NMRV-P050/090	NRV-P050/090
5841	12	10	15	150	1.59	1669	110	NMRV-P050/090	NRV-P050/090
5399	8.8	10	20	200	1.15	1838	110	NMRV-P050/090	NRV-P050/090
5045	7	10	25	250	0.89	1839	110	NMRV-P050/090	NRV-P050/090
6196	5.8	10	30	300	0.98	1839	110	NMRV-P050/090	NRV-P050/090
5399	4.4	10	40	400	0.69	1839	110	NMRV-P050/090	NRV-P050/090
5045	3.5	20	25	500	0.49	1839	110	NMRV-P050/090	NRV-P050/090
6196	2.9	20	30	600	0.53	1839	110	NMRV-P050/090	NRV-P050/090
6196	2.3	25	30	750	0.44	1839	110	NMRV-P050/090	NRV-P050/090
6196	1.9	30	30	900	0.39	1839	110	NMRV-P050/090	NRV-P050/090
6196	1.5	40	30	1200	0.31	1839	110	NMRV-P050/090	NRV-P050/090
6196	1.2	50	30	1500	0.27	1839	110	NMRV-P050/090	NRV-P050/090
6196	1	60	30	1800	0.24	1839	110	NMRV-P050/090	NRV-P050/090
5399	0.7	60	40	2400	0.17	1839	110	NMRV-P050/090	NRV-P050/090
4956	0.6	60	50	3000	0.13	1839	110	NMRV-P050/090	NRV-P050/090
4956	0.4	80	50	4000	0.11	1839	110	NMRV-P050/090	NRV-P050/090
4956	0.4	100	50	5000	0.09	1839	110	NMRV-P050/090	NRV-P050/090
5446	18	10	10	100	2.12	1843	110	NMRV-P050/110	NRV-P050/110
7871	12	10	15	150	2.12	2110	110	NMRV-P050/110	NRV-P050/110

Maximum Torque lbs*in	Output Speed RPM	Ratio Stage 1	Ratio Stage 2	Total Ratio i	Maximum Power HP	OHL		Gear Reducer	
						Output Shaft lbs	Input Shaft lbs	Motorized Input	Shaft Input
10081	8.8	10	20	200	2.09	2320	110	NMRV-P050/110	NRV-P050/110
10382	7	10	25	250	1.77	2320	110	NMRV-P050/110	NRV-P050/110
11196	5.8	10	30	300	1.78	2320	110	NMRV-P050/110	NRV-P050/110
10488	4.4	10	40	400	1.29	2320	110	NMRV-P050/110	NRV-P050/110
10382	3.5	20	25	500	0.96	2320	110	NMRV-P050/110	NRV-P050/110
11196	2.9	20	30	600	0.97	2320	110	NMRV-P050/110	NRV-P050/110
11196	2.3	25	30	750	0.8	2320	110	NMRV-P050/110	NRV-P050/110
11196	1.9	30	30	900	0.71	2320	110	NMRV-P050/110	NRV-P050/110
11196	1.5	40	30	1200	0.57	2320	110	NMRV-P050/110	NRV-P050/110
11196	1.2	50	30	1500	0.48	2320	110	NMRV-P050/110	NRV-P050/110
11196	1	60	30	1800	0.43	2320	110	NMRV-P050/110	NRV-P050/110
10488	0.7	60	40	2400	0.31	2320	110	NMRV-P050/110	NRV-P050/110
9736	0.6	60	50	3000	0.24	2320	110	NMRV-P050/110	NRV-P050/110
9736	0.4	80	50	4000	0.2	2320	110	NMRV-P050/110	NRV-P050/110
9736	0.4	100	50	5000	0.17	2320	110	NMRV-P050/110	NRV-P050/110
9090	18	10	10	100	3.52	1843	130	NMRV-P063/110	NRV-P063/110
10585	12	10	15	150	2.84	2110	130	NMRV-P063/110	NRV-P063/110
10081	8.8	10	20	200	2.08	2320	130	NMRV-P063/110	NRV-P063/110
10382	7	10	25	250	1.76	2320	130	NMRV-P063/110	NRV-P063/110
11196	5.8	10	30	300	1.77	2320	130	NMRV-P063/110	NRV-P063/110
10488	4.4	10	40	400	1.28	2320	130	NMRV-P063/110	NRV-P063/110
10382	3.5	20	25	500	0.93	2320	157	NMRV-P063/110	NRV-P063/110
11196	2.9	20	30	600	0.94	2320	157	NMRV-P063/110	NRV-P063/110
11196	2.3	25	30	750	0.77	2320	157	NMRV-P063/110	NRV-P063/110
11196	1.9	30	30	900	0.68	2320	157	NMRV-P063/110	NRV-P063/110
11196	1.5	40	30	1200	0.54	2320	157	NMRV-P063/110	NRV-P063/110
11196	1.2	50	30	1500	0.45	2320	157	NMRV-P063/110	NRV-P063/110
11196	1	60	30	1800	0.4	2320	157	NMRV-P063/110	NRV-P063/110
10488	0.7	60	40	2400	0.29	2320	157	NMRV-P063/110	NRV-P063/110
9736	0.6	60	50	3000	0.23	2320	157	NMRV-P063/110	NRV-P063/110
9736	0.4	80	50	4000	0.18	2320	157	NMRV-P063/110	NRV-P063/110
9736	0.4	100	50	5000	0.16	2320	157	NMRV-P063/110	NRV-P063/110
9201	18	10	10	100	3.52	2410	130	NMRV-P063/130	NRV-P063/130
12969	12	10	15	150	3.52	2759	130	NMRV-P063/130	NRV-P063/130
14161	8.8	10	20	200	2.92	3035	130	NMRV-P063/130	NRV-P063/130
13542	7	10	25	250	2.29	3035	130	NMRV-P063/130	NRV-P063/130
15577	5.8	10	30	300	2.42	3035	130	NMRV-P063/130	NRV-P063/130
14604	4.4	10	40	400	1.78	3035	130	NMRV-P063/130	NRV-P063/130
13719	3.5	10	50	500	1.41	3035	130	NMRV-P063/130	NRV-P063/130
15577	2.9	20	30	600	1.28	3035	157	NMRV-P063/130	NRV-P063/130
15577	2.3	25	30	750	1.06	3035	157	NMRV-P063/130	NRV-P063/130
15577	1.9	30	30	900	0.93	3035	157	NMRV-P063/130	NRV-P063/130
15577	1.5	40	30	1200	0.74	3035	157	NMRV-P063/130	NRV-P063/130
15577	1.2	50	30	1500	0.62	3035	157	NMRV-P063/130	NRV-P063/130
15577	1	60	30	1800	0.55	3035	157	NMRV-P063/130	NRV-P063/130
14604	0.7	60	40	2400	0.4	3035	157	NMRV-P063/130	NRV-P063/130
13719	0.6	60	50	3000	0.32	3035	157	NMRV-P063/130	NRV-P063/130
13719	0.4	80	50	4000	0.26	3035	157	NMRV-P063/130	NRV-P063/130
13719	0.4	100	50	5000	0.23	3035	157	NMRV-P063/130	NRV-P063/130
16575	12	7.5	20	150	4.46	4047	112	NMRV-P063/150	NRV-P063/150
17071	8.8	10	20	200	3.52	4047	130	NMRV-P063/150	NRV-P063/150
18144	7	10	25	250	3.07	4047	130	NMRV-P063/150	NRV-P063/150
19038	5.8	15	20	300	2.7	4047	145	NMRV-P063/150	NRV-P063/150
23631	4.4	10	40	400	2.84	4047	130	NMRV-P063/150	NRV-P063/150
20622	3.5	10	50	500	2.11	4047	130	NMRV-P063/150	NRV-P063/150
23631	2.9	15	40	600	1.96	4047	145	NMRV-P063/150	NRV-P063/150
20622	2.3	15	50	750	1.45	4047	145	NMRV-P063/150	NRV-P063/150
18587	1.9	30	30	900	1.04	4047	157	NMRV-P063/150	NRV-P063/150

Maximum Torque **lbs*in**	Output Speed **RPM**	Ratio **Stage 1**	Ratio **Stage 2**	Total Ratio **i**	Maximum Power **HP**	OHL		Gear Reducer	
						Output Shaft **lbs**	Input Shaft **lbs**	**Motorized Input**	**Shaft Input**
23631	1.5	30	40	1200	1.09	**4047**	**157**	**NMRV-P063/150**	**NRV-P063/150**
20622	1.2	30	50	1500	0.81	**4047**	**157**	**NMRV-P063/150**	**NRV-P063/150**
18587	1	60	30	1800	0.61	**4047**	**157**	**NMRV-P063/150**	**NRV-P063/150**
23631	0.7	60	40	2400	0.64	**4047**	**157**	**NMRV-P063/150**	**NRV-P063/150**
20622	0.6	60	50	3000	0.48	**4047**	**157**	**NMRV-P063/150**	**NRV-P063/150**
20622	0.4	80	50	4000	0.39	**4047**	**157**	**NMRV-P063/150**	**NRV-P063/150**
20622	0.4	100	50	5000	0.35	**4047**	**157**	**NMRV-P063/150**	**NRV-P063/150**

Double Worm Gear Reducer Ratings - Input Speed 3500 rpm

Maximum Torque lbs*in	Output Speed RPM	Ratio Stage 1	Ratio Stage 2	Total Ratio i	Maximum Power HP	OHL		Gear Reducer	
						Output Shaft lbs	Input Shaft lbs	Motorized Input	Shaft Input
283	35	10	10	100	0.24	323	-	NMRV025/030	-
248	23	7.5	20	150	0.17	407	-	NMRV025/030	-
248	18	10	20	200	0.13	407	-	NMRV025/030	-
301	14	10	25	250	0.14	411	-	NMRV025/030	-
274	12	10	30	300	0.11	411	-	NMRV025/030	-
248	8.8	20	20	400	0.07	407	-	NMRV025/030	-
301	7	20	25	500	0.08	411	-	NMRV025/030	-
274	5.8	20	30	600	0.06	411	-	NMRV025/030	-
301	4.7	30	25	750	0.06	411	-	NMRV025/030	-
204	3.9	15	60	900	0.04	411	-	NMRV025/030	-
248	2.9	30	40	1200	0.03	411	-	NMRV025/030	-
230	2.3	30	50	1500	0.03	411	-	NMRV025/030	-
274	1.9	60	30	1800	0.03	411	-	NMRV025/030	-
248	1.5	60	40	2400	0.02	411	-	NMRV025/030	-
230	1.2	60	50	3000	0.02	411	-	NMRV025/030	-
177	0.9	50	80	4000	0.012	411	-	NMRV025/030	-
583	35	10	10	100	0.49	622	-	NMRV025/040	-
575	23	7.5	20	150	0.35	784	-	NMRV025/040	-
575	18	10	20	200	0.27	784	-	NMRV025/040	-
540	14	10	25	250	0.21	785	-	NMRV025/040	-
646	12	10	30	300	0.24	785	-	NMRV025/040	-
575	8.8	20	20	400	0.15	784	-	NMRV025/040	-
540	7	20	25	500	0.12	785	-	NMRV025/040	-
646	5.8	20	30	600	0.13	785	-	NMRV025/040	-
540	4.7	30	25	750	0.08	785	-	NMRV025/040	-
646	3.9	30	30	900	0.09	785	-	NMRV025/040	-
575	2.9	30	40	1200	0.07	785	-	NMRV025/040	-
531	2.3	30	50	1500	0.05	785	-	NMRV025/040	-
646	1.9	60	30	1800	0.06	785	-	NMRV025/040	-
575	1.5	60	40	2400	0.04	785	-	NMRV025/040	-
531	1.2	60	50	3000	0.03	785	-	NMRV025/040	-
425	0.9	50	80	4000	0.02	785	-	NMRV025/040	-
381	0.7	50	100	5000	0.02	785	-	NMRV025/040	-
628	35	10	10	100	0.53	622	31	NMRV030/040	NRV030/040
637	23	10	15	150	0.38	713	31	NMRV030/040	NRV030/040
575	18	10	20	200	0.27	784	31	NMRV030/040	NRV030/040
540	14	10	25	250	0.21	785	31	NMRV030/040	NRV030/040
646	12	10	30	300	0.24	785	31	NMRV030/040	NRV030/040
575	8.8	10	40	400	0.18	785	31	NMRV030/040	NRV030/040
540	7	20	25	500	0.12	785	33	NMRV030/040	NRV030/040
646	5.8	20	30	600	0.13	785	33	NMRV030/040	NRV030/040
646	4.7	25	30	750	0.11	785	47	NMRV030/040	NRV030/040
646	3.9	30	30	900	0.09	785	47	NMRV030/040	NRV030/040
646	2.9	40	30	1200	0.08	785	29	NMRV030/040	NRV030/040
646	2.3	50	30	1500	0.06	785	29	NMRV030/040	NRV030/040
646	1.9	60	30	1800	0.06	785	28	NMRV030/040	NRV030/040
575	1.5	60	40	2400	0.04	785	28	NMRV030/040	NRV030/040
531	1.2	60	50	3000	0.03	785	28	NMRV030/040	NRV030/040
425	0.9	50	80	4000	0.02	785	29	NMRV030/040	NRV030/040
381	0.7	50	100	5000	0.02	785	29	NMRV030/040	NRV030/040
861	35	10	10	100	0.7	854	31	NMRV030/050	NRV030/050
1194	23	10	15	150	0.7	978	31	NMRV030/050	NRV030/050
1062	18	10	20	200	0.5	1076	31	NMRV030/050	NRV030/050
974	14	10	25	250	0.39	1088	31	NMRV030/050	NRV030/050
1283	12	10	30	300	0.46	1088	31	NMRV030/050	NRV030/050

Maximum Torque lbs*in	Output Speed RPM	Ratio Stage 1	Ratio Stage 2	Total Ratio i	Maximum Power HP	OHL		Gear Reducer	
						Output Shaft lbs	Input Shaft lbs	Motorized Input	Shaft Input
1097	8.8	10	40	400	0.33	1088	31	NMRV030/050	NRV030/050
1062	7	10	50	500	0.27	1088	31	NMRV030/050	NRV030/050
1283	5.8	20	30	600	0.25	1088	33	NMRV030/050	NRV030/050
1283	4.7	25	30	750	0.21	1088	47	NMRV030/050	NRV030/050
1283	3.9	30	30	900	0.18	1088	47	NMRV030/050	NRV030/050
1283	2.9	40	30	1200	0.15	1088	29	NMRV030/050	NRV030/050
1283	2.3	50	30	1500	0.13	1088	29	NMRV030/050	NRV030/050
1283	1.9	60	30	1800	0.11	1088	28	NMRV030/050	NRV030/050
1097	1.5	60	40	2400	0.08	1088	28	NMRV030/050	NRV030/050
1062	1.2	60	50	3000	0.07	1088	28	NMRV030/050	NRV030/050
726	0.9	50	80	4000	0.04	1088	29	NMRV030/050	NRV030/050
699	0.7	50	100	5000	0.03	1088	29	NMRV030/050	NRV030/050
1213	35	10	10	100	0.97	854	61	NMRV040/050	NRV040/050
1195	23	10	15	150	0.69	978	61	NMRV040/050	NRV040/050
1062	18	10	20	200	0.49	1076	61	NMRV040/050	NRV040/050
974	14	10	25	250	0.38	1088	61	NMRV040/050	NRV040/050
1283	12	10	30	300	0.45	1088	61	NMRV040/050	NRV040/050
1097	8.8	10	40	400	0.32	1088	61	NMRV040/050	NRV040/050
1213	7	50	10	500	0.25	854	79	NMRV040/050	NRV040/050
1283	5.8	20	30	600	0.24	1088	46	NMRV040/050	NRV040/050
1283	4.7	25	30	750	0.2	1088	53	NMRV040/050	NRV040/050
1195	3.9	60	15	900	0.15	978	79	NMRV040/050	NRV040/050
1283	2.9	40	30	1200	0.14	1088	79	NMRV040/050	NRV040/050
1283	2.3	50	30	1500	0.11	1088	79	NMRV040/050	NRV040/050
1283	1.9	60	30	1800	0.1	1088	79	NMRV040/050	NRV040/050
1097	1.5	60	40	2400	0.07	1088	79	NMRV040/050	NRV040/050
1062	1.2	60	50	3000	0.06	1088	79	NMRV040/050	NRV040/050
1062	0.9	80	50	4000	0.05	1088	79	NMRV040/050	NRV040/050
1062	0.7	100	50	5000	0.04	1088	79	NMRV040/050	NRV040/050
861	35	10	10	100	0.7	1117	31	NMRV-P030/063	NRV-P030/063
1210	23	10	15	150	0.7	1278	31	NMRV-P030/063	NRV-P030/063
1526	18	10	20	200	0.7	1407	31	NMRV-P030/063	NRV-P030/063
1826	14	10	25	250	0.7	1410	31	NMRV-P030/063	NRV-P030/063
2259	12	7.5	40	300	0.86	1410	28	NMRV-P030/063	NRV-P030/063
2259	8.8	10	40	400	0.65	1410	31	NMRV-P030/063	NRV-P030/063
2089	7	10	50	500	0.52	1410	31	NMRV-P030/063	NRV-P030/063
1849	5.8	20	30	600	0.36	1410	33	NMRV-P030/063	NRV-P030/063
2398	4.7	25	30	750	0.39	1410	47	NMRV-P030/063	NRV-P030/063
2306	3.9	30	30	900	0.32	1410	47	NMRV-P030/063	NRV-P030/063
2160	2.9	40	30	1200	0.24	1410	29	NMRV-P030/063	NRV-P030/063
1995	2.3	50	30	1500	0.19	1410	29	NMRV-P030/063	NRV-P030/063
1849	1.9	60	30	1800	0.16	1410	28	NMRV-P030/063	NRV-P030/063
2259	1.5	60	40	2400	0.16	1410	28	NMRV-P030/063	NRV-P030/063
2089	1.2	60	50	3000	0.13	1410	28	NMRV-P030/063	NRV-P030/063
2089	0.9	80	50	4000	0.11	1410	29	NMRV-P030/063	NRV-P030/063
1328	0.7	50	100	5000	0.06	1410	29	NMRV-P030/063	NRV-P030/063
1928	35	10	10	100	1.54	1117	61	NMRV-P040/063	NRV-P040/063
2300	23	10	15	150	1.31	1278	61	NMRV-P040/063	NRV-P040/063
2239	18	10	20	200	1.01	1407	61	NMRV-P040/063	NRV-P040/063
2045	14	10	25	250	0.77	1410	61	NMRV-P040/063	NRV-P040/063
2398	12	10	30	300	0.83	1410	61	NMRV-P040/063	NRV-P040/063
2259	8.8	10	40	400	0.64	1410	61	NMRV-P040/063	NRV-P040/063
2045	7	20	25	500	0.41	1410	46	NMRV-P040/063	NRV-P040/063
2398	5.8	20	30	600	0.44	1410	46	NMRV-P040/063	NRV-P040/063
2398	4.7	25	30	750	0.36	1410	53	NMRV-P040/063	NRV-P040/063
2398	3.9	30	30	900	0.32	1410	79	NMRV-P040/063	NRV-P040/063
2398	2.9	40	30	1200	0.25	1410	79	NMRV-P040/063	NRV-P040/063
2398	2.3	50	30	1500	0.21	1410	79	NMRV-P040/063	NRV-P040/063

Maximum Torque lbs*in	Output Speed RPM	Ratio Stage 1	Ratio Stage 2	Total Ratio i	Maximum Power HP	OHL		Gear Reducer	
						Output Shaft lbs	Input Shaft lbs	Motorized Input	Shaft Input
2398	1.9	60	30	1800	0.18	1410	79	NMRV-P040/063	NRV-P040/063
2259	1.5	60	40	2400	0.14	1410	79	NMRV-P040/063	NRV-P040/063
2089	1.2	60	50	3000	0.11	1410	79	NMRV-P040/063	NRV-P040/063
2089	0.9	80	50	4000	0.09	1410	79	NMRV-P040/063	NRV-P040/063
2089	0.7	100	50	5000	0.08	1410	79	NMRV-P040/063	NRV-P040/063
1953	35	10	10	100	1.54	1318	61	NMRV-P040/075	NRV-P040/075
2782	23	10	15	150	1.54	1509	61	NMRV-P040/075	NRV-P040/075
3515	18	10	20	200	1.54	1659	61	NMRV-P040/075	NRV-P040/075
3359	14	10	25	250	1.23	1659	61	NMRV-P040/075	NRV-P040/075
3929	12	10	30	300	1.29	1659	61	NMRV-P040/075	NRV-P040/075
3664	8.8	10	40	400	0.98	1659	61	NMRV-P040/075	NRV-P040/075
3257	7	10	50	500	0.76	1659	61	NMRV-P040/075	NRV-P040/075
3929	5.8	20	30	600	0.68	1659	46	NMRV-P040/075	NRV-P040/075
3929	4.7	25	30	750	0.57	1659	53	NMRV-P040/075	NRV-P040/075
3929	3.9	30	30	900	0.49	1659	79	NMRV-P040/075	NRV-P040/075
3929	2.9	40	30	1200	0.39	1659	79	NMRV-P040/075	NRV-P040/075
3929	2.3	50	30	1500	0.33	1659	79	NMRV-P040/075	NRV-P040/075
3929	1.9	60	30	1800	0.29	1659	79	NMRV-P040/075	NRV-P040/075
3664	1.5	60	40	2400	0.22	1659	79	NMRV-P040/075	NRV-P040/075
3257	1.2	60	50	3000	0.17	1659	79	NMRV-P040/075	NRV-P040/075
3257	0.9	80	50	4000	0.14	1659	79	NMRV-P040/075	NRV-P040/075
3257	0.7	100	50	5000	0.12	1659	79	NMRV-P040/075	NRV-P040/075
2001	35	10	10	100	1.54	1458	61	NMRV-P040/090	NRV-P040/090
2856	23	10	15	150	1.54	1669	61	NMRV-P040/090	NRV-P040/090
3661	18	10	20	200	1.54	1838	61	NMRV-P040/090	NRV-P040/090
4393	14	10	25	250	1.54	1839	61	NMRV-P040/090	NRV-P040/090
4906	12	10	30	300	1.54	1839	61	NMRV-P040/090	NRV-P040/090
5399	8.8	10	40	400	1.37	1839	61	NMRV-P040/090	NRV-P040/090
4956	7	10	50	500	1.08	1839	61	NMRV-P040/090	NRV-P040/090
4906	5.8	20	30	600	0.82	1839	46	NMRV-P040/090	NRV-P040/090
4725	4.7	25	30	750	0.65	1839	53	NMRV-P040/090	NRV-P040/090
5750	3.9	30	30	900	0.69	1839	79	NMRV-P040/090	NRV-P040/090
5248	2.9	40	30	1200	0.5	1839	79	NMRV-P040/090	NRV-P040/090
5067	2.3	50	30	1500	0.41	1839	79	NMRV-P040/090	NRV-P040/090
4725	1.9	60	30	1800	0.33	1839	79	NMRV-P040/090	NRV-P040/090
5399	1.5	60	40	2400	0.31	1839	79	NMRV-P040/090	NRV-P040/090
4956	1.2	60	50	3000	0.24	1839	79	NMRV-P040/090	NRV-P040/090
4956	0.9	80	50	4000	0.2	1839	79	NMRV-P040/090	NRV-P040/090
4956	0.7	100	50	5000	0.17	1839	79	NMRV-P040/090	NRV-P040/090
3724	35	10	10	100	2.83	1458	85	NMRV-P050/090	NRV-P050/090
5313	23	10	15	150	2.83	1669	85	NMRV-P050/090	NRV-P050/090
5399	18	10	20	200	2.25	1838	85	NMRV-P050/090	NRV-P050/090
5045	14	10	25	250	1.75	1839	85	NMRV-P050/090	NRV-P050/090
6196	12	10	30	300	1.92	1839	85	NMRV-P050/090	NRV-P050/090
5399	8.8	10	40	400	1.36	1839	85	NMRV-P050/090	NRV-P050/090
5045	7	20	25	500	0.94	1839	94	NMRV-P050/090	NRV-P050/090
6196	5.8	20	30	600	1.03	1839	94	NMRV-P050/090	NRV-P050/090
6196	4.7	25	30	750	0.85	1839	108	NMRV-P050/090	NRV-P050/090
6196	3.9	30	30	900	0.74	1839	110	NMRV-P050/090	NRV-P050/090
6196	2.9	40	30	1200	0.58	1839	110	NMRV-P050/090	NRV-P050/090
6196	2.3	50	30	1500	0.49	1839	110	NMRV-P050/090	NRV-P050/090
6196	1.9	60	30	1800	0.43	1839	110	NMRV-P050/090	NRV-P050/090
5399	1.5	60	40	2400	0.3	1839	110	NMRV-P050/090	NRV-P050/090
4956	1.2	60	50	3000	0.24	1839	110	NMRV-P050/090	NRV-P050/090
4956	0.9	80	50	4000	0.19	1839	110	NMRV-P050/090	NRV-P050/090
4956	0.7	100	50	5000	0.17	1839	110	NMRV-P050/090	NRV-P050/090
3724	35	10	10	100	2.83	1843	85	NMRV-P050/110	NRV-P050/110
5382	23	10	15	150	2.83	2110	85	NMRV-P050/110	NRV-P050/110

Maximum Torque lbs*in	Output Speed RPM	Ratio Stage 1	Ratio Stage 2	Total Ratio i	Maximum Power HP	OHL		Gear Reducer	
						Output Shaft lbs	Input Shaft lbs	Motorized Input	Shaft Input
6994	18	10	20	200	2.83	2320	85	NMRV-P050/110	NRV-P050/110
8515	14	10	25	250	2.83	2320	85	NMRV-P050/110	NRV-P050/110
9128	12	10	30	300	2.83	2320	85	NMRV-P050/110	NRV-P050/110
10488	8.8	10	40	400	2.52	2320	85	NMRV-P050/110	NRV-P050/110
8365	7	20	25	500	1.49	2320	94	NMRV-P050/110	NRV-P050/110
8967	5.8	20	30	600	1.49	2320	94	NMRV-P050/110	NRV-P050/110
8626	4.7	25	30	750	1.18	2320	108	NMRV-P050/110	NRV-P050/110
10817	3.9	30	30	900	1.29	2320	110	NMRV-P050/110	NRV-P050/110
9973	2.9	40	30	1200	0.93	2320	110	NMRV-P050/110	NRV-P050/110
8967	2.3	50	30	1500	0.71	2320	110	NMRV-P050/110	NRV-P050/110
8445	1.9	60	30	1800	0.58	2320	110	NMRV-P050/110	NRV-P050/110
10488	1.5	60	40	2400	0.56	2320	110	NMRV-P050/110	NRV-P050/110
9736	1.2	60	50	3000	0.43	2320	110	NMRV-P050/110	NRV-P050/110
9736	0.9	80	50	4000	0.35	2320	110	NMRV-P050/110	NRV-P050/110
9736	0.7	100	50	5000	0.31	2320	110	NMRV-P050/110	NRV-P050/110
6873	35	10	10	100	5.11	1843	106	NMRV-P063/110	NRV-P063/110
9932	23	10	15	150	5.11	2110	106	NMRV-P063/110	NRV-P063/110
10081	18	10	20	200	3.99	2320	106	NMRV-P063/110	NRV-P063/110
10382	14	10	25	250	3.38	2320	106	NMRV-P063/110	NRV-P063/110
11196	12	10	30	300	3.4	2320	106	NMRV-P063/110	NRV-P063/110
10488	8.8	10	40	400	2.46	2320	106	NMRV-P063/110	NRV-P063/110
10382	7	20	25	500	1.77	2320	119	NMRV-P063/110	NRV-P063/110
11196	5.8	20	30	600	1.78	2320	119	NMRV-P063/110	NRV-P063/110
11196	4.7	25	30	750	1.46	2320	132	NMRV-P063/110	NRV-P063/110
11196	3.9	30	30	900	1.26	2320	157	NMRV-P063/110	NRV-P063/110
11196	2.9	40	30	1200	0.98	2320	157	NMRV-P063/110	NRV-P063/110
11196	2.3	50	30	1500	0.82	2320	157	NMRV-P063/110	NRV-P063/110
11196	1.9	60	30	1800	0.72	2320	157	NMRV-P063/110	NRV-P063/110
10488	1.5	60	40	2400	0.52	2320	157	NMRV-P063/110	NRV-P063/110
9736	1.2	60	50	3000	0.4	2320	157	NMRV-P063/110	NRV-P063/110
9736	0.9	80	50	4000	0.33	2320	157	NMRV-P063/110	NRV-P063/110
9736	0.7	100	50	5000	0.29	2320	157	NMRV-P063/110	NRV-P063/110
6957	35	10	10	100	5.11	2410	106	NMRV-P063/130	NRV-P063/130
9806	23	10	15	150	5.11	2759	106	NMRV-P063/130	NRV-P063/130
12907	18	10	20	200	5.11	3035	106	NMRV-P063/130	NRV-P063/130
13542	14	10	25	250	4.41	3035	106	NMRV-P063/130	NRV-P063/130
15577	12	10	30	300	4.66	3035	106	NMRV-P063/130	NRV-P063/130
14604	8.8	10	40	400	3.43	3035	106	NMRV-P063/130	NRV-P063/130
13719	7	10	50	500	2.7	3035	106	NMRV-P063/130	NRV-P063/130
15577	5.8	20	30	600	2.44	3035	119	NMRV-P063/130	NRV-P063/130
15577	4.7	25	30	750	2	3035	132	NMRV-P063/130	NRV-P063/130
15577	3.9	30	30	900	1.72	3035	157	NMRV-P063/130	NRV-P063/130
15577	2.9	40	30	1200	1.34	3035	157	NMRV-P063/130	NRV-P063/130
15577	2.3	50	30	1500	1.13	3035	157	NMRV-P063/130	NRV-P063/130
15577	1.9	60	30	1800	0.98	3035	157	NMRV-P063/130	NRV-P063/130
14604	1.5	60	40	2400	0.72	3035	157	NMRV-P063/130	NRV-P063/130
13719	1.2	60	50	3000	0.57	3035	157	NMRV-P063/130	NRV-P063/130
13719	0.9	80	50	4000	0.46	3035	157	NMRV-P063/130	NRV-P063/130
13719	0.7	100	50	5000	0.4	3035	157	NMRV-P063/130	NRV-P063/130
12219	23	7.5	20	150	6.39	4047	89	NMRV-P063/150	NRV-P063/150
12907	18	10	20	200	5.11	4047	106	NMRV-P063/150	NRV-P063/150
15715	14	10	25	250	5.11	4047	106	NMRV-P063/150	NRV-P063/150
13633	12	15	20	300	3.68	4047	111	NMRV-P063/150	NRV-P063/150
22127	8.8	10	40	400	5.11	4047	106	NMRV-P063/150	NRV-P063/150
20622	7	10	50	500	4.06	4047	106	NMRV-P063/150	NRV-P063/150
23370	5.8	15	40	600	3.68	4047	111	NMRV-P063/150	NRV-P063/150
20622	4.7	15	50	750	2.77	4047	111	NMRV-P063/150	NRV-P063/150
18587	3.9	30	30	900	1.92	4047	157	NMRV-P063/150	NRV-P063/150

Maximum Torque lbs*in	Output Speed RPM	Ratio Stage 1	Ratio Stage 2	Total Ratio i	Maximum Power HP	OHL		Gear Reducer	
						Output Shaft lbs	Input Shaft lbs	Motorized Input	Shaft Input
23631	2.9	30	40	1200	2.02	**4047**	**157**	**NMRV-P063/150**	**NRV-P063/150**
20622	2.3	30	50	1500	1.5	**4047**	**157**	**NMRV-P063/150**	**NRV-P063/150**
17585	1.9	60	30	1800	1.03	**4047**	**157**	**NMRV-P063/150**	**NRV-P063/150**
21198	1.5	60	40	2400	1.03	**4047**	**157**	**NMRV-P063/150**	**NRV-P063/150**
20622	1.2	60	50	3000	0.86	**4047**	**157**	**NMRV-P063/150**	**NRV-P063/150**
20622	0.9	80	50	4000	0.69	**4047**	**157**	**NMRV-P063/150**	**NRV-P063/150**
19874	0.7	100	50	5000	0.58	**4047**	**157**	**NMRV-P063/150**	**NRV-P063/150**

NMRV 025 - Dimensions

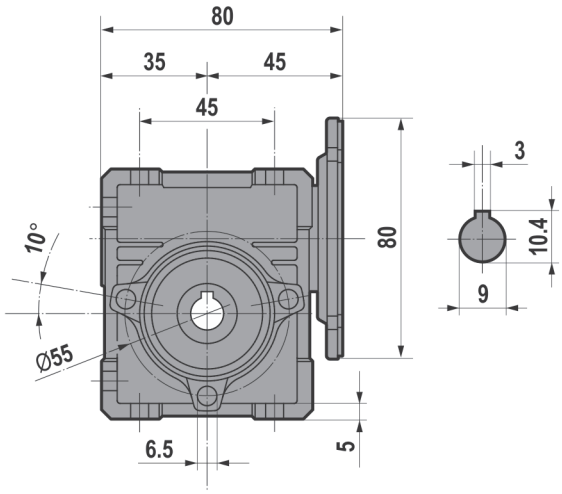

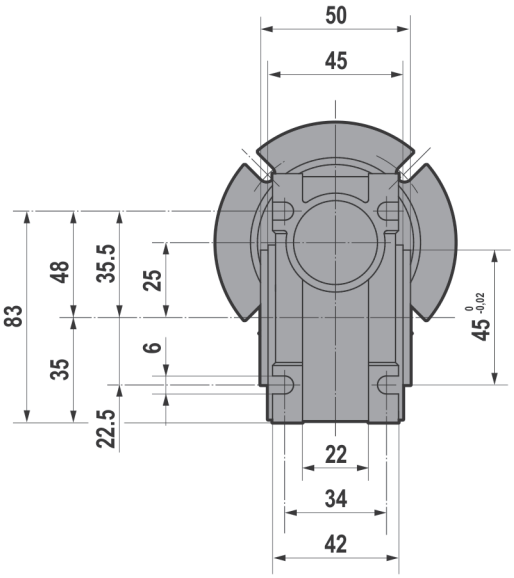

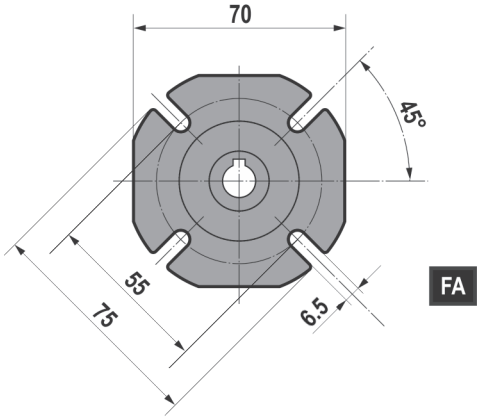

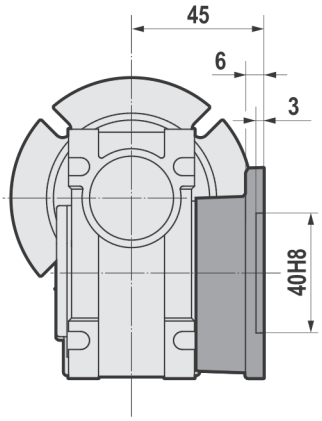

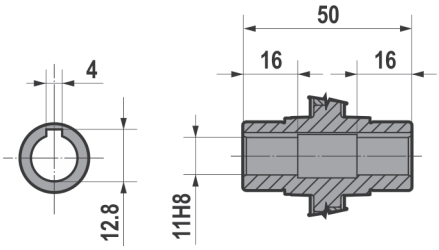

- Weight without motor ~1.54 lb
- the above values are expressed in millimeters

NMRV/NMRV-P 030-150 - Dimensions

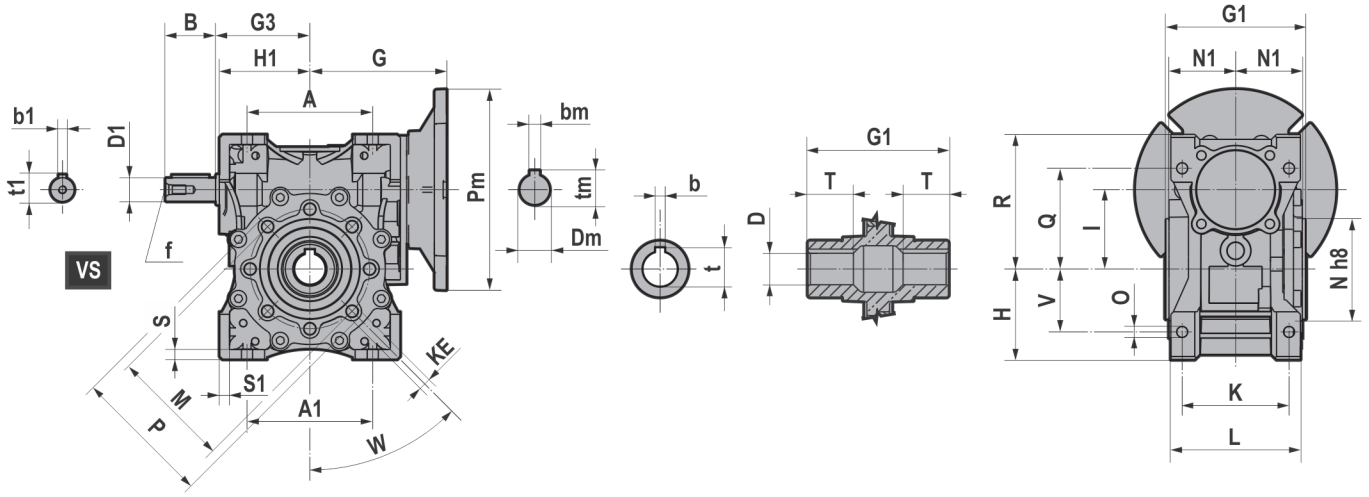

	025	030	040	050	063	075	090	110	130	150
A	1.77	2.13	2.76	3.15	3.94	4.72	5.51	6.69	7.87	9.45
A1	1.77	2.13	2.76	3.15	3.94	4.72	5.51	6.46 - 6.69	7.87	9.45
B	-	1.18	1.18	1.57	1.97	2.36	2.36	2.76	3.15	3.15
D	-	0.625	0.750	1.000	1.125	1.250	1.375	1.625	1.750	2.000
D1	-	0.375	0.500	0.625	0.750	0.875	0.875	1.125	1.250	1.375
G	-	2.64	3.15	3.54	4.82	5.51 (56C/140TC) 5.89 (180TC)	6.24 (56C/140TC) 6.63 (180TC)	6.24 (140TC) 7.15 (180TC)	7.60	8.46
G1	1.97	2.48	3.07	3.62	4.41	4.72	5.51	6.10	6.69	7.87
G3	-	1.77	2.09	2.52	2.95	3.54	4.25	5.31	6.10	6.89
H	1.38	1.57	1.97	2.36	2.83	3.39	4.06	5.02	5.81	6.69
H1	1.38	1.57	1.97	2.36	2.83	3.50	4.06	5.02	5.81	6.69
I	0.98	1.18	1.57	1.97	2.48	2.95	3.54	4.33	5.12	5.91
K	1.34	1.73	2.36	2.76	3.35	3.54 - 3.74	3.94	4.53	4.72	5.71
KE	6.5 n°3	M6*8 n°4	M6*11 n°4	M8*10 n°4	M8*14 n°8	M8*14 n°8	M10*18 n°8	M10*18 n°8	M12*21 n°8	M12*21 n°8
L	1.65	2.20	2.80	3.35	4.06	4.41	5.12	5.67	6.10	7.28
M	2.17	2.56	2.95	3.35	3.74	4.53	5.12	6.50	8.46	8.46
N	1.77	2.17	2.36	2.76	3.15	3.74	4.33	5.12	7.09	7.09
N1	0.89	1.14	1.44	1.71	2.09	2.24	2.64	2.91	3.19	3.78
O	0.24	0.26	0.26	0.33	0.33	0.43	0.51	0.55	0.63	0.71
P	-	2.95	3.43	3.94	4.33	5.16	6.30	7.87	9.84	9.84
Q	1.40	1.73	2.17	2.52	3.15	3.66	4.02	4.92	5.51	7.09
R	1.89	2.24	2.81	3.31	4.21	4.84	5.67	6.59	7.38	9.06
S	0.20	0.22	0.26	0.28	0.31	0.39	0.43	0.57	0.61	0.71
S1	0.20	0.22	0.26	0.28	0.31	0.51	0.43	0.57	0.61	0.71
T	0.63	0.83	1.02	1.18	1.42	1.57	1.77	1.97	2.36	2.85
V	0.89	1.06	1.38	1.57	1.97	2.36	2.76	3.23 - 3.35	3.94	4.72
W	0°	0°	45°	45°	45°	45°	45°	45°	45°	45°
b	-	0.1875	0.1875	0.250	0.250	0.250	0.3125	0.375	0.375	0.500
t	-	0.71	0.84	1.11	1.24	1.37	1.52	1.80	1.92	2.22
b1	-	0.09375	0.125	0.1875	0.1875	0.1875	0.1875	0.250	0.250	0.3125
t1	-	0.42	0.55	0.70	0.83	0.96	0.96	1.24	1.36	1.15
f	-	-	-	1/4-20	1/4-20	1/4-20	1/4-20	3/8-16	1/2-13	1/2-13
~lb	2	3	5	8	14	20	29	46	96	170

With lubricant | Without lubricant

(..) Only on request

Dimensions D have tolerance of +0.001 - 0
Dimensions D1 have tolerance of +0 - 0.0005

- For the dimensions concerning the motor connection area (Pm, Dm, bm, tm) please refer to the table shown at page 112.

NMRV/NMRV-P 030-150F Output Flange Style

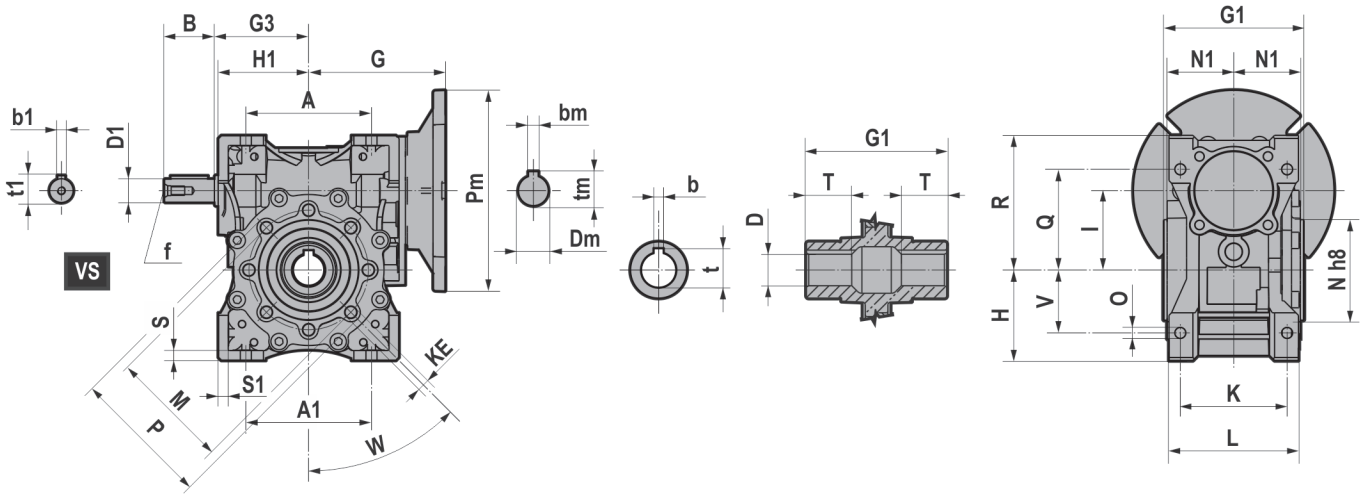

IEC input flange and metric shaft options

Dimensions are in mm

	025	030	040	050	063	075	090	110	130	150
D (H8)	11	14	18 (19)	25 (24)	25 (28)	28 (30) (32) (35)	35 (38) (40)	42	45	50
D1 (j6)	-	9	11	14	19	24	24	28	30	35
G	45	55	70	80	109	126.5	145	185.5 (input flange 132) 168 (input flange 80-112)	180	210
b	4	5	6 (6)	8 (8)	8 (8)	8 (8) (10) (10)	10 (10) (12)	12	14	14
t	12.8	16.3	20.8 (21.8)	28.3 (27.3)	28.3 (31.3)	31.3 (33.3) (35.3) (38.3)	38.3 (41.3) (43.3)	45.3	48.8	53.8
b1	-	3	4	5	6	8	8	8	8	10
t1	-	10.2	12.5	16	21.5	27	27	31	33	38
f	-	-	-	M6	M6	M8	M8	M10	M10	M12

NMRV/NMRV-P 030-150F Output Flange Style

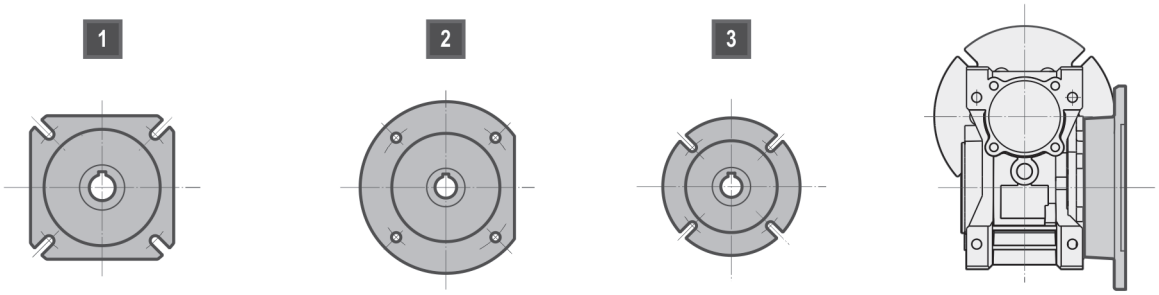

	030	040	050	063	075	090	110	130	150
FA	1	1	1	1	1	1	1	1	1
FB	-	1	1	1	3	2	1	-	-
FC	-	2	2	2	-	3	-	-	-
FD	-	2	2	2	-	1	-	-	-
FE	-	-	-	3	-	-	-	-	-

NMRV/NMRV-P030-150F - Dimensions

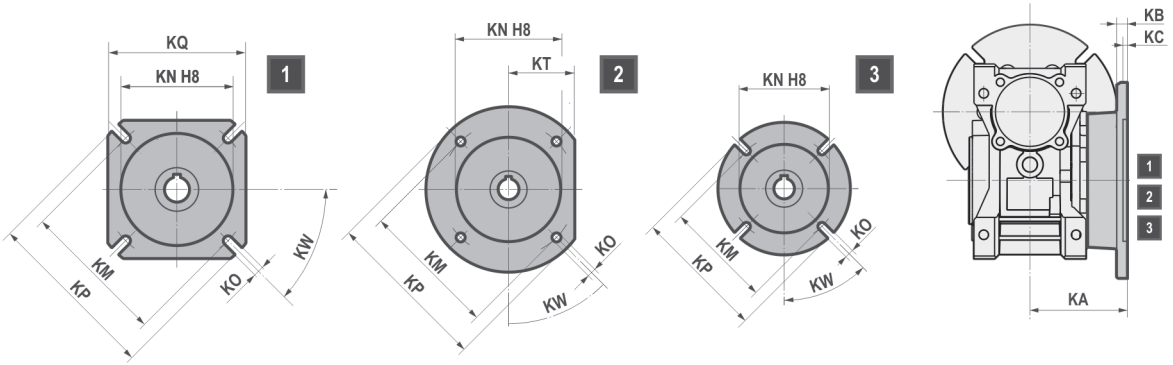

		025	030	040	050	063	075	090	110	130	150
FA	KA	1.77	2.15	2.64	3.54	3.23	4.37	4.37	5.16	5.51	6.10
	KB	0.24	0.24	0.28	0.35	0.39	0.51	0.51	0.59	0.59	0.59
	KC	0.12	0.16	0.16	0.20	0.24	0.24	0.24	0.24	0.24	0.24
	KN	1.57	1.97	2.36	2.76	4.53	5.12	5.98	6.69	7.09	7.09
	KM	2.17	2.68	3.15 min	3.54 min	5.91	6.50	6.89	9.06	10.04	10.04
	KO	0.26 (n°4)	0.26 (n°4)	0.35 (n°4)	0.43 (n°4)	0.43 (n°4)	0.55 (n°4)	0.55 (n°4)	0.55 (n°8)	0.63 (n°8)	0.63 (n°8)
	KP	2.95	3.15	4.33	4.92	7.09	7.87	8.27	11.02	12.60	12.60
	KQ	2.76	2.76	3.74	4.33	5.59	6.69	7.87	10.24	11.42	11.42
	KW	45°	45°	45°	45°	45°	45°	45°	45°	22.5°	22.5°
FB	KA	-	-	3.82	4.72	4.41	3.54	4.80	7.09	-	-
	KB	-	-	0.28	0.35	0.39	0.51	0.71	0.59	-	-
	KC	-	-	0.16	0.20	0.24	0.24	0.24	0.24	-	-
	KN	-	-	2.36	2.76	4.53	4.33	7.09	6.69	-	-
	KM	-	-	3.15 min	3.54 min	5.91	5.12	8.46	9.06	-	-
	KO	-	-	0.35 (n°4)	0.43 (n°4)	0.43 (n°4)	0.55 (n°4)	0.55 (n°4)	0.55 (n°8)	-	-
	KP	-	-	4.33	4.92	7.09	6.30	9.84	11.02	-	-
	KQ	-	-	3.74	4.33	5.59	-	-	10.24	-	-
	KT	-	-	-	-	-	-	4.13	-	-	-
	KW	-	-	45°	45°	45°	45°	45°	45°	-	-
FC	KA	-	-	3.15	3.50	3.86	-	4.33	-	-	-
	KB	-	-	0.35	0.39	0.39	-	0.67	-	-	-
	KC	-	-	0.20	0.20	0.20	-	0.24	-	-	-
	KN	-	-	3.74	4.33	5.12	-	5.12	-	-	-
	KM	-	-	4.53	5.12	6.50	-	6.50	-	-	-
	KO	-	-	0.37 (n°4)	0.37 (n°4)	0.43 (n°4)	-	0.43 (n°4)	-	-	-
	KP	-	-	5.51	6.30	7.87	-	7.87	-	-	-
	KT	-	-	2.20	2.60	3.15	-	-	-	-	-
	KW	-	-	45°	45°	45°	-	45°	-	-	-
FD	KA	-	-	2.28	2.83	4.21	-	5.94	-	-	-
	KB	-	-	0.47	0.57	0.39	-	0.51	-	-	-
	KC	-	-	0.20	0.20	0.20	-	0.24	-	-	-
	KN	-	-	3.15	3.74	5.12	-	5.98	-	-	-
	KM	-	-	3.94	4.53	6.50	-	6.89	-	-	-
	KO	-	-	0.35 (n°4)	0.43 (n°4)	0.43 (n°4)	-	0.55 (n°4)	-	-	-
	KP	-	-	4.72	5.51	7.87	-	8.27	-	-	-
	KQ	-	-	-	-	-	-	7.87	-	-	-
	KT	-	-	1.97	2.36	-	-	-	-	-	-
	KW	-	-	45°	45°	45°	-	45°	-	-	-
FE	KA	-	-	-	-	3.17	-	-	-	-	-
	KB	-	-	-	-	0.65	-	-	-	-	-
	KC	-	-	-	-	0.20	-	-	-	-	-
	KN	-	-	-	-	4.33	-	-	-	-	-
	KM	-	-	-	-	5.12	-	-	-	-	-
	KO	-	-	-	-	0.43 (n°4)	-	-	-	-	-
	KP	-	-	-	-	6.30	-	-	-	-	-
	KW	-	-	-	-	45°	-	-	-	-	-

HA31+NMRV - Dimensions

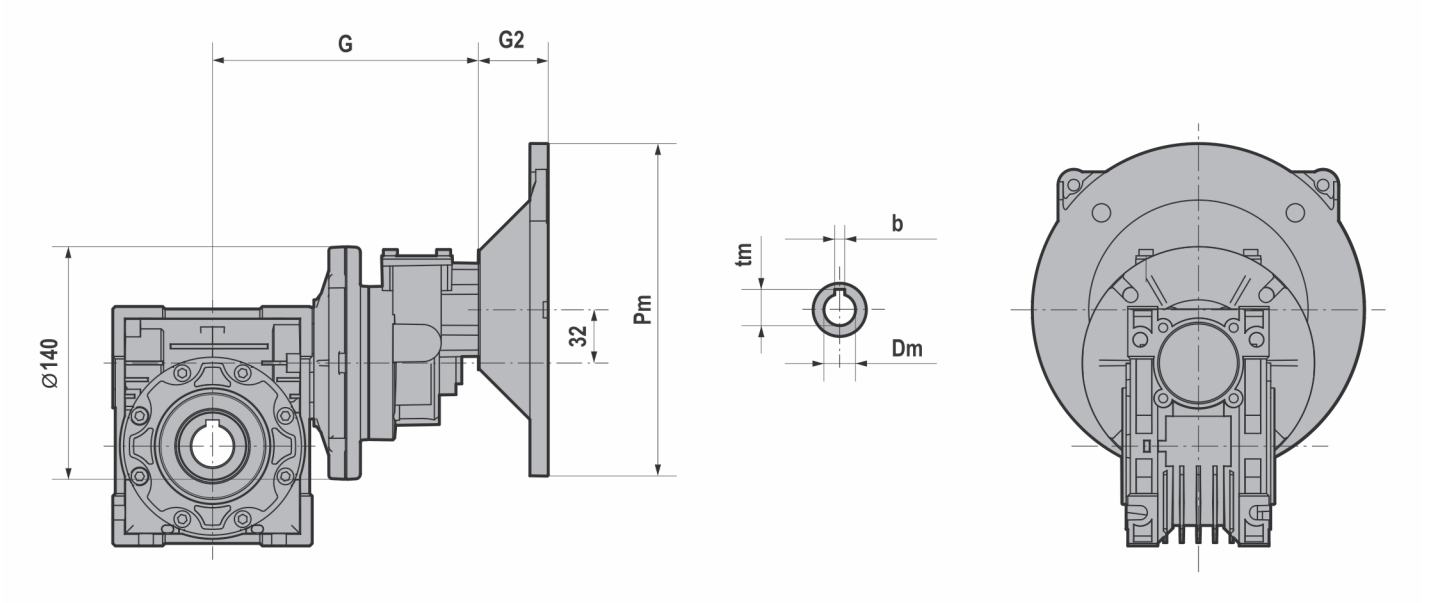

	040			050		
	G	G2	~ lb	G	G2	~ lb
063	150	25	9.26	160	25	11.9
071	150	32	9.48	160	32	12.13
080	150	42	9.92	160	42	12.57

- Dimensions are in mm
- **~ lb** Weight without motor
- For the dimensions concerning the motor connection area (Pm, Dm, bm, tm) please refer to the table shown at page 112.

NMRVpower/HW - Dimensions

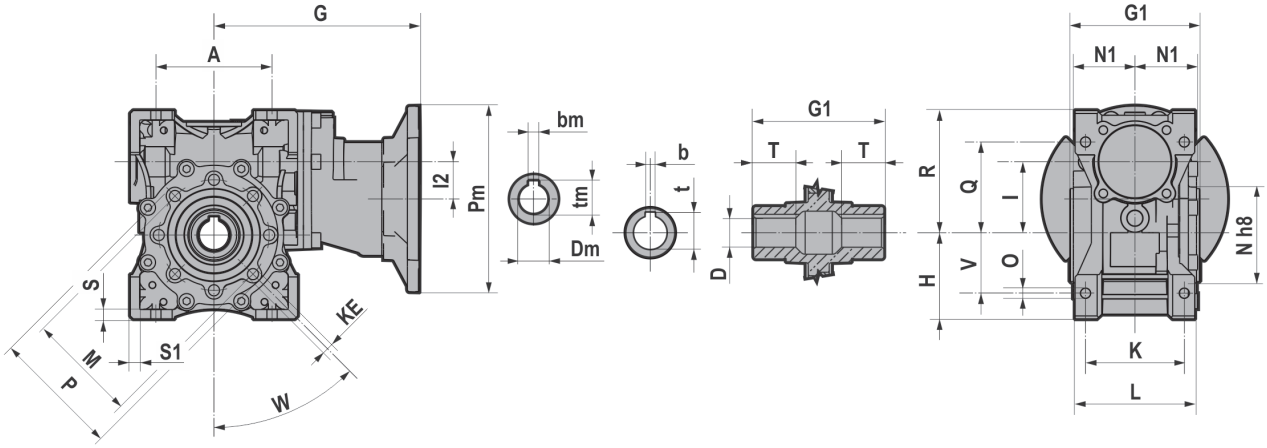

	HW030		HW040	
	56C/140TC		56C/140TC/180TC	
	NMRVpower 063	NMRVpower 075	NMRVpower 090	NMRVpower 110
A	3.94	4.72	5.51	6.69
G	7.48	8.17	9.11	10.02 (56C/140TC) 10.40 (180TC)
G1	4.41	4.72	5.51	6.10
H	2.83	3.39	4.06	5.02
I	2.48	2.95	3.54	4.33
I2	1.26	1.26	1.65	1.65
L	4.06	4.41	5.12	5.67
K	3.35	3.54 - 3.74	3.94	4.53
KE	M8*14(8)	M8*14(8)	M10*18(8)	M10*18(8)
M	3.74	4.53	5.12	6.50
N	3.15	3.74	4.33	5.12
N1	2.09	2.20	2.64	2.91
O	0.33	0.43	0.51	0.55
P	4.33	5.16	5.98	7.40
Q	3.15	3.66	4.02	4.92
R	4.21	4.84	5.67	6.59
S	0.31	0.39	0.43	0.63
S1	0.31	0.51	0.43	0.63
T	1.42	1.57	1.77	1.97
V	1.97	2.36	2.76	3.35
W	45°	45°	45°	45°
D	1.125	1.250	1.375	1.625
b	0.250	0.250	0.3125	0.375
t	1.24	1.37	1.52	1.80
~lb	16	22	32	54

IEC input flange and metric shaft options

	HW030		HW040	
	056/063/071/080		063/071/080/090	
	NMRVpower 063	NMRVpower 075	NMRVpower 090	NMRVpower 110
G	176.5 mm	194 mm	218 mm	241 mm
D (H8)	25 (28) mm	28 (35) mm	35 mm	42 mm
b	8 (8) mm	8 (10) mm	10 mm	12 mm
t	28.3 (31.3) mm	31.3 (38.3) mm	38.3 mm	45.3 mm

- For the dimensions concerning the motor connection area (Pm, Dm, bm, tm) please refer to the table shown at page 112.
- For all other dimensions, please consider the drawing of relevant NMRV size.
- **~lb** Weight without motor

NMRVpower/IHW - Dimensions

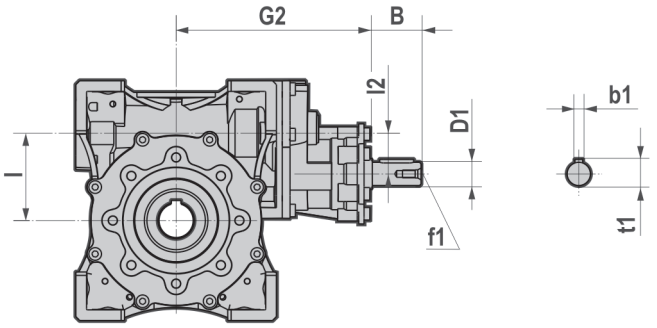

IHW040	B	G2	l	l2	D1	b1	t1	f1	~lb
NMRVpower 090	1.57	8.05	3.54	1.65	19 mm j6	6 mm	21.5 mm	M6	32
NMRVpower 110	1.97	8.96	4.33	1.65	24 mm j6	8 mm	27 mm	M8	54

NMRV+NMRV - NMRV+NMRVpower - Dimensions

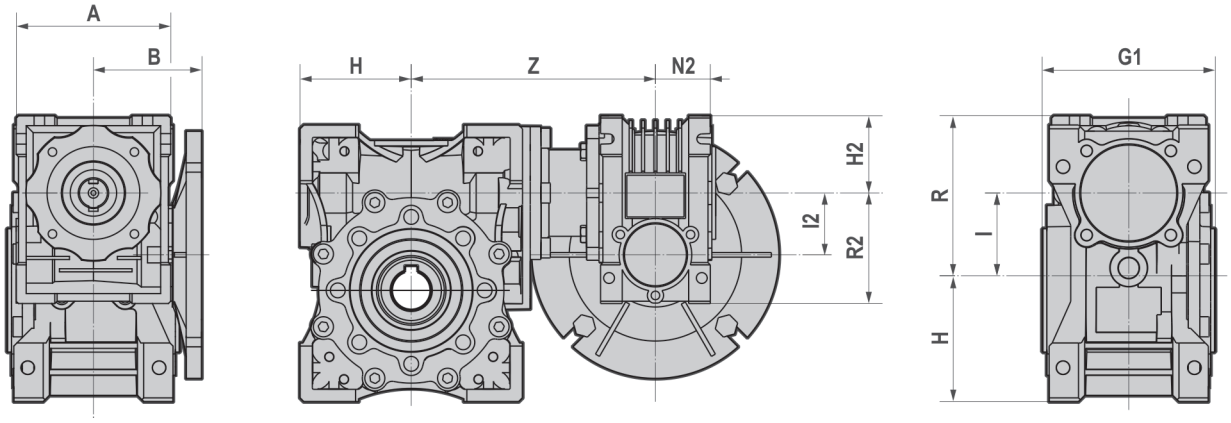

	A	B	G1	H	l	R	H2	l2	N2	R2	Z	~lb
025-030	2.76	1.77	2.48	1.57	1.18	2.24	1.38	0.98	0.89	1.89	4.53	4
025-040	2.76	1.77	3.07	1.97	1.57	2.81	1.38	0.98	0.89	1.89	4.53	7
030-040	3.15	2.17	3.07	1.97	1.57	2.81	1.57	1.18	1.14	2.24	4.80	8
030-050	3.15	2.17	3.62	2.36	1.97	3.31	1.57	1.18	1.14	2.24	5.20	10
030-063	3.15	2.17	4.41	2.83	2.48	4.21	1.57	1.18	1.14	2.24	5.91	16
040-050	3.94	2.76	3.62	2.36	1.97	3.31	1.97	1.57	1.44	2.81	5.53	13
040-063	3.94	2.76	4.41	2.83	2.48	4.21	1.97	1.57	1.44	2.81	6.34	19
040-075	3.94	2.76	4.72	3.50	2.95	4.84	1.97	1.57	1.44	2.81	7.03	25
040-090	3.94	2.76	5.51	4.06	3.54	5.67	1.97	1.57	1.44	2.81	7.76	34
050-075	4.72	3.15	4.72	3.50	2.95	4.84	2.36	1.97	1.71	3.31	7.70	28
050-090	4.72	3.15	5.51	4.06	3.54	5.67	2.36	1.97	1.71	3.31	8.43	36
050-110	4.72	3.15	6.10	5.02	4.33	6.59	2.36	1.97	1.71	3.31	9.33	54
063-075	5.67	4.29	4.72	3.50	2.95	4.84	2.83	2.48	2.09	4.21	7.70	34
063-090	5.67	4.29	5.51	4.06	3.54	5.67	2.83	2.48	2.09	4.21	8.43	42
063-110	5.67	4.29	6.10	5.02	4.33	6.59	2.83	2.48	2.09	4.21	9.33	60
063-130	5.67	4.29	6.69	5.81	5.12	7.38	2.83	2.48	2.09	4.21	9.65	119
063-150	5.67	4.29	7.87	6.69	5.91	9.06	2.83	2.48	2.09	4.21	10.83	199

- **~lb** Weight without motor

NRV - NRVpower - Dimensions

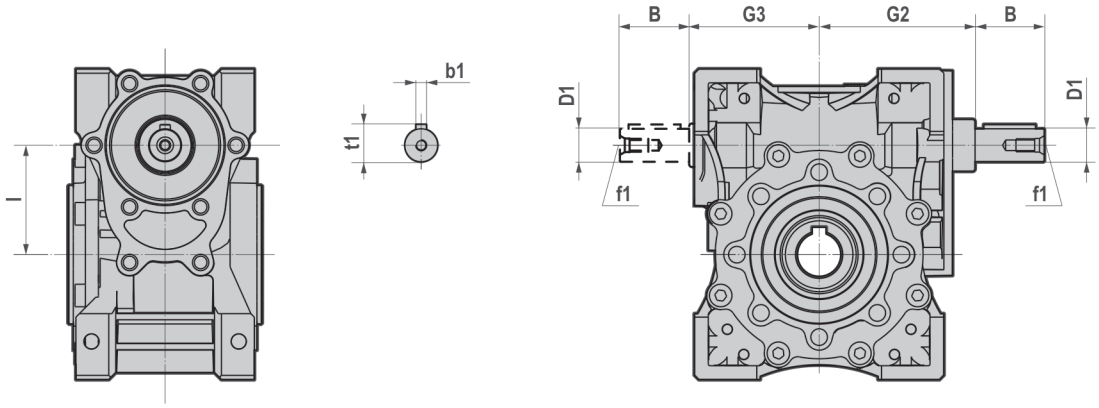

	030	040	050	063	075	090	110	130	150
B	1.181	1.181	1.575	1.969	2.362	2.362	2.756	3.150	3.150
D1	0.375	0.500	0.625	0.750	0.875	0.875	1.125	1.250	1.375
G2	2.01	2.36	2.91	3.54	4.13	4.92	5.59	6.38	7.68
G3	1.77	2.09	2.52	2.95	3.54	4.25	5.31	6.10	6.89
l	1.18	1.57	1.97	2.48	2.95	3.54	4.33	5.12	5.91
b1	0.094	0.125	0.188	0.188	0.188	0.188	0.250	0.250	0.315
f1	-	-	1/4-20	1/4-20	1/4-20	1/4-20	3/8-16	1/2-13	1/2-13
t1	0.42	0.55	0.70	0.83	0.96	0.96	1.24	1.36	1.51

D1 dimension has tolerance of +0 -0.0005

Metric input shaft options

	030	040	050	063	075	090	110	130	150
B	20 mm	23 mm	30 mm	40 mm	50 mm	50 mm	60 mm	80 mm	80 mm
D1 (j6)	9 mm	11 mm	14 mm	19 mm	24 mm	24 mm	28 mm	30 mm	35 mm
b1	3 mm	4 mm	5 mm	6 mm	8 mm	8 mm	8 mm	8 mm	10 mm
f1	-	-	M6	M6	M8	M8	M10	M10	M12
t1	10.2 mm	12.5 mm	16 mm	21.5 mm	27 mm	27 mm	31 mm	33 mm	38 mm

NRV+NMRV - NRV+NMRVpower - Dimensions

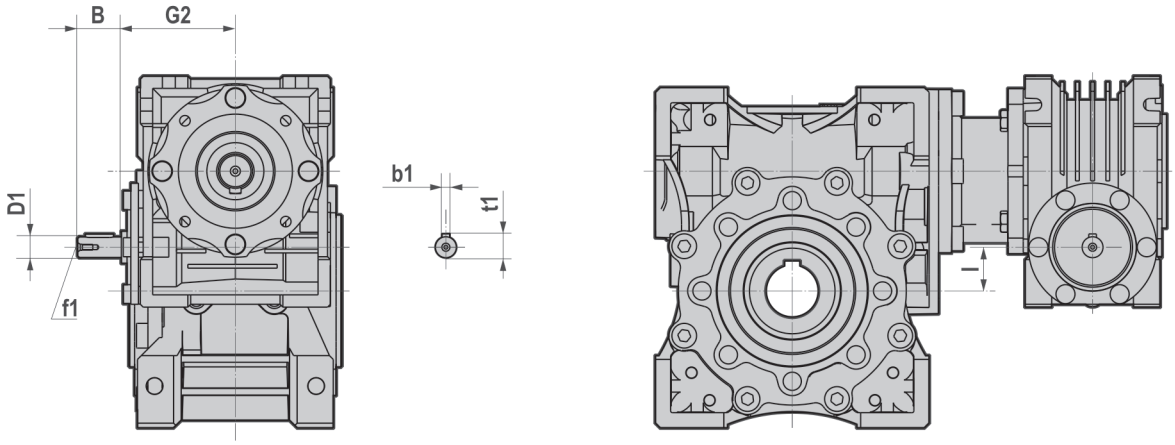

	030-040	030-050	030-063	040-050	040-063	040-075	040-090	050-090	050-110	063-110	063-130	063-150
B	1.181	1.181	1.181	1.181	1.181	1.181	1.181	1.575	1.575	1.969	1.969	1.969
D1	0.375	0.375	0.375	0.500	0.500	0.500	0.500	0.625	0.625	0.750	0.750	0.750
G2	2.01	2.01	2.01	2.36	2.36	2.36	2.36	2.91	2.91	3.54	3.54	3.54
l	0.39	0.78	1.30	0.39	0.91	1.38	1.97	1.57	2.36	1.85	2.64	3.43
b1	0.094	0.094	0.094	0.125	0.125	0.125	0.125	0.188	0.188	0.188	0.188	0.188
f1	-	-	-	-	-	-	-	1/4-20	1/4-20	1/4-20	1/4-20	1/4-20
t1	0.42	0.42	0.42	0.55	0.55	0.55	0.55	0.70	0.70	0.83	0.83	0.83

- For the missing dimensions, please consider the drawing of relevant NMRV size.

Metric input shaft options

	030-040	030-050	030-063	040-050	040-063	040-075	040-090	050-090	050-110	063-110	063-130	063-150
B	20 mm	20 mm	20 mm	23 mm	23 mm	23 mm	23 mm	30 mm	30 mm	40 mm	40 mm	40 mm
D1 (j6)	9 mm	9 mm	9 mm	11 mm	11 mm	11 mm	11 mm	14 mm	14 mm	19 mm	19 mm	19 mm
b1	3 mm	3 mm	3 mm	4 mm	4 mm	4 mm	4 mm	5 mm	5 mm	6 mm	6 mm	6 mm
f1	-	-	-	-	-	-	-	M6	M6	M6	M6	M6
t1	10.2 mm	10.2 mm	10.2 mm	12.5 mm	12.5 mm	12.5 mm	12.5 mm	16 mm	16 mm	21.5 mm	21.5 mm	21.5 mm

Electric motors

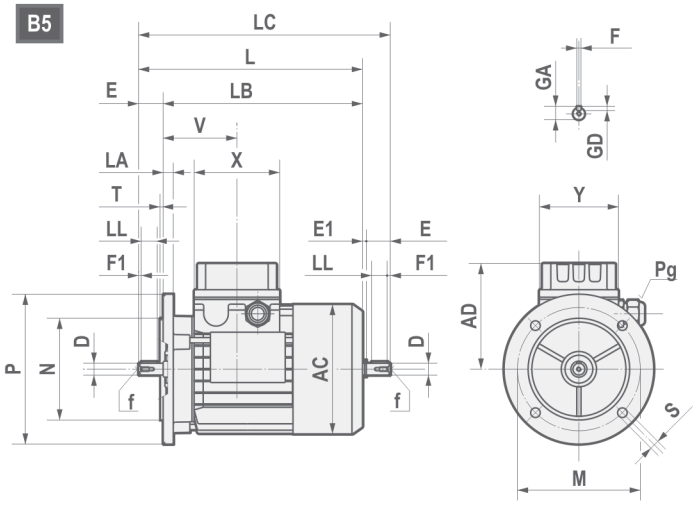

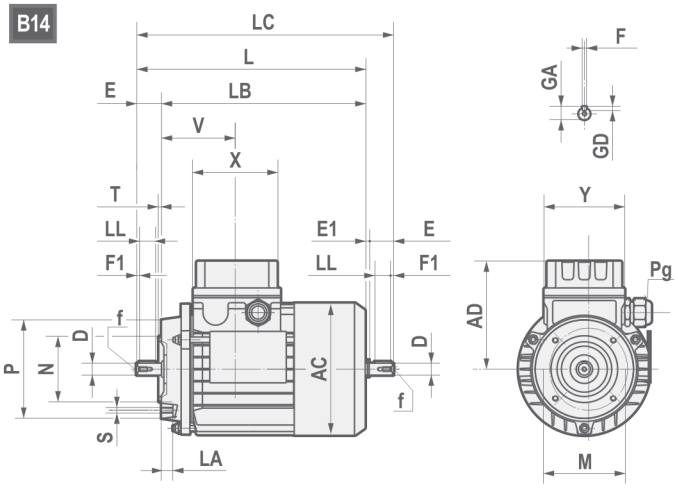

	AC	AD	L	LB	LC	X	Y	V	D	E	E1	f	F1	GA	F	GD	LL	Pg		
																			ø min	ø max
63	121	103.5	211	188	235.5	80	74	69	11 j6	23	1.5	M4x10	2.5	12.5	4	4	15	M16x1.5	5	10
71	139	112	238.5	208.5	271	80	74	74.5	14 j6	30	2.5	M5x12.5	3	16	5	5	20	M20x1.5	6	12
80	158	121.5	272.5	232.5	314	80	74	78	19 j6	40	1.5	M6x16	5	21.5	6	6	30	M20x1.5	6	12
90S	173	129.5	298	248	349.5	98	98	89.5	24 j6	50	1.5	M8x19	5	27	8	7	35	M25x1.5	13	18
90L	173	129.5	323	273	374.5	98	98	89.5	24 j6	50	1.5	M8x19	5	27	8	7	35	M25x1.5	13	18
100	191	138.5	368	308	431.5	98	98	97.5	28 j6	60	3.5	M10x22	7.5	31	8	7	45	M25x1.5	13	18
112	210.5	153.5	382.5	322.5	447	98	98	100	28 j6	60	3.5	M10x22	7.5	31	8	7	45	M25x1.5	13	18
132S	248.5	195	452	372	536.5	118	118	115.5	38 k6	80	4	M12x28	10	41	10	8	60	M32x1.5	18	25
132L	248.5	195	490	410	574.5	118	118	115.5	38 k6	80	4	M12x28	10	41	10	8	60	M32x1.5	18	25
160S	248.5	195	520	410		118	118	115.5	42 k6	100		M16x36	10	45	12	8	90	M32x1.5	18	25

B5	M	N	P	LA	S	T
63	115	95	140	10	9	3
71	130	110	160	10	9.5	3.5
80	165	130	200	12	11	3.5
90	165	130	200	12	11	3.5
100	215	180	250	15	14	4
112	215	180	250	14.5	14	4
132	265	230	300	20	14	3.5
160	300	250	350	13	18.5	3.5

B14	M	N	P	LA	S	T
63	75	60	90	10	M5	2.5
71	85	70	105	10.5	M6	2.5
80	100	80	120	10.5	M6	3
90	115	95	140	11.5	M8	3
100	130	110	160	15	M8	3.5
112	130	110	160	11.5	M8	3.5
132	165	130	200	20.5	M10	3.5

- Dimensions in mm

Electric motors

Nominal power (kW)

	63A		63B		63C		71A		71B		71C		80A		80B		80C		80D		90S		90L	
	TS	TH	TS	TH	TS	TH	TS	TH	TS	TH	TS	TH	TS	TH	TS	TH	TS	TH	TS	TH	TS	TH	TS	TH
2(*)	0.18		0.25		0.37		0.37		0.55		0.75		0.75	0.75	1.1	1.1	1.5				1.5	1.5	2.2	2.2
4(*)	0.12		0.18		0.22		0.25		0.37		0.55		0.55		0.75	0.75	0.92		1.1		1.1	1.1	1.5	1.5
6(*)	0.09		0.12		0.15		0.18		0.25		0.37		0.37		0.55		0.75				0.75		1.1	0.75
8(*)					0.07		0.09		0.12		0.18		0.18		0.25		0.37				0.37		0.55	

	90LB		100LA		100LB		112MA		112MB		132SA		132SB		132MA		132MB		132MC		160SA	
	TS	TH	TS	TH	TS	TH	TS	TH	TS	TH	TS	TH	TS	TH	TS	TH	TS	TH	TS	TH	TS	TH
2(*)			3	3	4		4	4	5.5		5.5	5.5	7.5	7.5	9.2	9.2	11				11	
4(*)	1.85		2.2	2.2	3	3	4	4	4.8		5.5	5.5			7.5	7.5	9.2		11		11	
6(*)			1.5	1.1	1.85	1.5	2.2	2.2	3		3	3			4	4	5.5	5.5				
8(*)			0.75		1.1		1.5				2.2				3							

(*) Poles

Nominal power (HP)

	63A		63B		63C		71A		71B		71C		80A		80B		80C		80D		90S		90L	
	TS	TH	TS	TH	TS	TH	TS	TH	TS	TH	TS	TH	TS	TH	TS	TH	TS	TH	TS	TH	TS	TH	TS	TH
2(*)	0.24		0.34		0.5		0.5		0.75		1		1	1	1.5	1.5	2				2	2	3	3
4(*)	0.16		0.24		0.3		0.34		0.5		0.75		0.75		1	1	1.25		1.5		1.5	1.5	2	2
6(*)	0.12		0.16		0.2		0.24		0.34		0.5		0.5		0.75		1				1		1.5	1
8(*)					0.1		0.12		0.16		0.24		0.24		0.34		0.5				0.5		0.7	

	90LB		100LA		100LB		112MA		112MB		132SA		132SB		132MA		132MB		132MC		160SA	
	TS	TH	TS	TH	TS	TH	TS	TH	TS	TH	TS	TH	TS	TH	TS	TH	TS	TH	TS	TH	TS	TH
2(*)			4	4	5.4		5.4	5.4	7.5		7.5	7.5	10	10	12.5	12.5	15				15	
4(*)	2.5		3	3	4	4	5.4	5.4	6.5		7.5	7.5			10	10	12.5		15		15	
6(*)			2	1.5	2.5	2	3	3	4		4	4			5.4	5.4	7.5	7.5				
8(*)			1		1.5		2				3				4							

(*) Poles

Input flange - Dimensions

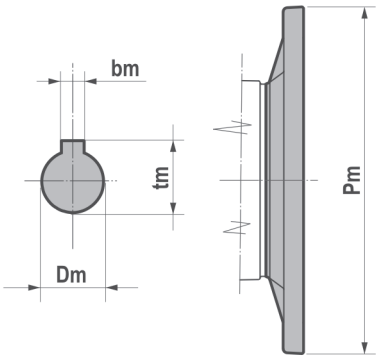

B5	IEC								
	056	063	071	080	090	100	112	132	160
Pm	120 mm	140 mm	160 mm	200 mm	200 mm	250 mm	250 mm	300 mm	350 mm
Dm	9 mm	11 mm	14 mm	19 mm	24 mm	28 mm	28 mm	38 mm	42 mm
bm	3 mm	4 mm	5 mm	6 mm	8 mm	8 mm	8 mm	10 mm	12 mm
tm	10.4 mm	12.8 mm	16.3 mm	21.8 mm	27.3 mm	31.3 mm	31.3 mm	41.3 mm	45.3 mm

B14	IEC						
	056	063	071	080	090	100	112
Pm	80 mm	90 mm	105 mm	120 mm	140 mm	160 mm	160 mm
Dm	9 mm	11 mm	14 mm	19 mm	24 mm	28 mm	28 mm
bm	3 mm	4 mm	5 mm	6 mm	8 mm	8 mm	8 mm
tm	10.4 mm	12.8 mm	16.3 mm	21.8 mm	27.3 mm	31.3 mm	31.3 mm

B14	NEMA			
	48C	56C	140TC	180TC
Pm	5.625	6.500	6.500	9.000
Dm	0.500	0.625	0.875	1.125
bm	0.1250	0.1875	0.1875	0.2500
tm	0.56	0.71	0.97	1.24

Position of terminal box

NMRV - NMRVpower

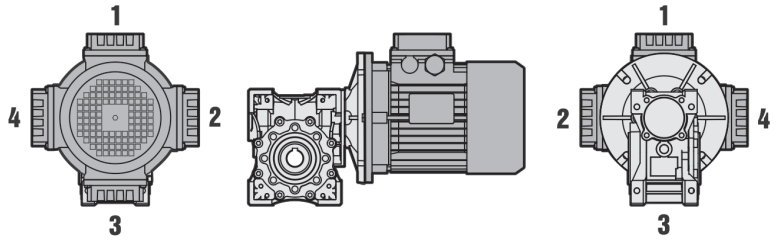

HA31

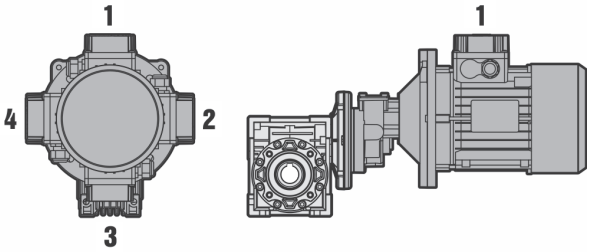

- In the case of specific requirements, when ordering, specify the position of the terminal box as shown in the diagram.
- Terminal box position always refers to HA31 position.

Output flange

K	J
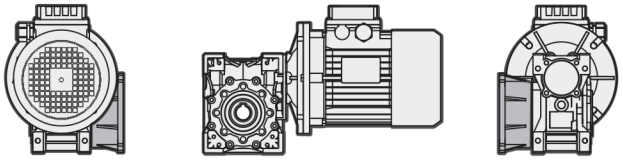	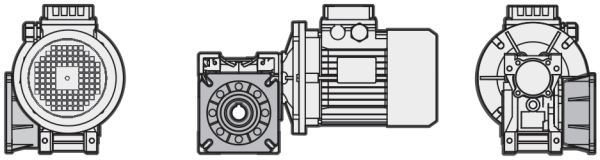

- Unless specified otherwise, the gear reducer is supplied with the flange in pos. J referred to position B3.

Cover

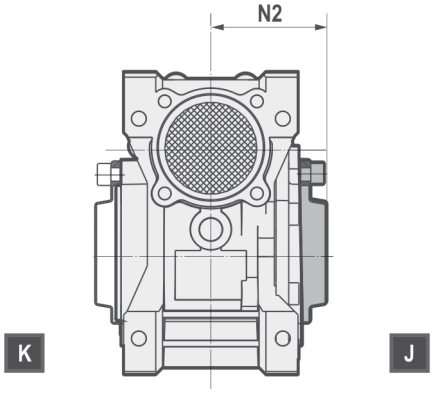

	N2
030	1.65
040	1.97
050	2.26
063	2.70
075	2.89
090	3.37
105	3.70
110	3.70
130	4.02
150	4.61

Low speed shafts

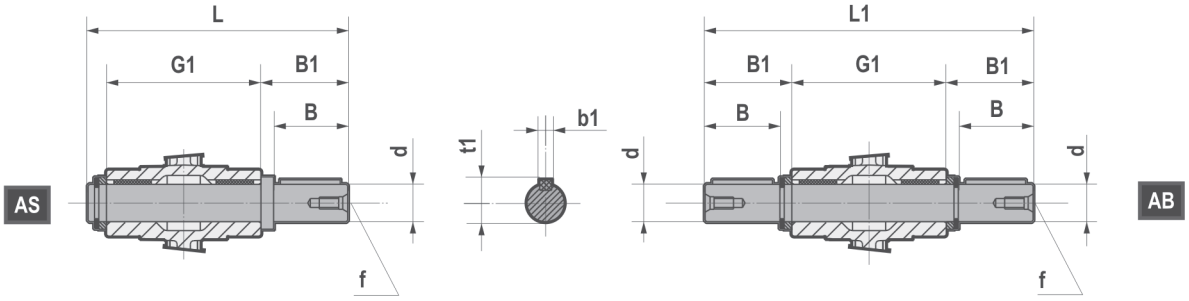

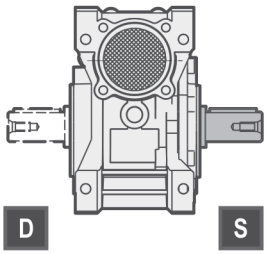

	d		B	B1	G1	L	L1	f	b1	t1
025	0.500	+0 -0.001	0.90	1.00	1.97	3.19	-	-	0.125	0.55
030	0.625	+0 -0.001	1.57	1.67	2.48	4.41	5.82	1/4-20	0.188	0.70
040	0.750	+0 -0.001	1.97	2.09	3.07	5.43	7.25	1/4-20	0.188	0.83
050	1	+0 -0.001	1.97	2.11	3.62	6.02	7.84	3/8-16	0.250	1.11
063	1.125	+0 -0.001	2.36	2.50	4.41	7.20	9.41	3/8-16	0.250	1.23
075	1.250	+0 -0.001	2.76	2.89	4.72	7.56	10.51	1/2-13	0.250	1.36
090	1.375	+0 -0.001	3.15	3.33	5.51	9.21	12.13	1/2-13	0.3125	1.51
110	1.625	+0 -0.001	3.54	3.72	6.10	9.80	13.54	5/8-11	0.375	1.79
130	1.750	+0 -0.001	3.54	3.72	6.69	10.43	14.17	5/8-11	0.375	1.92
150	2.000	+0 -0.001	3.94	4.13	7.87	11.69	16.14	3/4-10	0.500	2.22

Metric input shaft options

	d		B	B1	G1	L	L1	f	b1	t1
025	11 mm	h6	23 mm	25.5 mm	50 mm	81 mm	101 mm	-	4 mm	12.5 mm
030	14 mm	h6	30 mm	32.5 mm	63 mm	102 mm	128 mm	M6	5 mm	16 mm
040	18 mm	h6	40 mm	43 mm	78 mm	128 mm	164 mm	M6	6 mm	20.5 mm
050	25 mm	h6	50 mm	53.5 mm	92 mm	153 mm	199 mm	M10	8 mm	28 mm
063	25 mm	h6	50 mm	53.5 mm	112 mm	173 mm	219 mm	M10	8 mm	28 mm
075	28 mm	h6	60 mm	63.5 mm	120 mm	192 mm	247 mm	M10	8 mm	31 mm
090	35 mm	h6	80 mm	84.5 mm	140 mm	234 mm	309 mm	M12	10 mm	38 mm
110	42 mm	h6	80 mm	84.5 mm	155 mm	249 mm	324 mm	M16	12 mm	45 mm
130	45 mm	h6	80 mm	85 mm	170 mm	265 mm	340 mm	M16	14 mm	48.5 mm
150	50 mm	h6	82 mm	87 mm	200 mm	297 mm	374 mm	M16	14 mm	53.5 mm

Machine axis

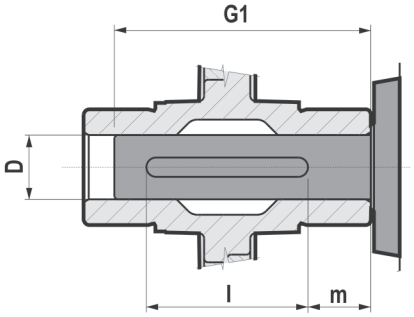

	D		G1 *	l *	m *
025	Ø11	H8/g6	45	30	7.5
030	Ø14	H8/h6	55	40	7.5
040	Ø18 (19)	H8/h6	70	50	10
050	Ø25 (24)	H8/h6	80	55	12.5
063	Ø25 (28)	H8/h6	100	70	15
075	Ø28 (30) (32) (35)	H8/h6	105	75	15
090	Ø35 (38) (40)	H8/h6	120	80	20
105	Ø42	H8/h6	135	95	20
110	Ø42	H8/h6	135	95	20
130	Ø45	H8/h6	145	100	22.5
150	Ø50	H8/h6	175	130	22.5

- Dimensions are in mm

(*) Suggested Values

Torque arm

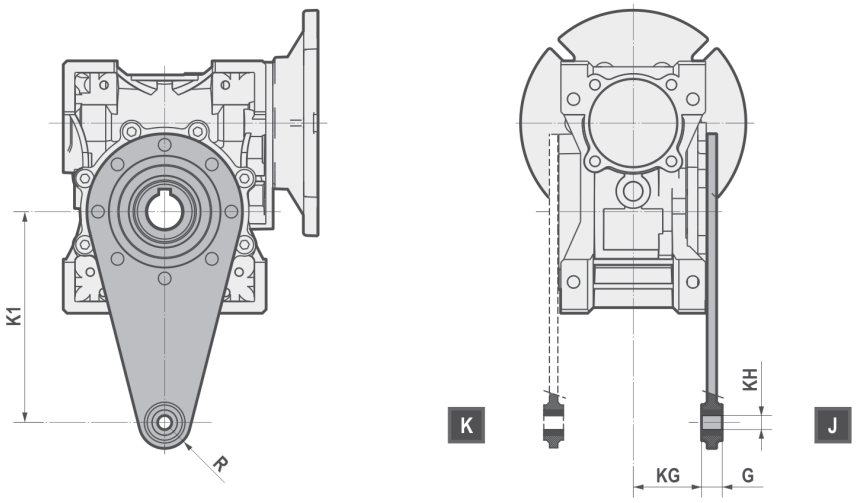

	025	030	040	050	063	075	090	110	130	150
K1	2.76	3.35	3.94	3.94	5.91	7.87	7.87	9.84	9.84	9.84
G	0.55	0.55	0.55	0.55	0.55	0.98	0.98	1.18	1.18	1.18
KG	0.69	0.94	1.24	1.52	1.93	1.87	2.26	2.44	2.72	3.31
KH	0.31	0.31	0.39	0.39	0.39	0.79	0.79	0.98	0.98	0.98
R	0.59	0.59	0.71	0.71	0.71	1.18	1.18	1.38	1.38	1.38

NMRV-NMRL Torque Arm - Mounting Position

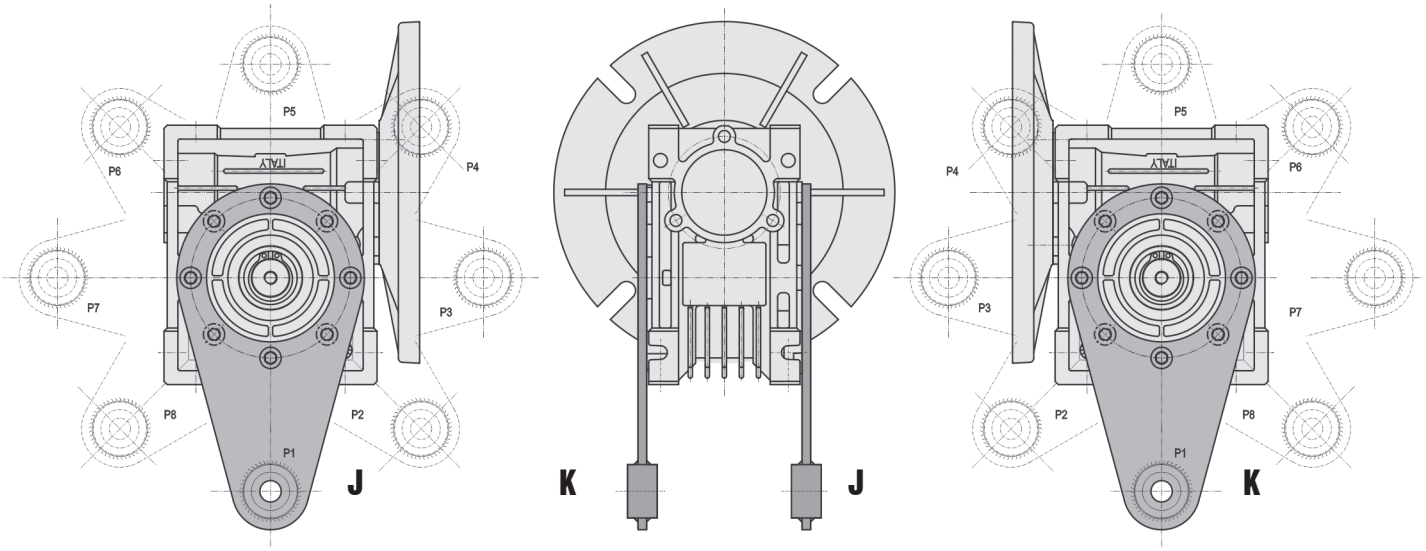

NMRV-NMRVP NMRL	P1		P2		P3		P4		P5		P6		P7		P8	
	J	K	J	K	J	K	J	K	J	K	J	K	J	K	J	K
025			/	/	NO	NO	/	/			/	/			/	/
030			NO	NO	NO	NO	NO	NO								
040	NO NMRL		NO	NO	NO	NO	NO	NO	NO NMRL		NO NMRL		NO NMRL		NO NMRL	
050			NO	NO	NO	NO	NO	NO			NO	NO				
063					NO	NO	NO	NO								
075			NO	NO	NO	NO	NO	NO								
090					NO	NO	NO	NO								
110					NO	NO	NO	NO								
130					NO	NO	NO	NO								
150			NO	NO	NO	NO	NO	NO	NO	NO	NO	NO			NO	NO

- For information on torque arm mounting positions on combined worm gear reducers and worm gear reducers with pre-stage units, please contact TECHNICAL SERVICE.

NRV-NRL Torque Arm - Mounting Position

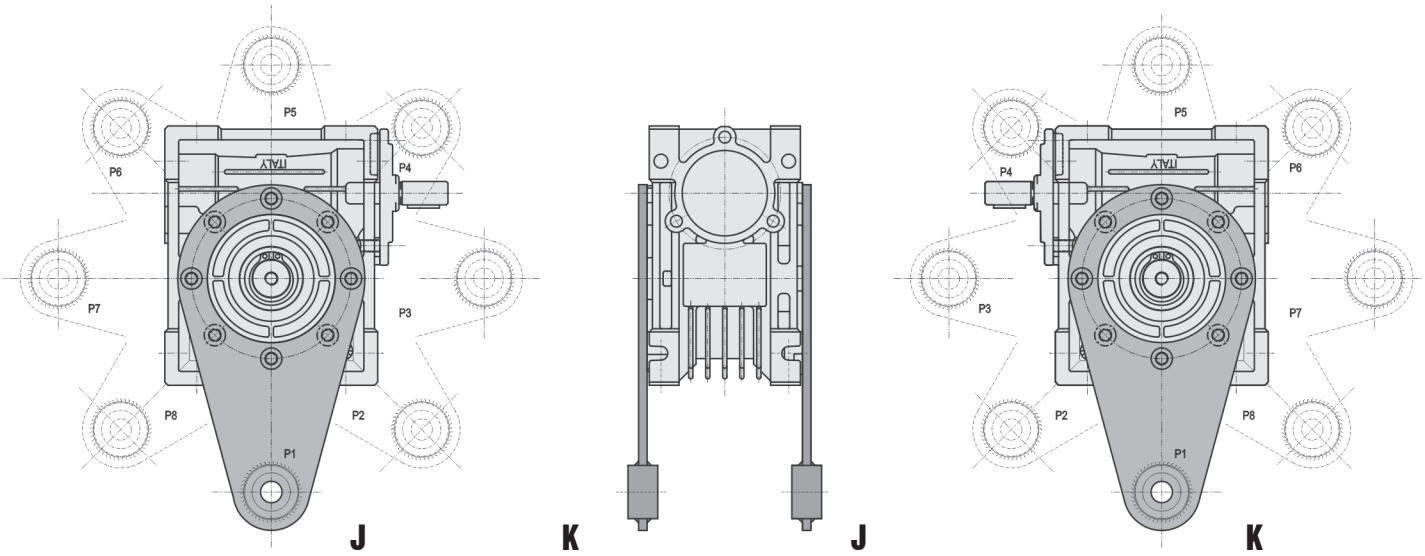

NRV-NRVP NRL	P1		P2		P3		P4		P5		P6		P7		P8	
	J	K	J	K	J	K	J	K	J	K	J	K	J	K	J	K
030			NO	NO			NO	NO								
040	NO NRL		NO NRL	NO	NO NRL	NO	NO	NO	NO NRL		NO NRL		NO NRL		NO NRL	
050			NO	NO			NO	NO			NO	NO				
063							NO	NO								
075							NO	NO								
090							NO	NO								
110							NO	NO								
130							NO	NO								
150			NO	NO			NO	NO	NO	NO	NO	NO			NO	NO

- For information on torque arm mounting positions on combined worm gear reducers and worm gear reducers with pre-stage units, please contact TECHNICAL SERVICE.

NMRL - NMRV-P - Dimensions

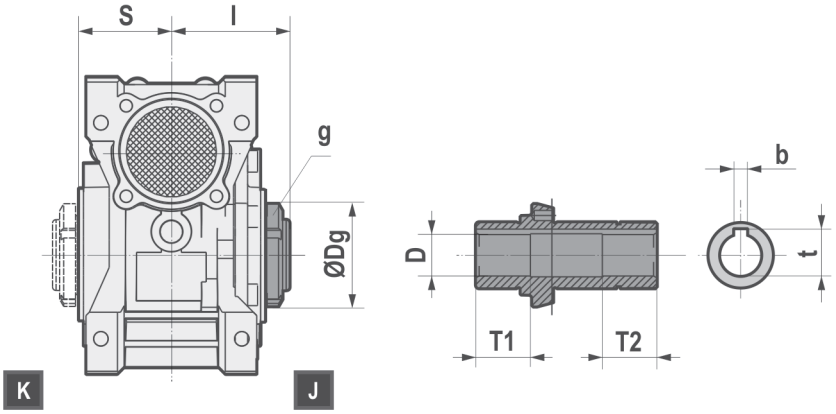

	050	063	075	090
l	2.50	2.91	3.09	3.52
S	1.81	2.20	2.36	2.76
Dg	2.20	2.44	2.68	3.15
g	M40x1.5	M45x1.5	M50x1.5	M60x2
b	8 mm	8 mm	8 mm	10 mm
t	28.3 mm	28.3 mm	31.3 mm	38.3 mm
D	Ø25 mm	Ø25 mm	Ø28 mm	Ø35 mm
T1	1.30	1.46	1.57	1.77
T2	1.30	1.46	1.57	1.77

- The torque limiter is available for worm gearbox type NMRL 050 in J position only.
- The MTV torque limiter is univocally supplied for every gear unit with the hollow output shaft diameter equal to dimension D shown in the table. Different diameters could be provided upon request, after technical and manufacturing control.
- Upon request it's possible to assemble an output solid shaft kit, different from the standard one available in the Catalogue.

NMRL / NMRL-P

Description
The torque limiter is a mechanical device designed to protect the transmission from movement caused by accidental overloads or irregularities. It is applied to the output of the worm gear reducers and it works as an internal friction applied on the output shaft, which can be adjusted manually through an external locking ring nut.

Compared to electronic or external mechanical devices, this solution presents the following advantages:
- limited additional dimensions compared to the version without the torque limiter;
- hollow output shaft without changes in terms of diameter compared to the standard version;
- quick action directly on the transmission that must be protected;
- it has been designed for oil-bath operation, therefore wear-free and reliable;
- manual adjustment of the slip torque;
- over the slip torque, the torque limiter is still "on hold", ensuring the automatic machine restart without external intervention;
- using the torque limiter, it 's possible also to rotate the gearbox shaft by loosening the external locking ring nut, for example in case of mechanical locks due to worm irreversibility.

The torque limiter device must to be installed as a protection system for accidental events and not as protection of wrong gearbox selection *(for example after selecting a gearbox with a low service factor compared with the real needs of the application).*

The torque limiter is available for worm gear reducers type NMRL 050 / NMRL-P 063-075-090 and it is applicable in all combined unit configurations provided in the catalogue, usually on the last gearbox. The torque limiter is supplied on the gearbox output shaft in J or K position.

Operating principle
In this mechanical device the transmission of movement takes place by means of friction between the driving surface (input shaft (10)) and the driven surface (wormwheel (9)). These are subject of a determined compression created by the plate (7) which is generated by two belleville washers (6), arranged in series. The belleville washers action is generated by the bushing (3), driven by the external locking ring nut (1) which is screwed on the output shaft. The shift is guaranteed by the connection between the two conical elements of the hub (2) and the worm wheel. The transmission of movement has a standard operation up to a maximum admissible torque value (slip torque); over this value the torque limiter starts to work generating a slip between the worm wheel, which continues to spin conducted by the input shaft, and the hub which remains still. Over the slip torque expected from the regulation, the torque limiter is still "on hold": it transmits the set value and it doesn't transmit higher values. This ensures to the machine to restart automatically without external action. For safety reasons it isn't recommended to install this device in lifting equipment: in case of overloads or irregularities, during the shift, the weight could not be maintained in suspension.

NMRL / NMRL-P

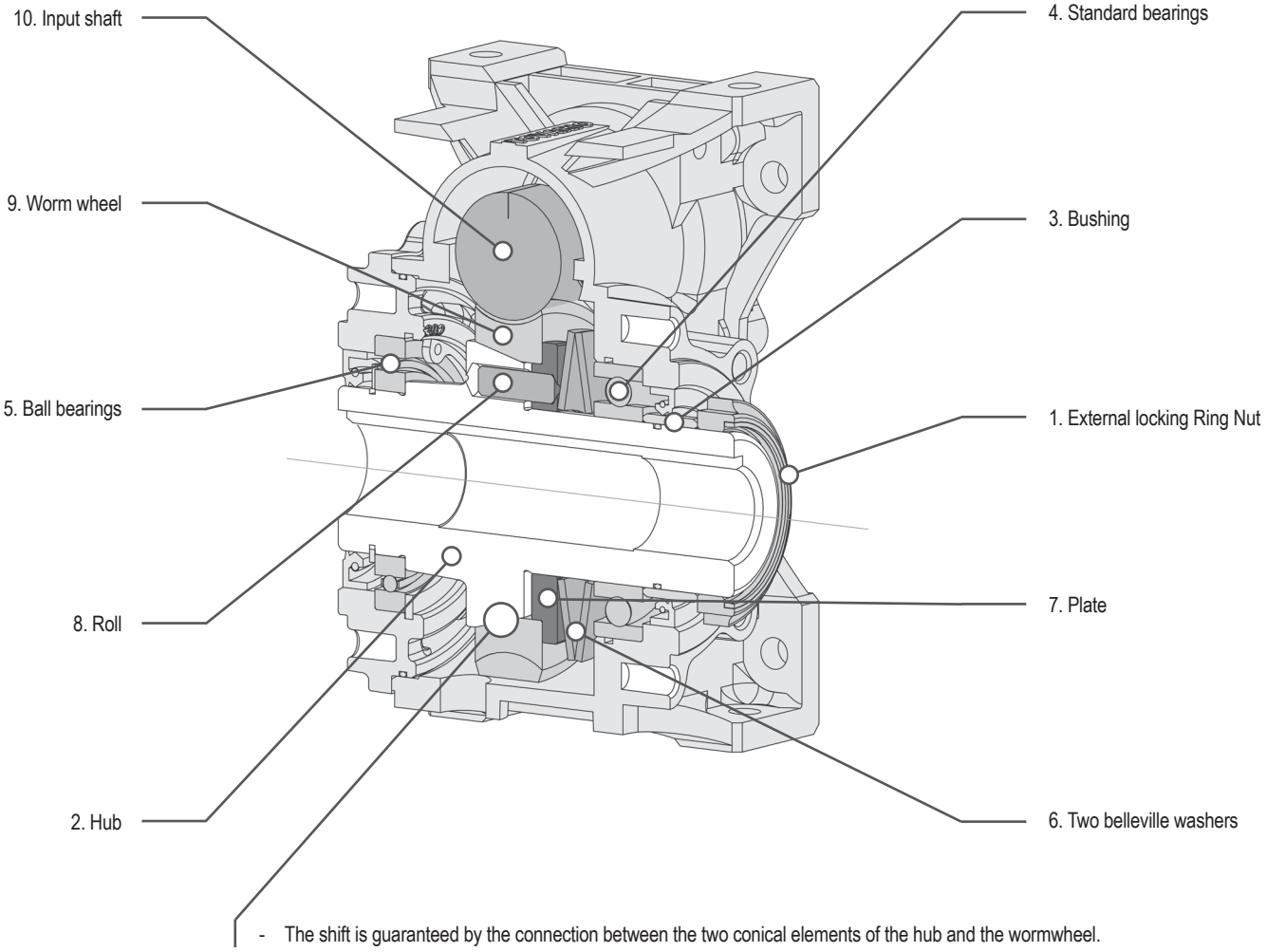

Slip torque setting
A slip torque setting is easily adjustable from the outside through the rotation of the locking ring nut, characterized by 4 marks to define the number of turns (each mark is equivalent to ¼ of a turn). The device is preliminary set during the assembly phase.

	Ring nut rotation
050	1/2 (*)
063	3/4 (*)
075	1 (*)
090	1 (*)

(*) turn

The following factors may affect the setting: temperature and period of adjustment. It is therefore recommended, during the installation, to actually verify the slip torque limit, in according to the real needs of the application.

The standard direction of rotation for the registration of the ring nut is clockwise. Looking frontally from the ring nut side, the torque limiter is in J position when the motor position is on the right side; with the motor on left side the torque limiter is in K position.

IMP: *It's recommended for long stops, even if the machine restarts automatically, to return the ring nut to its original position and to set it again.*

As previously mentioned, for each reducers size (050-063-075-090) the slip torque range depends by the ratio and the direction of rotation of the gearbox, which affects the tolerances between the two conical components that generate the slip (there is an axial component which tends to approach or move their away).
Therefore in the setting diagrams are shown two lines which represent the approximate limits within the provided slip torque could change.
The slip torque setting must be always checked afterward to determine if the number of turns of the ring nut guarantees the desired slip torque value.

NMRL / NMRL-P

Adjustment graphs

IMP: the values (¼, ½, ¾, 1, 1¼ ...) correspond to the center of the column.

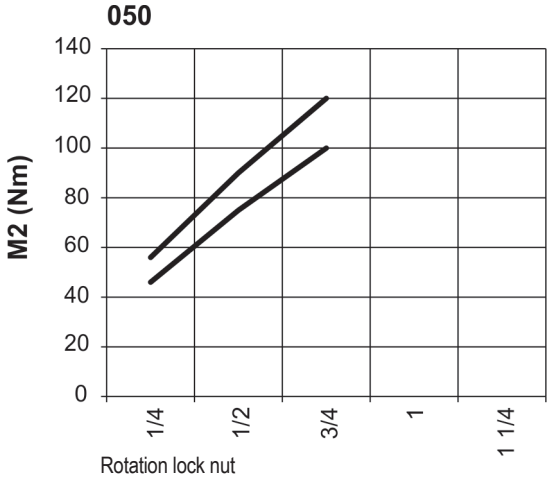

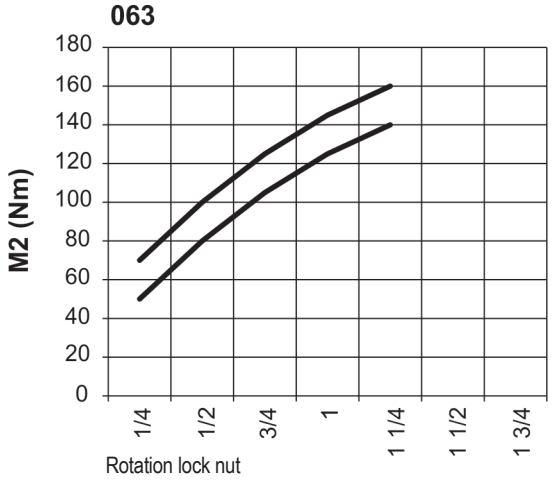

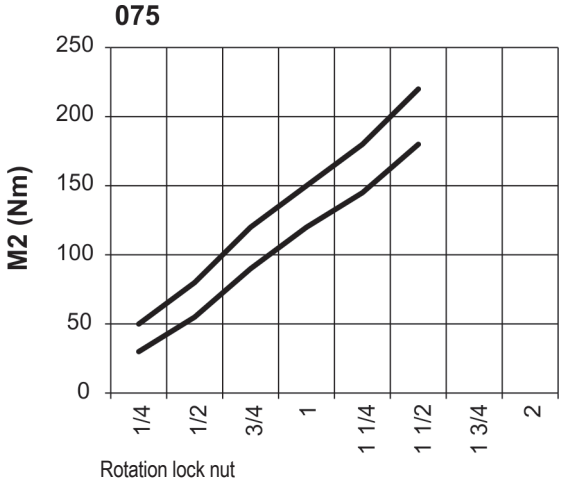

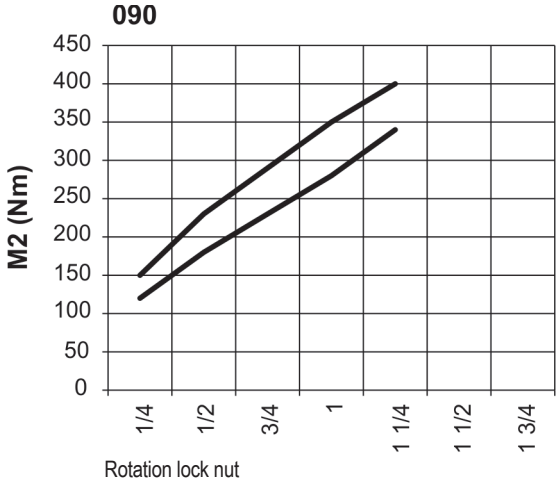

SALES CONDITIONS

All supplies effected by Motovario Group are governed exclusively by the general terms of sale that you can find on our website:

http://www.motovario.com/eng/corporate/sales-conditions

NOTES

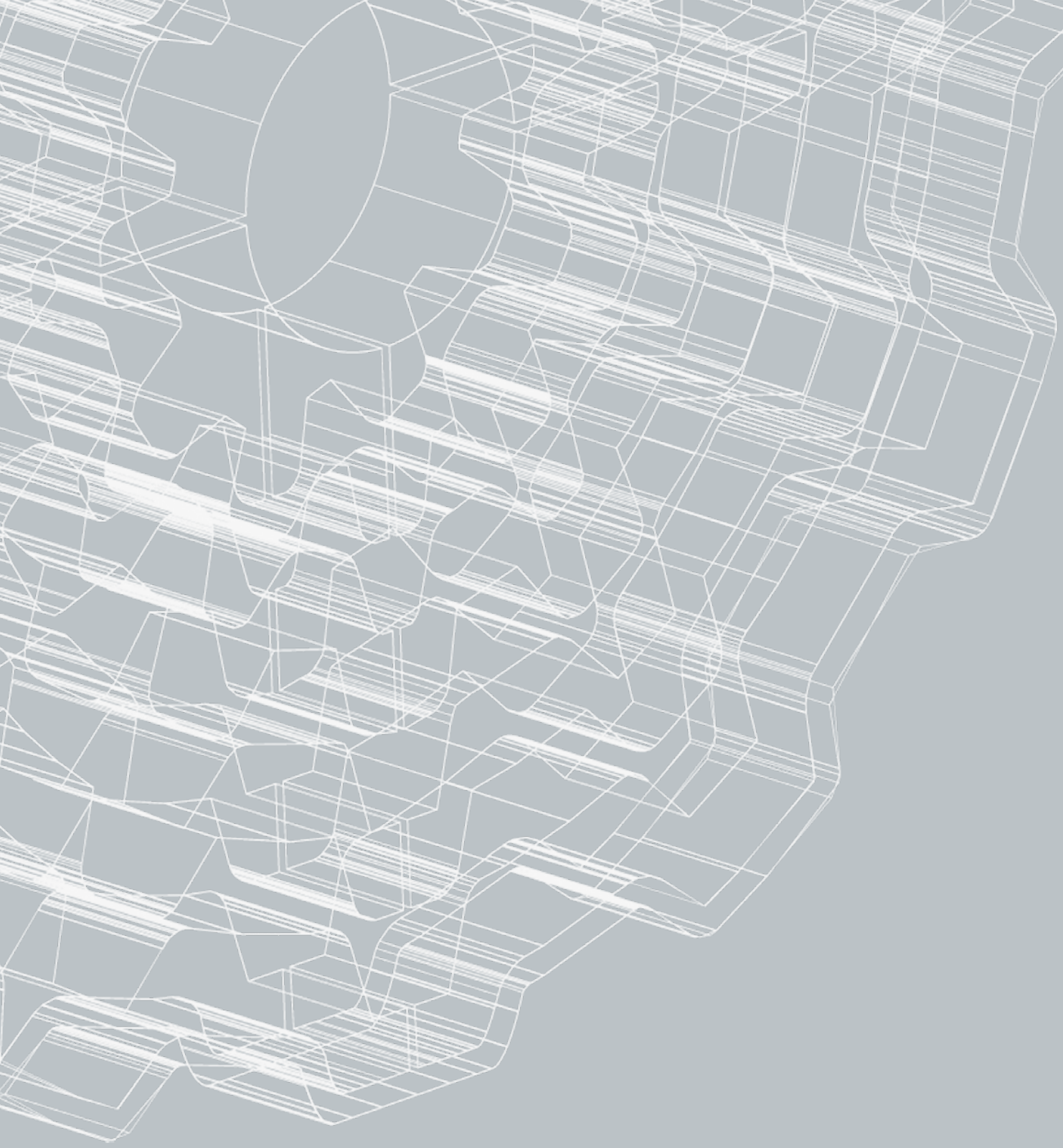

VSF GB / 2016 / REV. 0

rscadv.it

www.motovario.com