CATALOGO TECNICO

B SERIES

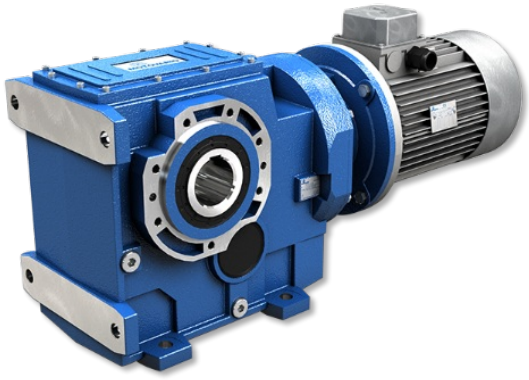

# MOTORIDUTTORI **ORTOGONALI**

## STANDARD **IEC**

MOTOVARIO®
HEART OF MOTION
a TECO Group company

# INDICE



## 1. INFORMAZIONI GENERALI


**1.1 SIMBOLOGIA E FORMULE** ..... **5**
1.1.1 Simbologia ..... **5**
1.1.2 Formule ..... **6**
**1.2 SELEZIONE DEL PRODOTTO** ..... **7**
**1.3 FATTORE DI SERVIZIO** ..... **9**
**1.4 INSTALLAZIONE** ..... **10**


## 2. INFORMAZIONI DI PRODOTTO


**2.1 CARATTERISTICHE COSTRUTTIVE** ..... **11**
**2.2 TIPOLOGIA** ..... **12**
2.2.1 Designazione ..... **12**
2.2.2 Versioni ..... **13**
2.2.3 Modularità ..... **16**
**2.3 POSIZIONI DI MONTAGGIO** ..... **19**
**2.4 POSIZIONE MORSETTIERA** ..... **20**
**2.5 POTENZA TERMICA** ..... **21**
2.5.1 Informazioni ..... **21**
2.5.2 Verifica ..... **21**
**2.6 SENSO DI ROTAZIONE** ..... **23**
**2.7 APPLICAZIONI CRITICHE** ..... **24**
2.7.1 Applicazioni critiche ..... **24**
2.7.2 Informazioni ..... **25**
**2.8 DISPONIBILITÀ FLANGE ATTACCO MOTORE** ..... **26**
2.8.1 Disponibilità flange attacco motore BA ..... **26**
2.8.2 Disponibilità flange attacco motore B ..... **27**
**2.9 CUSCINETTI ASSE LENTO** ..... **34**
**2.10 CARICHI RADIALI** ..... **35**
2.10.1 Informazioni ..... **35**
2.10.2 Entrata ..... **35**

# INDICE




2.10.3 Uscita ..... 37

**2.11 LUBRIFICAZIONE** ..... 38

2.11.1 Informazioni ..... 38

2.11.2 Lubrificanti ..... 38

2.11.3 Lubrificanti speciali ..... 39

2.11.4 Quantità ..... 39

**2.12 MOMENTI D'INERZIA** ..... 41


## 3. DIMENSIONI


**3.1 RIDUTTORI/MOTORIDUTTORI** ..... 42

3.1.1 BA.2 ..... 42

3.1.2 BA.3 ..... 44

3.1.3 CBA.2 ..... 44

3.1.4 CBA.3 ..... 46

3.1.5 IBA.2 ..... 48

3.1.6 IBA.3 ..... 49

3.1.7 B ..... 51

3.1.8 CB ..... 53

3.1.9 IB ..... 54

**3.2 FLANGE DI ENTRATA** ..... 57

**3.3 MOTORI ELETTRICI** ..... 58

3.3.1 Motori elettrici ..... 58

3.3.2 Potenza nominale - kW ..... 61

**3.4 PESI** ..... 62

**3.5 DIMENSIONALI LINGUETTE** ..... 64


## 4. ACCESSORI & OPZIONI


**4.1 ALBERI LENTI** ..... 65

**4.2 FLANGIA USCITA** ..... 66

4.2.1 Informazioni ..... 66

4.2.2 BA ..... 66

4.2.3 B ..... **68**

**4.3 BRACCIO DI REAZIONE** ..... **70**

4.3.1 Posizioni di montaggio - BA40 ..... **70**

4.3.2 Posizioni di montaggio - BA50 ..... **70**

4.3.3 Posizioni di montaggio - BA70 ..... **71**

4.3.4 Posizioni di montaggio - B ..... **71**

4.3.5 Dimensioni - BA40-50-70 / B063-083-103-123 ..... **73**

4.3.6 Dimensioni - B143-153-163 ..... **73**

**4.4 COPERCHIO DI PROTEZIONE ASSE LENTO** ..... **75**

**4.5 DISPOSITIVO ANTIRETRO** ..... **76**

**4.6 ALBERO LENTO CAVO CON CALETTATORE** ..... **78**

**4.7 TENUTE RINFORZATE ASSE LENTO** ..... **79**

**4.8 KIT MONTAGGIO/SMONTAGGIO** ..... **80**

## 5. PRESTAZIONALI

**5.1 B/BA MOTORIDUTTORE (50Hz)** ..... **81**

**5.2 IB/IBA RIDUTTORE - 1750 RPM** ..... **264**

**5.3 IB/IBA RIDUTTORE - 1400 RPM** ..... **272**

**5.4 IB/IBA RIDUTTORE - 1140 RPM** ..... **280**

**5.5 IB/IBA RIDUTTORE - 900 RPM** ..... **288**

**5.6 IB/IBA RIDUTTORE - 700 RPM** ..... **296**

**5.7 IB/IBA RIDUTTORE - 500 RPM** ..... **304**

## 6. CONDIZIONI DI VENDITA

**6.1 CONDIZIONI DI VENDITA** ..... **312**

# 1.1 SIMBOLOGIA E FORMULE



## 1.1.1 Simbologia

| | | Ingresso | Uscita |
|---|---|---|---|
| P | Potenza (kW) | P1 | P2 |
| Pr | Potenza richiesta (kW) | Pr1 | Pr2 |
| Pn | Potenza nominale (kW) | Pn1 | Pn2 |
| M | Momento torcente (Nm) | M1 | M2 |
| Mn | Momento torcente nominale (Nm) | | $Mn_2$ |
| Mr | Momento torcente richiesto (Nm) | Mr1 | Mr2 |
| n | Numero giri (giri/1') | n1 | n2 |
| F | Forza (N) | | |
| Fr | Forza radiale | Fr1 | Fr2 |
| Fa | Forza assiale | Fa1 | Fa2 |
| i | Rapporto di riduzione | | |
| ηd | Rendimento dinamico | | |
| f.s. | Fattore di servizio | | |
| s | Statico | | |
| d | Dinamico | | |
| c | Calcolato | | |
| max | Massimo | | |
| min | Minimo | | |

## 1.1.2 Formule

| RIDUTTORE | | |
|---|---|---|
| Tempo di avviamento o arresto | $t = v / a$ | [s] |
| Velocità di rotazione | $v = \pi * d * n / 60$<br>$v = w * r$ | [m/s] |
| Velocità angolare | $n = 60 * v / (\pi * d)$<br>$\omega = v / r$ | [min-1]<br>o [rpm]<br>[rad/s] |
| Accelerazione o decelerazione | $a = v / t$ | [m/s$^2$] |
| Accelerazione angolare | $\alpha = n / (9{,}55 * t)$<br>$\alpha = \omega / t$ | [rad/s$^2$] |
| Spazio (in funzione di una accelerazione o di una velocità iniziale o finale) | $s = a * t^2 / 2$<br>$s = v * t / 2$ | [m] |
| Forza di traslazione su piano orizzontale | $F = \mu * m * g$ | [N] |
| Forza di traslazione su piano verticale (sollevamento) | $F = m * g$ | |
| Forza di traslazione su piano inclinato | $F = m * g (\mu * \cos\beta + \mathrm{sen}\beta)$ | |
| m= massa [kg]; g= accelerazione gravitazionale [m/s $^2$]; $\mu$= coefficiente di attrito; $\beta$= angolo di inclinazione | | |
| Momento di inerzia | $J = m * v^2 / \omega^2$ | [kgm$^2$] |
| Momento torcente | $M = F * d / 2$<br>$M = J * \omega / t$ | [Nm] |

| MOTORE e MOTORIDUTTORE | | |
|---|---|---|
| Tempo di accelerazione | ta= (Jext+Jm)*nn/9,55+(Ms-Mr) | [s] |
| Tempo di frenatura | ts= (Jext+Jm)*nn/9,55+(Ms+Mr) | [s] |
| Angolo di rotazione del motore in accelerazione | $\varphi = n_n * ta / 19{,}1$ | [rad] |
| Angolo di rotazione del motore in frenatura | $\varphi = n_n * ts / 19{,}1$ | [rad] |
| Potenza resa all'albero di un motore monofase | $P = V * I * \eta * \cos\omega$ | [W] |
| Potenza resa all'albero di un motore trifase | $P = 1{,}73 * V * I * \eta * \cos\omega$ | [W] |

| FUNZIONAMENTO a 60Hz | | |
|---|---|---|
| Velocità angolare a 60Hz | $n_{60Hz} = 1{,}2 * n_{50Hz}$ | [rpm] |
| Potenza a 60Hz | $P1_{60Hz} = P1_{50Hz} * V_{60Hz}/V_{50Hz}$ | [kW] |
| Se la tensione di alimentazione $V_{60Hz}$ è uguale a quella di avvolgimento $V_{50Hz}$, la potenza non varia ovvero $P1_{60Hz} = P1_{50Hz}$<br><br>Se la tensione di alimentazione $V_{60Hz}$ è maggiore del 20% di quella di avvolgimento $V_{50Hz}$, la potenza aumenta del 20% ovvero $P1_{60Hz} = 1{,}2\ P1_{50Hz}$ | | |
| Momento torcente a 60Hz | $M_{60hz} = M_{50Hz} * P1_{60Hz} / (1{,}2 * P1_{50Hz})$ | [Nm] |
| Fattore di servizio a 60Hz | $f.s._{60Hz} = f.s._{50Hz} * 1{,}175 * P1_{50Hz} / P1_{60Hz}$ | - |

# 1.2 SELEZIONE DEL PRODOTTO



Per la corretta selezione di un riduttore o di un motoriduttore occorre disporre di alcuni dati fondamentali quali:

A. La velocità angolare in entrata al riduttore **(n1)** e la velocità angolare in uscita **(n2)**. Attraverso questi due valori è possibile calcolare il rapporto di riduzione **(i)** del riduttore attraverso la formula: **i=n1/n2**
B. Il momento torcente richiesto dall'applicazione **(Mr2)**

Noti questi dati si può procedere alla selezione del motoriduttore o del riduttore.

Questa guida conduce alla selezione del prodotto attraverso pochi passi:

**Selezione dei motoriduttori**

1. Determinare il fattore di servizio effettivo dell'applicazione **(f.s.)**. Questo parametro è funzione del tipo di carico della macchina azionata, del numero di azionamenti per ora e del numero di ore di funzionamento (vedi paragrafo "Fattore di servizio").
2. Ricavare la potenza in entrata **Pr1** mediante il momento torcente richiesto **Mr2**, la velocità **n2** e il rendimento dinamico. **Pr1=(Mr2*n2)/(9550*ηd).** Il valore di rendimento dinamico dipende dalla tipologia del riduttore e dal numero di stadi d'ingranaggi di riduzione (per ricavare il valore di rendimento vedi relativa pagina).
3. Consultare le tabelle delle prestazioni dei motoriduttori ricercando una potenza normalizzata **Pn1** superiore a quella richiesta **Pr1** tale che: **Pn1≥Pr1**
4. Individuata la potenza nominale idonea, selezionare dunque il motoriduttore in grado di sviluppare la velocità angolare più vicina a quella n2 desiderata e con fattore di servizio f.s. maggiore o uguale a quello richiesto dall'applicazione.

Nelle tabelle di selezione dei motoriduttori gli abbinamenti sono realizzati con motori 2,4,6 poli alimentati a 50Hz.

**Selezione dei riduttori:**

1. Determinare il fattore di servizio dell'applicazione **(f.s.)** (vedi paragrafo "Fattore di servizio").
2. Calcolare il rapporto di riduzione i dalla velocità in uscita **n2** richiesta e dalla quella in entrata **n1**. **i=n1/n2**
3. Calcolare il momento torcente **Mc2** per la selezione del riduttore attraverso la coppia richiesta dall'applicazione **Mr2** ed il fattore di servizio f.s.: **Mc2=Mr2*(f.s.)**
4. Consultare le tabelle delle Prestazioni dei Riduttori cercando il riduttore che, col rapporto di riduzione più prossimo a quello calcolato, dispone di una coppia nominale **M2** tale che: **M2≥Mc2**

**Verifiche**
Eseguita la selezione del riduttore o del motoriduttore è opportuno effettuare le seguenti verifiche:

A. **Potenza Termica**

La potenza termica del riduttore deve essere uguale o maggiore della potenza meccanica installata o della potenza richiesta dall'applicazione secondo le indicazioni contenute nella sezione (vedi paragrafo "Potenza termica").

B. **Coppia Massima**

Generalmente la coppia massima (picco di carico istantaneo) che può essere applicata al riduttore non deve superare il 200% della coppia nominale M2. (o, per Atex, M2max)

C. **Carichi radiali**

1. Verificare che i carichi radiali agenti sugli alberi di entrata e/o di uscita rispettino i valori ammessi a catalogo. Se superiori, aumentare la grandezza del riduttore o modificare la supportazione del carico esterno. Nella fase di verifica occorre tenere conto che i valori indicati a catalogo si riferiscono a carichi agenti sulla mezzeria della sporgenza dell'albero per cui, nel caso il carico sia applicato in posizione diversa, è necessario determinare con le apposite formule il carico ammissibile nella posizione desiderata (vedi paragrafo "Carichi Radiali").

# 1.2 SELEZIONE DEL PRODOTTO

2. In caso di alberi accessori in uscita verificare che il carico applicato sia compatibile con la dimensione dell'albero. In caso di necessità contattare l'ASSISTENZA TECNICA MOTOVARIO.

D. Se al riduttore selezionato verrà abbinato un motore elettrico, verificarne l'applicabilità consultando la tabella delle predisposizioni (vedi paragrafo "Predisposizioni").

# 1.3 FATTORE DI SERVIZIO



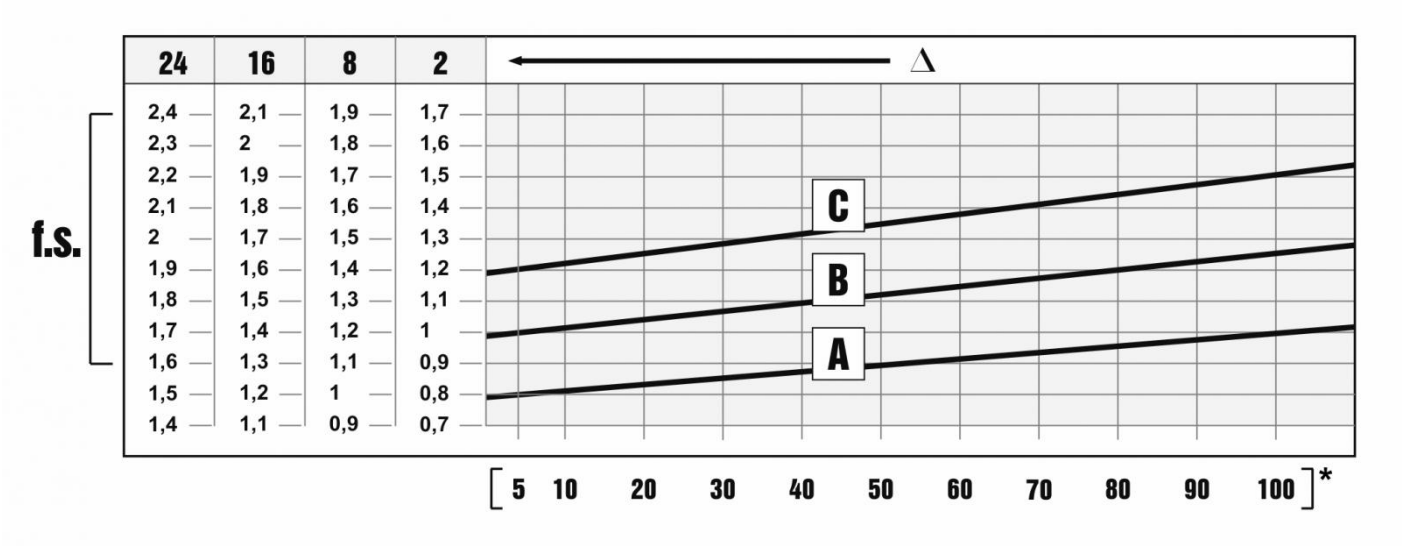


Il fattore di servizio f.s. dipende dalle condizioni di funzionamento alle quali il riduttore è sottoposto. I parametri che occorre considerare per una corretta selezione del fattore di servizio più adeguato sono:

- tipo del carico della macchina azionata: A - B - C
- durata di funzionamento giornaliero: ore/giorno (Δ)
- frequenza di avviamento: avv./ora (*)

**CARICO**:

- **A** - uniforme = fa ≤ 0,3
- **B** - medio = fa ≤ 3
- **C** - forte = fa ≤ 10

**fa = Je/Jm**

- Je ($kgm^2$) momento d'inerzia esterno ridotto all'albero motore
- Jm ($kgm^2$) momento d'inerzia motore

Se fa > 10 interpellare il ns. Servizio Tecnico.

A. Coclee per materiali leggeri, ventole, linee di montaggio, nastri trasportatori per materiali leggeri, piccoli agitatori, elevatori, macchine pulitrici, macchine riempitrici, macchine per il controllo, nastri trasportatori.
B. Dispositivi di avvolgimento, apparecchi per l'alimentazione delle macchine per il legno, montacarichi, equilibratrici, filettatrici, agitatori medi e mescolatori, nastri trasportatori per materiali pesanti, verricelli, porte scorrevoli, raschiatore di concime, macchine per l'imballaggio, betoniere, meccanismi per il movimento delle gru, frese, piegatrici, pompe a ingranaggi.
C. Agitatori per materiali pesanti, cesoie, presse, centrifughe, supporti rotanti, verricelli ed ascensori per materiali pesanti, torni per la rettifica, frantoi da pietre, elevatori a tazze, perforatrici, mulini a martello, presse ad eccentrico, piegatrici, tavole rotanti, barilatrici, vibratori, trinciatrici.

# 1.4 INSTALLAZIONE



**Per l'installazione del riduttore è consigliabile attenersi alle seguenti indicazioni:**

- Il fissaggio sulla macchina deve essere stabile per evitare qualsiasi vibrazione.
- Verificare il corretto senso di rotazione dell'albero di uscita del riduttore prima del montaggio del gruppo sulla macchina.
- In caso di periodi particolarmente lunghi di stoccaggio (4/6 mesi) se l'anello di tenuta non è immerso nel lubrificante contenuto all'interno del gruppo si consiglia la sua sostituzione in quanto la gomma potrebbe essersi incollata all'albero o addirittura aver perso quelle caratteristiche di elasticità necessarie al corretto funzionamento.
- Quando possibile proteggere il riduttore dall'irraggiamento solare e dalle intemperie.
- Garantire un corretto raffreddamento del motore assicurando un buon passaggio d'aria dal lato ventola.
- Nel caso di temperature ambiente < -5°C o >+40°C contattare il servizio Assistenza Tecnica.
- Il montaggio dei vari organi (pulegge, ruote denta- te, giunti, alberi, ecc.) sugli alberi pieni o cavi deve essere eseguito utilizzando appositi fori filettati o altri sistemi che comunque garantiscano una corretta operazione senza rischiare il danneggiamento dei cuscinetti o delle parti esterne dei gruppi.
- Lubrificare le superfici a contatto per evitare grippaggi o ossidazioni.
- La verniciatura non deve assolutamente interessare le parti in gomma e i fori esistenti sui tappi di sfiato, quando presenti.
- Per i gruppi provvisti di tappi per olio sostituire il tappo chiuso utilizzato per la spedizione con l'apposito tappo di sfiato.
- Controllare il corretto livello del lubrificante tramite, quando prevista, l'apposita spia.
- La messa in funzione deve avvenire in maniera graduale, evitando l'applicazione immediata del carico massimo.
- Quando sotto alla motorizzazione sono presenti organi, cose o materiali danneggiabili dall'eventuale fuoriuscita, anche limitata, di olio è opportuno prevedere un'apposita protezione.

**Montaggio motore su flange pam**

Quando il gruppo viene fornito senza motore occorre osservare le seguenti raccomandazioni per garantire un corretto montaggio del motore elettrico. Controllare che le tolleranze dell'albero e della flangia motore siano corrispondenti almeno a una classe di qualità "normale". Pulire accuratamente l'albero, il centraggio ed il piano della flangia da sporco o tracce di vernice. Procedere al montaggio del semigiunto/manicotto (vedi figura) sull'albero del motore elettrico che deve avvenire senza eccessiva forzatura, in caso diverso controllare la corretta posizione e la tolleranza della linguetta motore; utilizzare comunque opportuni sistemi che garantiscano un corretto montaggio senza rischiare il danneggiamento dei cuscinetti motore. Per la versione con semigiunto procedere al montaggio del motore, completo di semigiunto, fasando i denti di trascinamento del semigiunto lato motore con quelli dell'elemento elastico presente sul semigiunto fisso lato riduttore. Non è previsto nessun adattamento della linguetta motore.

**Giunto elastico**

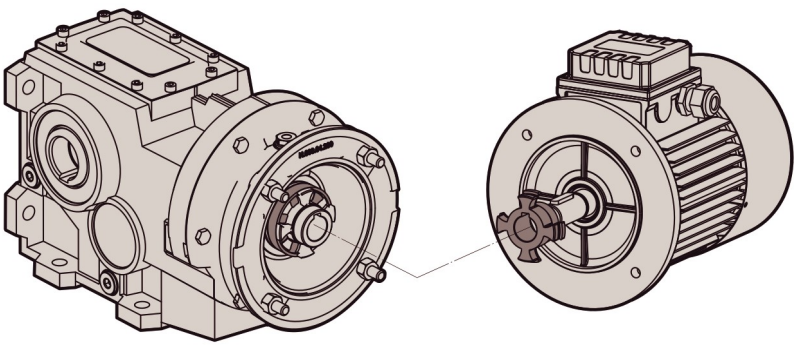

**Manicotto PAM**

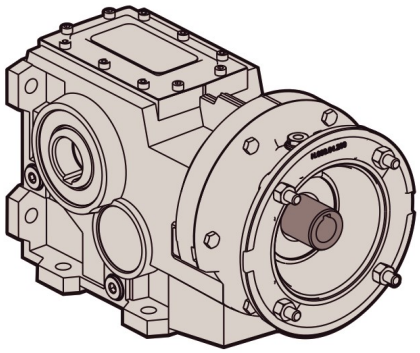

# 2.1 CARATTERISTICHE COSTRUTTIVE



I prodotti Motovario vengono forniti con il seguente stato di finitura superficiale.

**Gruppi con casse in lega di alluminio pressofuso**
Le fusioni subiscono le seguenti operazioni di pulizia superficiale:

- Eliminazione delle bave di fonderia con sistemi meccanici di asportazione (trancianti).
- Accurata pallinatura.
- Verniciatura.
- Lavaggio e passivazione.

**Gruppi con casse in ghisa grigia:**

- Le fusioni vengono sempre verniciate.

**Specifiche verniciatura**:

- Epossipoliestere Blu Bucciato RAL5010. Prodotto utilizzato: Polvere termoindurente a base di resine poliesteri, modificate con resina epossidica.

**Proprietà meccaniche**

- Le prove eseguite su lamierini Unichim sgrassati con spessore del film di 60 micron hanno soddisfatto le seguenti caratteristiche: aderenza (ISO2409).

**Resistenza al calore:**

- 24 ORE A 150°C.

**Resistenza alla corrosione:**

- Nebbia salina ASTM B 117/97 da 100 a 500 ore in funzione del trattamento preliminare del supporto.

**Prestazioni:**

- Capacità di carico verificata secondo DIN 3990, ISO 6336, AGMA 2101, ISO 10300, DIN 3991, ISO 281, DIN 743.

**Rendimento dinamico ηd:**

- Il rendimento di funzionamento è il rapporto tra la potenza resa in uscita P2 e la assorbita dal riduttore P1: **ηd=P2/P1.**

I riduttori ortogonali della serie B e BA presentano un valore medio pari a:
B..3 stadi = 0,9
BA.2 stadi = 0,95
BA.3 stadi = 0,9

# 2.2 TIPOLOGIA

## 2.2.1 Designazione

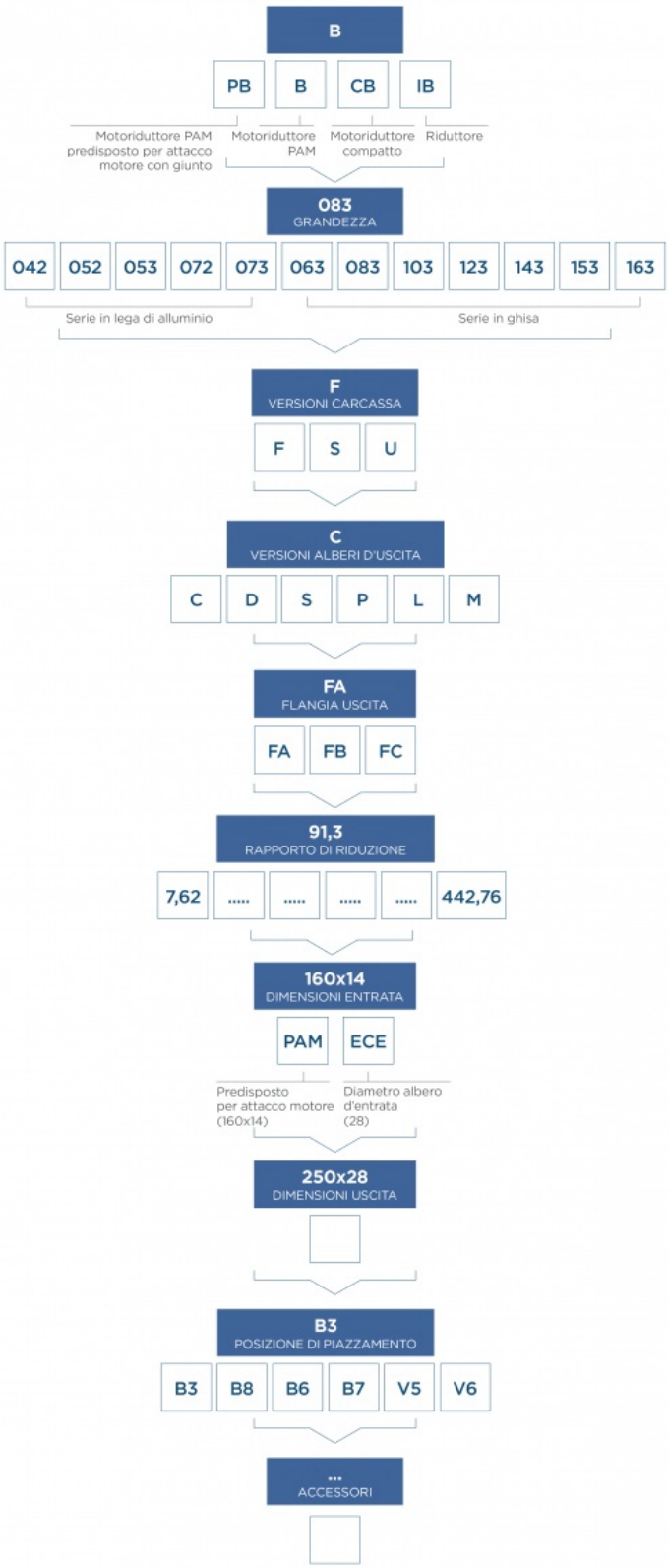

# 2.2 TIPOLOGIA

## 2.2.2 Versioni

**A40-A50-A70**

**C** FISSAGGIO PIEDE / ALBERO CAVO C

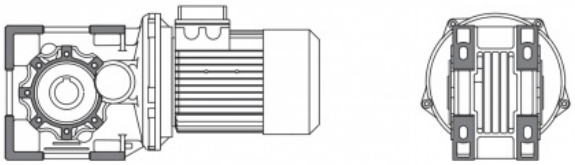

**D** FISSAGGIO PIEDE / ALBERO PIENO D

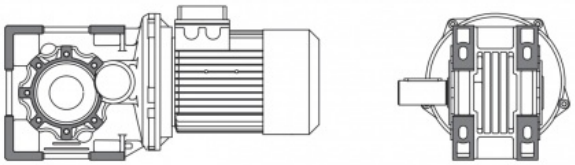

**S** FISSAGGIO PIEDE / ALBERO CAVO S

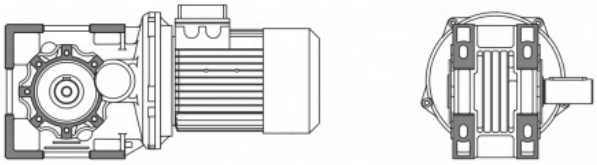

**P** FISSAGGIO PIEDE / ALBERO DOPPIO P

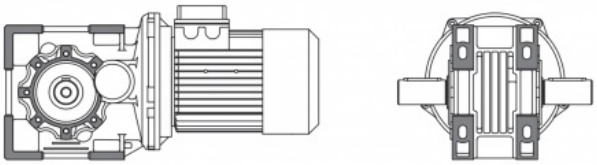

**L** FISSAGGIO PIEDE / ALBERO CALETTATORE L

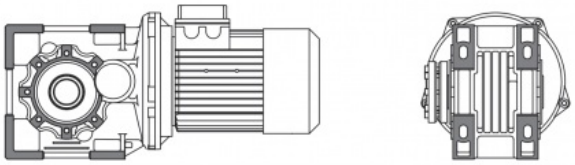

LE GRANDEZZE A42 - A52 - A53:
NON SONO DISPONIBILI NELLE VERSIONI D-S-P

# 2.2 TIPOLOGIA



**063 - 083 - 103 - 123**

**FC** FISSAGGIO PIEDE / ALBERO CAVO C

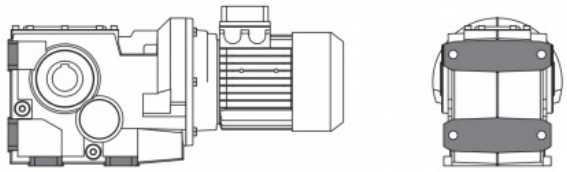

**FD** FISSAGGIO PIEDE / ALBERO PIENO D

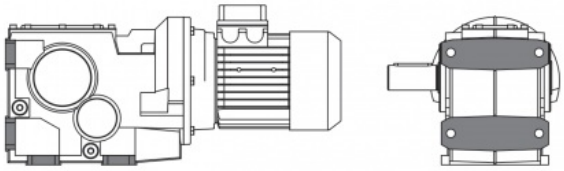

**FS** FISSAGGIO PIEDE / ALBERO CAVO S

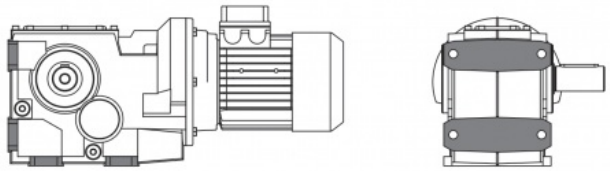

**FP** FISSAGGIO PIEDE / ALBERO DOPPIO P

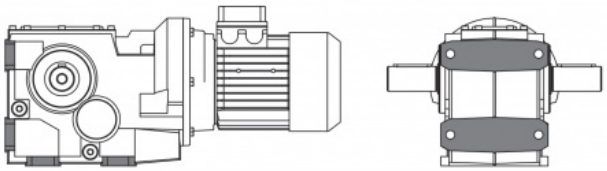

**FL** FISSAGGIO PIEDE / ALBERO CALETTATORE L

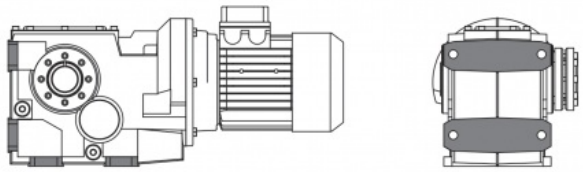

**FM** FISSAGGIO PIEDE / ALBERO CALETTATORE M

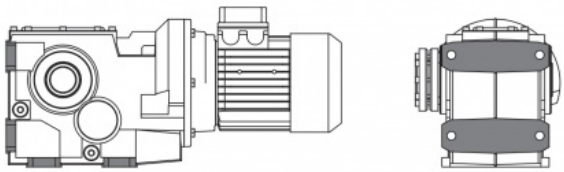

# 2.2 TIPOLOGIA



**063 - 083 - 103 - 123**

**SC** FISSAGIO FLANGIA / ALBERO CAVO C

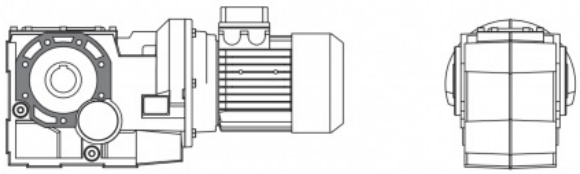

**SD** FLANGE MOUNTING / D SOLID SHAFT

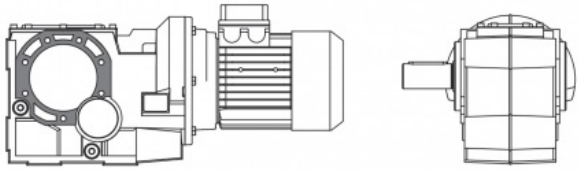

**SS** FISSAGIO FLANGIA / ALBERO PIENO S

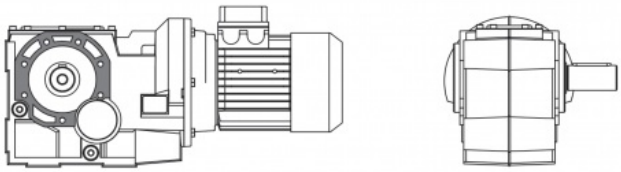

**SP** FISSAGIO FLANGIA / ALBERO DOPPIO P

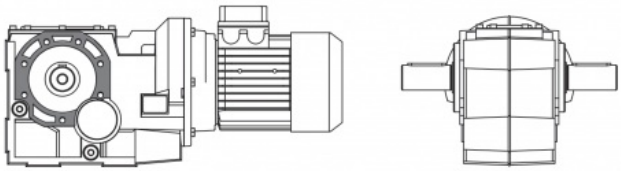

**SL** FISSAGIO FLANGIA / ALBERO CALETTATORE L

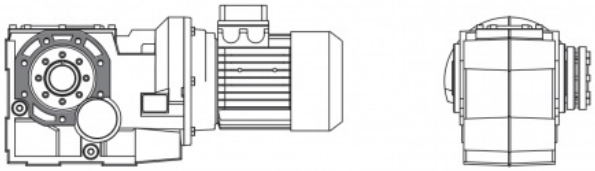

**SM** FISSAGIO FLANGIA / ALBERO CALETTATORE M

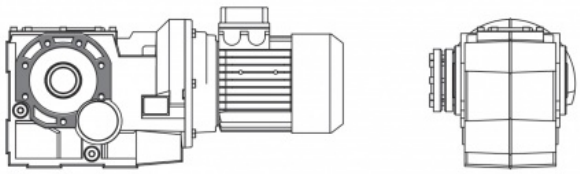

# 2.2 TIPOLOGIA



**063 - 083 - 103 - 123 - 143 - 153 - 163**

**UC** FISSAGGIO PIEDE-FLANGIA / ALBERO CAVO C

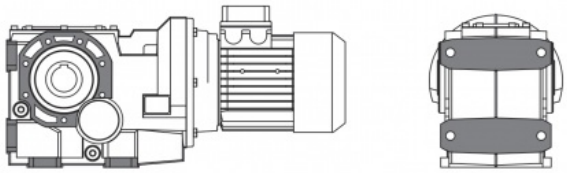

**UD** FISSAGGIO PIEDE-FLANGIA / ALBERO PIENO D

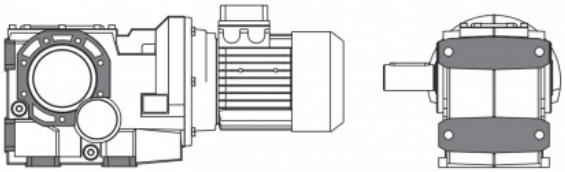

**US** FISSAGGIO PIEDE-FLANGIA / ALBERO PIENO S

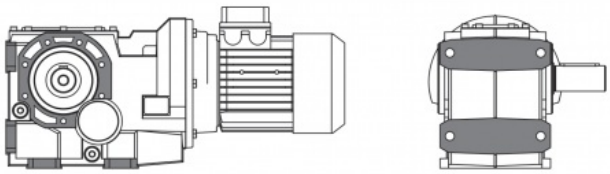

**UP** FISSAGGIO PIEDE-FLANGIA / ALBERO PIENO P

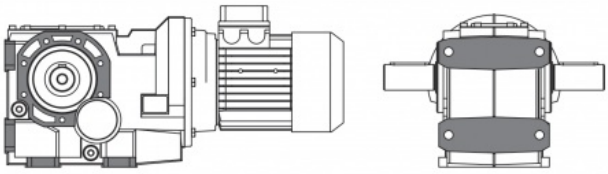

**UL** FISSAGGIO PIEDE-FLANGIA / ALBERO CALETTATORE L

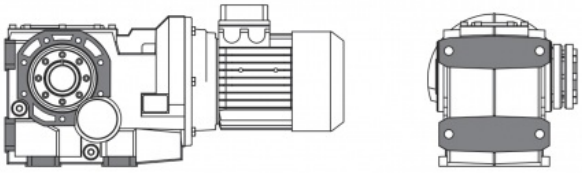

**UM** FISSAGGIO PIEDE-FLANGIA / ALBERO CALETTATORE M

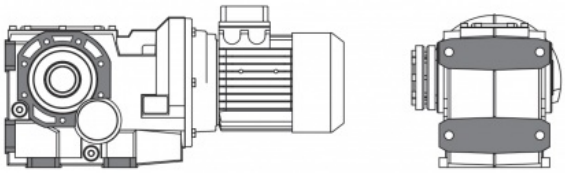

## 2.2.3 Modularità

**BA** SERIE IN LEGA D'ALLUMINIO

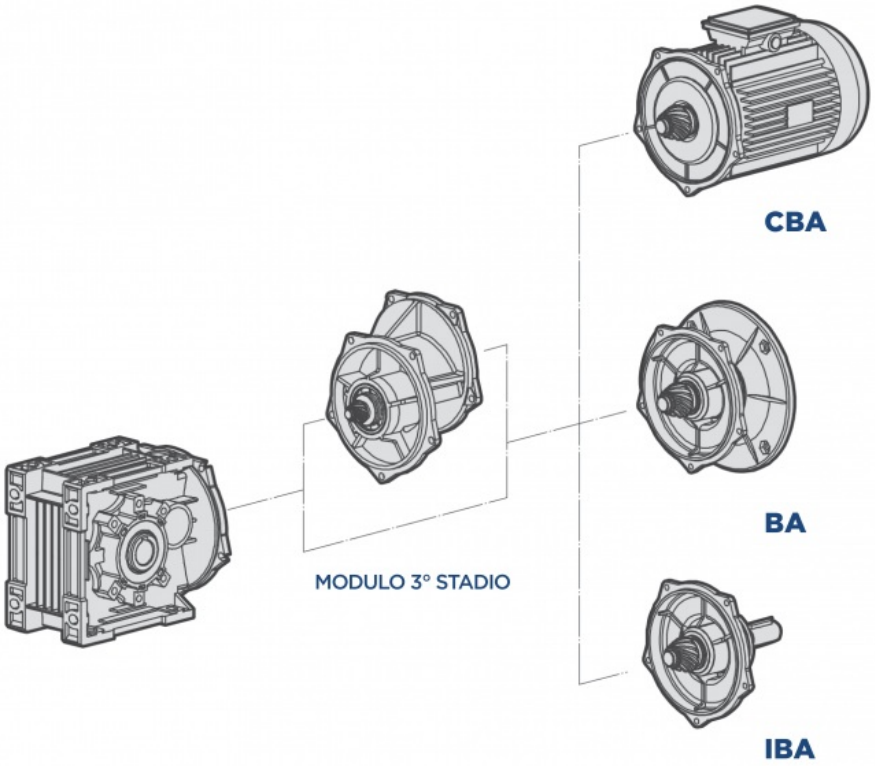


**CBA**

Versioni con motore elettrico compatto

**BA**

Versione con predisposizione per attacco motor PAM

**IBA**

Versioni con albero maschio in ingresso

# 2.2 TIPOLOGIA



**B** SERIE IN GHISA GRIGIA

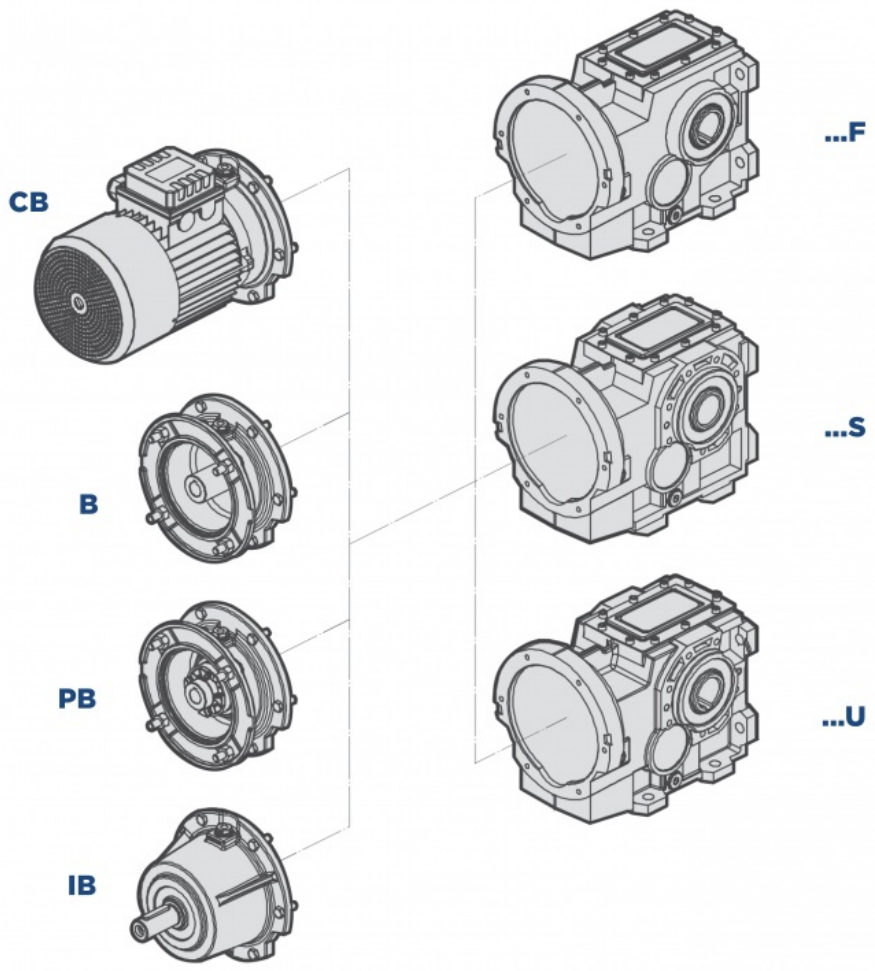


**CB**

Versioni con motore elettrico compatto

**PB**

Predisposto per attacco motore con giunto

**B**

Versione con predisposizione per attacco motore PAM

**IB**

Versioni con albero maschio in ingresso

# 2.3 POSIZIONI DI MONTAGGIO



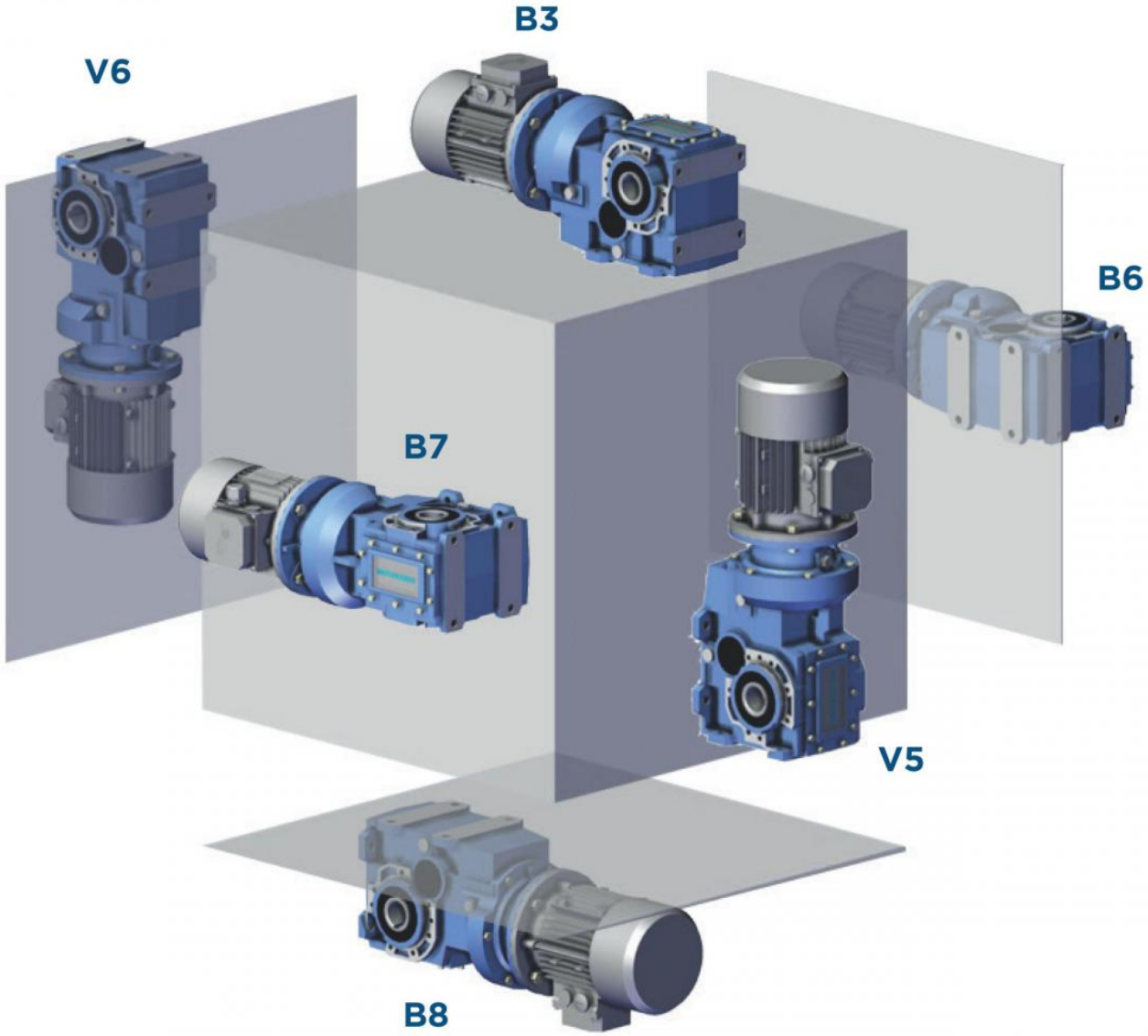

# 2.4 POSIZIONE MORSETTIERA



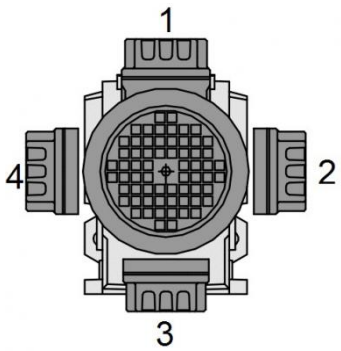


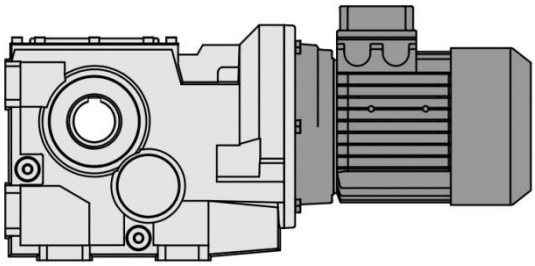

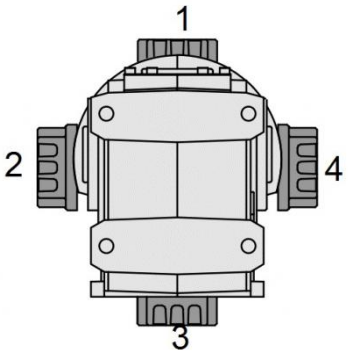


Se non diversamente specificato in fase d'ordine, il gruppo viene fornito con morsettiera in pos.1.

# 2.5 POTENZA TERMICA



## 2.5.1 Informazioni

La seguente tabella riporta i valori di potenza termica nominale espressa in kW nelle seguenti condizioni di riferimento:

- posizione di montaggio B3
- funzionamento continuo con velocità di entrata <= 1500rpm
- temperatura ambiente di 25°C
- altitudine pari al livello del mare
- velocità dell'aria nell'intorno del riduttore >=1m/s
- assenza di carichi radiali e/o assiali esterni

| 1500rpm | |
|---|---|
| | **Pth [kW]** |
| B063 | 10,5 |
| B083 | 11 |
| B103 | 12,5 |
| B123 | 19 |
| B143 | 22,5 |
| B153 | 38 |
| B163 | 55 |

**Applicando al riduttore, nelle suddette condizioni di riferimento, una potenza non superiore a Pth, risultano garantiti una corretta lubrificazione ed il buon funzionamento del riduttore.**

NOTA: I riduttori della serie BA non necessitano di verifiche termiche.

## 2.5.2 Verifica

**Verifica della applicazione**
Fatta eccezione per tempi di funzionamento continuo inferiori a due (2) ore e successive pause in grado di riportare il riduttore a temperatura ambiente, per ogni applicazione è consigliabile eseguire la verifica del limite termico del riduttore, secondo la seguente formula: **Pm < Pth * Fc * Fv*Fa**, dove:

- Pm = potenza in ingresso al riduttore a 1400rpm (motori a 4 poli)
- Pth = potenza termica in condizioni di riferimento (vedi tabella sopra)
- Fc = fattore correttivo di temperatura ambiente e servizio
- Fv = fattore correttivo di aerazione
- Fa = fattore correttivo dell'altitudine

I fattori correttivi (Fc) sono relativi a condizioni operative differenti da quelle di riferimento, e sono forniti dalle seguenti tabelle ISO14179:

| | | Servizio a carico per ora di funzionamento % | | | | |
|---|---|---|---|---|---|---|
| | Fc | 100 | 80 | 70 | 40 | 20 |
| Temperatura ambiente °C | 10 | 1,15 | 1,21 | 1,32 | 1,55 | 2,07 |
| | 18 | 1,07 | 1,12 | 1,23 | 1,44 | 1,93 |
| | 25 | 1,00 | 1,05 | 1,15 | 1,35 | 1,80 |
| | 30 | 0,93 | 0,98 | 1,07 | 1,26 | 1,67 |
| | 40 | 0,83 | 0,87 | 0,95 | 1,12 | 1,49 |
| | 43 | 0,75 | 0,79 | 0,86 | 1,01 | 1,35 |
| | 50 | 0,67 | 0,70 | 0,77 | 0,90 | 1,21 |

| Velocità dell'aria ambientale | Fv |
|---|---|
| Aria stagnante (<0,5 m/s) | 0.75 |
| Installazione al chiuso con lieve aerazione | 1 |
| Installazione al chiuso con buona aerazione (>1,4 m/s) | 1.4 |
| Installazione all'aperto (>3,7 m/s) | 1.9 |

| Altitudine (m) | Fa |
|---|---|
| 0* | 1 |
| 750 | 0,95 |
| 1500 | 0,9 |
| 2250 | 0,85 |
| 3000 | 0,81 |

* Livello del mare
In caso di funzionamento con velocità di ingresso maggiori di 2000rpm, o temperature ambiente maggiori di 40°C è consigliabile contattare il ns servizio di assistenza.

# 2.6 SENSO DI ROTAZIONE



## SENSO DI ROTAZIONE - ALBERO VELOCE

**B-CB-IB** A42-A52-A72

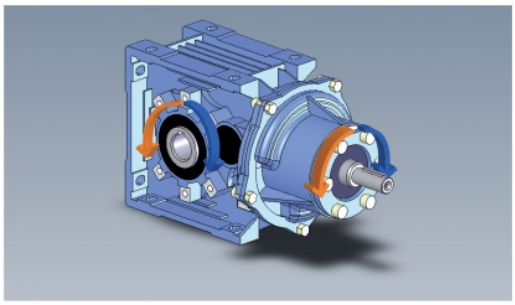

VERSIONI **C-D-P-L**

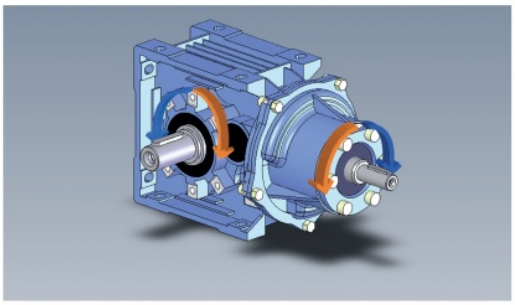

VERSIONE **S**

**B-CB-IB** A53-A73

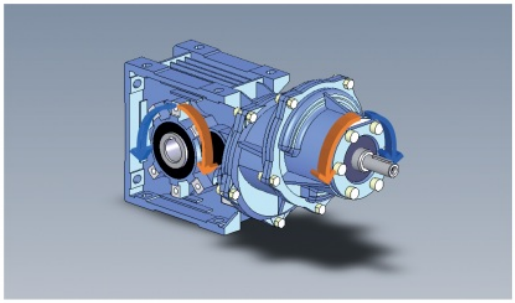

VERSIONI **C-D-P-L**

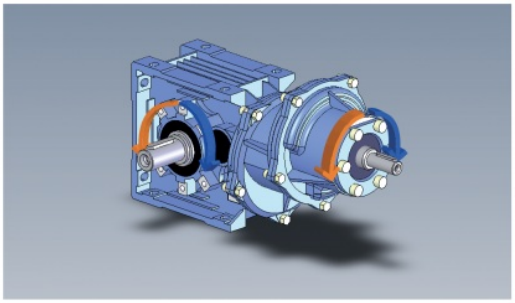

VERSIONE **S**

**B-PB-CB-IB** 063-163

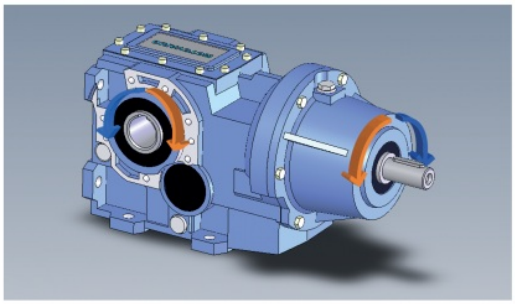

VERSIONI **C-D-P-L**

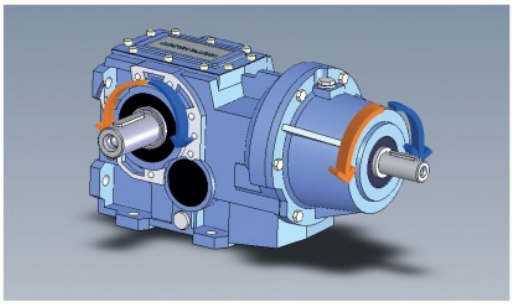

VERSIONE **S-M**

I riduttori ortogonali vengono forniti di serie con rotazione come da schemi riportati.
A richiesta il senso di rotazione dell'asse lento può essere invertito, specificando rotazione opposta in fase d'ordine.
La rotazione opposta non è disponibile per BA42-BA52-BA53.

# 2.7 APPLICAZIONI CRITICHE



## 2.7.1 Applicazioni critiche

| B | A40 | A50 | A70 |
|---|---|---|---|
| 2000 < n1 < 3000 | ✔ | ✔ | ✔ |
| V6 | B | B | B |
| n1 > 3000 | B | B | B |
| ...L : B6 - B7 | B | B | B |

| B | 060 | 080 | 100 | 125 | 140 | 150 | 160 |
|---|---|---|---|---|---|---|---|
| 2000 < n1 < 3000 | ✔ | ✔ | ✔ | B | B | B | B |
| V6 | B | B | B | B | B | B | B |
| n1 > 3000 | B | B | B | B | A | A | A |
| ...L : B6 - B7 | B | B | B | B | B | B | B |

✔ Applicazione verificata

A. Applicazione sconsigliata
B. Verificare l'applicazione e/o contattare il ns. servizio tecnico

Il calettatore è funzionale alla trasmissione del solo momento torcente.
In caso di posizione di montaggio con presenza di carichi radiali e/o assiali, contattare il servizio tecnico.

# 2.7 APPLICAZIONI CRITICHE

## 2.7.2 Informazioni

Le prestazioni indicate a catalogo corrispondono alla posizione B3 o similari, quando cioè il primo stadio non è interamente immerso in olio. Per situazioni di piazzamento diverse e/o velocità di ingresso particolari attenersi alle tabelle che evidenziano situazioni critiche diverse per ciascuna taglia di riduttore. Occorre anche tenere nella giusta considerazione e valutare attentamente le seguenti applicazioni consultando il ns. Servizio Tecnico:

- Utilizzo in servizi che potrebbero risultare pericolosi per l'uomo in caso di rottura del riduttore.
- Evitare l'utilizzo come moltiplicatore.
- Applicazioni con inerzie particolarmente elevate.
- Utilizzo come argano di sollevamento.
- Applicazioni con elevate sollecitazioni dinamiche sulla cassa del riduttore.
- Utilizzo in ambiente con T° inferiore a -5°C o superiore a 40°C.
- Utilizzo in ambiente con presenza di aggressivi chimici.
- Utilizzo in ambiente salmastro.
- Posizioni di piazzamento non previste a catalogo.
- Utilizzo in ambiente radioattivo.
- Utilizzo in ambiente con pressione diversa da quella atmosferica.

Evitare applicazioni dove è prevista l'immersione, anche parziale, del riduttore.
La coppia massima (*) sopportabile dal riduttore non deve superare il doppio della coppia nominale (f.s.=1) riportata nelle tabelle delle prestazioni.
(*) intesa come sovraccarico istantaneo dovuto a avviamenti a pieno carico, frenature, urti ed altre cause soprattutto dinamiche.

# 2.8 DISPONIBILITÀ FLANGE ATTACCO MOTORE



## 2.8.1 Disponibilità flange attacco motore BA

**B10** = Versioni con motore elettrico compatto.

Le tabelle riportano la fattibilità dimensionale degli accoppiamenti. Verificare il fattore di servizio.

| | i | 063 | 071 | 080 | 090 | 100 | 112 |
|---|---|---|---|---|---|---|---|
| **CB A42** | 7,62 ÷ 64,13 | B10 | B10 | B10 | | | |
| **CB A42** | 78,17 | B10 | B10 | | | | |
| **CB A52** | 7,91 ÷ 31,63 | B10 | B10 | B10 | B10 | | |
| **CB A52** | 35,1 ÷ 64,87 | B10 | B10 | B10 | | | |
| **CB A52** | 79,07 | B10 | B10 | | | | |
| **CB A53** | 73,7 ÷ 172,53 | B10 | B10 | B10 | B10 | | |
| **CB A53** | 197,11 ÷ 342,65 | B10 | B10 | | | | |
| **CB A72** | 8,36 ÷ 22,19 | | | | B10 | B10 | B10 |
| **CB A72** | 27,45 ÷ 40,87 | | | B10 | B10 | B10 | B10 |
| **CB A72** | 45,64 ÷ 67,96 | | | B10 | B10 | | |
| **CB A73** | 43,89 ÷ 222,93 | B10 | B10 | B10 | B10 | | |
| **CB A73** | 260,2 ÷ 442,76 | B10 | B10 | | | | |

| | i | 063 | 071 | 080 | 090 | 100 | 112 |
|---|---|---|---|---|---|---|---|
| **BA42** | 7,62 ÷ 64,13 | B5 | B5-B14 | B5 - B14 | | | |
| **BA42** | 78,17 | B5 | B5-B14 | | | | |
| **BA52** | 7,91 ÷ 31,63 | B5 | B5-B14 | B5-B14 | B5-B14 | | |
| **BA52** | 35,1 ÷ 64,87 | B5 | B5-B14 | B5-B14 | | | |
| **BA52** | 79,07 | B5 | B5-B14 | | | | |
| **BA53** | 73,7 ÷ 172,53 | B5 | B5-B14 | B5-B14 | B5-B14 | | |
| **BA53** | 197,11 ÷ 342,65 | B5 | B5-B14 | | | | |
| **BA72** | 8,36 ÷ 22,19 | | | | B5-B14 | B5-B14 | B5-B14 |
| **BA72** | 27,45 ÷ 40,87 | | | B5-B14 | B5-B14 | B5-B14 | B5-B14 |
| **BA72** | 45,64 ÷ 67,96 | | | B5-B14 | B5-B14 | | |
| **BA73** | 43,89 ÷ 222,93 | B5 | B5-B14 | B5-B14 | B5-B14 | | |
| **BA73** | 260,2 ÷ 442,76 | B5 | B5-B14 | | | | |

## 2.8.2 Disponibilità flange attacco motore B

**B11** = Versioni con motore elettrico compatto.

Le tabelle riportano la fattibilità dimensionale degli accoppiamenti. Verificare il fattore di servizio.

Motore gr.063 non esiste la versione PB.

| CB - B - PB 063 | | | | | |
|---|---|---|---|---|---|
| i | 063 | 071 | 080 | 90 | 100-112 |
| 5,71 | | | B5-B11 | B5-B11 | B5-B11 |
| 6,88 | | | B5-B11 | B5-B11 | B5-B11 |
| 7,32 | | B5-B11 | B5-B11 | B5-B11 | B5-B11 |
| 9,16 | | | B5-B11 | B5-B11 | B5-B11 |
| 10,26 | | | B5-B11 | B5-B11 | B5-B11 |
| 11,03 | | | B5-B11 | B5-B11 | B5-B11 |
| 12,35 | | | B5-B11 | B5-B11 | B5-B11 |
| 13,15 | | B5-B11 | B5-B11 | B5-B11 | B5-B11 |
| 15,18 | | B5-B11 | B5-B11 | B5-B11 | B5-B11 |
| 17,00 | | B5-B11 | B5-B11 | B5-B11 | B5-B11 |
| 22,39 | | B5-B11 | B5-B11 | B5-B11 | B5-B11 |
| 26,09 | | | B5-B11 | B5-B11 | B5-B11 |
| 28,03 | | | B5-B11 | B5-B11 | B5-B11 |
| 33,43 | | B5-B11 | B5-B11 | B5-B11 | B5-B11 |
| 38,58 | | B5-B11 | B5-B11 | B5-B11 | B5-B11 |
| 43,22 | | B5-B11 | B5-B11 | B5-B11 | B5-B11 |
| 50,81 | | B5-B11 | B5-B11 | B5-B11 | B5-B11 |
| 56,93 | | B5-B11 | B5-B11 | B5-B11 | B5-B11 |
| 69,16 | B5-B11 | B5-B11 | B5-B11 | B5-B11 | |
| 77,48 | B5-B11 | B5-B11 | B5-B11 | B5-B11 | |
| 90,33 | B5-B11 | B5-B11 | B5-B11 | | |
| 101,20 | B5-B11 | B5-B11 | B5-B11 | | |
| 111,74 | B5-B11 | B5-B11 | B5-B11 | | |
| 124,20 | B5-B11 | B5-B11 | B5-B11 | | |
| 139,15 | B5-B11 | B5-B11 | B5-B11 | | |
| 157,42 | B5-B11 | B5-B11 | B5-B11 | | |

# 2.8 DISPONIBILITÀ FLANGE ATTACCO MOTORE



| CB - B - PB 083 | | | | | |
|---|---|---|---|---|---|
| i | 080 | 090 | 100 | 112 | 132 |
| 7,81 | B5-B11 | B5-B11 | B5-B11 | B5-B11 | B5-B11 |
| 8,62 | B5-B11 | B5-B11 | B5-B11 | B5-B11 | B5-B11 |
| 10,49 | B5-B11 | B5-B11 | B5-B11 | B5-B11 | B5-B11 |
| 11,59 | B5-B11 | B5-B11 | B5-B11 | B5-B11 | B5-B11 |
| 14,43 | B5-B11 | B5-B11 | B5-B11 | B5-B11 | B5-B11 |
| 16,60 | B5-B11 | B5-B11 | B5-B11 | B5-B11 | B5-B11 |
| 18,32 | B5-B11 | B5-B11 | B5-B11 | B5-B11 | B5-B11 |
| 22,82 | B5-B11 | B5-B11 | B5-B11 | B5-B11 | B5-B11 |
| 26,71 | B5-B11 | B5-B11 | B5-B11 | B5-B11 | B5-B11 |
| 29,50 | B5-B11 | B5-B11 | B5-B11 | B5-B11 | B5-B11 |
| 31,80 | B5-B11 | B5-B11 | B5-B11 | B5-B11 | B5-B11 |
| 34,49 | B5-B11 | B5-B11 | B5-B11 | B5-B11 | B5-B11 |
| 39,60 | B5-B11 | B5-B11 | B5-B11 | B5-B11 | B5-B11 |
| 42,95 | B5-B11 | B5-B11 | B5-B11 | B5-B11 | B5-B11 |
| 45,44 | B5-B11 | B5-B11 | B5-B11 | B5-B11 | B5-B11 |
| 51,19 | B5-B11 | B5-B11 | B5-B11 | B5-B11 | B5-B11 |
| 55,52 | B5-B11 | B5-B11 | B5-B11 | B5-B11 | B5-B11 |
| 59,96 | B5-B11 | B5-B11 | B5-B11 | B5-B11 | B5-B11 |
| 63,74 | B5-B11 | B5-B11 | B5-B11 | B5-B11 | B5-B11 |
| 69,14 | B5-B11 | B5-B11 | B5-B11 | B5-B11 | B5-B11 |
| 73,14 | B5-B11 | B5-B11 | B5-B11 | B5-B11 | B5-B11 |
| 80,76 | B5-B11 | B5-B11 | B5-B11 | B5-B11 | B5-B11 |
| 92,19 | B5-B11 | B5-B11 | B5-B11 | B5-B11 | |
| 100,57 | B5-B11 | B5-B11 | B5-B11 | B5-B11 | B5-B11 |
| 105,29 | B5-B11 | B5-B11 | B5-B11 | B5-B11 | |
| 116,25 | B5-B11 | B5-B11 | B5-B11 | B5-B11 | |
| 126,76 | B5-B11 | B5-B11 | B5-B11 | B5-B11 | |
| 144,77 | B5-B11 | B5-B11 | B5-B11 | B5-B11 | |

# 2.8 DISPONIBILITÀ FLANGE ATTACCO MOTORE



| CB - B - PB 103 | | | | | | |
|---|---|---|---|---|---|---|
| i | 080 | 090 | 100 | 112 | 132 | 160 |
| 8,13 | B5-B11 | B5-B11 | B5-B11 | B5-B11 | B5-B11 | B5 |
| 8,97 | B5-B11 | B5-B11 | B5-B11 | B5-B11 | B5-B11 | B5 |
| 10,92 | B5-B11 | B5-B11 | B5-B11 | B5-B11 | B5-B11 | B5 |
| 12,05 | B5-B11 | B5-B11 | B5-B11 | B5-B11 | B5-B11 | B5 |
| 14,99 | B5-B11 | B5-B11 | B5-B11 | B5-B11 | B5-B11 | B5 |
| 17,27 | B5-B11 | B5-B11 | B5-B11 | B5-B11 | B5-B11 | B5 |
| 19,06 | B5-B11 | B5-B11 | B5-B11 | B5-B11 | B5-B11 | B5 |
| 23,70 | B5-B11 | B5-B11 | B5-B11 | B5-B11 | B5-B11 | B5 |
| 26,51 | B5-B11 | B5-B11 | B5-B11 | B5-B11 | B5-B11 | B5 |
| 30,55 | B5-B11 | B5-B11 | B5-B11 | B5-B11 | B5-B11 | B5 |
| 33,07 | B5-B11 | B5-B11 | B5-B11 | B5-B11 | B5-B11 | |
| 35,87 | B5-B11 | B5-B11 | B5-B11 | B5-B11 | B5-B11 | |
| 41,12 | B5-B11 | B5-B11 | B5-B11 | B5-B11 | B5-B11 | |
| 44,61 | B5-B11 | B5-B11 | B5-B11 | B5-B11 | B5-B11 | |
| 47,28 | B5-B11 | B5-B11 | B5-B11 | B5-B11 | B5-B11 | |
| 50,24 | B5-B11 | B5-B11 | B5-B11 | B5-B11 | B5-B11 | |
| 53,02 | B5-B11 | B5-B11 | B5-B11 | B5-B11 | B5-B11 | |
| 58,50 | B5-B11 | B5-B11 | B5-B11 | B5-B11 | B5-B11 | |
| 64,89 | B5-B11 | B5-B11 | B5-B11 | B5-B11 | B5-B11 | |
| 68,58 | B5-B11 | B5-B11 | B5-B11 | B5-B11 | B5-B11 | |
| 72,76 | B5-B11 | B5-B11 | B5-B11 | B5-B11 | B5-B11 | |
| 78,92 | B5-B11 | B5-B11 | B5-B11 | B5-B11 | B5-B11 | |
| 83,66 | B5-B11 | B5-B11 | B5-B11 | B5-B11 | B5-B11 | |
| 92,31 | B5-B11 | B5-B11 | B5-B11 | B5-B11 | B5-B11 | |
| 105,44 | B5-B11 | B5-B11 | B5-B11 | B5-B11 | | |
| 114,80 | B5-B11 | B5-B11 | B5-B11 | B5-B11 | B5-B11 | |
| 120,42 | B5-B11 | B5-B11 | B5-B11 | B5-B11 | | |
| 132,87 | B5-B11 | B5-B11 | B5-B11 | B5-B11 | | |
| 144,69 | B5-B11 | B5-B11 | B5-B11 | B5-B11 | | |
| 165,25 | B5-B11 | B5-B11 | B5-B11 | B5-B11 | | |

# 2.8 DISPONIBILITÀ FLANGE ATTACCO MOTORE



| CB - B - PB 123 | | | | | | |
|---|---|---|---|---|---|---|
| i | 090 | 100 | 112 | 132 | 160 | 180 |
| 7,97 | | | | B5-B11 | B5 | B5 |
| 9,62 | | | | B5-B11 | B5 | B5 |
| 10,33 | | | | B5-B11 | B5 | B5 |
| 12,48 | | | | B5-B11 | B5 | B5 |
| 13,84 | | | | B5-B11 | B5 | B5 |
| 15,38 | | | | B5-B11 | B5 | B5 |
| 18,58 | | | | B5-B11 | B5 | B5 |
| 20,61 | | | | B5-B11 | B5 | B5 |
| 22,78 | | | | B5-B11 | B5 | B5 |
| 25,89 | | B5-B11 | B5-B11 | B5-B11 | B5 | B5 |
| 27,51 | | | | B5-B11 | B5 | B5 |
| 30,79 | | | | B5-B11 | B5 | B5 |
| 31,26 | | B5-B11 | B5-B11 | B5-B11 | B5 | B5 |
| 34,68 | | B5-B11 | B5-B11 | B5-B11 | B5 | B5 |
| 40,53 | | B5-B11 | B5-B11 | B5-B11 | B5 | B5 |
| 44,89 | | B5-B11 | B5-B11 | B5-B11 | B5 | B5 |
| 49,80 | | B5-B11 | B5-B11 | B5-B11 | B5 | B5 |
| 54,30 | | B5-B11 | B5-B11 | B5-B11 | B5 | B5 |
| 59,36 | | B5-B11 | B5-B11 | B5-B11 | B5 | B5 |
| 62,59 | | B5-B11 | B5-B11 | B5-B11 | B5 | B5 |
| 69,43 | | B5-B11 | B5-B11 | B5-B11 | B5 | B5 |
| 74,42 | | B5-B11 | B5-B11 | B5-B11 | B5 | B5 |
| 80,04 | B5-B11 | B5-B11 | B5-B11 | B5-B11 | | |
| 89,87 | | B5-B11 | B5-B11 | B5-B11 | B5 | B5 |
| 99,70 | | B5-B11 | B5-B11 | B5-B11 | B5 | B5 |
| 106,65 | B5-B11 | B5-B11 | B5-B11 | B5-B11 | | |
| 119,60 | B5-B11 | B5-B11 | B5-B11 | B5-B11 | | |
| 129,96 | B5-B11 | B5-B11 | B5-B11 | B5-B11 | | |
| 144,43 | B5-B11 | B5-B11 | B5-B11 | B5-B11 | | |
| 160,23 | B5-B11 | B5-B11 | B5-B11 | B5-B11 | | |
| 180,40 | B5-B11 | B5-B11 | B5-B11 | B5-B11 | | |

# 2.8 DISPONIBILITÀ FLANGE ATTACCO MOTORE



| CB - B - PB 143 | | | | | | |
|---|---|---|---|---|---|---|
| i | 100 | 112 | 132 | 160 | 180 | 200 |
| 10,84 | | | B5-B11 | B5 | B5 | B5 |
| 11,87 | | | B5-B11 | B5 | B5 | B5 |
| 14,49 | | | B5-B11 | B5 | B5 | B5 |
| 17,04 | | | B5-B11 | B5 | B5 | B5 |
| 18,66 | | | B5-B11 | B5 | B5 | B5 |
| 21,00 | | | B5-B11 | B5 | B5 | B5 |
| 22,77 | | | B5-B11 | B5 | B5 | B5 |
| 25,63 | | | B5-B11 | B5 | B5 | B5 |
| 27,44 | B5-B11 | B5-B11 | B5-B11 | B5 | B5 | B5 |
| 30,05 | B5-B11 | B5-B11 | B5-B11 | B5 | B5 | B5 |
| 33,01 | | | B5-B11 | B5 | B5 | B5 |
| 36,67 | B5-B11 | B5-B11 | B5-B11 | B5 | B5 | B5 |
| 40,29 | | | B5-B11 | B5 | B5 | B5 |
| 44,16 | B5-B11 | B5-B11 | B5-B11 | B5 | B5 | B5 |
| 48,35 | B5-B11 | B5-B11 | B5-B11 | B5 | B5 | B5 |
| 53,16 | B5-B11 | B5-B11 | B5-B11 | B5 | B5 | B5 |
| 54,63 | B5-B11 | B5-B11 | B5-B11 | B5 | B5 | B5 |
| 59,02 | B5-B11 | B5-B11 | B5-B11 | B5 | B5 | B5 |
| 64,88 | B5-B11 | B5-B11 | B5-B11 | B5 | B5 | B5 |
| 70,43 | B5-B11 | B5-B11 | B5-B11 | B5 | B5 | |
| 77,12 | B5-B11 | B5-B11 | B5-B11 | B5 | B5 | |
| 85,54 | B5-B11 | B5-B11 | B5-B11 | B5 | B5 | B5 |
| 94,13 | B5-B11 | B5-B11 | B5-B11 | B5 | B5 | |
| 105,83 | B5-B11 | B5-B11 | B5-B11 | | | |
| 111,94 | B5-B11 | B5-B11 | B5-B11 | B5 | B5 | |
| 124,62 | B5-B11 | B5-B11 | B5-B11 | B5 | B5 | |
| 136,44 | B5-B11 | B5-B11 | B5-B11 | B5 | B5 | |
| 149,59 | B5-B11 | B5-B11 | B5-B11 | B5 | B5 | |
| 166,53 | B5-B11 | B5-B11 | B5-B11 | B5 | B5 | |
| 187,24 | B5-B11 | B5-B11 | B5-B11 | | | |

# 2.8 DISPONIBILITÀ FLANGE ATTACCO MOTORE



| CB - B - PB 153 | | | | | |
|---|---|---|---|---|---|
| i | 132 | 160 | 180 | 200 | 225 |
| 10,49 | | B5 | B5 | B5 | B5 |
| 12,64 | | B5 | B5 | B5 | B5 |
| 14,01 | | B5 | B5 | B5 | B5 |
| 15,40 | | B5 | B5 | B5 | B5 |
| 18,56 | | B5 | B5 | B5 | B5 |
| 20,56 | | B5 | B5 | B5 | B5 |
| 23,86 | | B5 | B5 | B5 | B5 |
| 25,19 | B5 | B5 | B5 | B5 | B5 |
| 28,23 | B5 | B5 | B5 | B5 | B5 |
| 30,35 | B5 | B5 | B5 | B5 | B5 |
| 33,63 | B5 | B5 | B5 | B5 | B5 |
| 35,02 | | B5 | B5 | B5 | B5 |
| 38,81 | | B5 | B5 | B5 | B5 |
| 42,30 | B5 | B5 | B5 | B5 | B5 |
| 47,53 | B5 | B5 | B5 | B5 | B5 |
| 50,56 | B5 | B5 | B5 | B5 | B5 |
| 54,64 | B5 | B5 | B5 | B5 | B5 |
| 57,27 | B5 | B5 | B5 | B5 | B5 |
| 60,92 | B5 | B5 | B5 | B5 | B5 |
| 63,47 | B5 | B5 | B5 | B5 | B5 |
| 71,10 | B5 | B5 | B5 | | |
| 77,22 | B5 | B5 | B5 | B5 | B5 |
| 83,90 | B5 | B5 | B5 | | |
| 87,70 | B5 | B5 | B5 | | |
| 93,05 | B5 | B5 | B5 | B5 | B5 |
| 103,12 | B5 | B5 | B5 | B5 | B5 |
| 123,90 | B5 | B5 | B5 | | |
| 134,30 | B5 | B5 | B5 | | |
| 149,30 | B5 | B5 | B5 | | |
| 165,40 | B5 | B5 | B5 | | |

# 2.8 DISPONIBILITÀ FLANGE ATTACCO MOTORE



| CB - B - PB 163 | | | | | | |
|---|---|---|---|---|---|---|
| i | 160 | 180 | 200 | 225 | 250 | 280 |
| 8,89 | | B5 | B5 | B5 | B5 | B5 |
| 10,58 | | B5 | B5 | B5 | B5 | B5 |
| 11,87 | | B5 | B5 | B5 | B5 | B5 |
| 12,81 | | B5 | B5 | B5 | B5 | B5 |
| 14,08 | | B5 | B5 | B5 | B5 | B5 |
| 15,52 | | B5 | B5 | B5 | B5 | B5 |
| 16,39 | | B5 | B5 | B5 | B5 | B5 |
| 18,02 | B5 | B5 | B5 | B5 | B5 | B5 |
| 19,96 | B5 | B5 | B5 | B5 | B5 | |
| 21,94 | B5 | B5 | B5 | B5 | B5 | B5 |
| 24,17 | B5 | B5 | B5 | B5 | B5 | B5 |
| 26,58 | B5 | B5 | B5 | B5 | B5 | B5 |
| 28,80 | B5 | B5 | B5 | B5 | B5 | |
| 30,92 | B5 | B5 | B5 | B5 | B5 | B5 |
| 34,25 | B5 | B5 | B5 | B5 | B5 | |
| 37,66 | B5 | B5 | B5 | B5 | B5 | |
| 40,65 | B5 | B5 | B5 | B5 | B5 | |
| 45,09 | B5 | B5 | B5 | B5 | B5 | |
| 51,00 | B5 | B5 | B5 | B5 | B5 | |
| 53,63 | B5 | B5 | B5 | B5 | B5 | |
| 58,97 | B5 | B5 | B5 | B5 | B5 | |
| 69,78 | B5 | B5 | B5 | B5 | | |
| 76,72 | B5 | B5 | B5 | | | |
| 87,54 | B5 | B5 | B5 | | | |
| 96,25 | B5 | B5 | B5 | | | |
| 103,93 | B5 | B5 | B5 | | | |
| 114,27 | B5 | B5 | | | | |
| 126,29 | B5 | B5 | | | | |
| 138,85 | B5 | B5 | | | | |
| 154,83 | B5 | B5 | | | | |

# 2.9 CUSCINETTI ASSE LENTO



| BA | | BA40 | | BA50 | | BA70 | |
|---|---|---|---|---|---|---|---|
| Versione (*) | | Standard | A richiesta | Standard | A richiesta | Standard | A richiesta |
| U | C | 1 | / | 1 | / | 1 | / |
| | D/S/P | / | / | / | / | 1 | / |
| | L/M | 1 | / | 1 | / | 1 | / |

( * ) NB. Le grandezze A42 - A52 - A53 non sono disponibili nelle versioni D-S-P.

| B | | B060 | | B080 | | B100/125 | | B140/150/160 | |
|---|---|---|---|---|---|---|---|---|---|
| Versione | | Standard | A richiesta | Standard | A richiesta | Standard | A richiesta | Standard | A richiesta |
| U | C | 2 | / | 2 (Ø40) | 1 (Ø45) | 2 | / | 2 | / |
| | D/S/P | 2 | / | 2 | / | 2 | / | 2 | / |
| | L/M | 1 | / | 1 | / | 1 | / | 2 | / |
| F/S | C | 1 | 2 | 1 | 2 | 1 | 2 | / | / |
| | D/S/P | 2 | / | 2 | / | 2 | / | / | / |
| | L/M | 1 | / | 1 | / | 1 | / | / | / |

1 - Cuscinetti a sfera

2 - Cuscinetti a rulli

/ - Non Disponibile

# 2.10 CARICHI RADIALI



## 2.10.1 Informazioni

Il valore del carico radiale (N) ammissibile viene riportato nelle tabelle relative alle prestazioni del riduttore in esame, ed è relativo al carico applicato sulla mezzeria dell'albero e nelle condizioni più sfavorevoli come angolo di applicazione e senso di rotazione.

I carichi assiali massimi ammissibili sono 1/5 del valore del carico radiale indicato quando sono applicati in combinazione col carico radiale stesso. Nelle tabelle relative agli alberi di uscita viene indicato il valore massimo ammissibile, questo valore non deve mai essere superato in quanto è relativo alla resistenza della cassa.

Possono essere verificate condizioni particolari di carico radiale superiori ai limiti di catalogo, in questo caso contattare il ns. Servizio Tecnico e fornire tutti i dati applicativi: direzione del carico, senso di rotazione dell'albero, tipo di servizio.

Nel caso di alberi bisporgenti e cavi in cui è previsto l'applicazione di carichi radiali su entrambe le estremità, i carichi massimi ammissibili sono da definire in funzione delle condizioni di esercizio specifiche, in questo caso contattare il ns. Servizio Tecnico.

Il carico radiale sull'albero si calcola con la seguente formula: **Fre=(2000*M*fz)/D≤Fr1 o Fr2**

- **Fre** (N) Carico radiale risultante
- **M** (Nm) Momento torcente sull'albero
- **D** (mm) Diametro dell'elemento di trasmissione montato sull'albero
- **Fr** (N) Valore di carico radiale massimo ammesso
- **Fr1**-**Fr2** (ved. tab. relative)
- **fz** = 1,1 pignone dentato

  1,4 ruota per catena

  1,7 puleggia a gola

  2,5 puleggia piana

Quando il carico radiale risultante non è applicato in mezzeria dell'albero occorre correggere il carico radiale ammissibile Fr1-2 con la seguente formula: **$Frx=(Fr_{1\ o\ 2}*a)/(b+x)$**

- **a** , **b** = valori riportati nelle tabelle
- **x** = distanza del punto di applicazione del carico da spallamento albero

# 2.10 CARICHI RADIALI

## 2.10.2 Entrata

Con carico radiale risultante non in mezzeria dell'albero, correggere il carico radiale ammissibile Fr1 con la formula: **Frx=(Fr1*a)/(b+x)**

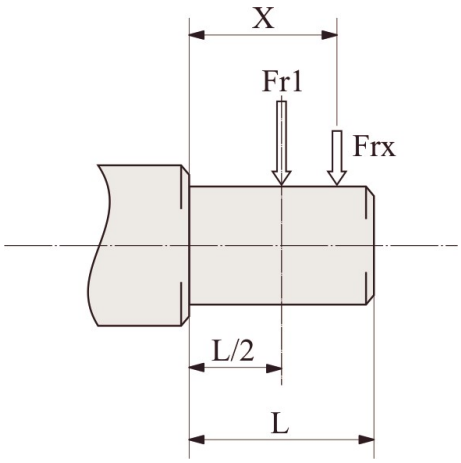


| IB | A42 A52 A53 A73 | A72 |
|---|---|---|
| a | 84 | 89 |
| b | 64 | 69 |
| Fr1 max (**) | 500 | 830 |

| IB | 063 | 083 | 103 | 123 | 143 | 153 | 163 |
|---|---|---|---|---|---|---|---|
| a | 105 | 137 | 137 | 175 | 175 | 225 | 221 |
| b | 80 | 108 | 108 | 135 | 135 | 170 | 166 |
| Fr1 max (**) | 2200 | 2500 | 3200 | 4200 | 7000 | 10000 | 12000 |

(**Fr1) Valore massimo ammissibile dal riduttore in condizioni statiche e/o per funzionamenti limitati. Per carichi radiali in servizio continuativo verificare i valori delle tabelle prestazionali calcolati in funzione della carcassa, dell'albero e dei cuscinetti.

## 2.10.3 Uscita

Con carico radiale risultante non in mezzeria dell'albero, correggere il carico radiale ammissibile Fr2 con la formula: **Frx=(Fr2*a)/(b+x)**

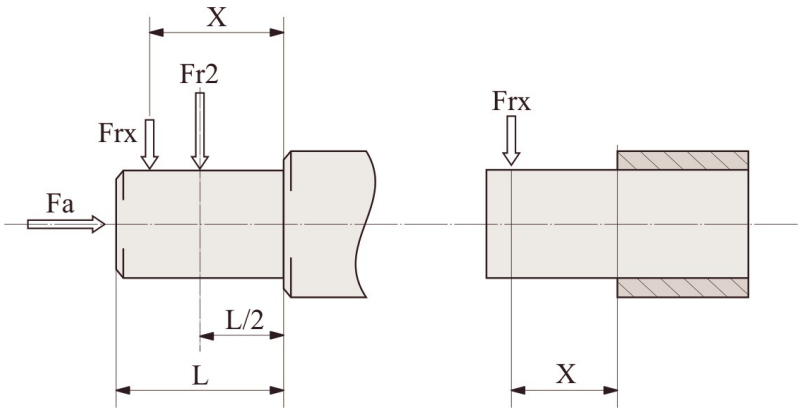


| B | A42 | A52 A53 | A72 A73 |
|---|---|---|---|
| a | 105 | 119 | 145 |
| b | 85 | 94 | 116 |
| D-S-P (Fr2 max **) | - | - | 10000 |
| C (Fr2 max **) | 4000 | 4000 | 5500 |

| B | 063 | 083 | 103 | 123 | 143 | 153 | 163 |
|---|---|---|---|---|---|---|---|
| a | 129 | 190 | 225 | 262 | 306 | 348 | 468 |
| b | 100 | 150 | 175 | 202 | 236 | 278 | 363 |
| D-S-P (Fr2 max **) | 12000 | 18000 | 22000 | 30000 | 40000 | 65000 | 80000 |
| C (Fr2 max **) | 8000 | 12000 | 15000 | 20000 | 40000 | 65000 | 65000 |

(**Fr2) Valore massimo ammissibile dal riduttore in condizioni statiche e/o per funzionamenti limitati. Per carichi radiali in servizio continuativo verificare i valori delle tabelle prestazionali calcolati in funzione della carcassa, dell'albero e dei cuscinetti.

# 2.11 LUBRIFICAZIONE



## 2.11.1 Informazioni

Nei casi con temperature ambiente non previste in tabella contattare il ns. Servizio Tecnico. In caso di temperature inferiori a -30°C o superiori a 60°C occorre utilizzare anelli di tenuta con mescole speciali. Per i campi di funzionamento con temperature inferiori a 0°C occorre considerare quanto segue:

1. I motori devono essere idonei al funzionamento con temperatura ambiente prevista.
2. La potenza del motore elettrico deve essere adeguata al superamento delle maggiori coppie di avviamento richieste.
3. Nel caso di riduttori con cassa in ghisa prestare attenzione ai carichi d'urto in quanto la ghisa può presentare problemi di fragilità a temperature inferiori ai -15°C.
4. Durante le prime fasi di servizio possono insorgere problemi di lubrificazione causa l'elevata viscosità che assume l'olio e quindi è opportuno procedere ad alcuni minuti di rotazione a "vuoto".

Il cambio olio (prodotti NON Atex) deve essere eseguito dopo circa 10.000 ore/2 anni di funzionamento, questo periodo è in funzione del tipo di servizio e dell'ambiente in cui opera il riduttore. Per i gruppi forniti senza tappi per l'olio la lubrificazione si intende permanente e quindi non hanno necessità di alcuna manutenzione.

## 2.11.2 Lubrificanti

| | B 060 ÷ 160 | | BA40 ÷ A70 |
|---|---|---|---|
| | Olio minerale | | Olio minerale |
| *T°C ISO/SAE | (-5) ÷ (+40) ISO VG220 | (-15) ÷ (+25) ISO VG150 | (-5) ÷ (+40) SAE 85W-140 |
| ENI | BLASIA 220 | BLASIA 150 | ROTRA MP (85W-140) |
| SHELL | OMALA OIL220 | OMALA OIL150 | SPIRAX S2 A 85W-140 |
| KLUBER | Kluberoil GEM 1-220N | Kluberoil GEM 1-150N | Klubersynth GH 6-460 |
| MOBIL | MOBILGEAR 600 XP220 | MOBILGEAR 600 XP150 | - |
| CASTROL | ALPHA SP 220 | ALPHA SP 150 | - |
| BP | ENERGOL GR-XP220 | ENERGOL GR-XP150 | - |

Specifiche dei lubrificanti consigliati da Motovario S.p.A.

* Temperatura ambiente

Fornitura standard

## 2.11.3 Lubrificanti speciali

| | *T°C | Olio sintetico a basi di poliglicoli |
|---|---|---|
| **ENI** | **(-30) ÷ (+30)** | Blasia S 150 (ISO VG150) |
| | **(-20) ÷ (+40)** | Blasia S 220 (ISO VG220) |
| **MOBIL** | **(-45) ÷ (+0)** | SCH 624 (ISO VG32) |
| | **(-40) ÷ (+5)** | SCH 626 (ISO VG68) |
| **KLUBER** | **(-40) ÷ (+5)** | Klubersynth GH 6-32 (ISO VG32) |
| | **(-35) ÷ 10)** | Klubersynth GH 6-80 (ISO VG80) |
| | **(-30) ÷ (+40)** | Klubersynth GH 6-150 (ISO VG150) |
| | **(-25) ÷ (+40)** | Klubersynth GH 6-220 (ISO VG220) |
| | **(-15) ÷ (+50)** | Klubersynth GH 6-460 (ISO VG460) |
| | **(-10) ÷ (+70)** | Klubersynth GH 6-680 (ISO VG680) |

| | *T°C | Olio sintetico a basi di poliglicoli per settore alimentare |
|---|---|---|
| **KLUBER** | **(-30) ÷ (+15)** | Klubersynth UH1-6 100 (ISO VG100) |
| | **(-25) ÷ (+40)** | Klubersynth UH1-6 220 (ISO VG220) |
| | **(-15) ÷ (+40)** | Klubersynth UH1-6 320 (ISO VG320) |
| | **(-15) ÷ (+50)** | Klubersynth UH1-6 460 (ISO VG460) |
| | **(-10) ÷ (+50)** | Klubersynth UH1-6 680 (ISO VG680) |

Per l'utilizzo di lubrificanti speciali, contattare l'assistenza tecnica.

* Temperatura ambiente

## 2.11.4 Quantità

- Per i riduttori serie B occorre sempre specificare la posizione di piazzamento prevista.
- I riduttori serie BA.. a 2, 3 stadi e B060, vengono forniti completi di lubrificante, sono sprovvisti dei tappi olio e non hanno necessità di alcuna manutenzione.
- I riduttori serie B nelle grandezze 080, 100, 125, 140, 150, 160 vengono forniti completi di lubrificante e dei tappi olio necessari a garantire la corretta lubrificazione nella posizione di piazzamento richiesta.

Si raccomanda, effettuata l'installazione, di sostituire il tappo chiuso utilizzato per il trasporto con il tappo di sfiato fornito a corredo.

Quantità olio in litri ~

| B | A42 | A52 | A53 | A72 | A73 |
|---|---|---|---|---|---|
| B3 | 0,33 | 0,42 | 0,63 | 1 | 1,21 |
| B8 | | | | | |
| B6/B7 | | | | | |
| V5 | | | | | |
| V6 | | | | | |

| CB | A42 | A52 | A53 | A72 | A73 |
|---|---|---|---|---|---|
| B3 | 0,33 | 0,42 | 0,55 | 1 | 1,13 |
| B8 | | | | | |
| B6/B7 | | | | | |
| V5 | | | | | |
| V6 | | | | | |

| B-CB | 063 | 083 | 103 | 123 | 143 | 153 | 163 |
|---|---|---|---|---|---|---|---|
| B3 | 1,2 | 2,5 | 3,7 | 5,7 | 11,1 | 19 | 33 |
| B8 | 1,5 | 2,8 | 4,2 | 7,9 | 13 | 17,5 | 42,8 |
| B6 | 1,5 | 3,5 | 6 | 8,5 | 14,5 | 26 | 43 |
| B7 | 1,5 | 2,8 | 3,9 | 7,3 | 11,8 | 19 | 30 |
| V5 | 2,1 | 3,7 | 7 | 9,9 | 18,5 | 32,5 | 54,5 |
| V6 | 1,3 | 2,6 | 4,5 | 6,7 | 10,8 | 16,5 | 37,3 |

# 2.12 MOMENTI D'INERZIA



| BA-2/3 | J *1E-4 [Kg*m$^2$] |
|---|---|
| 40 | 1,1 |
| 50 | 1,2 |
| 70 | 3,4 |

| B | J *1E-4 [Kg*m$^2$] |
|---|---|
| 063 | 1,1 |
| 083 | 2,5 |
| 103 | 7,0 |
| 123 | 10,4 |
| 143 | 23,0 |
| 153 | 34,8 |
| 163 | 92,9 |

I seguenti valori sono solo indicativi. Sono riferiti a riduttori già predisposti con l'attacco motore PAM. I valori in tabella sono riferiti al massimo di quelli calcolati.

## 3.1.1 BA.2

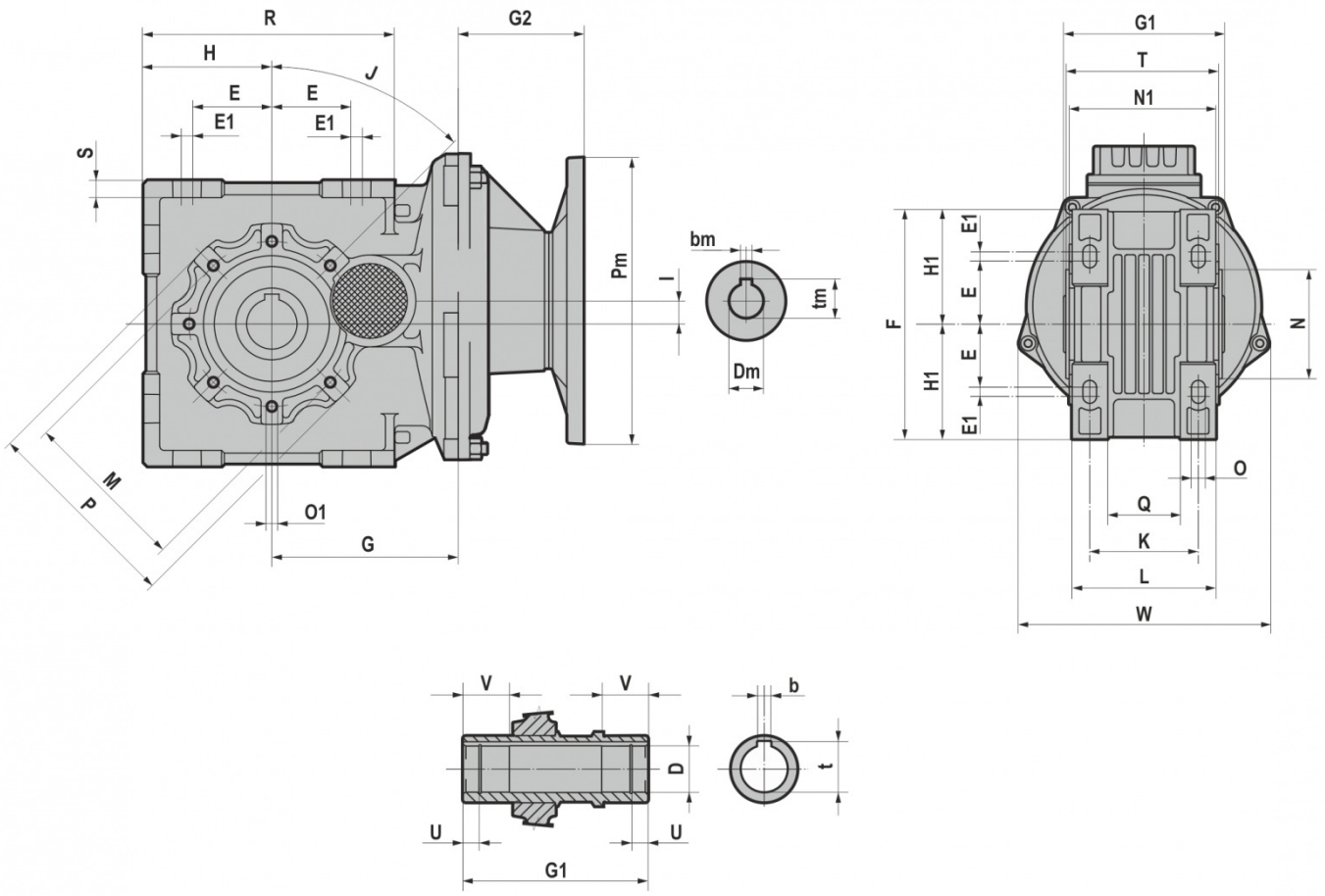


| | D | b | t | U | V | E | E1 | F | G | G1 | H | H1 | I | J |
|---|---|---|---|---|---|---|---|---|---|---|---|---|---|---|
| **A42** | 20 | 6 | 22,8 | / | 30 | 45 | / | 130 | 95 | 100 | 65 | 65 | 8 | 45 |
| **A52** | 25 | 8 | 28,3 | / | 30 | 55 | / | 160 | 98 | 112 | 80 | 80 | 4,2 | 45 |
| **A52** | 28 | 8 | 31,1 | / | 30 | 55 | / | 160 | 98 | 112 | 80 | 80 | 4,2 | 45 |
| **A72** | 35 | 10 | 38,3 | 12 | 35 | 55 | 8 | 200 | 129,5 | 140 | 90 | 100 | 16 | 45 |
| **A72** | 30 | 8 | 33,3 | 12 | 35 | 55 | 8 | 200 | 129,5 | 140 | 90 | 100 | 16 | 45 |

| | K | L | M | N | N1 | O | O1 | P | Q | R | S | T |
|---|---|---|---|---|---|---|---|---|---|---|---|---|
| **A42** | 73,5 | 90 | 85 | 70 | 92 | 9 | M8x12 n.4 | 100 | 45 | 127,5 | 8 | 97 |
| **A52** | 80 | 100 | 95 | 80 | 102 | 9 | M8x14 n.6 | 110 | 51 | 153 | 10 | 108 |
| **A72** | 94,5 | 125 | 115 | 95 | 130 | 12 | M8x14 n.7 | 136 | 63 | 175 | 12 | 136 |

# 3.1 RIDUTTORI/MOTORIDUTTORI

| | | G2 | |
|---|---|---|---|
| B5 | B14 | A42-A52 | A72 |
| 140x11 | 090x11 | 55 | / |
| 160x14 | 105x14 | 55 | / |
| 200x19 | 120x19 | 86 | 87,5 |
| 200x24 | 140x24 | 86 | 87,5 |
| 250x28 | 160x28 | / | 87,5 |

Per le dimensioni relative alla zona attacco motore (Pm, Dm, bm, tm) fare riferimento alla tabella "Flange di entrata".

## 3.1.2 BA.3

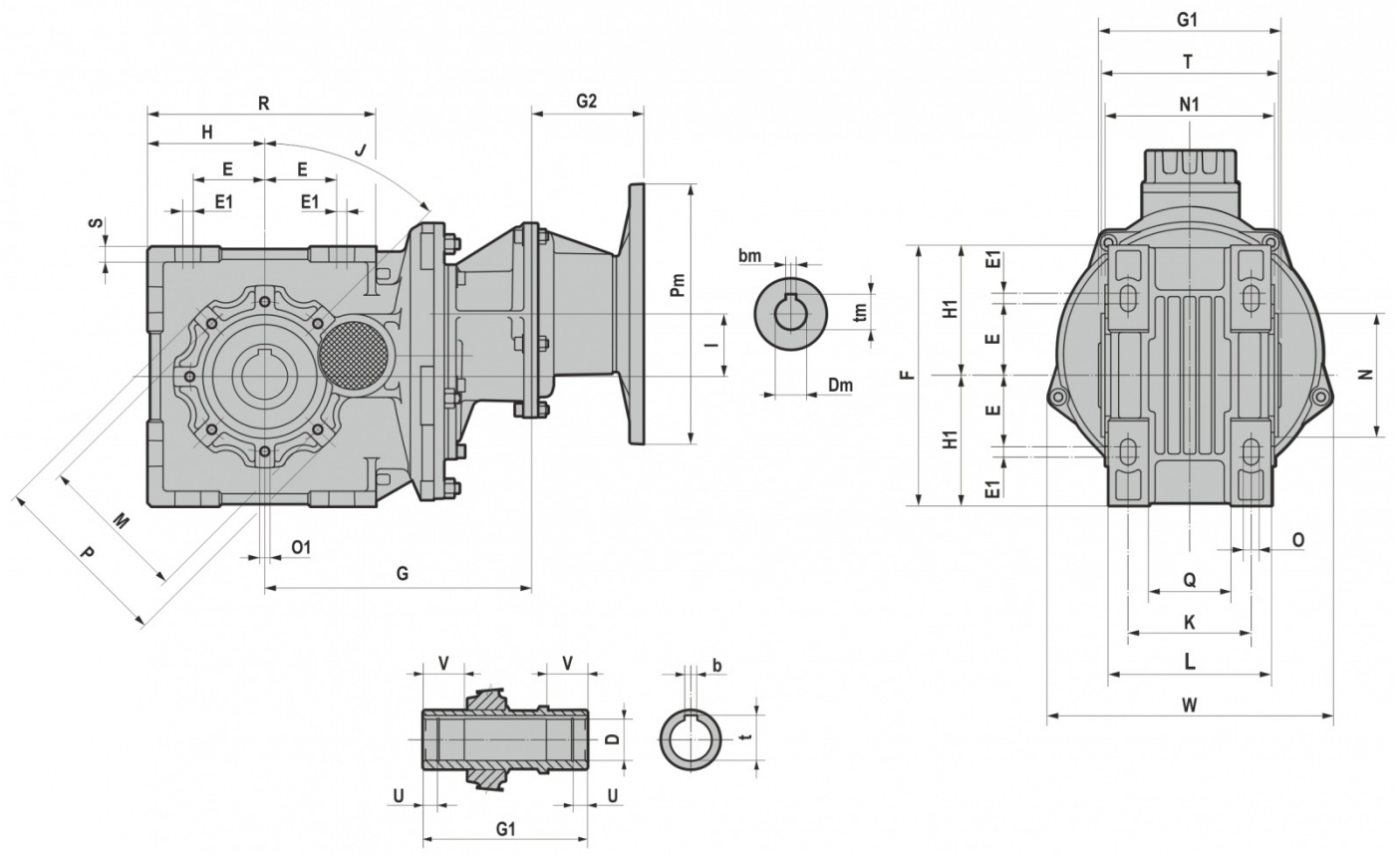


| | D | b | t | U | V | E | E1 | F | G | G1 | H | H1 | I | J |
|---|---|---|---|---|---|---|---|---|---|---|---|---|---|---|
| **A53** | 25 | 8 | 28,3 | / | 30 | 55 | / | 160 | 162 | 112 | 80 | 80 | 36,2 | 45 |
| **A53** | 28 | 8 | 31,1 | / | 30 | 55 | / | 160 | 162 | 112 | 80 | 80 | 36,2 | 45 |
| **A73** | 35 | 10 | 38,3 | 12 | 35 | 55 | 8 | 200 | 204,5 | 140 | 90 | 100 | 48 | 45 |
| **A73** | 30 | 8 | 33,3 | 12 | 35 | 55 | 8 | 200 | 204,5 | 140 | 90 | 100 | 48 | 45 |

| | K | L | M | N | N1 | O | O1 | P | Q | R | S | T | W |
|---|---|---|---|---|---|---|---|---|---|---|---|---|---|
| **A53** | 80 | 100 | 95 | 80 | 102 | 9 | M8x14 n.6 | 110 | 51 | 153 | 10 | 108 | 152 |
| **A73** | 94,5 | 125 | 115 | 95 | 130 | 12 | M8x14 n,7 | 136 | 63 | 175 | 12 | 136 | 218 |

| | | G2 |
|---|---|---|
| **B5** | **B14** | **A53-A73** |
| **140X11** | **090x11** | 55 |
| **160X14** | **105x14** | 55 |
| **200X19** | **120x19** | 86 |
| **200X24** | **140x24** | 86 |

Per le dimensioni relative alla zona attacco motore (Pm, Dm, bm, tm) fare riferimento alla tabella "Flange di entrata".

## 3.1.3 CBA.2

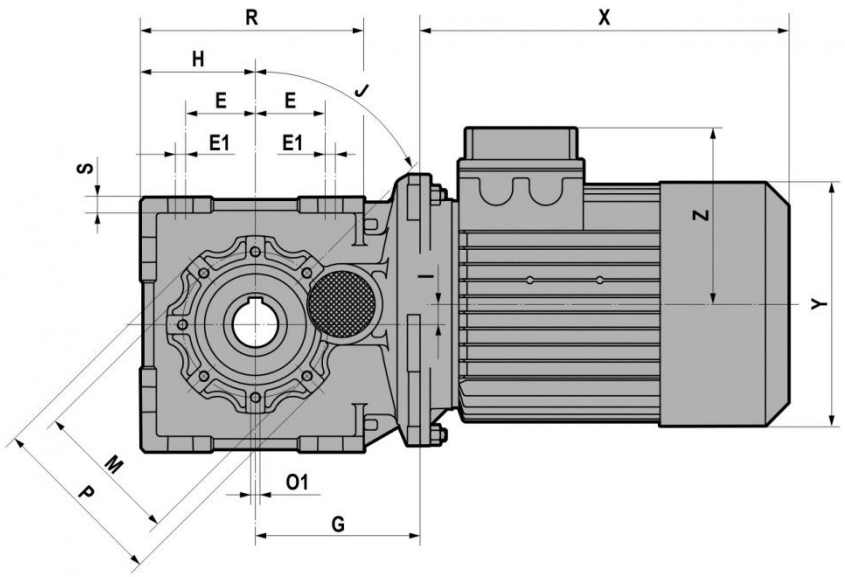


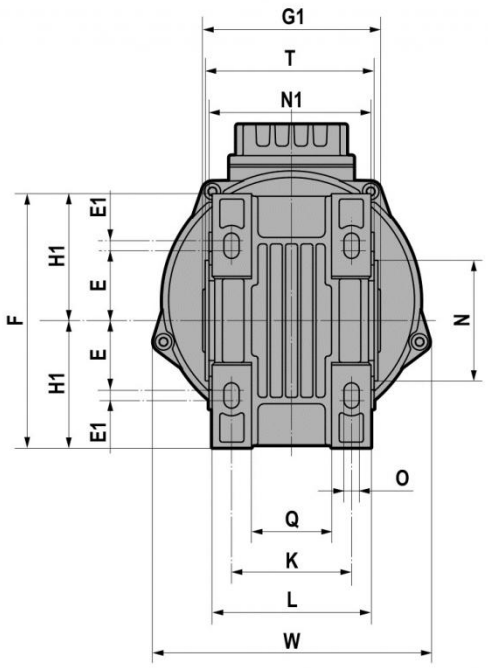


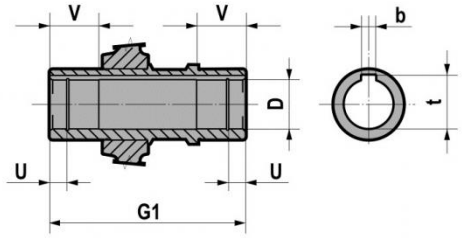


| | D | b | t | U | V | E | E1 | F | G | G1 | H | H1 | I | J |
|---|---|---|---|---|---|---|---|---|---|---|---|---|---|---|
| **A42** | 20 | 6 | 22,8 | / | 30 | 45 | / | 130 | 95 | 100 | 65 | 65 | 8 | 45 |
| **A52** | 25 | 8 | 28,3 | / | 30 | 55 | / | 160 | 98 | 112 | 80 | 80 | 4,2 | 45 |
| **A52** | 28 | 8 | 31,1 | / | 30 | 55 | / | 160 | 98 | 112 | 80 | 80 | 4,2 | 45 |
| **A72** | 35 | 10 | 38,3 | 12 | 35 | 55 | 8 | 200 | 129,5 | 140 | 90 | 100 | 16 | 45 |
| **A72** | 30 | 8 | 33,3 | 12 | 35 | 55 | 8 | 200 | 129,5 | 140 | 90 | 100 | 16 | 45 |

| | K | L | M | N | N1 | O | O1 | P | Q | R | S | T |
|---|---|---|---|---|---|---|---|---|---|---|---|---|
| **A42** | 73,5 | 90 | 85 | 70 | 92 | 9 | M8x12 n.4 | 100 | 45 | 127,5 | 8 | 97 |
| **A52** | 80 | 100 | 95 | 80 | 102 | 9 | M8x14 n.6 | 110 | 51 | 153 | 10 | 108 |
| **A72** | 94,5 | 125 | 115 | 95 | 130 | 12 | M8x14 n.7 | 136 | 63 | 175 | 12 | 136 |

# 3.1 RIDUTTORI/MOTORIDUTTORI



| T | | | | | | | | |
|---|---|---|---|---|---|---|---|---|
| | | 063 | 071 | 080 | 090S | 090L | 100 | 112 |
| A42-A52 | X | 180 | 205 | 223 | 237 | 262 | / | / |
| | Y | 121 | 139 | 158 | 173 | 173 | / | / |
| | Z | 104 | 112 | 122 | 130 | 130 | / | / |
| A72 | X | / | / | 218 | 232 | 257 | 290 | 302 |
| | Y | / | / | 158 | 173 | 173 | 191 | 211 |
| | Z | / | / | 122 | 130 | 130 | 139 | 154 |

| TB | | | | | | | | |
|---|---|---|---|---|---|---|---|---|
| | | 063 | 071 | 080 | 090S | 090L | 100 | 112 |
| A42-A52 | X | 238 | 270,5 | 294 | 313 | 338 | / | / |
| | Y | 121 | 139 | 158 | 173 | 173 | / | / |
| | Z | 119 | 129 | 137 | 157 | 157 | / | / |
| A72 | X | / | / | 290 | 309 | 334 | 372 | 400 |
| | Y | / | / | 158 | 173 | 173 | 191 | 211 |
| | Z | / | / | 137 | 157 | 157 | 168 | 183 |

## 3.1.4 CBA.3

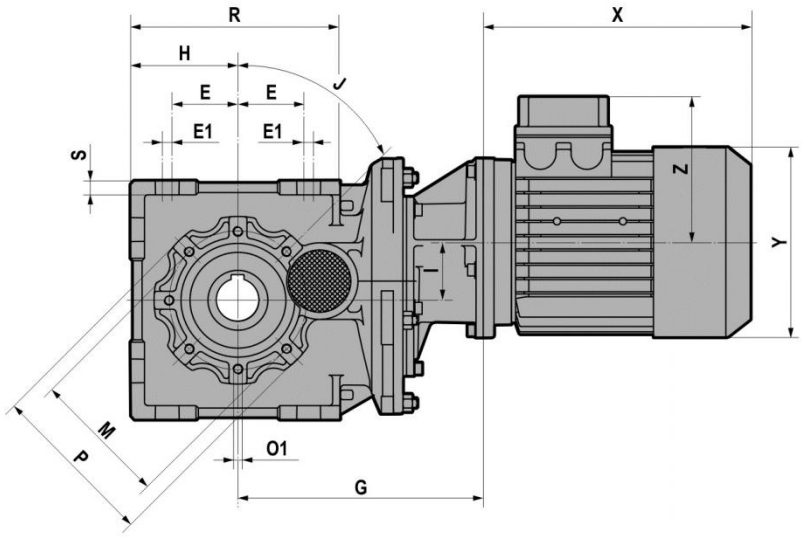


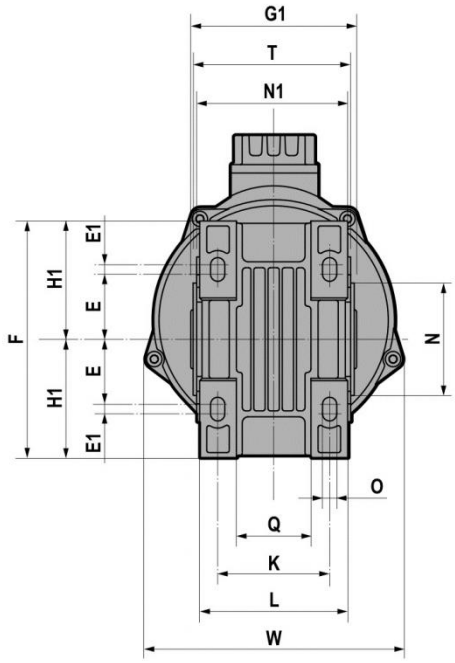


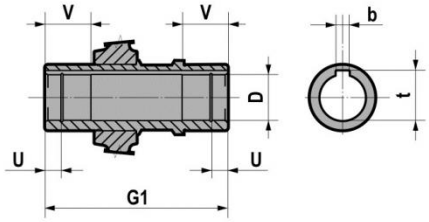


| | D | b | t | U | V | E | E1 | F | G | G1 | H | H1 | I | J |
|---|---|---|---|---|---|---|---|---|---|---|---|---|---|---|
| **A53** | 25 | 8 | 28,3 | / | 30 | 55 | / | 160 | 162 | 112 | 80 | 80 | 36,2 | 45 |
| **A53** | 28 | 8 | 31,1 | / | 30 | 55 | / | 160 | 162 | 112 | 80 | 80 | 36,2 | 45 |
| **A73** | 35 | 10 | 38,3 | 12 | 35 | 55 | 8 | 200 | 204,5 | 140 | 90 | 100 | 48 | 45 |
| **A73** | 30 | 8 | 33,3 | 12 | 35 | 55 | 8 | 200 | 204,5 | 140 | 90 | 100 | 48 | 45 |

| | K | L | M | N | N1 | O | O1 | P | Q | R | S | T | W |
|---|---|---|---|---|---|---|---|---|---|---|---|---|---|
| **A53** | 80 | 100 | 95 | 80 | 102 | 9 | M8x14 n.6 | 110 | 51 | 153 | 10 | 108 | 152 |
| **A73** | 94,5 | 125 | 115 | 95 | 130 | 12 | M8x14 n,7 | 136 | 63 | 175 | 12 | 136 | 218 |

| | | T | | | | | | |
|---|---|---|---|---|---|---|---|---|
| | | 063 | 071 | 080 | 090S | 090L | 100 | 112 |
| **A53-A73** | X | 180 | 205 | 223 | 237 | 262 | / | / |
| | Y | 121 | 139 | 158 | 173 | 173 | / | / |
| | Z | 104 | 112 | 122 | 130 | 130 | / | / |

# 3.1 RIDUTTORI/MOTORIDUTTORI



| TB | | | | | | | | |
|---|---|---|---|---|---|---|---|---|
| | | 063 | 071 | 080 | 090S | 090L | 100 | 112 |
| A53-A73 | X | 238 | 270,5 | 294 | 313 | 338 | / | / |
| | Y | 121 | 139 | 158 | 173 | 173 | / | / |
| | Z | 119 | 129 | 137 | 157 | 157 | / | / |

## 3.1.5 IBA.2

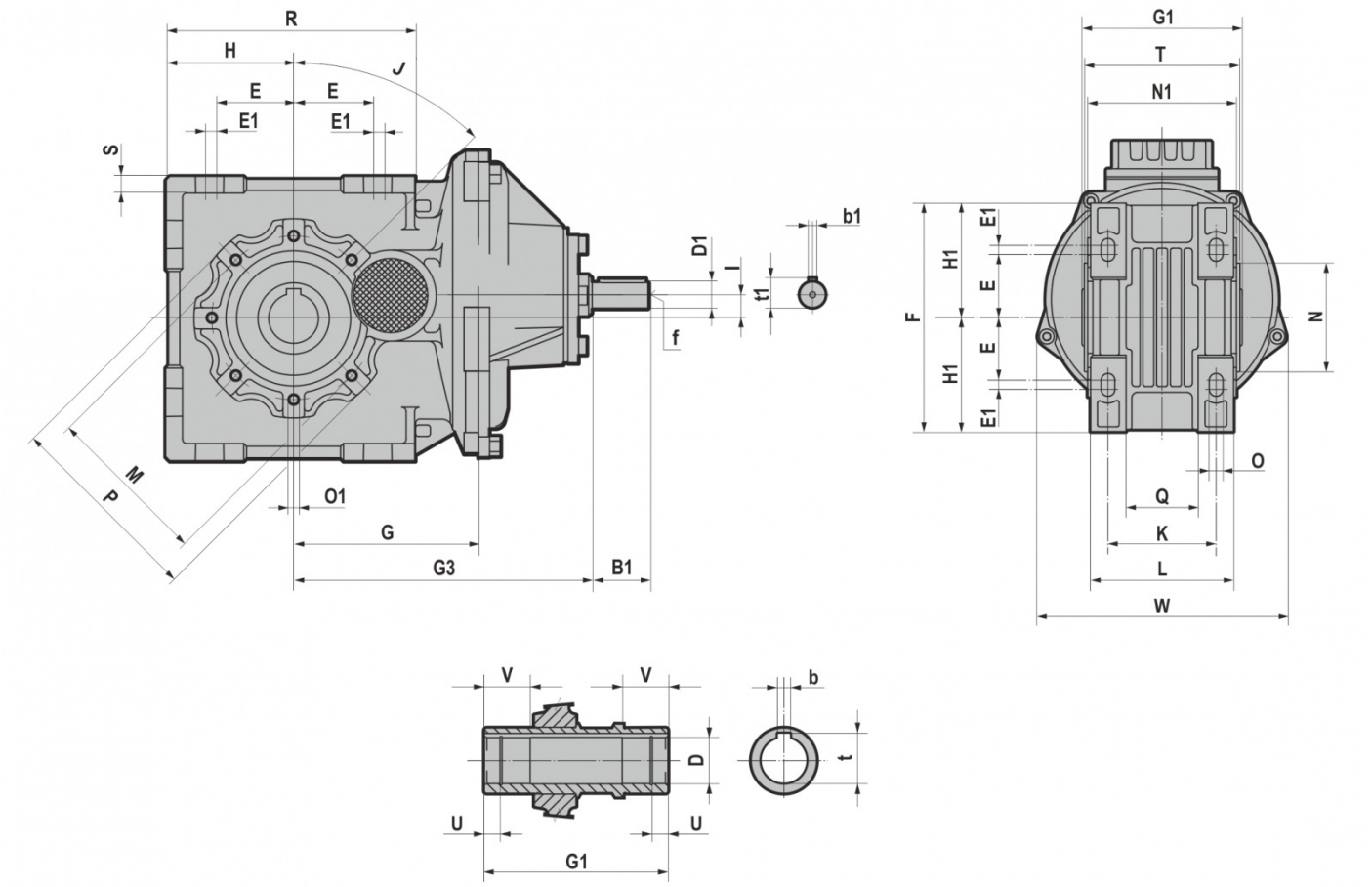


| | D | b | t | U | V | E | E1 | F | G | G1 | H | H1 | I | J |
|---|---|---|---|---|---|---|---|---|---|---|---|---|---|---|
| **A42** | 20 | 6 | 22,8 | / | 30 | 45 | / | 130 | 95 | 100 | 65 | 65 | 8 | 45 |
| **A52** | 25 | 8 | 28,3 | / | 30 | 55 | / | 160 | 98 | 112 | 80 | 80 | 4,2 | 45 |
| **A52** | 28 | 8 | 31,1 | / | 30 | 55 | / | 160 | 98 | 112 | 80 | 80 | 4,2 | 45 |
| **A72** | 35 | 10 | 38,3 | 12 | 35 | 55 | 8 | 200 | 129,5 | 140 | 90 | 100 | 16 | 45 |
| **A72** | 30 | 8 | 33,3 | 12 | 35 | 55 | 8 | 200 | 129,5 | 140 | 90 | 100 | 16 | 45 |

| | K | L | M | N | N1 | O | O1 | P | Q | R | S | T |
|---|---|---|---|---|---|---|---|---|---|---|---|---|
| **A42** | 73,5 | 90 | 85 | 70 | 92 | 9 | M8x12 n.4 | 100 | 45 | 127,5 | 8 | 97 |
| **A52** | 80 | 100 | 95 | 80 | 102 | 9 | M8x14 n.6 | 110 | 51 | 153 | 10 | 108 |
| **A72** | 94,5 | 125 | 115 | 95 | 130 | 12 | M8x14 n.7 | 136 | 63 | 175 | 12 | 136 |

| | G3 | D1 | B1 | b1 | t1 | f |
|---|---|---|---|---|---|---|
| **A42** | 175,5 | 16 | 40 | 5 | 18 | M6 |
| **A52** | 179 | 16 | 40 | 5 | 18 | M6 |
| **A72** | 210 | 19 | 40 | 6 | 21,5 | M6 |

## 3.1.6 IBA.3

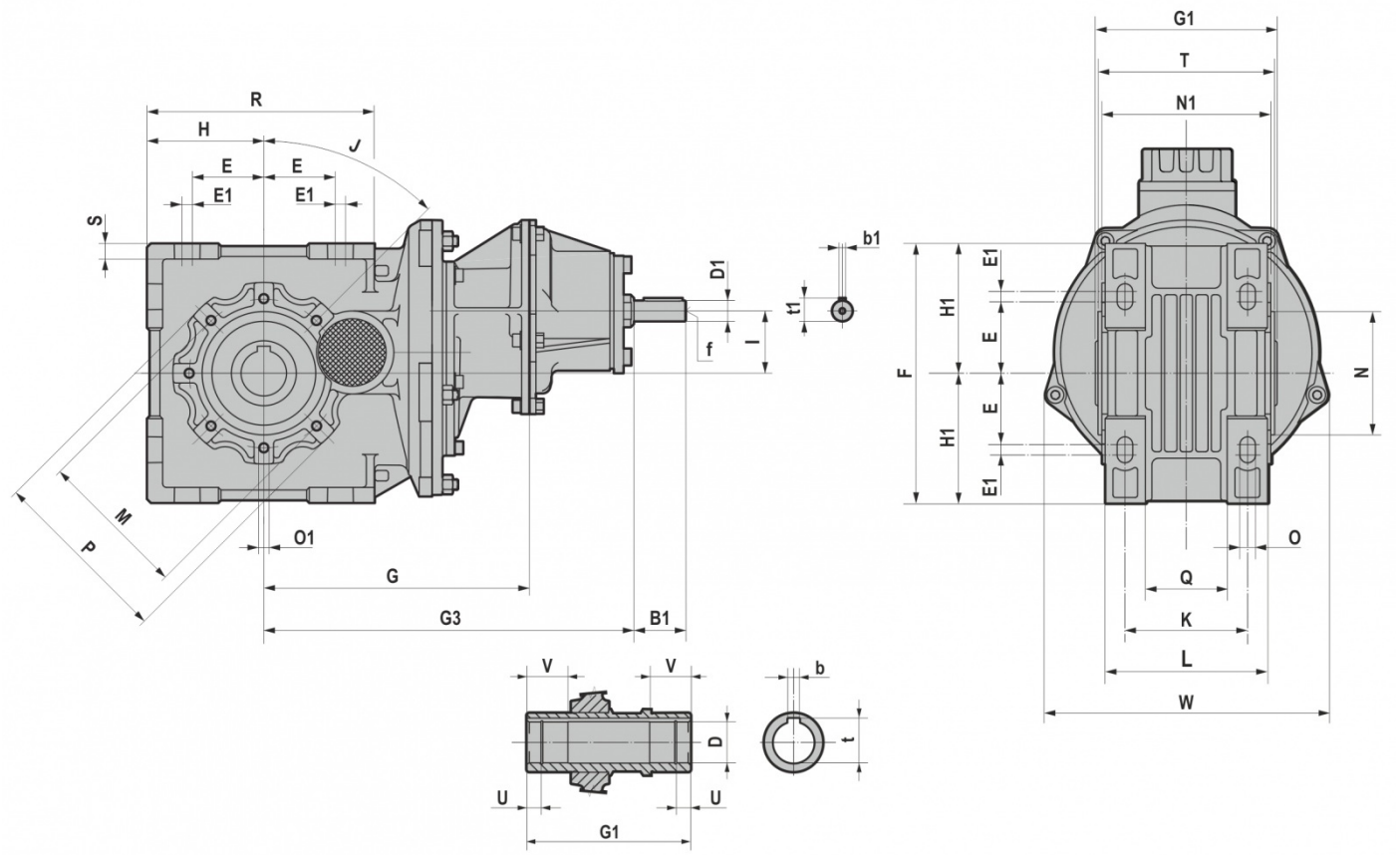


| | D | b | t | U | V | E | E1 | F | G | G1 | H | H1 | I | J |
|---|---|---|---|---|---|---|---|---|---|---|---|---|---|---|
| **A53** | 25 | 8 | 28,3 | / | 30 | 55 | / | 160 | 162 | 112 | 80 | 80 | 36,2 | 45 |
| **A53** | 28 | 8 | 31,1 | / | 30 | 55 | / | 160 | 162 | 112 | 80 | 80 | 36,2 | 45 |
| **A73** | 35 | 10 | 38,3 | 12 | 35 | 55 | 8 | 200 | 204,5 | 140 | 90 | 100 | 48 | 45 |
| **A73** | 30 | 8 | 33,3 | 12 | 35 | 55 | 8 | 200 | 204,5 | 140 | 90 | 100 | 48 | 45 |

| | K | L | M | N | N1 | O | O1 | P | Q | R | S | T | W |
|---|---|---|---|---|---|---|---|---|---|---|---|---|---|
| **A53** | 80 | 100 | 95 | 80 | 102 | 9 | M8x14 n.6 | 110 | 51 | 153 | 10 | 108 | 152 |
| **A73** | 94,5 | 125 | 115 | 95 | 130 | 12 | M8x14 n,7 | 136 | 63 | 175 | 12 | 136 | 218 |

| | G3 | D1 | B1 | b1 | t1 | f |
|---|---|---|---|---|---|---|
| **A53** | 242,5 | 16 | 40 | 5 | 18 | M6 |
| **A73** | 285 | 16 | 40 | 5 | 18 | M6 |

## 3.1.7 B

### B...F

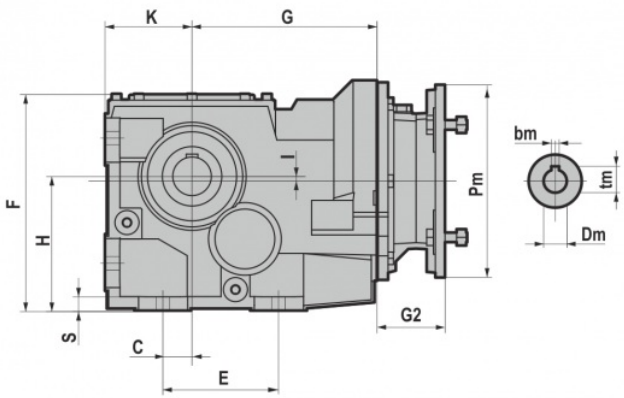
K
G
F
H
S
C
E
I
Pm
G2
bm
tm
Dm

### B...S

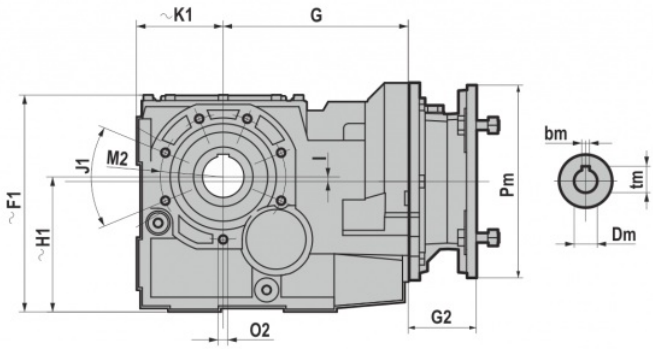
~K1
G
~F1
~H1
J1
M2
I
Pm
G2
O2
bm
tm
Dm

### B...U

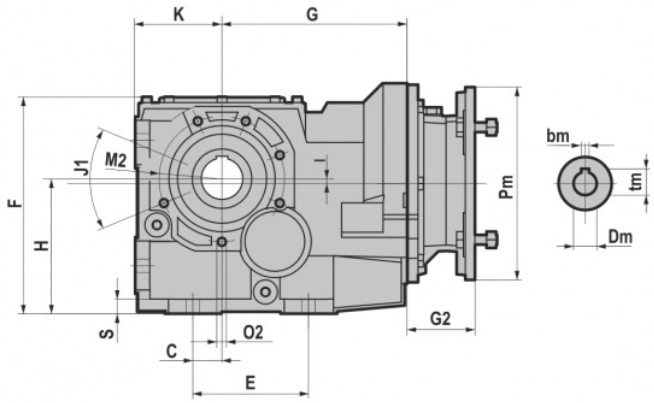
K
G
F
H
J1
M2
S
C
O2
E
I
Pm
G2
bm
tm
Dm

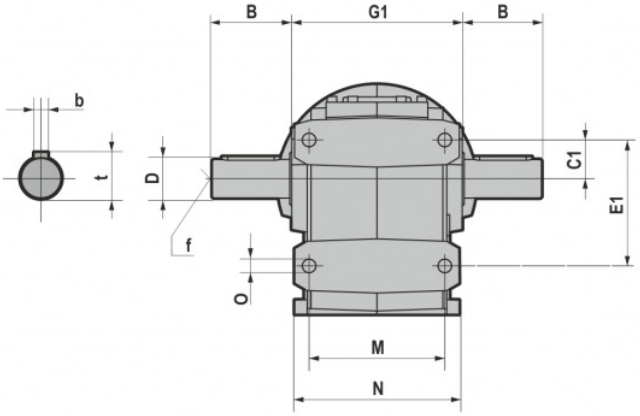
B
G1
B
b
t
D
f
O
C1
E1
M
N

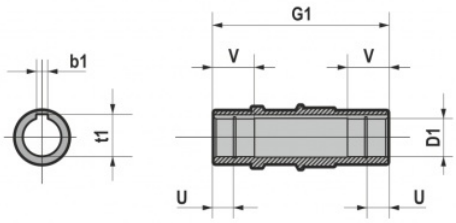
G1
b1
t1
V
V
D1
U
U

# 3.1 RIDUTTORI/MOTORIDUTTORI



| | D1 | b1 | t1 | U | V | B | D | b | t | f | C | C1 | E | E1 |
|---|---|---|---|---|---|---|---|---|---|---|---|---|---|---|
| **063** | 35 H7 | 10 | 38,3 | 12 | 35 | 58 | 35 k6 | 10 | 38 | M12 | 30 | 39 | 130 | 126 |
| **063** | 40 H7 | 12 | 43,3 | 12 | 35 | 58 | 35 k6 | 10 | 38 | M12 | 30 | 39 | 130 | 126 |
| **083** | 40 H7 | 12 | 43,3 | 22,25 | 42 | 80 | 40 k6 | 12 | 43 | M16 | 30 | 40 | 120 | 130 |
| **083** | 45 H7 | 14 | 47,6 | 22,25 | 42 | 80 | 40 k6 | 12 | 43 | M16 | 30 | 40 | 120 | 130 |
| **103** | 45 H7 | 14 | 48,8 | 22,25 | 50 | 100 | 50 k6 | 14 | 53,5 | M16 | 40 | 50 | 150 | 160 |
| **103** | 50 H7 | 14 | 53,8 | 25 | 50 | 100 | 50 k6 | 14 | 53,5 | M16 | 40 | 50 | 150 | 160 |
| **123** | 60 H7 | 18 | 64,4 | 28 | 70 | 120 | 60 m6 | 18 | 64 | M20 | 55 | 78 | 180 | 220 |
| **143** | 70 H7 | 20 | 74,9 | 27,5 | 75 | 140 | 70 m6 | 20 | 74,5 | M20 | 75 | 90 | 240 | 280 |
| **153** | 90 H7 | 25 | 95,4 | 34 | 90 | 170 | 90 m6 | 25 | 95 | M20 | 95 | 110 | 280 | 330 |
| **153** | 80 H7 | 22 | 85,4 | 34 | 90 | 170 | 90 m6 | 25 | 95 | M20 | 95 | 110 | 280 | 330 |
| **163** | 100 H7 | 28 | 106,4 | 40 | 100 | 210 | 110 m6 | 28 | 116 | M20 | 115 | 155 | 350 | 420 |

| | F | F1 | G | G1 | H | H1 | I | K | K1 | M | N | O | S | J1 | M2 | O2 |
|---|---|---|---|---|---|---|---|---|---|---|---|---|---|---|---|---|
| **063** | 215 | 219,5 | 174 | 140 | 132 | 137 | 33 | 88 | 92,5 | 104 | 126 | 14 | 12 | 45 | 130 | M10x20 (n.6) |
| **083** | 225 | 225 | 192 | 180 | 140 | 140 | 5 | 90 | 90 | 140 | 170 | 14 | 15 | 45 | 130 | M10x20 (n.6/7) |
| **103** | 283 | 283 | 213,5 | 210 | 180 | 180 | 25 | 112 | 112 | 165 | 205 | 18 | 18 | 45 | 165 | M12x22 (n.6/7) |
| **123** | 341 | 342 | 246 | 240 | 212 | 213 | 33,5 | 132 | 133 | 180 | 230 | 22 | 22 | 45 | 185 | M14x28 (n.7) |
| **143** | 414 | / | 279 | 300 | 265 | / | 34 | 160 | / | 240 | 290 | 22 | 22 | 45 | 200 | M14x30 (n.7) |
| **153** | 490 | / | 353 | 350 | 315 | / | 35 | 200 | / | 270 | 330 | 26 | 26 | 45 | 245 | M16x32 (n.7) |
| **163** | 615 | / | 426,5 | 445 | 375 | / | 47 | 230,5 | / | 330 | 400 | 38 | 45 | 45 | 298 | M18x40 (n.6) |

| | G2 | | | | |
|---|---|---|---|---|---|
| | **063** | **083-103** | **123-143** | **153** | **163** |
| **140x11** | 57 | / | / | / | / |
| **160x14** | 69,0 | / | / | / | / |
| **200x19** | 90,0 | 70,0 | 60,5 | / | / |
| **200x24** | 90,0 | 70,0 | 60,5 | / | / |
| **250x28** | 105,0 | 85,0 | 75,5 | / | / |
| **300x38** | / | 110,0 | 100,5 | 76,0 | / |
| **350x42** | / | 157,5 | 148,0 | 123,5 | 109,0 |
| **350x48** | / | 157,5 | 148,0 | 123,5 | 109,0 |
| **400x55** | / | / | 185,0 | 160,5 | 146,0 |
| **450x60** | / | / | / | 160,5 | 146,0 |
| **550*65** | / | / | / | / | 175,0 |
| **550*75** | / | / | / | / | 175,0 |

## 3.1.8 CB

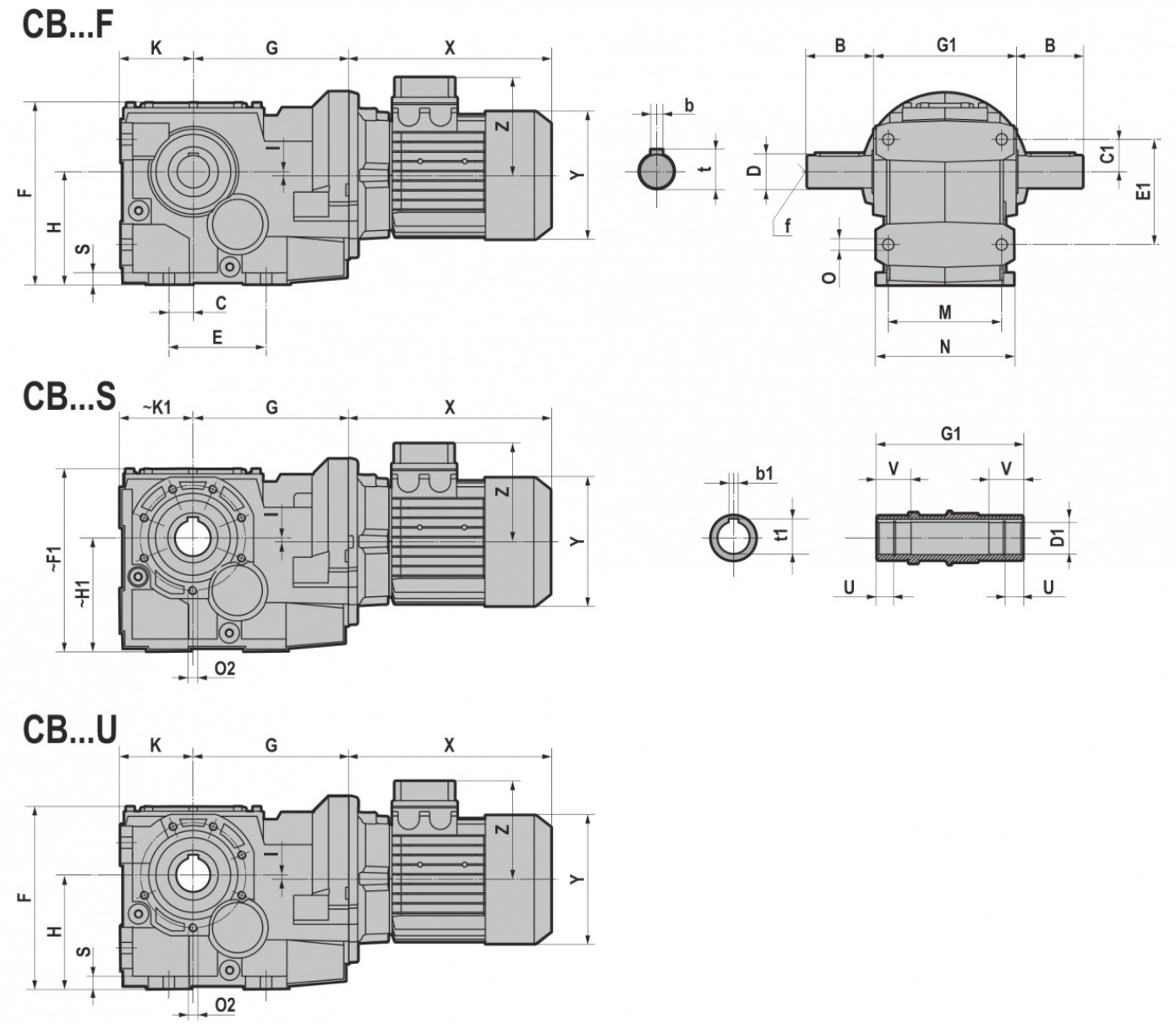


| | D1 | b1 | t1 | U | V | B | D | b | t | f | C | C1 | E | E1 |
|---|---|---|---|---|---|---|---|---|---|---|---|---|---|---|
| **063** | 35 H7 | 10 | 38,3 | 12 | 35 | 58 | 35 k6 | 10 | 38 | M12 | 30 | 39 | 130 | 126 |
| **063** | 40 H7 | 12 | 43,3 | 12 | 35 | 58 | 35 k6 | 10 | 38 | M12 | 30 | 39 | 130 | 126 |
| **083** | 40 H7 | 12 | 43,3 | 22,25 | 42 | 80 | 40 k6 | 12 | 43 | M16 | 30 | 40 | 120 | 130 |
| **083** | 45 H7 | 14 | 47,6 | 22,25 | 42 | 80 | 40 k6 | 12 | 43 | M16 | 30 | 40 | 120 | 130 |
| **103** | 45 H7 | 14 | 48,8 | 22,25 | 50 | 100 | 50 k6 | 14 | 53,5 | M16 | 40 | 50 | 150 | 160 |
| **103** | 50 H7 | 14 | 53,8 | 25 | 50 | 100 | 50 k6 | 14 | 53,5 | M16 | 40 | 50 | 150 | 160 |
| **123** | 60 H7 | 18 | 64,4 | 28 | 70 | 120 | 60 m6 | 18 | 64 | M20 | 55 | 78 | 180 | 220 |
| **143** | 70 H7 | 20 | 74,9 | 27,5 | 75 | 140 | 70 m6 | 20 | 74,5 | M20 | 75 | 90 | 240 | 280 |

# 3.1 RIDUTTORI/MOTORIDUTTORI



| | F | F1 | G | G1 | H | H1 | I | K | K1 | M | N | O | S | J1 | M2 | O2 |
|---|---|---|---|---|---|---|---|---|---|---|---|---|---|---|---|---|
| **063** | 215 | 219,5 | 174 | 140 | 132 | 137 | 33 | 88 | 92,5 | 104 | 126 | 14 | 12 | 45 | 130 | M10x20 (n.6) |
| **083** | 225 | 225 | 192 | 180 | 140 | 140 | 5 | 90 | 90 | 140 | 170 | 14 | 15 | 45 | 130 | M10x20 (n.6/7) |
| **103** | 283 | 283 | 213,5 | 210 | 180 | 180 | 25 | 112 | 112 | 165 | 205 | 18 | 18 | 45 | 165 | M12x22 (n.6/7) |
| **123** | 341 | 342 | 246 | 240 | 212 | 213 | 33,5 | 132 | 133 | 180 | 230 | 22 | 22 | 45 | 185 | M14x28 (n.7) |
| **143** | 414 | / | 279 | 300 | 265 | / | 34 | 160 | / | 240 | 290 | 22 | 22 | 45 | 200 | M14x30 (n.7) |

| T | | | | | | | | | | |
|---|---|---|---|---|---|---|---|---|---|---|
| | | 063 | 071 | 080 | 090S | 090L | 100 | 112 | 132S | 132M |
| **063** | X | 215 | 241 | 268 | 296 | 321 | 333 | 351 | / | / |
| | Y | 121 | 139 | 158 | 173 | 173 | 191 | 211 | / | / |
| | Z | 104 | 112 | 122 | 130 | 130 | 139 | 154 | / | / |
| **083 - 103** | X | / | 221 | 248 | 276 | 301 | 335 | 356 | 405 | 443 |
| | Y | / | 139 | 158 | 173 | 173 | 191 | 211 | 249 | 249 |
| | Z | / | 112 | 122 | 130 | 130 | 139 | 154 | 194 | 194 |
| **123 - 143** | X | / | / | / | 267 | 292 | 326 | 347 | 396 | 434 |
| | Y | / | / | / | 173 | 173 | 191 | 211 | 249 | 249 |
| | Z | / | / | / | 130 | 130 | 139 | 154 | 194 | 194 |

| TB | | | | | | | | | | |
|---|---|---|---|---|---|---|---|---|---|---|
| | | 063 | 071 | 080 | 090S | 090L | 100 | 112 | 132S | 132M |
| **063** | X | 273 | 307 | 341 | 373 | 398 | 415 | 448 | / | / |
| | Y | 121 | 139 | 158 | 173 | 173 | 191 | 211 | / | / |
| | Z | 119 | 129 | 137 | 157 | 157 | 168 | 183 | / | / |
| **083 - 103** | X | / | 287 | 321 | 353 | 378 | 417 | 453 | 505 | 547 |
| | Y | / | 139 | 158 | 173 | 173 | 191 | 211 | 249 | 249 |
| | Z | / | 129 | 137 | 157 | 157 | 168 | 183 | 230 | 230 |
| **123 - 143** | X | / | / | / | 343 | 368 | 407 | 443 | 495 | 537 |
| | Y | / | / | / | 173 | 173 | 191 | 211 | 249 | 249 |
| | Z | / | / | / | 157 | 157 | 168 | 183 | 230 | 230 |

## 3.1.9 IB

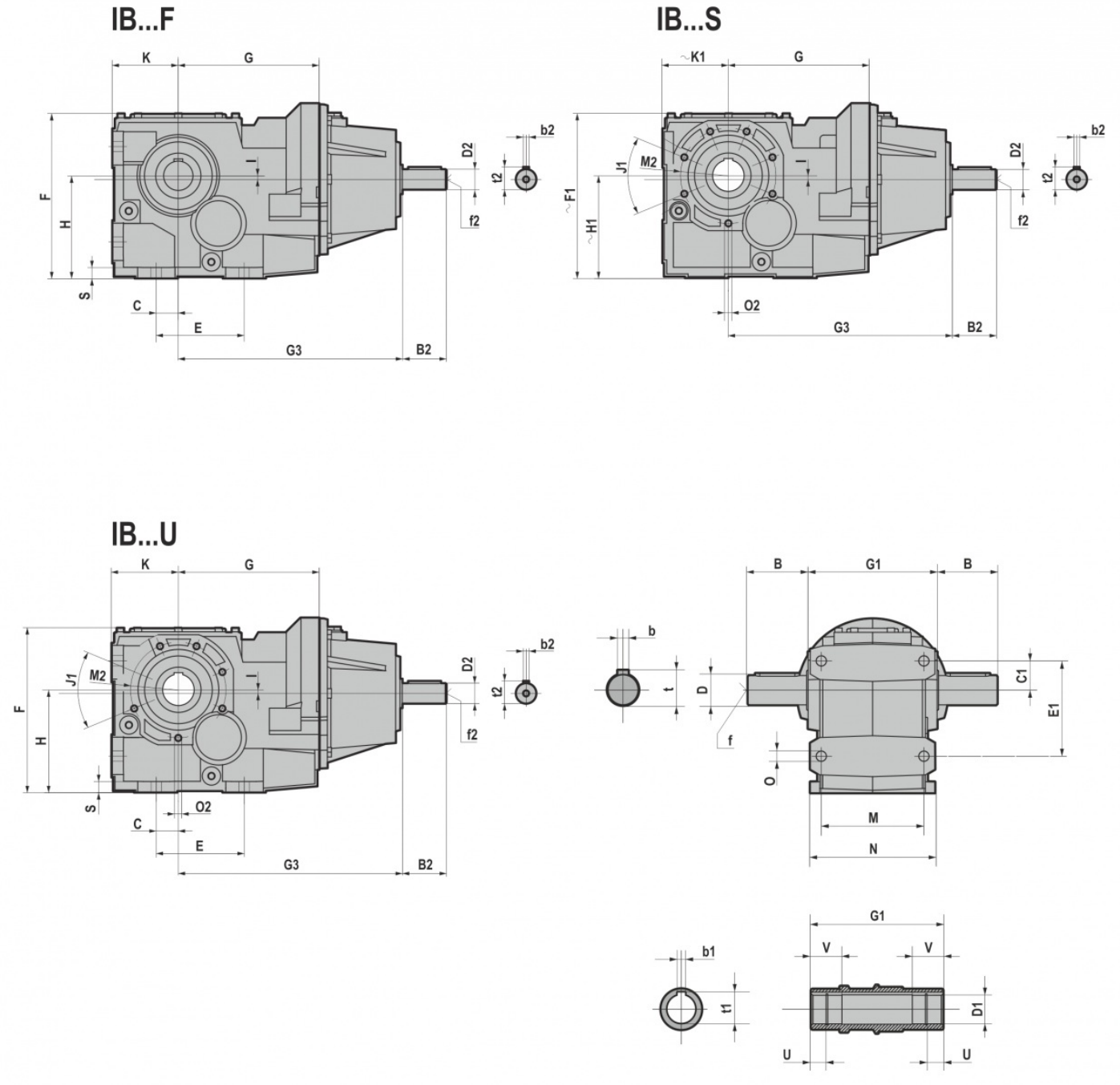
IB...F
K
G
F
H
S
C
E
G3
B2
D2
f2
t2
b2
I
IB...S
~K1
G
~F1
~H1
J1
M2
O2
G3
B2
D2
f2
t2
b2
IB...U
K
G
F
H
J1
M2
S
C
O2
E
G3
B2
D2
f2
t2
b2
I
b
t
D
f
O
B
G1
B
C1
E1
M
N
b1
t1
G1
V
V
D1
U
U

# 3.1 RIDUTTORI/MOTORIDUTTORI



| | D1 | b1 | t1 | U | V | B | D | b | t | f | C | C1 | E | E1 |
|---|---|---|---|---|---|---|---|---|---|---|---|---|---|---|
| 063 | 35 H7 | 10 | 38,3 | 12 | 35 | 58 | 35 k6 | 10 | 38 | M12 | 30 | 39 | 130 | 126 |
| 063 | 40 H7 | 12 | 43,3 | 12 | 35 | 58 | 35 k6 | 10 | 38 | M12 | 30 | 39 | 130 | 126 |
| 083 | 40 H7 | 12 | 43,3 | 22,25 | 42 | 80 | 40 k6 | 12 | 43 | M16 | 30 | 40 | 120 | 130 |
| 083 | 45 H7 | 14 | 47,6 | 22,25 | 42 | 80 | 40 k6 | 12 | 43 | M16 | 30 | 40 | 120 | 130 |
| 103 | 45 H7 | 14 | 48,8 | 22,25 | 50 | 100 | 50 k6 | 14 | 53,5 | M16 | 40 | 50 | 150 | 160 |
| 103 | 50 H7 | 14 | 53,8 | 25 | 50 | 100 | 50 k6 | 14 | 53,5 | M16 | 40 | 50 | 150 | 160 |
| 123 | 60 H7 | 18 | 64,4 | 28 | 70 | 120 | 60 m6 | 18 | 64 | M20 | 55 | 78 | 180 | 220 |
| 143 | 70 H7 | 20 | 74,9 | 27,5 | 75 | 140 | 70 m6 | 20 | 74,5 | M20 | 75 | 90 | 240 | 280 |
| 153 | 90 H7 | 25 | 95,4 | 34 | 90 | 170 | 90 m6 | 25 | 95 | M20 | 95 | 110 | 280 | 330 |
| 153 | 80 H7 | 22 | 85,4 | 34 | 90 | 170 | 90 m6 | 25 | 95 | M20 | 95 | 110 | 280 | 330 |
| 163 | 100 H7 | 28 | 106,4 | 40 | 100 | 210 | 110 m6 | 28 | 116 | M20 | 115 | 155 | 350 | 420 |

| | F | F1 | G | G1 | H | H1 | I | K | K1 | M | N | O | S | J1 | M2 | O2 |
|---|---|---|---|---|---|---|---|---|---|---|---|---|---|---|---|---|
| 063 | 215 | 219,5 | 174 | 140 | 132 | 137 | 33 | 88 | 92,5 | 104 | 126 | 14 | 12 | 45 | 130 | M10x20 (n.6) |
| 083 | 225 | 225 | 192 | 180 | 140 | 140 | 5 | 90 | 90 | 140 | 170 | 14 | 15 | 45 | 130 | M10x20 (n.6/7) |
| 103 | 283 | 283 | 213,5 | 210 | 180 | 180 | 25 | 112 | 112 | 165 | 205 | 18 | 18 | 45 | 165 | M12x22 (n.6/7) |
| 123 | 341 | 342 | 246 | 240 | 212 | 213 | 33,5 | 132 | 133 | 180 | 230 | 22 | 22 | 45 | 185 | M14x28 (n.7) |
| 143 | 414 | / | 279 | 300 | 265 | / | 34 | 160 | / | 240 | 290 | 22 | 22 | 45 | 200 | M14x30 (n.7) |
| 153 | 490 | / | 353 | 350 | 315 | / | 35 | 200 | / | 270 | 330 | 26 | 26 | 45 | 245 | M16x32 (n.7) |
| 163 | 615 | / | 426,5 | 445 | 375 | / | 47 | 230,5 | / | 330 | 400 | 38 | 45 | 45 | 298 | M18x40 (n.6) |

| | G3 | B2 | D2 | b2 | t2 | f2 |
|---|---|---|---|---|---|---|
| 063 | 264 | 50 | 24 j6 | 8 | 27 | M8 |
| 083 | 305 | 60 | 28 j6 | 8 | 31 | M10 |
| 103 | 326,5 | 60 | 28 j6 | 8 | 31 | M10 |
| 123 | 372,5 | 80 | 38 k6 | 10 | 41 | M12 |
| 143 | 405,5 | 80 | 38 k6 | 10 | 41 | M12 |
| 153 | 493 | 110 | 42 k6 | 12 | 45 | M16 |
| 163 | 561,5 | 110 | 48 k6 | 14 | 51,5 | M16 |

# 3.2 FLANGE DI ENTRATA



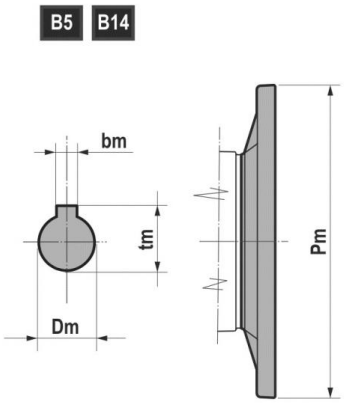


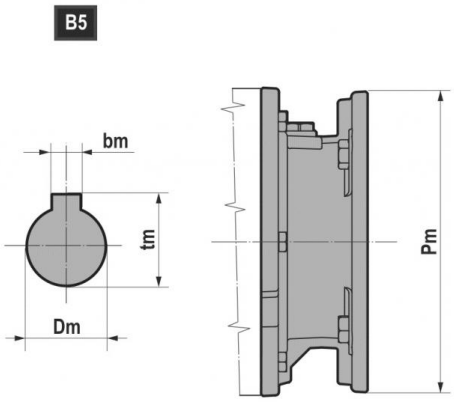


| B5 | Pm | Dm | bm | tm |
|---|---|---|---|---|
| 056 | 120 | 09 | 3 | 10,4 |
| 063 | 140 | 11 | 4 | 12,8 |
| 071 | 160 | 14 | 5 | 16,3 |
| 080 | 200 | 19 | 6 | 21,8 |
| 090 | 200 | 24 | 8 | 27,3 |
| 100 | 250 | 28 | 8 | 31,3 |
| 112 | 250 | 28 | 8 | 31,3 |
| 132 | 300 | 38 | 10 | 41,3 |
| 160 | 350 | 42 | 12 | 45,3 |
| 180 | 350 | 48 | 14 | 51,8 |
| 200 | 400 | 55 | 16 | 59,3 |
| 225 | 450 | 60 | 18 | 64,4 |
| 250 | 550 | 65 | 18 | 69,4 |
| 280 | 550 | 75 | 20 | 79,9 |

| B14 | Pm | Dm | bm | tm |
|---|---|---|---|---|
| 056 | 80 | 09 | 3 | 10,4 |
| 063 | 90 | 11 | 4 | 12,8 |
| 071 | 105 | 14 | 5 | 16,3 |
| 080 | 120 | 19 | 6 | 21,8 |
| 090 | 140 | 24 | 8 | 27,3 |
| 100 | 160 | 28 | 8 | 31,3 |
| 112 | 160 | 28 | 8 | 31,3 |

## 3.3.1 Motori elettrici

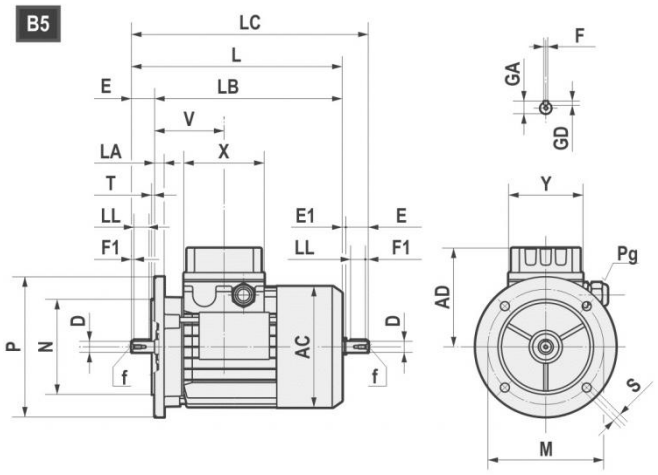


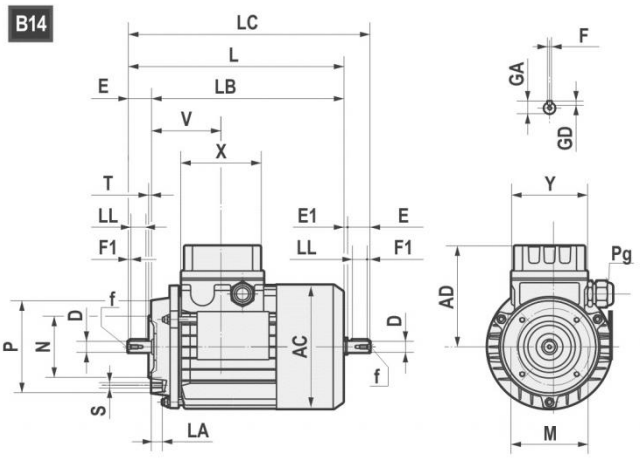


| | AC | AD | L | LB | LC | X | Y | V | D | E | E1 | f | F1 | GA | F | GD |
|---|---|---|---|---|---|---|---|---|---|---|---|---|---|---|---|---|
| **063** | 121 | 104 | 211 | 188 | 235,5 | 80 | 74 | 69 | 11 j6 | 23 | 1,5 | M4x10 | 2,5 | 12,5 | 4 | 4 |
| **071** | 139 | 112 | 238,5 | 208,5 | 271 | 80 | 74 | 74,5 | 14 j6 | 30 | 2,5 | M5x12.5 | 3 | 16 | 5 | 5 |
| **080** | 158 | 122 | 272,5 *(296) | 232,5 *(256) | 314 *(337) | 80 | 74 | 78 | 19 j6 | 40 | 1,5 | M6x16 | 5 | 21,5 | 6 | 6 |
| **90S** | 173 | 146 | 298 *(331) | 248 *(281) | 349,5 *(381) | 98 | 98 | 89,5 | 24 j6 | 50 | 1,5 | M8x19 | 5 | 27 | 8 | 7 |
| **90L** | 173 | 146 | 323 *(356) | 273 *(306) | 374,5 *(408) | 98 | 98 | 89,5 | 24 j6 | 50 | 1,5 | M8x19 | 5 | 27 | 8 | 7 |
| **100** | 191 | 155 | 368 | 308 | 431,5 | 98 | 98 | 97,5 | 28 j6 | 60 | 3,5 | M10x22 | 7,5 | 31 | 8 | 7 |
| **112** | 211 | 170 | 382,5 *(408) | 322,5 *(348) | 447 *(472) | 98 | 98 | 100 | 28 j6 | 60 | 3,5 | M10x22 | 7,5 | 31 | 8 | 7 |
| **132S** | 249 | 195 | 452 | 372 | 536,5 | 118 | 118 | 115,5 | 38 k6 | 80 | 4 | M12x28 | 10 | 41 | 10 | 8 |
| **132L** | 249 | 195 | 490 | 410 | 574,5 | 118 | 118 | 115,5 | 38 k6 | 80 | 4 | M12x28 | 10 | 41 | 10 | 8 |
| **160S** | 249 | 195 | 520 | 410 | / | 118 | 118 | 115,5 | 42k6 | 100 | / | M16x36 | 10 | 45 | 12 | 8 |

*TP80B4,TP90S4, TP90L4, TP90S6, TP112M4, TP112M6

# 3.3 MOTORI ELETTRICI



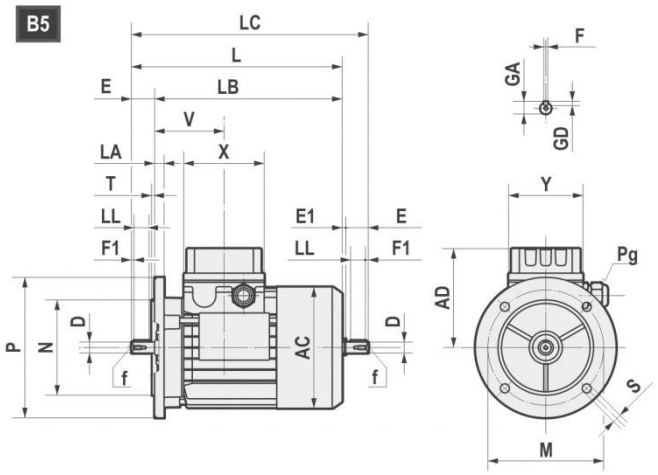


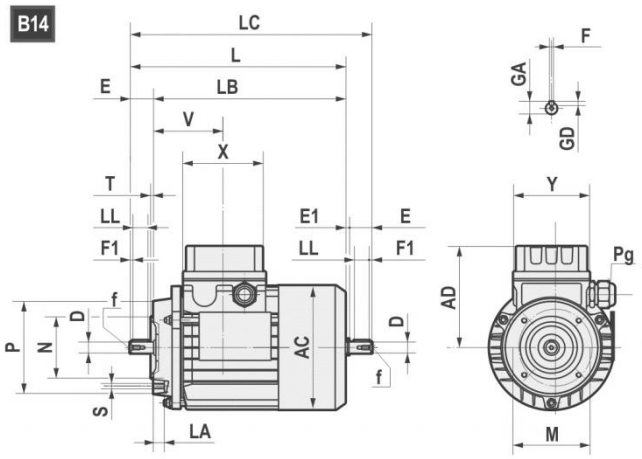


| | | AC | AD | L | LB | X | D | E | f | GA | F | GD | LL | Pg | |
|---|---|---|---|---|---|---|---|---|---|---|---|---|---|---|---|
| **160M** | 2-4-6 | 314 | 251 | 600 | 490 | 158 | 42 | 110 | M16 | 45 | 12 | 8 | 90 | 2-M40x1,5 | 1-M16x1,5 |
| **160L** | 2-4-6 | 314 | 251 | 645 | 535 | 158 | 42 | 110 | M16 | 45 | 12 | 8 | 90 | 2-M40x1,5 | 1-M16x1,5 |
| **180M** | 2-4 | 355 | 267 | 680 | 570 | 158 | 48 | 110 | M16 | 51,5 | 14 | 9 | 100 | 2-M40x1,5 | 1-M16x1,5 |
| **180L** | 4-6 | 355 | 267 | 720 | 610 | 158 | 48 | 110 | M16 | 51,5 | 14 | 9 | 100 | 2-M40x1,5 | 1-M16x1,5 |
| **200L** | 2-4-6 | 397 | 300 | 785 | 675 | 187 | 55 | 110 | M20 | 59 | 16 | 10 | 100 | 2-M50x1,5 | 1-M16x1,5 |
| **225S** | 4 | 446 | 325 | 820 | 680 | 187 | 60 | 140 | M20 | 64 | 18 | 11 | 125 | 2-M50x1,5 | 1-M16x1,5 |
| **225M** | 2 | 446 | 325 | 815 | 705 | 187 | 55 | 110 | M20 | 59 | 16 | 10 | 100 | 2-M50x1,5 | 1-M16x1,5 |
| **225M** | 4-6 | 446 | 325 | 845 | 705 | 187 | 60 | 140 | M20 | 64 | 18 | 11 | 125 | 2-M50x1,5 | 1-M16x1,5 |
| **250M** | 2-4-6 | 485 | 360 | 910 | 770 | 238 | 60 | 140 | M20 | 64 | 18 | 11 | 125 | 2-M63x1,5 | 1-M16x1,5 |
| **250M** | 2-4-6 | 485 | 360 | 910 | 770 | 238 | 65 | 140 | M20 | 69 | 18 | 11 | 125 | 2-M63x1,5 | 1-M16x1,5 |
| **280S** | 2-4-6 | 547 | 390 | 970 | 830 | 238 | 65 | 140 | M20 | 69 | 18 | 11 | 125 | 2-M63x1,5 | 1-M16x1,5 |
| **280S** | 2-4-6 | 547 | 390 | 970 | 830 | 238 | 75 | 140 | M20 | 79,5 | 20 | 12 | 125 | 2-M63x1,5 | 1-M16x1,5 |
| **280M** | 2-4-6 | 547 | 390 | 1025 | 885 | 238 | 65 | 140 | M20 | 69 | 18 | 11 | 125 | 2-M63x1,5 | 1-M16x1,5 |
| **280M** | 2-4-6 | 547 | 390 | 1025 | 885 | 238 | 75 | 140 | M20 | 79,5 | 20 | 12 | 125 | 2-M63x1,5 | 1-M16x1,5 |

# 3.3 MOTORI ELETTRICI



| B5 | M | N | P | LA | S | T |
|---|---|---|---|---|---|---|
| 063 | 115 | 95 | 140 | 10 | 9 | 3 |
| 071 | 130 | 110 | 160 | 10 | 9,5 | 3,5 |
| 080 | 165 | 130 | 200 | 12 | 11 | 3,5 |
| 090 | 165 | 130 | 200 | 12 | 11 | 3,5 |
| 100 | 215 | 180 | 250 | 15 | 14 | 4 |
| 112 | 215 | 180 | 250 | 14,5 | 14 | 4 |
| 132 | 265 | 230 | 300 | 20 | 14 | 3,5 |
| 160S | 300 | 250 | 350 | 13 | 18,5 | 3,5 |
| 160M-L | 300 | 250 | 350 | 13 | 19 | 5 |
| 180 | 300 | 250 | 350 | 15 | 19 | 5 |
| 200 | 350 | 300 | 400 | 17 | 19 | 5 |
| 225 | 400 | 350 | 450 | 20 | 19 | 5 |
| 250 | 500 | 450 | 550 | 22 | 19 | 5 |
| 280 | 500 | 450 | 550 | 22 | 19 | |

| B14 | M | N | P | LA | S | T |
|---|---|---|---|---|---|---|
| 063 | 75 | 60 | 90 | 10 | M5 | 2,5 |
| 071 | 85 | 70 | 105 | 10,5 | M6 | 2,5 |
| 080 | 100 | 80 | 120 | 10,5 | M6 | 3 |
| 090 | 115 | 95 | 140 | 11,5 | M8 | 3 |
| 100 | 130 | 110 | 160 | 15 | M8 | 3,5 |
| 112 | 130 | 110 | 160 | 11,5 | M8 | 3,5 |
| 132 | 165 | 130 | 200 | 20,5 | M10 | 3,5 |
| 160 | 215 | 180 | 250 | - | M12 | 4 |

## 3.3.2 Potenza nominale - kW

| | 63A | 63B | 63C | 71A | 71B | 71C | 80A | | | 80B | | |
|---|---|---|---|---|---|---|---|---|---|---|---|---|
| **Poli** | TS | TS | TS | TS | TS | TS | TS | TH | TP | TS | TH | TP |
| **2 (*)** | 0,18 | 0,25 | 0,37 | 0,37 | 0,55 | - | - | 0,75 | 0,75 | - | 1,1 | 1,1 |
| **4 (*)** | 0,12 | 0,18 | 0,22 | 0,25 | 0,37 | 0,55 | 0,55 | - | - | - | 0,75 | 0,75 |
| **6 (*)** | 0,09 | 0,12 | 0,15 | 0,18 | 0,25 | 0,37 | 0,37 | - | - | 0,55 | - | - |

| | 90S | | 90L | | 100LR | 100L | 100LA | | 112MR | 112MS | 112MA | 112M |
|---|---|---|---|---|---|---|---|---|---|---|---|---|
| **Poli** | TH | TP | TH | TP | TP | TP | TH | TP | TP | TP | TH | TP |
| **2 (*)** | 1,5 | 1,5 | 2,2 | 2,2 | - | 3 | 3 | - | - | - | 4 | 4 |
| **4 (*)** | 1,1 | 1,1 | 1,5 | 1,5 | - | - | 2,2 | 2,2 | 2,2 | 3 | 4 | 4 |
| **6 (*)** | - | 0,75 | 0,75 | - | 1,1 | 1,5 | 1,1 | - | - | - | 2,2 | 2,2 |

| | 112MR | 112MS | 132S | 132SA | 132MS | 132SB | 132M | 132MA | | 132MB | |
|---|---|---|---|---|---|---|---|---|---|---|---|
| **Poli** | TP | TP | TP | TH | TP | TH | TP | TH | TP | TH | TP |
| **2 (*)** | - | - | 5,5 | 5,5 | - | 7,5 | 7,5 | 9,2 | - | - | - |
| **4 (*)** | 2,2 | 3 | - | 5,5 | 5,5 | - | 7,5 | 7,5 | - | - | - |
| **6 (*)** | - | - | 3 | 3 | - | - | - | 4 | 4 | 5,5 | 5,5 |

| | 160M | 160MA | 160MB | 160L | 160LA | 180M | 180L |
|---|---|---|---|---|---|---|---|
| **Poli** | TP | TP | TP | TP | TP | TP | TP |
| **2 (*)** | - | 11 | 15 | 18,5 | - | 22 | - |
| **4 (*)** | - | 11 | - | - | 15 | 18,5 | 22 |
| **6 (*)** | 7,5 | - | - | 11 | - | - | 15 |

| | 200L | 200LA | 200LB | 225S | 225M | 250M | 280S | 280M |
|---|---|---|---|---|---|---|---|---|
| **Poli** | TP | TP | TP | TP | TP | TP | TP | TP |
| **2 (*)** | - | 30 | 37 | - | - | - | - | - |
| **4 (*)** | 30 | - | - | 37 | 45 | 55 | 75 | 90 |
| **6 (*)** | - | 18,5 | 22 | - | - | - | - | - |

# 3.4 PESI



| B-PB | 063 | 071 | 080-090 | 100-112 | 132 | 160-180 | 200 | 225 | 250 | 280 | |
|---|---|---|---|---|---|---|---|---|---|---|---|
| A42 | 4,8 | 4,9 | 5,1 | / | / | / | / | / | / | / | ~ kg |
| A52 | 5,4 | 5,5 | 5,7 | / | / | / | / | / | / | / | |
| A53 | 7,0 | 7,1 | 8,5 | / | / | / | / | / | / | / | |
| A72 | / | / | 15,3 | 15,5 | / | / | / | / | / | / | |
| A73 | 14.2 | 14,3 | 15,7 | / | / | / | / | / | / | / | |
| 063 | 20,6 | 21 | 21,6 | 25,9 | / | / | / | / | / | / | |
| 083 | / | / | 29,3 | 31,3 | 33,8 | / | / | / | / | / | |
| 103 | / | / | 54,8 | 56,8 | 59,5 | 66,2 | / | / | / | / | |
| 123 | / | / | 76,6 | 79,0 | 81,7 | 87,7 | / | / | / | / | |
| 143 | / | / | / | 124,0 | 127 | 133 | 148 | / | / | / | |
| 153 | / | / | / | / | 199,0 | 206,5 | 221 | 223 | / | / | |
| 163 | / | / | / | / | / | 385,3 | 449,8 | 457,1 | 473,5 | 473,5 | |

| | TS | | | | | | | | | |
|---|---|---|---|---|---|---|---|---|---|---|
| CB | 063 | 071 | 080 | 090S | 090L | 100 | 112 | 132S | 132M | |
| A42 | 7,4 | 9,3 | 13,3 | / | / | / | / | / | / | ~ kg |
| A52 | 8,2 | 10,2 | 14,2 | 16,1 | 18,6 | / | / | / | / | |
| A53 | 9,7 | 11,7 | 15,7 | 17,6 | 20,1 | / | / | / | / | |
| A72 | / | / | 21,6 | 23,6 | 26,1 | 34,6 | 41,6 | / | / | |
| A73 | 16,9 | 18,9 | 22,9 | 24,9 | 27,4 | / | / | / | / | |
| 063 | 24,1 | 25,0 | 29,7 | 33,6 | 35,6 | 41,1 | 52,6 | / | / | |
| 083 | / | / | 35,7 | 38,1 | 39,6 | 44,7 | 56,1 | 70,1 | 81,7 | |
| 103 | / | / | 61,4 | 63,8 | 65,3 | 70,4 | 81,8 | 95,8 | 107,4 | |
| 123 | / | / | / | 85,7 | 86,7 | 92,7 | 102,7 | 117,7 | 126,7 | |
| 143 | / | / | / | / | / | 138,0 | 148,0 | 163,0 | 172,0 | |

| | TH | | | | | | | |
|---|---|---|---|---|---|---|---|---|
| CB | 080 | 090S | 090L | 100 | 112 | 132S | 132M | |
| A42 | 15,0 | / | / | / | / | / | / | ~ kg |
| A52 | 15,9 | 18,4 | 20,6 | / | / | / | / | |
| A53 | 17,4 | 19,9 | 22,1 | / | / | / | / | |
| A72 | 23,3 | 25,9 | 28,1 | 36,9 | 44,7 | / | / | |
| A73 | 24,6 | 27,2 | 29,4 | / | / | / | / | |
| 063 | 31,4 | 35,9 | 37,6 | 43,4 | 55,7 | / | / | |
| 083 | 37,4 | 40,4 | 41,6 | 47,0 | 59,2 | 75,4 | 88,5 | |
| 103 | 63,1 | 66,1 | 67,3 | 72,7 | 84,9 | 101,1 | 114,2 | |
| 123 | / | 88,0 | 88,7 | 95,0 | 105,8 | 123,0 | 133,5 | |
| 143 | / | / | / | 140,3 | 151,1 | 168,3 | 178,8 | |

# 3.4 PESI



| | TBS | | | | | | | | | |
|---|---|---|---|---|---|---|---|---|---|---|
| **CB** | **063** | **071** | **080** | **090S** | **090L** | **100** | **112** | **132S** | **132M** | |
| **A42** | 8,8 | 11,3 | 16,4 | / | / | / | / | / | / | ~ kg |
| **A52** | 9,6 | 12,1 | 17,3 | 20,9 | 13,5 | / | / | / | / | |
| **A53** | 11,1 | 13,6 | 18,8 | 22,4 | 25,0 | / | / | / | / | |
| **A72** | / | / | 25,6 | 27,1 | 31,6 | 41,6 | 51,6 | / | / | |
| **A73** | 18,4 | 20,9 | 26,9 | 28,9 | 32,9 | / | / | / | / | |
| **063** | 25,6 | 27,2 | 33,2 | 39,1 | 41,1 | 46,6 | 62,3 | / | / | |
| **083** | / | / | 39,2 | 43,6 | 45,1 | 50,2 | 65,8 | 80,3 | 96,3 | |
| **103** | / | / | 64,8 | 69,3 | 70,8 | 75,8 | 91,5 | 106,1 | 122,1 | |
| **123** | / | / | / | 91,2 | 92,2 | 98,2 | 112,4 | 128,0 | 141,4 | |
| **143** | / | / | / | / | / | 143,5 | 158,0 | 173,0 | 187,0 | |

| | TBH | | | | | | | |
|---|---|---|---|---|---|---|---|---|
| **CB** | **080** | **090S** | **090L** | **100** | **112** | **132S** | **132M** | |
| **A42** | 18,1 | / | / | / | / | / | / | ~ kg |
| **A52** | 19,0 | 23,2 | 15,5 | / | / | / | / | |
| **A53** | 20,5 | 24,7 | 27,0 | / | / | / | / | |
| **A72** | 27,3 | 29,4 | 33,6 | 45,3 | 54,7 | / | / | |
| **A73** | 28,6 | 31,2 | 34,9 | / | / | / | / | |
| **063** | 34,9 | 41,4 | 43,1 | 50,3 | 65,4 | / | / | |
| **083** | 40,9 | 45,9 | 47,1 | 53,9 | 68,9 | 85,6 | 102,8 | |
| **103** | 66,5 | 71,6 | 72,8 | 79,5 | 94,6 | 111,4 | 128,6 | |
| **123** | / | 93,5 | 94,2 | 101,9 | 115,5 | 133,3 | 147,9 | |
| **143** | / | / | / | 147,2 | 161,1 | 178,3 | 193,5 | |

| IB | ~ kg |
|---|---|
| **A42** | 4,8 |
| **A52** | 5,4 |
| **A53** | 8,2 |
| **A72** | 15,4 |
| **A73** | 15,4 |
| **063** | 23,7 |
| **083** | 33,1 |
| **103,00** | 58,8 |
| **123,00** | 86,5 |
| **143** | 132,0 |
| **153** | 213,0 |
| **163** | 455,6 |

# 3.5 DIMENSIONALI LINGUETTE



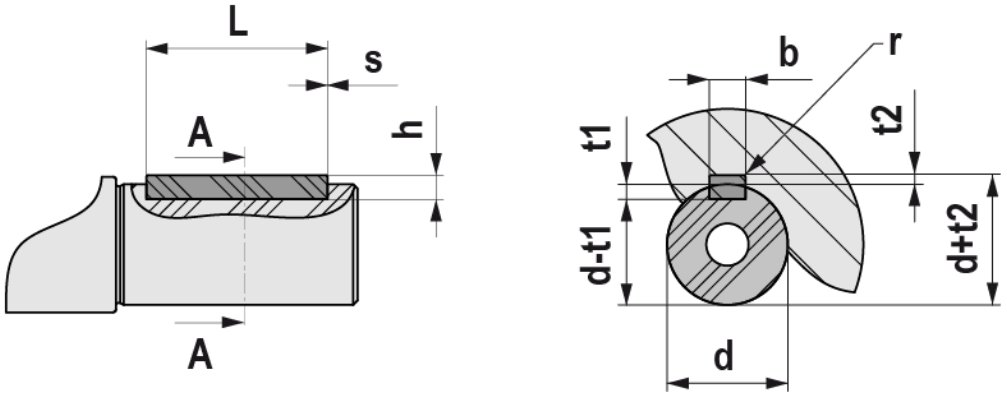


| UNI 6604 - DIN 6885 | | | | | | | | | | | | | | | | |
|---|---|---|---|---|---|---|---|---|---|---|---|---|---|---|---|---|
| d | | | b x h | | | Tol. b / h | L | | s min / max | b | t1 | t2 | Tol. t1 / t2 | r max |
| | 6 | 8 | 2 | × | 2 | h9 / h9 | 6 | 20 | 0,16 0,25 | 2 | 1,2 | 1 | 0,1 0 | 0,08 0,16 |
| > | 8 | 10 | 3 | × | 3 | | 6 | 36 | | 3 | 1,8 | 1,4 | | |
| > | 10 | 12 | 4 | × | 4 | | 8 | 45 | | 4 | 2,5 | 1,8 | | |
| > | 12 | 17 | 5 | × | 5 | | 10 | 56 | 0,25 0,4 | 5 | 3 | 2,3 | | 0,16 0,25 |
| > | 17 | 22 | 6 | × | 6 | | 14 | 70 | | 6 | 3 | 2,8 | | |
| > | 22 | 30 | 8 | × | 7 | h9 / h11 | 18 | 90 | | 8 | 4 | 3,3 | 0,2 0 | |
| > | 30 | 38 | 10 | × | 8 | | 22 | 110 | 0,4 0,6 | 10 | 5 | 3,3 | | 0,25 0,4 |
| > | 38 | 44 | 12 | × | 8 | | 28 | 140 | | 12 | 5 | 3,3 | | |
| > | 44 | 50 | 14 | × | 9 | | 36 | 160 | | 14 | 5,5 | 3,8 | | |
| > | 50 | 58 | 16 | × | 10 | | 45 | 180 | | 16 | 6 | 4,3 | | |
| > | 58 | 65 | 18 | × | 11 | | 50 | 200 | | 18 | 7 | 4,4 | | |
| > | 65 | 75 | 20 | × | 12 | | 56 | 110 | 0,6 0,8 | 20 | 7,5 | 4,9 | | 0,4 0,6 |
| > | 75 | 85 | 22 | × | 14 | | 63 | 140 | | 22 | 9 | 5,4 | | |
| > | 85 | 95 | 25 | × | 14 | | 70 | 160 | | 25 | 9 | 5,4 | | |
| > | 95 | 110 | 28 | × | 16 | | 80 | 180 | | 28 | 10 | 6,4 | | |
| > | 110 | 130 | 32 | × | 18 | | 90 | 200 | | 32 | 11 | 7,4 | | |
| > | 130 | 150 | 36 | × | 20 | | 100 | 160 | 1 1,2 | 36 | 12 | 8,4 | 0,3 0 | 0,7 1 |
| > | 150 | 170 | 40 | × | 22 | | 110 | 180 | | 40 | 13 | 9,4 | | |
| > | 170 | 200 | 45 | × | 25 | | 125 | 200 | | 45 | 14 | 10,4 | | |

# 4.1 ALBERI LENTI



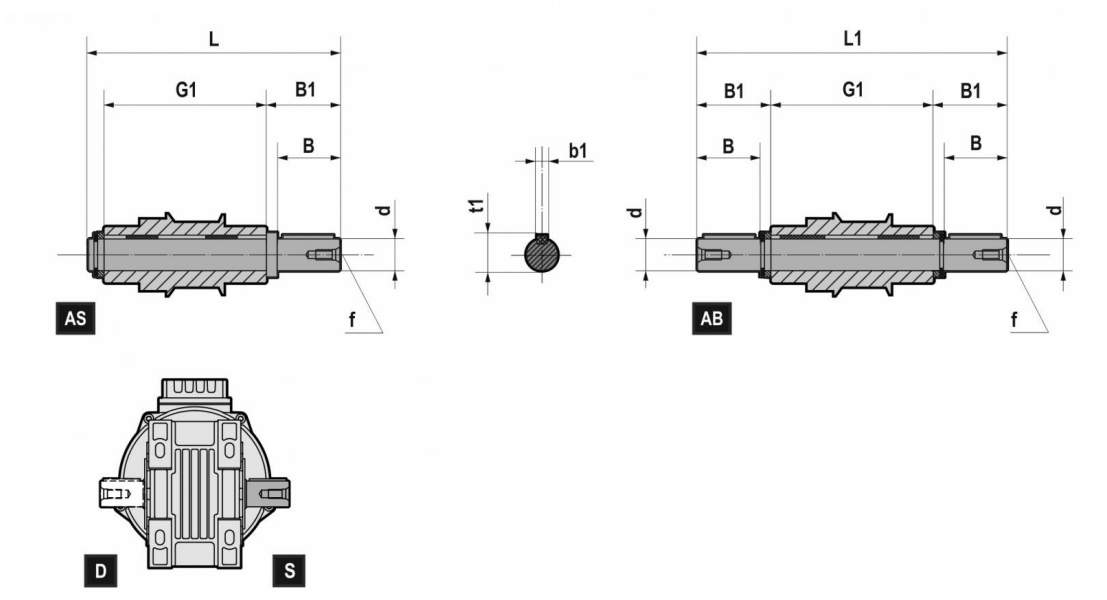


**BA70(*)**

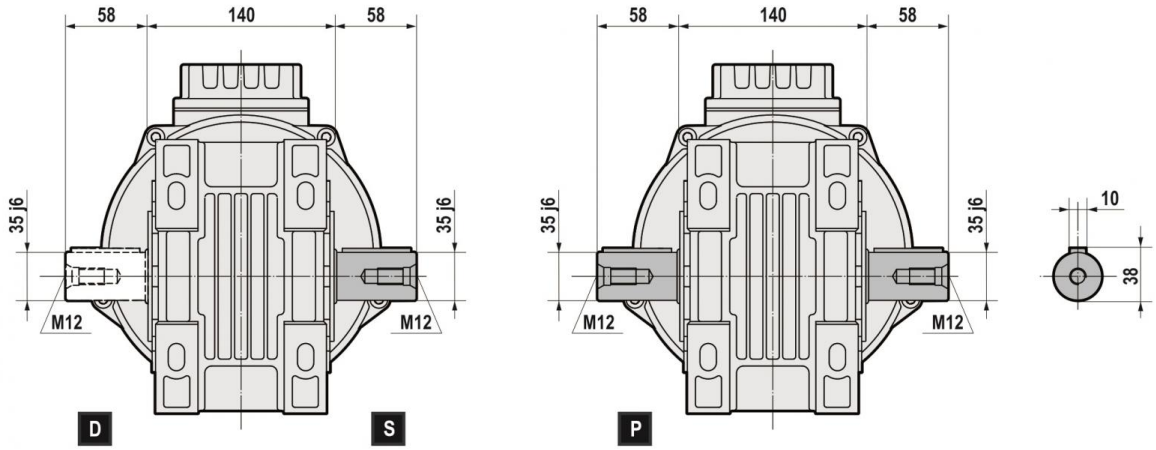


| | d h6 | B | B1 | G1 | L | L1 | f | b1 | t1 |
|---|---|---|---|---|---|---|---|---|---|
| **A40** | 20 | 40 | 43,5 | 100 | 151 | 187 | M6 | 6 | 22,5 |
| **A50** | 25 | 50 | 53,5 | 112 | 173 | 219 | M10 | 8 | 28 |
| **060** | 35 | 58 | 62 | 140 | 210,5 | 264 | M12 | 10 | 38 |
| **080** | 40 | 80 | 84,25 | 180 | 273 | 348,5 | M16 | 12 | 43 |
| **100** | 50 | 100 | 105 | 210 | 325 | 420 | M16 | 14 | 53,5 |
| **125** | 60 | 120 | 125 | 240 | 375 | 490 | M20 | 18 | 64 |
| **140** | 70 | 140 | 146 | 300 | 458 | 592 | M20 | 20 | 74,5 |
| **150** | 90 | 170 | 176,5 | 350 | 540 | 703 | M20 | 25 | 95 |
| **160** | 100 | 210 | 217,5 | 445 | 677 | 880 | M20 | 28 | 106 |

(*) albero pieno

# 4.2 FLANGIA USCITA



## 4.2.1 Informazioni

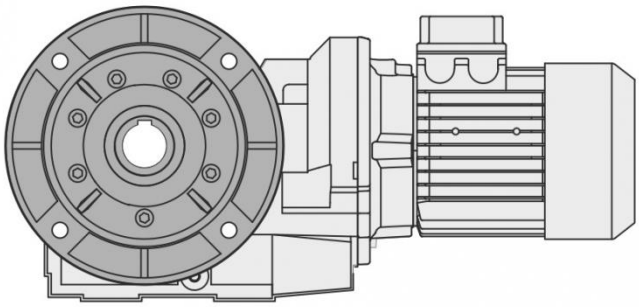

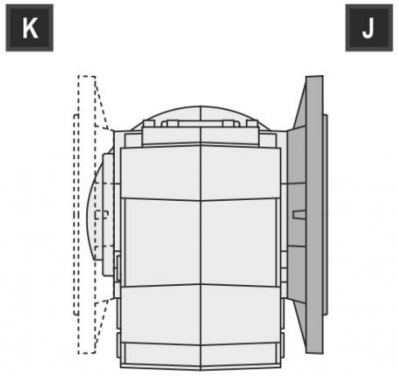


Se non diversamente specificato il riduttore viene fornito con flangia in pos. J riferito alla posizione di piazzamento B3/B5.

# 4.2 FLANGIA USCITA

## 4.2.2 BA

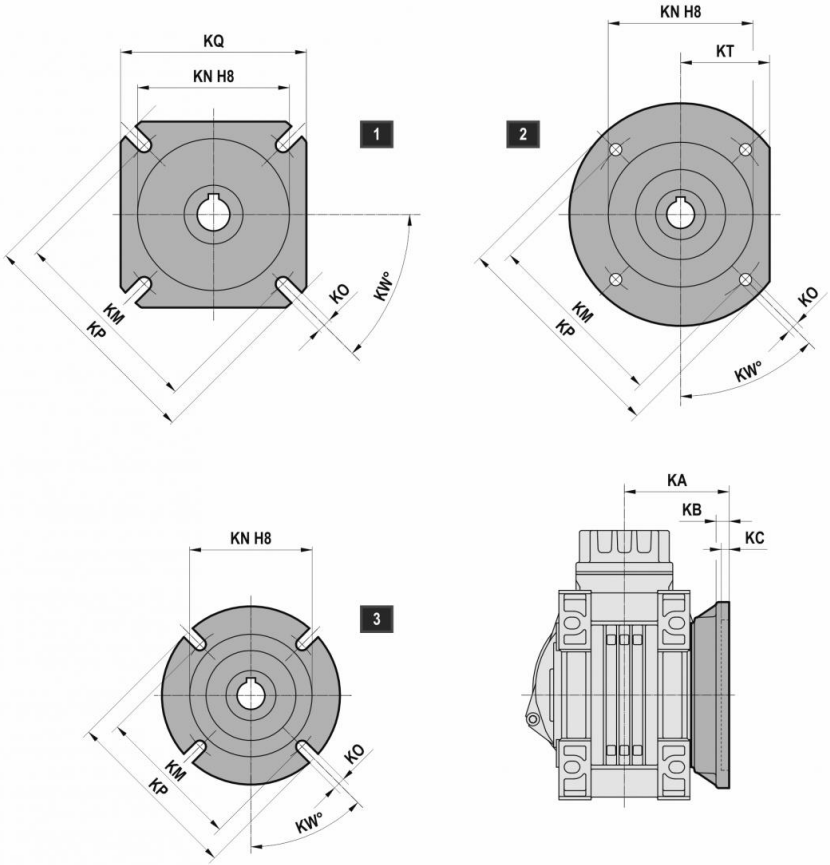


| | A40 | A50 | A70 |
|---|---|---|---|
| **FA** | 1 | 1 | 1 |
| **FB** | 1 | 1 | 3 |
| **FC** | 2 | 2 | - |
| **FD** | 2 | 2 | - |

| B..F-CB..F | | KA | KB | KC | KN | KM | KO | KP | KQ | KT | KW |
|---|---|---|---|---|---|---|---|---|---|---|---|
| **A40** | **FA** | 92,5 | 9 | 5 | 70 | 90 min | 11 (n°4) | 125 | 110 | - | 45° |
| | **FB** | 122,5 | 9 | 5 | 70 | 90 min | 11 (n°4) | 125 | 110 | - | 45° |
| | **FC** | 91,5 | 10 | 5 | 110 | 130 | 9.5 (n°4) | 160 | - | 66 | 45° |
| | **FD** | 74,5 | 14,5 | 5 | 95 | 115 | 11 (n°4) | 140 | - | 60 | 45° |
| **A50** | **FA** | 80 | 10 | 6 | 115 | 150 | 11 (n°4) | 180 | 142 | - | 45° |
| | **FB** | 110 | 10 | 6 | 115 | 150 | 11 (n°4) | 180 | 142 | - | 45° |
| | **FC** | 96 | 10 | 5 | 130 | 165 | 11 (n°4) | 200 | - | 80 | 45° |
| | **FD** | 105 | 10 | 5 | 130 | 165 | 11 (n°4) | 200 | - | - | 45° |
| **A70** | **FA** | 119 | 13 | 6 | 130 | 165 | 14 (n°4) | 200 | 170 | - | 45° |
| | **FB** | 98 | 13 | 6 | 110 | 130 | 11 (n°4) | 160 | - | - | 45° |

# 4.2 FLANGIA USCITA

## 4.2.3 B

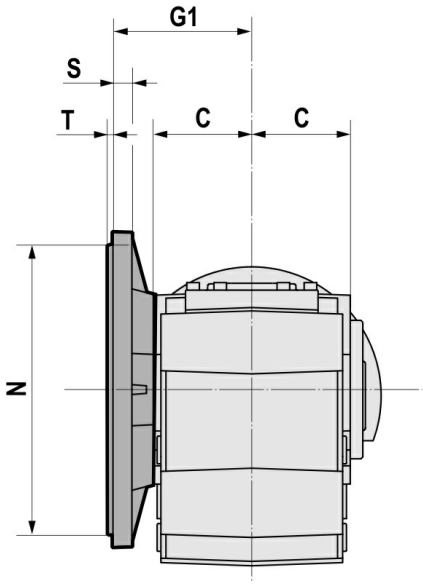


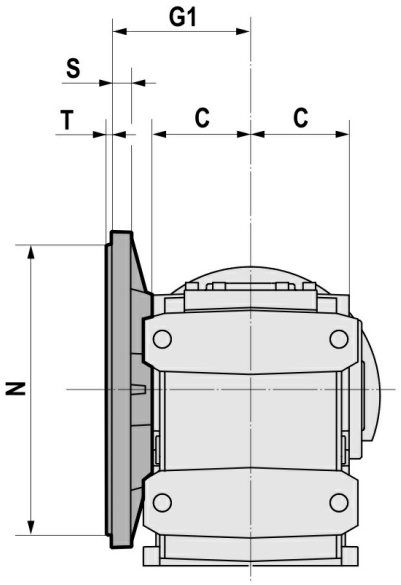


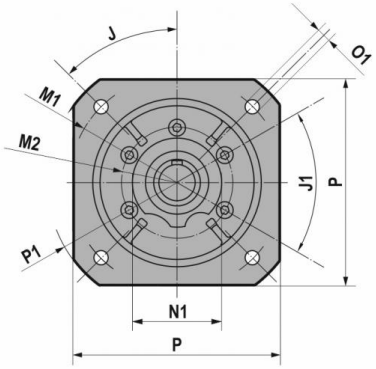


FA

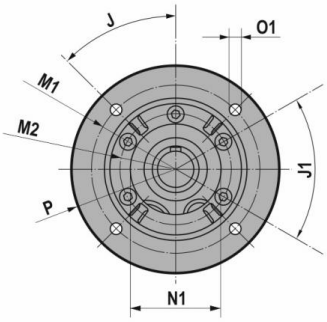


FB

FC

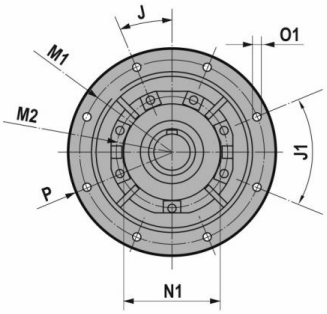


FB

(B150/B160)

# 4.2 FLANGIA USCITA



| B..S - B..U | | J | J1 | M1 | M2 | N f8 | N1 | O1 | P | P1 | S | T | C | G1 |
|---|---|---|---|---|---|---|---|---|---|---|---|---|---|---|
| 063 | FA | 45 | 45 | 265 | 130 | 230 | 110 | 14 | 250 | 300 | 15 | 4 | 61,5 | 93,5 |
| | FB | 45 | 45 | 215 | 130 | 180 | 110 | 14 | 250 | / | 15 | 4 | | |
| | FC | 45 | 45 | 165 | 130 | 130 | 110 | 11 | 200 | / | 15 | 3,5 | | |
| 083 | FA | 45 | 45 | 265 | 130 | 230 | 110 | 14 | 250 | 300 | 15 | 4 | 78 | 110 |
| | FB | 45 | 45 | 215 | 130 | 180 | 110 | 14 | 250 | / | 15 | 4 | | |
| | FC | 45 | 45 | 165 | 130 | 130 | 110 | 11 | 200 | / | 15 | 3,5 | | |
| 103 | FA | 45 | 45 | 300 | 165 | 250 | 130 | 18 | 300 | 350 | 16 | 5 | 95 | 135 |
| | FB | 45 | 45 | 265 | 165 | 230 | 130 | 14 | 300 | / | 16 | 4 | | |
| | FC | 45 | 45 | 215 | 165 | 180 | 130 | 14 | 250 | / | 16 | 4 | | |
| 123 | FA | 45 | 45 | 350 | 185 | 300 | 150 | 18 | 350 | 400 | 18 | 5 | 107,5 | 150 |
| | FB | 45 | 45 | 300 | 185 | 250 | 150 | 18 | 350 | / | 18 | 5 | | |
| | FC | 45 | 45 | 265 | 185 | 230 | 150 | 14 | 300 | / | 18 | 4 | | |
| 143 | FA | / | / | / | / | / | / | / | / | / | / | / | 138 | 187,5 |
| | FB | 45 | 45 | 350 | 200 | 300 | 170 | 18 | 400 | / | 18 | 5 | | |
| | FC | / | / | / | / | / | / | / | / | / | / | / | | |
| 153 | FA | / | / | / | / | / | / | / | / | / | / | / | 162,5 | 207,5 |
| | FB | 22,5 | 45 | 400 | 245 | 350 | 210 | 18 | 450 | / | 25 | 5 | | |
| | FC | 45 | 45 | 350 | 245 | 300 | 210 | 18 | 400 | / | 25 | 5 | | |
| 163 | FA | 22,5 | 45 | 500 | 298 | 450 | 255 | 18 | 550 | / | 28 | 5 | 202,5 | 256 |

# 4.3 BRACCIO DI REAZIONE

## 4.3.1 Posizioni di montaggio - BA40

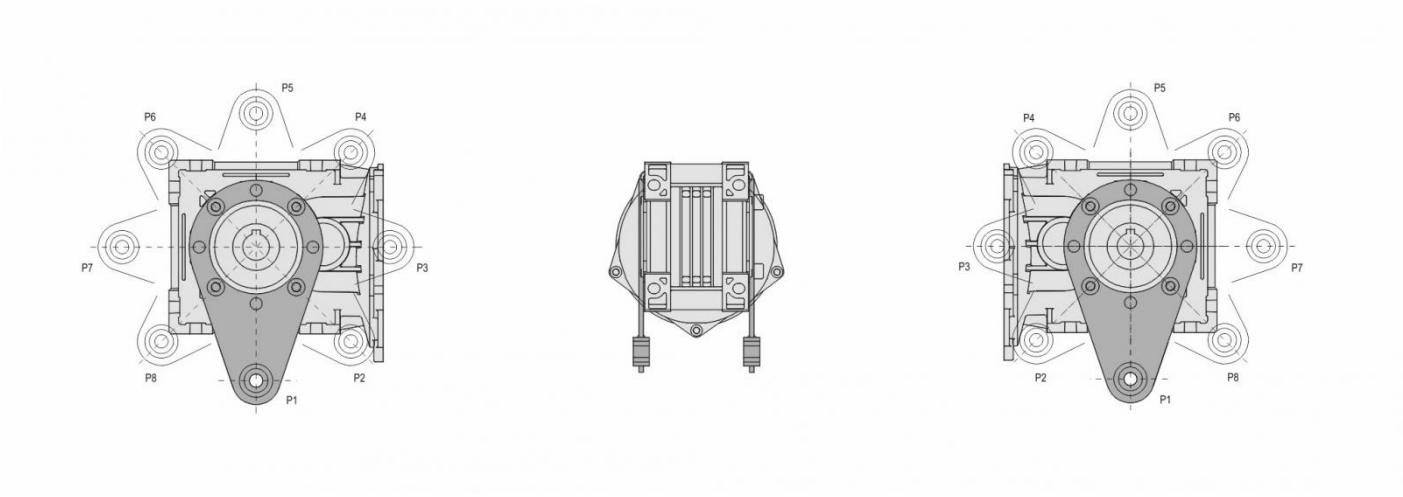


J K J K

| BA42 | P1 | | P2 | | P3 | | P4 | | P5 | | P6 | | P7 | | P8 | |
|---|---|---|---|---|---|---|---|---|---|---|---|---|---|---|---|---|
| | J | K | J | K | J | K | J | K | J | K | J | K | J | K | J | K |
| | | * | / | / | / | / | / | / | | | / | / | | | / | / |

(*) Non disponibile con calettatore

(/) Non disponibile

## 4.3.2 Posizioni di montaggio - BA50

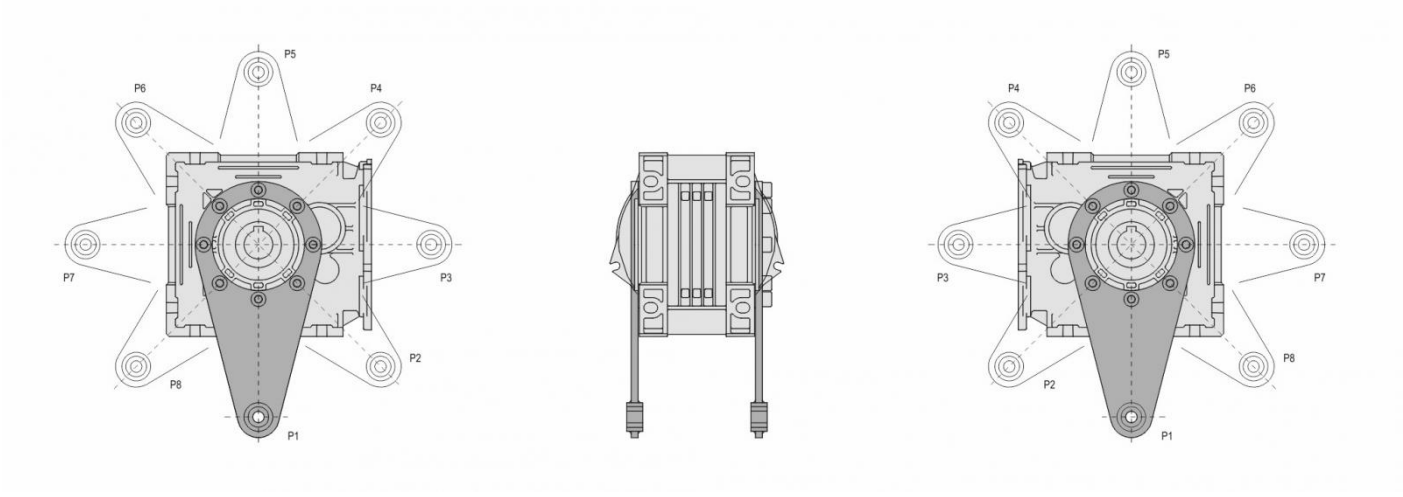


J K J K

| BA52/53 | P1 | | P2 | | P3 | | P4 | | P5 | | P6 | | P7 | | P8 | |
|---|---|---|---|---|---|---|---|---|---|---|---|---|---|---|---|---|
| | J | K | J | K | J | K | J | K | J | K | J | K | J | K | J | K |
| | | | / | / | / | / | / | / | | | | | | | | |

(/) Non disponibile

## 4.3.3 Posizioni di montaggio - BA70

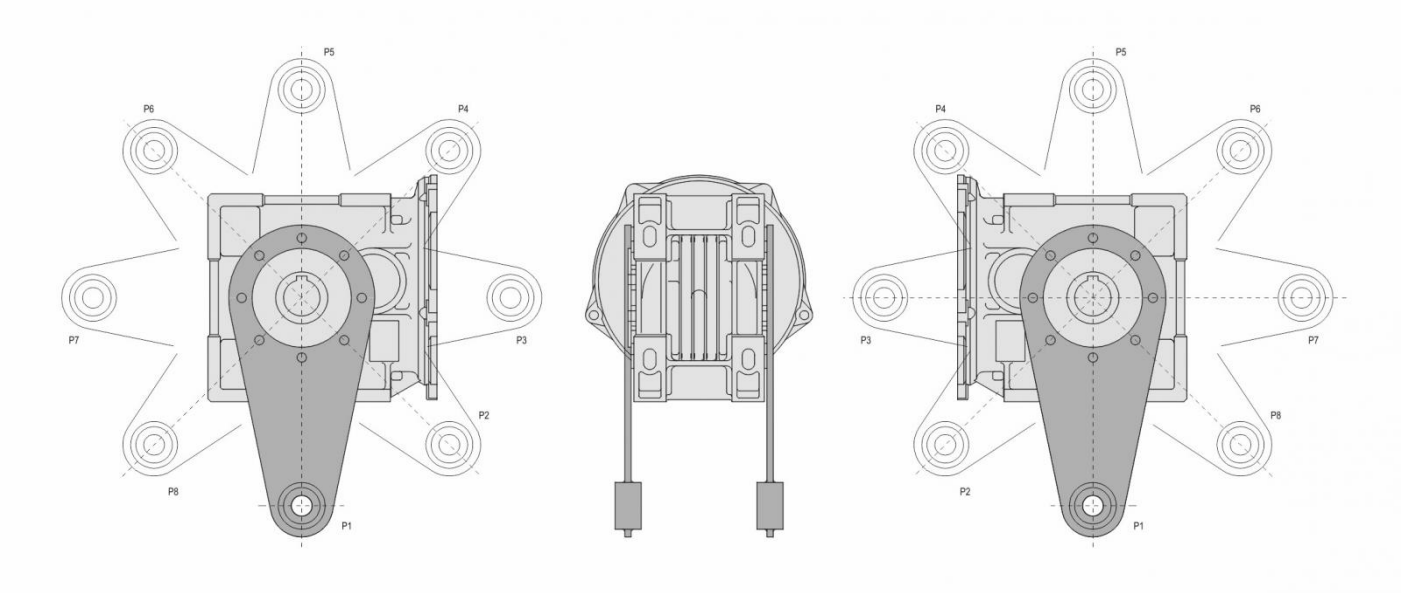


J K J K

| BA72/73 | P1 | | P2 | | P3 | | P4 | | P5 | | P6 | | P7 | | P8 | |
|---|---|---|---|---|---|---|---|---|---|---|---|---|---|---|---|---|
| | J | K | J | K | J | K | J | K | J | K | J | K | J | K | J | K |
| | | | / | / | / | / | / | / | | | | | | | | |

(/) Non disponibile

## 4.3.4 Posizioni di montaggio - B

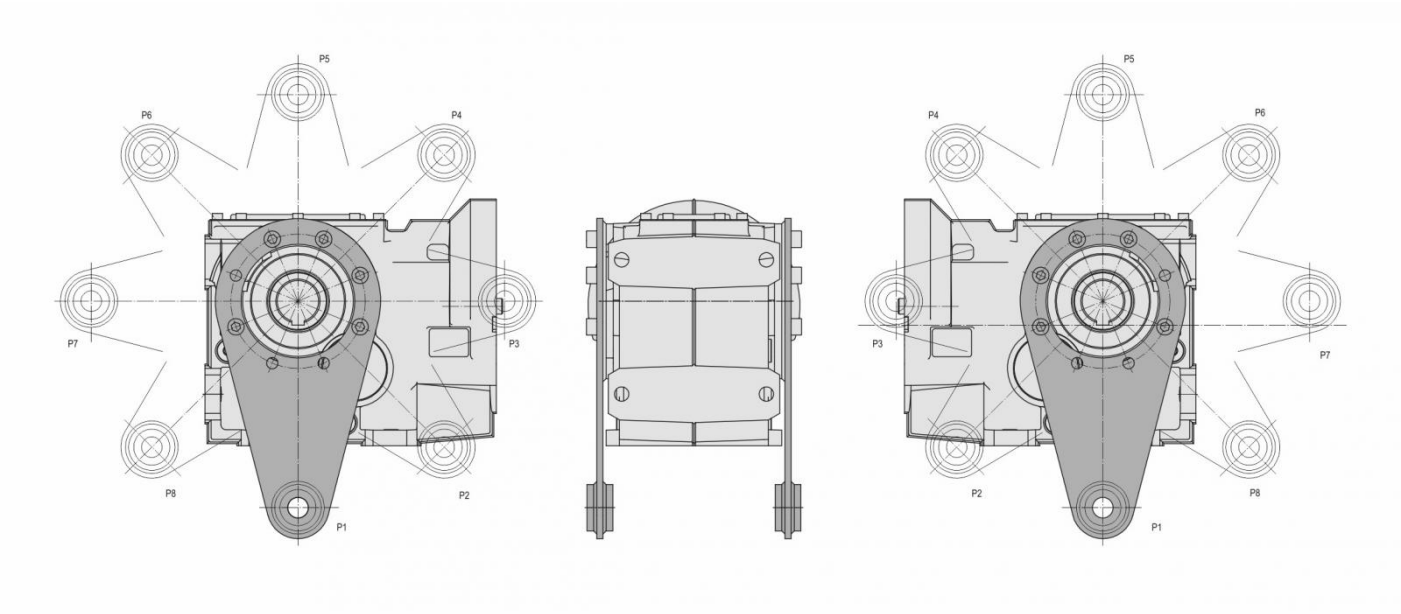


J K J K

| B | P1 | | P2 | | P3 | | P4 | | P5 | | P6 | | P7 | | P8 | |
|---|---|---|---|---|---|---|---|---|---|---|---|---|---|---|---|---|
| | J | K | J | K | J | K | J | K | J | K | J | K | J | K | J | K |
| 063 | | | | | / | / | | | | | | | | | | |
| 083 | | | / | / | / | / | | | | | | | | | | |
| 103 | | | / | / | / | / | | | | | | | | | | |
| 123 | | | / | / | / | / | | | | | | | | | | |

(/) Non disponibile

## 4.3.5 Dimensioni - BA40-50-70 / B063-083-103-123

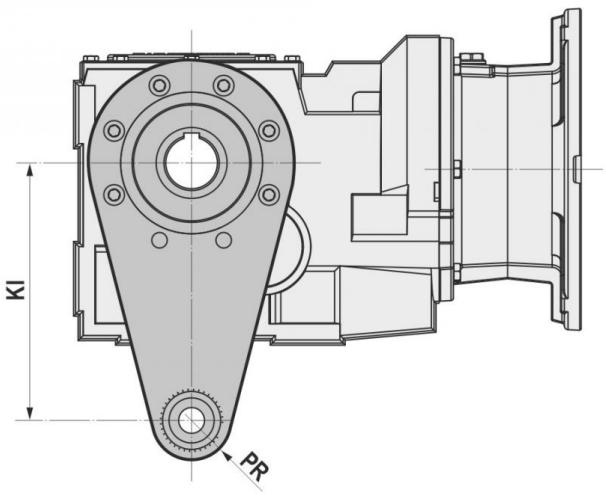


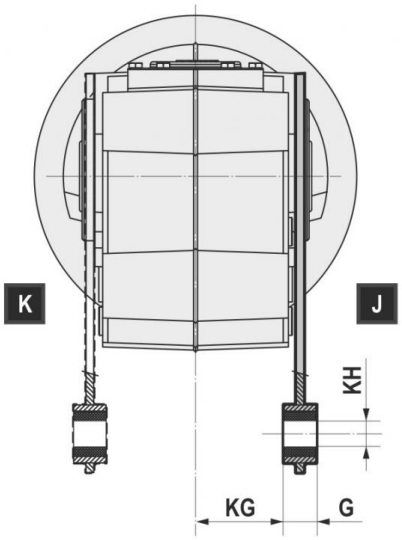


| | KI | KG | KH | G | R |
|---|---|---|---|---|---|
| **A40** | 100 | 41 | 10 | 14 | 18 |
| **A50** | 150 | 47 | 10 | 14 | 18 |
| **A70** | 200 | 55,5 | 20 | 25 | 30 |
| **063S** | 200 | 62 | 20 | 25 | 30 |
| **083S** | 200 | 68,5 | 20 | 25 | 30 |
| **103S** | 250 | 83 | 25 | 30 | 35 |
| **123S** | 300 | 91,5 | 25 | 40 | 40 |
| **063U** | 200 | 62 | 20 | 25 | 30 |
| **083U** | 200 | 78,5 | 20 | 25 | 30 |
| **103U** | 250 | 95 | 25 | 30 | 35 |
| **123U** | 300 | 103,5 | 25 | 40 | 40 |

# 4.3 BRACCIO DI REAZIONE

## 4.3.6 Dimensioni - B143-153-163

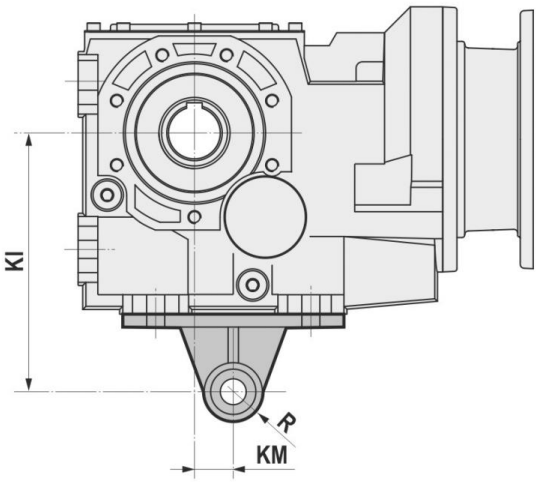


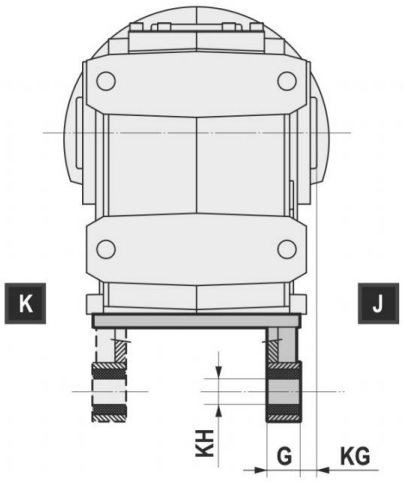


| | KM | KI | KG | KH | G | R |
|---|---|---|---|---|---|---|
| **143** | 45 | 350 | 40 | 30 | 60 | 45 |
| **153** | 45 | 450 | 45 | 30 | 60 | 45 |
| **163** | 60 | 550 | 7,5 | 40 | 110 | 65 |

# 4.4 COPERCHIO DI PROTEZIONE ASSE LENTO



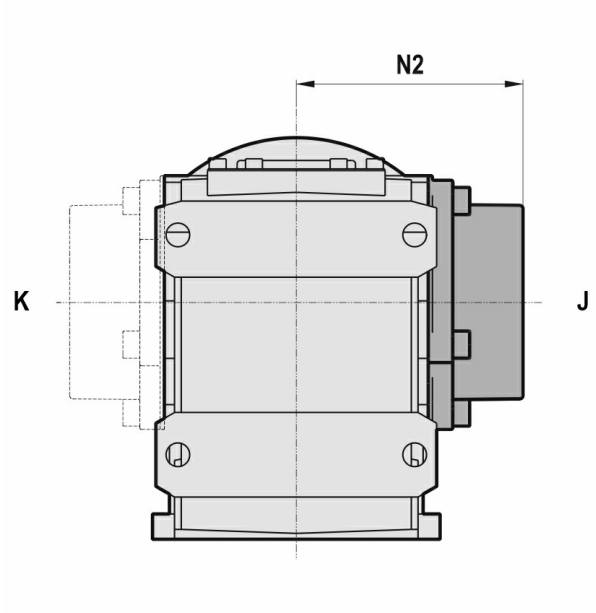


| | N2 |
|---|---|
| B063 | 117,5 |
| B083 | 134 |
| B103 | 150 |
| B123 | 174 |
| B143 | 217 |
| B153 | 256,5 |
| B163 | 301,5 |

Versioni FL, FM, SL, SM, UL, UM fornito non montato

Accessorio NON certificato ATEX.

# 4.5 DISPOSITIVO ANTIRETRO



## SENSO DI ROTAZIONE STANDARD

**BA..**2/S - **BA..**3/C-D-P-L - **B..**3/C-D-P-L

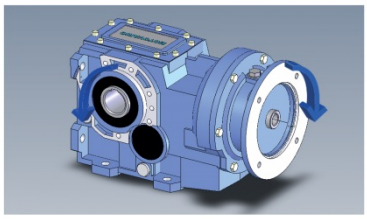

SENSO **ORARIO** RIFERITO ALL'ASSE VELOCE

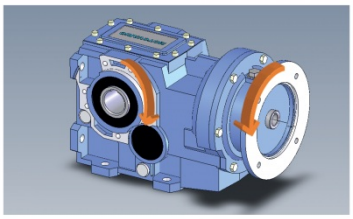

SENSO **ANTIORARIO** RIFERITO ALL'ASSE VELOCE

**BA..**2/C-D-P-L - **BA..**3/S - **B..**3/S-M

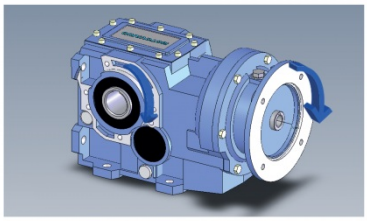

SENSO **ORARIO** RIFERITO ALL'ASSE VELOCE

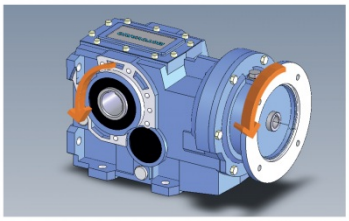

SENSO **ANTIORARIO** RIFERITO ALL'ASSE VELOCE

## SENSO DI ROTAZIONE OPPOSTO

**BA..**2/S - **BA..**3/C-D-P-L - **B..**3/C-D-P-L

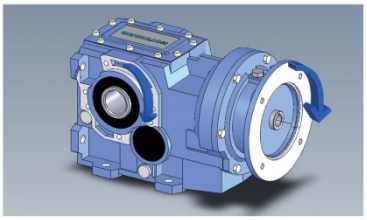

SENSO **ORARIO** RIFERITO ALL'ASSE VELOCE

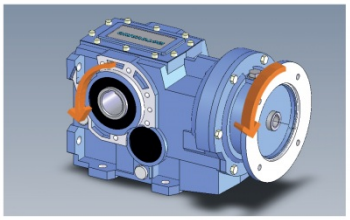

SENSO **ANTIORARIO** RIFERITO ALL'ASSE VELOCE

**BA..**2/C-D-P-L - **BA..**3/S - **B..**3/S-M

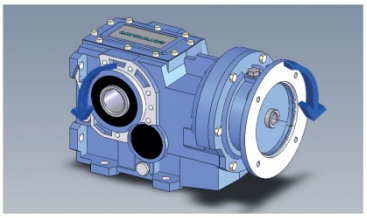

SENSO **ORARIO** RIFERITO ALL'ASSE VELOCE

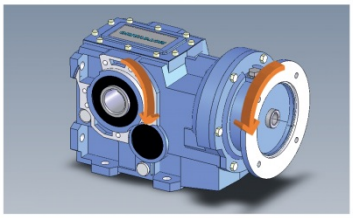

SENSO **ANTIORARIO** RIFERITO ALL'ASSE VELOCE

Il riduttore può essere fornito munito di dispositivo antiretro sull'asse veloce. L'antiretro permette la rotazione degli alberi in un solo senso, a seconda della grandezza è disponibile nella flangia PAM oppure nel motore, senza ingombri aggiuntivi. E' molto importante, in fase di ordine, specificare il senso di rotazione richiesto. Il

# 4.5 DISPOSITIVO ANTIRETRO



dispositivo non è disponibile per posizione di piazzamento V5 con motore 100/280. A richiesta il senso di rotazione dell'asse lento può essere invertito, specificando rotazione opposta in fase d'ordine

| | Mot. | | | | | | | | | | | |
|---|---|---|---|---|---|---|---|---|---|---|---|---|
| | 063 | 071 | 080 | 090 | 100-112 | 132 | 160 | 180 | 200 | 225 | 250 | 280 |
| | 140x11 | 160x14 | 200x19 | 200x24 | 250x28 | 300x38 | 350x42 | 350x48 | 400x55 | 450x60 | 550x65 | 550x75 |
| **063** | B5 | B5 | B5 | B5 | B5 | | | | | | | |
| **083** | | | B5 | B5 | B5 | B5 | | | | | | |
| **103** | | | B5 | B5 | B5 | B5 | B5 | | | | | |
| **123** | | | | B5 | B5 | B5 | B5 | B5 | | | | |
| **143** | | | | | B5 | B5 | B5 | B5 | B5 | | | |
| **153** | | | | | | B5 | B5 | B5 | B5 | B5 | | |
| **163** | | | | | | | B5 | B5 | B5 | B5 | B5 | B5 |

# 4.6 ALBERO LENTO CAVO CON CALETTATORE



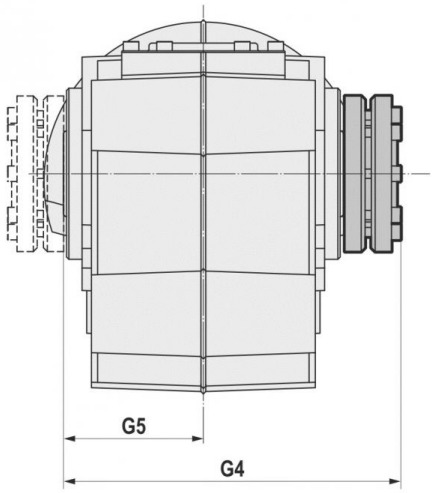


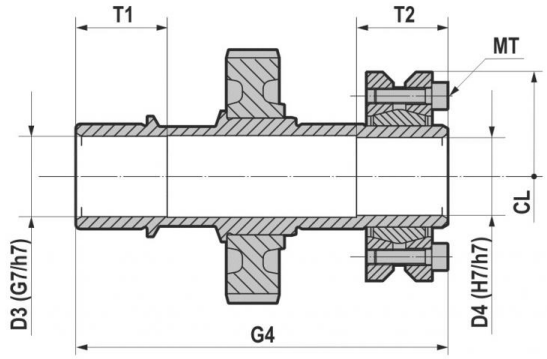


| | D3 | D4 | G4 | G5 | T1 | T2 | CL | MT 12,9 (Nm) |
|---|---|---|---|---|---|---|---|---|
| **A42** | 24 | 24 | 130 | 50 | 25 | 35 | 72 | 15 |
| **A52-A53** | 31 | 30 | 143 | 56 | 35 | 35 | 80 | 15 |
| **A72-A73** | 36 | 35 | 173 | 70 | 40 | 35 | 80 | 15 |
| **063** | 36 | 35 | 173 | 70 | 40 | 35 | 80 | 15 |
| **083** | 41 | 40 | 217 | 90 | 50 | 40 | 100 | 15 |
| **103** | 51 | 50 | 248 | 105 | 55 | 40 | 115 | 15 |
| **123** | 61 | 60 | 282 | 120 | 60 | 50 | 145 | 40 |
| **143** | 72 | 70 | 355 | 150 | 70 | 65 | 170 | 50 |
| **153** | 92 | 90 | 415 | 175 | 80 | 75 | 184 | 70 |
| **163** | 102 | 100 | 512 | 222,5 | 100 | 100 | 215 | 70 |

Pulire e sgrassare le zone degli alberi interessati all'accoppiamento. Rispettare la coppia di serraggio viti indicata (MT).

# 4.7 TENUTE RINFORZATE ASSE LENTO



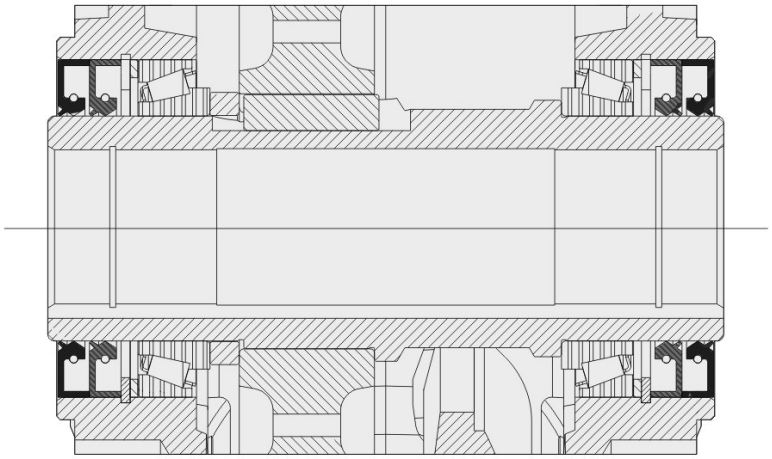

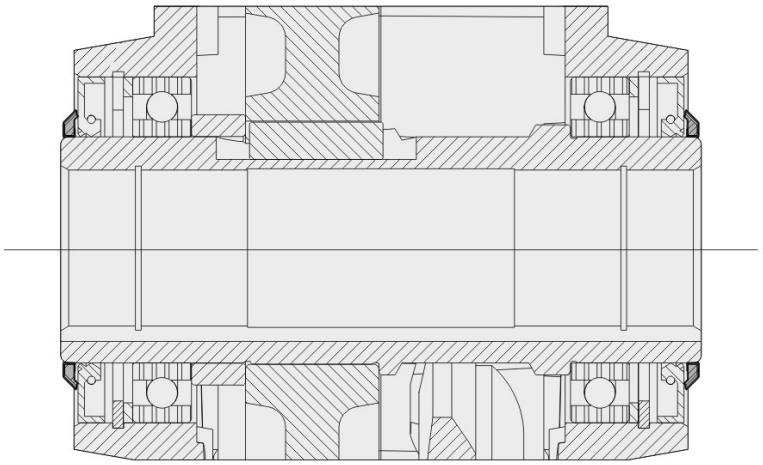

| | Doppio anello | Anello VRM |
|---|---|---|
| B063 | | x |
| B083 | | x |
| B103 | | x |
| B123 | | x |
| B143 | x | |
| B153 | x | |
| B163 | x | |

La tenuta rinforzata può essere effettuata a seconda della grandezza o tramite due anelli di tenuta o tramite anello di tenuta standard con anello VRM. La differenza tra le due soluzioni è chiarita dai disegni in alto.
In opzione il riduttore può essere fornito di tenute in FPM (FKM) .

# 4.8 KIT MONTAGGIO/SMONTAGGIO



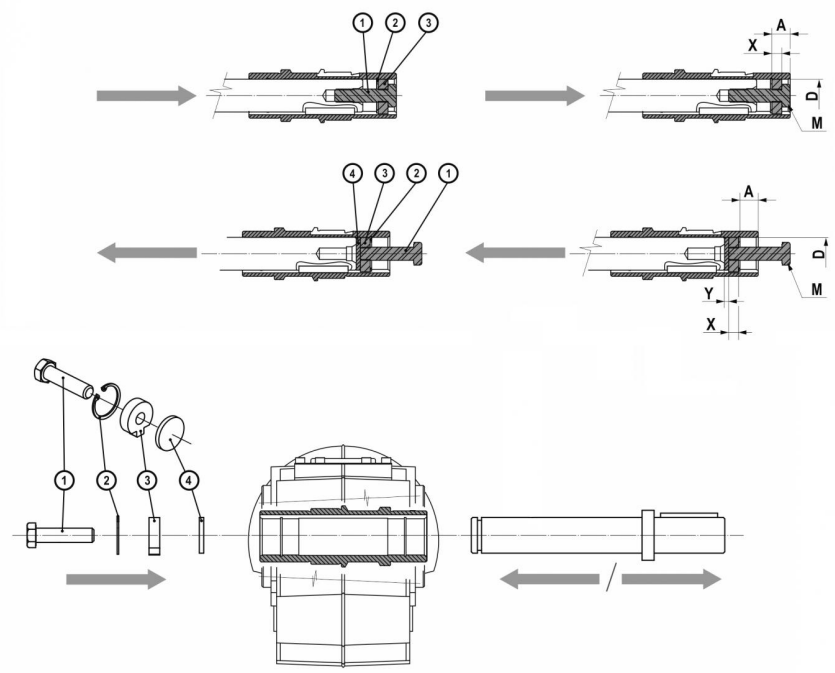


| | D | A | X | Y | M |
|---|---|---|---|---|---|
| **A40** | 20 | - | - | - | - |
| **A50** | 25 | - | - | - | - |
| **A50** | 28 | - | - | - | - |
| **A70** | 25 | 12 | 12 | 5 | M12x45 |
| **A70** | 30 | 13,8 | 10 | 5 | M10x35 |
| **B060** | 35 | 12 | 12 | 5 | M12x45 |
| **B060** | 40 | 12 | 12 | 5 | M16x50 |
| **B080** | 40 | 22,25 | 12 | 5 | M16x50 |
| **B080** | 45 | 22,25 | 12 | 5 | M16x50 |
| **B100** | 50 | 25 | 12 | 5 | M16x50 |
| **B125** | 60 | 28 | 16 | 5 | M20x70 |
| **B140** | 70 | 27,5 | 16 | 5 | M20x70 |
| **B150** | 90 | 34 | 20 | 5 | M24x60 |
| **B160** | 100 | 40 | 20 | 5 | M24x120 |

Kit di smontaggio/montaggio dei riduttori ad albero cavo con linguetta. A richiesta la fornitura comprende:

1. Vite di fissaggio
2. Anello di sicurezza
3. Dado a nasello
4. Dischetto di spinta

# 5.1 B/BA MOTORIDUTTORE (50Hz)



## 0.09 kW

| n2 [rpm] | M2 [Nm] | fs | i | Riduttore | Motore | Fr2 D-S-P [N] | Fr2 C [N] |
|---|---|---|---|---|---|---|---|
| 25.5 | 32 | 3.9 | 33.78 | BA42 | TS/TBS63A6 | - | 3507 |
| 18.3 | 45 | 2.8 | 47.12 | BA42 | TS/TBS63A6 | - | 3918 |
| 15.0 | 55 | 2.3 | 57.43 | BA42 | TS/TBS63A6 | - | 4000 |
| 13.4 | 61 | 1.9 | 64.13 | BA42 | TS/TBS63A6 | - | 4000 |
| 13.3 | 62 | 3.4 | 64.87 | BA52 | TS/TBS63A6 | - | 4000 |
| 11.7 | 67 | 3.5 | 73.70 | BA53 | TS/TBS63A6 | - | 4000 |
| 11.0 | 75 | 1.5 | 78.17 | BA42 | TS/TBS63A6 | - | 4000 |
| 10.9 | 76 | 2.8 | 79.07 | BA52 | TS/TBS63A6 | - | 4000 |
| 9.2 | 85 | 2.7 | 93.33 | BA53 | TS/TBS63A6 | - | 4000 |
| 7.7 | 101 | 2.3 | 111.61 | BA53 | TS/TBS63A6 | - | 4000 |
| 6.3 | 124 | 1.9 | 136.53 | BA53 | TS/TBS63A6 | - | 4000 |
| 5.7 | 136 | 3.5 | 149.73 | BA73 | TS/TBS63A6 | 10000 | 5500 |
| 5.0 | 157 | 1.5 | 172.53 | BA53 | TS/TBS63A6 | - | 4000 |
| 4.8 | 164 | 2.9 | 180.23 | BA73 | TS/TBS63A6 | 10000 | 5500 |
| 4.4 | 179 | 1.3 | 197.11 | BA53 | TS/TBS63A6 | - | 4000 |
| 3.9 | 203 | 2.3 | 222.93 | BA73 | TS/TBS63A6 | 10000 | 5500 |
| 3.5 | 226 | 1.0 | 249.08 | BA53 | TS/TBS63A6 | - | 4000 |
| 3.3 | 236 | 2.0 | 260.20 | BA73 | TS/TBS63A6 | 10000 | 5500 |
| 3.2 | 246 | 0.9 | 271.16 | BA53 | TS/TBS63A6 | - | 4000 |
| 2.7 | 292 | 1.6 | 321.85 | BA73 | TS/TBS63A6 | 10000 | 5500 |
| 2.4 | 325 | 1.5 | 357.95 | BA73 | TS/TBS63A6 | 10000 | 5500 |
| 1.9 | 402 | 1.2 | 442.76 | BA73 | TS/TBS63A6 | 10000 | 5500 |

## 0.12 kW

| n2 [rpm] | M2 [Nm] | fs | i | Riduttore | Motore | Fr2 D-S-P [N] | Fr2 C [N] |
|---|---|---|---|---|---|---|---|
| 30.7 | 36 | 3.5 | 28.00 | BA42 | TS/TBS63B6 | - | 3294 |
| 28.4 | 38 | 3.1 | 47.12 | BA42 | TS/TBS63A4 | - | 3379 |
| 27.5 | 40 | 3.2 | 31.27 | BA42 | TS/TBS63B6 | - | 3417 |
| 25.5 | 43 | 2.9 | 33.78 | BA42 | TS/TBS63B6 | - | 3507 |
| 23.3 | 47 | 2.6 | 57.43 | BA42 | TS/TBS63A4 | - | 3610 |
| 20.9 | 52 | 2.1 | 64.13 | BA42 | TS/TBS63A4 | - | 3745 |
| 20.7 | 53 | 3.8 | 64.87 | BA52 | TS/TBS63A4 | - | 4000 |
| 20.5 | 54 | 3.9 | 41.97 | BA52 | TS/TBS63B6 | - | 4000 |
| 18.3 | 60 | 2.1 | 47.12 | BA42 | TS/TBS63B6 | - | 3918 |
| 18.2 | 57 | 3.9 | 73.70 | BA53 | TS/TBS63A4 | - | 4000 |
| 17.1 | 64 | 1.7 | 78.17 | BA42 | TS/TBS63A4 | - | 4000 |
| 16.9 | 64 | 3.1 | 79.07 | BA52 | TS/TBS63A4 | - | 4000 |
| 16.8 | 66 | 3.5 | 51.34 | BA52 | TS/TBS63B6 | - | 4000 |
| 15.0 | 73 | 1.7 | 57.43 | BA42 | TS/TBS63B6 | - | 4000 |
| 14.4 | 72 | 3.1 | 93.33 | BA53 | TS/TBS63A4 | - | 4000 |

# 5.1 B/BA MOTORIDUTTORE (50Hz)



## 0.12 kW

| n2 [rpm] | M2 [Nm] | fs | i | Riduttore | Motore | Fr2 D-S-P [N] | Fr2 C [N] |
|---|---|---|---|---|---|---|---|
| 13.4 | 82 | 1.4 | 64.13 | BA42 | TS/TBS63B6 | - | 4000 |
| 13.3 | 83 | 2.5 | 64.87 | BA52 | TS/TBS63B6 | - | 4000 |
| 12.0 | 86 | 2.6 | 111.61 | BA53 | TS/TBS63A4 | - | 4000 |
| 11.7 | 89 | 2.6 | 73.70 | BA53 | TS/TBS63B6 | - | 4000 |
| 11.0 | 100 | 1.2 | 78.17 | BA42 | TS/TBS63B6 | - | 4000 |
| 10.9 | 101 | 2.1 | 79.07 | BA52 | TS/TBS63B6 | - | 4000 |
| 9.8 | 105 | 2.1 | 136.53 | BA53 | TS/TBS63A4 | - | 4000 |
| 9.2 | 113 | 2.0 | 93.33 | BA53 | TS/TBS63B6 | - | 4000 |
| 8.9 | 115 | 3.9 | 149.73 | BA73 | TS/TBS63A4 | 10000 | 5500 |
| 7.8 | 133 | 1.7 | 172.53 | BA53 | TS/TBS63A4 | - | 4000 |
| 7.7 | 135 | 1.7 | 111.61 | BA53 | TS/TBS63B6 | - | 4000 |
| 7.4 | 139 | 3.2 | 180.23 | BA73 | TS/TBS63A4 | 10000 | 5500 |
| 7.1 | 146 | 3.2 | 120.34 | BA73 | TS/TBS63B6 | 10000 | 5500 |
| 6.8 | 152 | 1.5 | 197.11 | BA53 | TS/TBS63A4 | - | 4000 |
| 6.3 | 165 | 1.4 | 136.53 | BA53 | TS/TBS63B6 | - | 4000 |
| 6.2 | 169 | 3.7 | 139.15 | B063 | TS/TBS63B6 | 12000 | 7811 |
| 6.0 | 172 | 2.6 | 222.93 | BA73 | TS/TBS63A4 | 10000 | 5500 |
| 5.7 | 181 | 2.6 | 149.73 | BA73 | TS/TBS63B6 | 10000 | 5500 |
| 5.5 | 191 | 3.3 | 157.42 | B063 | TS/TBS63B6 | 12000 | 8000 |
| 5.4 | 192 | 1.1 | 249.08 | BA53 | TS/TBS63A4 | - | 4000 |
| 5.1 | 200 | 2.2 | 260.20 | BA73 | TS/TBS63A4 | 10000 | 5500 |
| 5.0 | 209 | 1.1 | 172.53 | BA53 | TS/TBS63B6 | - | 4000 |
| 4.9 | 209 | 1.1 | 271.16 | BA53 | TS/TBS63A4 | - | 4000 |
| 4.8 | 218 | 2.2 | 180.23 | BA73 | TS/TBS63B6 | 10000 | 5500 |
| 4.4 | 239 | 1.0 | 197.11 | BA53 | TS/TBS63B6 | - | 4000 |
| 4.2 | 248 | 1.8 | 321.85 | BA73 | TS/TBS63A4 | 10000 | 5500 |
| 3.9 | 270 | 1.7 | 222.93 | BA73 | TS/TBS63B6 | 10000 | 5500 |
| 3.7 | 276 | 1.6 | 357.95 | BA73 | TS/TBS63A4 | 10000 | 5500 |
| 3.3 | 315 | 1.5 | 260.20 | BA73 | TS/TBS63B6 | 10000 | 5500 |
| 3.0 | 341 | 1.3 | 442.76 | BA73 | TS/TBS63A4 | 10000 | 5500 |
| 2.7 | 390 | 1.2 | 321.85 | BA73 | TS/TBS63B6 | 10000 | 5500 |
| 2.4 | 434 | 1.1 | 357.95 | BA73 | TS/TBS63B6 | 10000 | 5500 |

## 0.15 kW

| n2 [rpm] | M2 [Nm] | fs | i | Riduttore | Motore | Fr2 D-S-P [N] | Fr2 C [N] |
|---|---|---|---|---|---|---|---|
| 56.0 | 25 | 3.9 | 14.46 | BA42 | TS/TBS63C6 | - | 2696 |
| 35.3 | 39 | 3.2 | 22.97 | BA42 | TS/TBS63C6 | - | 3146 |
| 28.9 | 48 | 2.7 | 28.00 | BA42 | TS/TBS63C6 | - | 3360 |
| 25.9 | 53 | 2.4 | 31.27 | BA42 | TS/TBS63C6 | - | 3486 |
| 25.6 | 54 | 3.9 | 31.63 | BA52 | TS/TBS63C6 | - | 3750 |

# 5.1 B/BA MOTORIDUTTORE (50Hz)



## 0.15 kW

| n2 [rpm] | M2 [Nm] | fs | i | Riduttore | Motore | Fr2 D-S-P [N] | Fr2 C [N] |
|---|---|---|---|---|---|---|---|
| 24.0 | 57 | 2.2 | 33.78 | BA42 | TS/TBS63C6 | - | 3577 |
| 23.1 | 60 | 3.5 | 35.10 | BA52 | TS/TBS63C6 | - | 3882 |
| 19.3 | 71 | 2.9 | 41.97 | BA52 | TS/TBS63C6 | - | 4000 |
| 17.2 | 80 | 1.6 | 47.12 | BA42 | TS/TBS63C6 | - | 3997 |
| 15.8 | 87 | 2.7 | 51.34 | BA52 | TS/TBS63C6 | - | 4000 |
| 14.1 | 97 | 1.3 | 57.43 | BA42 | TS/TBS63C6 | - | 4000 |
| 12.6 | 109 | 1.1 | 64.13 | BA42 | TS/TBS63C6 | - | 4000 |
| 12.5 | 110 | 1.9 | 64.87 | BA52 | TS/TBS63C6 | - | 4000 |
| 11.0 | 118 | 1.9 | 73.70 | BA53 | TS/TBS63C6 | - | 4000 |
| 10.2 | 134 | 1.6 | 79.07 | BA52 | TS/TBS63C6 | - | 4000 |
| 10.0 | 130 | 3.6 | 80.83 | BA73 | TS/TBS63C6 | 10000 | 5500 |
| 8.7 | 150 | 1.5 | 93.33 | BA53 | TS/TBS63C6 | - | 4000 |
| 8.3 | 156 | 3.0 | 97.29 | BA73 | TS/TBS63C6 | 10000 | 5500 |
| 8.0 | 163 | 3.9 | 101.20 | B063 | TS/TBS63C6 | 12000 | 7162 |
| 7.3 | 179 | 1.3 | 111.61 | BA53 | TS/TBS63C6 | - | 4000 |
| 7.2 | 180 | 3.5 | 111.74 | B063 | TS/TBS63C6 | 12000 | 7385 |
| 6.7 | 193 | 2.4 | 120.34 | BA73 | TS/TBS63C6 | 10000 | 5500 |
| 6.5 | 200 | 3.2 | 124.20 | B063 | TS/TBS63C6 | 12000 | 7630 |
| 5.9 | 219 | 1.1 | 136.53 | BA53 | TS/TBS63C6 | - | 4000 |
| 5.8 | 224 | 2.8 | 139.15 | B063 | TS/TBS63C6 | 12000 | 7900 |
| 5.4 | 241 | 2.0 | 149.73 | BA73 | TS/TBS63C6 | 10000 | 5500 |
| 5.1 | 253 | 2.5 | 157.42 | B063 | TS/TBS63C6 | 12000 | 8000 |
| 4.5 | 290 | 1.6 | 180.23 | BA73 | TS/TBS63C6 | 10000 | 5500 |
| 3.6 | 358 | 1.3 | 222.93 | BA73 | TS/TBS63C6 | 10000 | 5500 |
| 3.1 | 418 | 1.1 | 260.20 | BA73 | TS/TBS63C6 | 10000 | 5500 |
| 2.5 | 517 | 0.9 | 321.85 | BA73 | TS/TBS63C6 | 10000 | 5500 |

## 0.18 kW

| n2 [rpm] | M2 [Nm] | fs | i | Riduttore | Motore | Fr2 D-S-P [N] | Fr2 C [N] |
|---|---|---|---|---|---|---|---|
| 69.5 | 24 | 4.0 | 12.95 | BA42 | TS/TBS71A6 | - | 2509 |
| 62.2 | 26 | 3.6 | 14.46 | BA42 | TS/TBS71A6 | - | 2603 |
| 59.4 | 27 | 3.4 | 47.12 | BA42 | TS/TBS63A2 | - | 2643 |
| 48.8 | 32 | 2.8 | 57.43 | BA42 | TS/TBS63A2 | - | 2824 |
| 47.5 | 34 | 3.5 | 28.00 | BA42 | TS/TBS63B4 | - | 2848 |
| 43.7 | 36 | 2.3 | 64.13 | BA42 | TS/TBS63A2 | - | 2929 |
| 42.5 | 38 | 3.1 | 31.27 | BA42 | TS/TBS63B4 | - | 2955 |
| 39.4 | 41 | 2.9 | 33.78 | BA42 | TS/TBS63B4 | - | 3032 |
| 39.2 | 42 | 3.0 | 22.97 | BA42 | TS/TBS71A6 | - | 3037 |
| 35.8 | 44 | 1.9 | 78.17 | BA42 | TS/TBS63A2 | - | 3129 |
| 35.4 | 45 | 3.4 | 79.07 | BA52 | TS/TBS63A2 | - | 3366 |

# 5.1 B/BA MOTORIDUTTORE (50Hz)



## 0.18 kW

| n2 [rpm] | M2 [Nm] | fs | i | Riduttore | Motore | Fr2 D-S-P [N] | Fr2 C [N] |
|---|---|---|---|---|---|---|---|
| 32.1 | 51 | 2.5 | 28.00 | BA42 | TS/TBS71A6 | - | 3244 |
| 31.7 | 52 | 3.9 | 41.97 | BA52 | TS/TBS63B4 | - | 3492 |
| 30.0 | 50 | 3.3 | 93.33 | BA53 | TS/TBS63A2 | - | 3557 |
| 28.8 | 57 | 2.2 | 31.27 | BA42 | TS/TBS71A6 | - | 3366 |
| 28.5 | 58 | 3.6 | 31.63 | BA52 | TS/TBS71A6 | - | 3620 |
| 28.2 | 58 | 2.1 | 47.12 | BA42 | TS/TBS63B4 | - | 3388 |
| 26.6 | 62 | 2.0 | 33.78 | BA42 | TS/TBS71A6 | - | 3454 |
| 25.9 | 63 | 3.5 | 51.34 | BA52 | TS/TBS63B4 | - | 3735 |
| 25.6 | 64 | 3.3 | 35.10 | BA52 | TS/TBS71A6 | - | 3748 |
| 25.1 | 60 | 2.8 | 111.61 | BA53 | TS/TBS63A2 | - | 3775 |
| 23.2 | 71 | 1.7 | 57.43 | BA42 | TS/TBS63B4 | - | 3619 |
| 21.4 | 77 | 2.7 | 41.97 | BA52 | TS/TBS71A6 | - | 3978 |
| 20.7 | 79 | 1.4 | 64.13 | BA42 | TS/TBS63B4 | - | 3754 |
| 20.5 | 80 | 2.5 | 64.87 | BA52 | TS/TBS63B4 | - | 4000 |
| 20.5 | 73 | 2.3 | 136.53 | BA53 | TS/TBS63A2 | - | 4000 |
| 19.1 | 86 | 1.5 | 47.12 | BA42 | TS/TBS71A6 | - | 3859 |
| 18.0 | 86 | 2.6 | 73.70 | BA53 | TS/TBS63B4 | - | 4000 |
| 17.5 | 94 | 2.5 | 51.34 | BA52 | TS/TBS71A6 | - | 4000 |
| 17.0 | 96 | 1.1 | 78.17 | BA42 | TS/TBS63B4 | - | 4000 |
| 16.8 | 97 | 2.1 | 79.07 | BA52 | TS/TBS63B4 | - | 4000 |
| 16.2 | 92 | 1.8 | 172.53 | BA53 | TS/TBS63A2 | - | 4000 |
| 15.7 | 105 | 1.2 | 57.43 | BA42 | TS/TBS71A6 | - | 4000 |
| 15.5 | 96 | 3.5 | 180.23 | BA73 | TS/TBS63A2 | 10000 | 5500 |
| 14.3 | 109 | 2.0 | 93.33 | BA53 | TS/TBS63B4 | - | 4000 |
| 14.2 | 105 | 1.6 | 197.11 | BA53 | TS/TBS63A2 | - | 4000 |
| 14.0 | 118 | 1.0 | 64.13 | BA42 | TS/TBS71A6 | - | 4000 |
| 13.9 | 119 | 1.8 | 64.87 | BA52 | TS/TBS71A6 | - | 4000 |
| 13.7 | 113 | 4.0 | 97.29 | BA73 | TS/TBS63B4 | 10000 | 5500 |
| 12.6 | 119 | 2.8 | 222.93 | BA73 | TS/TBS63A2 | 10000 | 5500 |
| 12.2 | 128 | 1.8 | 73.70 | BA53 | TS/TBS71A6 | - | 4000 |
| 11.9 | 130 | 1.7 | 111.61 | BA53 | TS/TBS63B4 | - | 4000 |
| 11.4 | 145 | 1.4 | 79.07 | BA52 | TS/TBS71A6 | - | 4000 |
| 11.2 | 133 | 1.2 | 249.08 | BA53 | TS/TBS63A2 | - | 4000 |
| 11.1 | 140 | 3.4 | 80.83 | BA73 | TS/TBS71A6 | 10000 | 5500 |
| 11.1 | 140 | 3.2 | 120.34 | BA73 | TS/TBS63B4 | 10000 | 5500 |
| 10.8 | 139 | 2.4 | 260.20 | BA73 | TS/TBS63A2 | 10000 | 5500 |
| 10.3 | 145 | 1.1 | 271.16 | BA53 | TS/TBS63A2 | - | 4000 |
| 9.7 | 159 | 1.4 | 136.53 | BA53 | TS/TBS63B4 | - | 4000 |
| 9.6 | 162 | 3.7 | 139.15 | B063 | TS/TBS63B4 | 12000 | 6744 |
| 9.6 | 162 | 1.4 | 93.33 | BA53 | TS/TBS71A6 | - | 4000 |
| 9.3 | 169 | 2.8 | 97.29 | BA73 | TS/TBS71A6 | 10000 | 5500 |

# 5.1 B/BA MOTORIDUTTORE (50Hz)



## 0.18 kW

| n2 [rpm] | M2 [Nm] | fs | i | Riduttore | Motore | Fr2 D-S-P [N] | Fr2 C [N] |
|---|---|---|---|---|---|---|---|
| 8.9 | 176 | 3.6 | 101.20 | B063 | TS/TBS71A6 | 12000 | 6893 |
| 8.9 | 174 | 2.6 | 149.73 | BA73 | TS/TBS63B4 | 10000 | 5500 |
| 8.7 | 172 | 2.0 | 321.85 | BA73 | TS/TBS63A2 | 10000 | 5500 |
| 8.4 | 183 | 3.3 | 157.42 | B063 | TS/TBS63B4 | 12000 | 7005 |
| 8.1 | 194 | 3.2 | 111.74 | B063 | TS/TBS71A6 | 12000 | 7106 |
| 8.1 | 194 | 1.2 | 111.61 | BA53 | TS/TBS71A6 | - | 4000 |
| 7.8 | 191 | 1.8 | 357.95 | BA73 | TS/TBS63A2 | 10000 | 5500 |
| 7.7 | 201 | 1.1 | 172.53 | BA53 | TS/TBS63B4 | - | 4000 |
| 7.5 | 209 | 2.3 | 120.34 | BA73 | TS/TBS71A6 | 10000 | 5500 |
| 7.4 | 210 | 2.1 | 180.23 | BA73 | TS/TBS63B4 | 10000 | 5500 |
| 7.2 | 216 | 2.9 | 124.20 | B063 | TS/TBS71A6 | 12000 | 7340 |
| 6.7 | 229 | 1.0 | 197.11 | BA53 | TS/TBS63B4 | - | 4000 |
| 6.6 | 237 | 1.0 | 136.53 | BA53 | TS/TBS71A6 | - | 4000 |
| 6.5 | 242 | 2.6 | 139.15 | B063 | TS/TBS71A6 | 12000 | 7597 |
| 6.3 | 236 | 1.4 | 442.76 | BA73 | TS/TBS63A2 | 10000 | 5500 |
| 6.0 | 260 | 1.8 | 149.73 | BA73 | TS/TBS71A6 | 10000 | 5500 |
| 6.0 | 259 | 1.7 | 222.93 | BA73 | TS/TBS63B4 | 10000 | 5500 |
| 5.7 | 273 | 2.3 | 157.42 | B063 | TS/TBS71A6 | 12000 | 7885 |
| 5.1 | 303 | 1.5 | 260.20 | BA73 | TS/TBS63B4 | 10000 | 5500 |
| 5.0 | 313 | 1.5 | 180.23 | BA73 | TS/TBS71A6 | 10000 | 5500 |
| 4.1 | 374 | 1.2 | 321.85 | BA73 | TS/TBS63B4 | 10000 | 5500 |
| 4.0 | 387 | 1.2 | 222.93 | BA73 | TS/TBS71A6 | 10000 | 5500 |
| 3.7 | 416 | 1.1 | 357.95 | BA73 | TS/TBS63B4 | 10000 | 5500 |
| 3.5 | 452 | 1.0 | 260.20 | BA73 | TS/TBS71A6 | 10000 | 5500 |

## 0.22 kW

| n2 [rpm] | M2 [Nm] | fs | i | Riduttore | Motore | Fr2 D-S-P [N] | Fr2 C [N] |
|---|---|---|---|---|---|---|---|
| 57.9 | 34 | 3.5 | 22.97 | BA42 | TS/TBS63C4 | - | 2667 |
| 47.5 | 42 | 2.9 | 28.00 | BA42 | TS/TBS63C4 | - | 2848 |
| 42.5 | 47 | 2.6 | 31.27 | BA42 | TS/TBS63C4 | - | 2955 |
| 39.4 | 51 | 2.4 | 33.78 | BA42 | TS/TBS63C4 | - | 3032 |
| 37.9 | 53 | 3.8 | 35.10 | BA52 | TS/TBS63C4 | - | 3290 |
| 31.7 | 63 | 3.2 | 41.97 | BA52 | TS/TBS63C4 | - | 3492 |
| 28.2 | 71 | 1.7 | 47.12 | BA42 | TS/TBS63C4 | - | 3388 |
| 25.9 | 77 | 2.9 | 51.34 | BA52 | TS/TBS63C4 | - | 3735 |
| 23.2 | 86 | 1.4 | 57.43 | BA42 | TS/TBS63C4 | - | 3619 |
| 20.7 | 96 | 1.1 | 64.13 | BA42 | TS/TBS63C4 | - | 3754 |
| 20.5 | 97 | 2.1 | 64.87 | BA52 | TS/TBS63C4 | - | 4000 |
| 18.0 | 105 | 2.1 | 73.70 | BA53 | TS/TBS63C4 | - | 4000 |
| 17.0 | 117 | 0.9 | 78.17 | BA42 | TS/TBS63C4 | - | 4000 |

# 5.1 B/BA MOTORIDUTTORE (50Hz)



## 0.22 kW

| n2 [rpm] | M2 [Nm] | fs | i | Riduttore | Motore | Fr2 D-S-P [N] | Fr2 C [N] |
|---|---|---|---|---|---|---|---|
| 16.8 | 119 | 1.7 | 79.07 | BA52 | TS/TBS63C4 | - | 4000 |
| 16.5 | 115 | 3.9 | 80.83 | BA73 | TS/TBS63C4 | 10000 | 5500 |
| 14.3 | 133 | 1.7 | 93.33 | BA53 | TS/TBS63C4 | - | 4000 |
| 13.7 | 138 | 3.3 | 97.29 | BA73 | TS/TBS63C4 | 10000 | 5500 |
| 11.9 | 159 | 3.8 | 111.74 | B063 | TS/TBS63C4 | 12000 | 6262 |
| 11.9 | 159 | 1.4 | 111.61 | BA53 | TS/TBS63C4 | - | 4000 |
| 11.1 | 171 | 2.6 | 120.34 | BA73 | TS/TBS63C4 | 10000 | 5500 |
| 10.7 | 177 | 3.4 | 124.20 | B063 | TS/TBS63C4 | 12000 | 6469 |
| 9.7 | 194 | 1.1 | 136.53 | BA53 | TS/TBS63C4 | - | 4000 |
| 9.6 | 198 | 3.0 | 139.15 | B063 | TS/TBS63C4 | 12000 | 6697 |
| 8.9 | 213 | 2.1 | 149.73 | BA73 | TS/TBS63C4 | 10000 | 5500 |
| 8.4 | 224 | 2.7 | 157.42 | B063 | TS/TBS63C4 | 12000 | 6953 |
| 7.4 | 256 | 1.8 | 180.23 | BA73 | TS/TBS63C4 | 10000 | 5500 |
| 6.0 | 317 | 1.4 | 222.93 | BA73 | TS/TBS63C4 | 10000 | 5500 |
| 5.1 | 370 | 1.2 | 260.20 | BA73 | TS/TBS63C4 | 10000 | 5500 |
| 4.1 | 458 | 1.0 | 321.85 | BA73 | TS/TBS63C4 | 10000 | 5500 |

## 0.25 kW

| n2 [rpm] | M2 [Nm] | fs | i | Riduttore | Motore | Fr2 D-S-P [N] | Fr2 C [N] |
|---|---|---|---|---|---|---|---|
| 96.1 | 24 | 3.8 | 14.46 | BA42 | TS/TBS71A4 | - | 2252 |
| 91.3 | 25 | 3.6 | 14.46 | BA42 | TS/TBS63D4 | - | 2291 |
| 89.6 | 24 | 3.7 | 31.27 | BA42 | TS/TBS63B2 | - | 2306 |
| 84.7 | 27 | 3.5 | 10.62 | BA42 | TS/TBS71B6 | - | 2349 |
| 82.9 | 26 | 3.4 | 33.78 | BA42 | TS/TBS63B2 | - | 2366 |
| 69.5 | 33 | 2.9 | 12.95 | BA42 | TS/TBS71B6 | - | 2509 |
| 62.2 | 37 | 2.6 | 14.46 | BA42 | TS/TBS71B6 | - | 2603 |
| 60.5 | 37 | 3.2 | 22.97 | BA42 | TS/TBS71A4 | - | 2628 |
| 59.4 | 37 | 2.4 | 47.12 | BA42 | TS/TBS63B2 | - | 2643 |
| 57.5 | 39 | 3.0 | 22.97 | BA42 | TS/TBS63D4 | - | 2673 |
| 54.6 | 42 | 3.0 | 16.47 | BA42 | TS/TBS71B6 | - | 2718 |
| 49.6 | 46 | 2.6 | 28.00 | BA42 | TS/TBS71A4 | - | 2807 |
| 48.8 | 45 | 2.0 | 57.43 | BA42 | TS/TBS63B2 | - | 2824 |
| 47.1 | 48 | 2.5 | 28.00 | BA42 | TS/TBS63D4 | - | 2855 |
| 44.5 | 51 | 2.4 | 31.27 | BA42 | TS/TBS71A4 | - | 2912 |
| 43.9 | 52 | 3.9 | 31.63 | BA52 | TS/TBS71A4 | - | 3132 |
| 43.7 | 50 | 1.6 | 64.13 | BA42 | TS/TBS63B2 | - | 2929 |
| 43.2 | 51 | 3.0 | 64.87 | BA52 | TS/TBS63B2 | - | 3151 |
| 42.2 | 54 | 2.2 | 31.27 | BA42 | TS/TBS63D4 | - | 2962 |
| 41.7 | 54 | 3.7 | 31.63 | BA52 | TS/TBS63D4 | - | 3186 |
| 41.1 | 55 | 2.2 | 33.78 | BA42 | TS/TBS71A4 | - | 2988 |

# 5.1 B/BA MOTORIDUTTORE (50Hz)



## 0.25 kW

| n2 [rpm] | M2 [Nm] | fs | i | Riduttore | Motore | Fr2 D-S-P [N] | Fr2 C [N] |
|---|---|---|---|---|---|---|---|
| 39.6 | 57 | 3.5 | 35.10 | BA52 | TS/TBS71A4 | - | 3242 |
| 39.2 | 58 | 2.2 | 22.97 | BA42 | TS/TBS71B6 | - | 3037 |
| 39.1 | 58 | 2.1 | 33.78 | BA42 | TS/TBS63D4 | - | 3040 |
| 38.0 | 55 | 3.0 | 73.70 | BA53 | TS/TBS63B2 | - | 3288 |
| 37.6 | 60 | 3.3 | 35.10 | BA52 | TS/TBS63D4 | - | 3299 |
| 36.0 | 64 | 3.3 | 25.03 | BA52 | TS/TBS71B6 | - | 3349 |
| 35.8 | 61 | 1.4 | 78.17 | BA42 | TS/TBS63B2 | - | 3129 |
| 35.4 | 62 | 2.4 | 79.07 | BA52 | TS/TBS63B2 | - | 3366 |
| 33.1 | 68 | 2.9 | 41.97 | BA52 | TS/TBS71A4 | - | 3441 |
| 32.1 | 71 | 1.8 | 28.00 | BA42 | TS/TBS71B6 | - | 3244 |
| 31.5 | 72 | 2.8 | 41.97 | BA52 | TS/TBS63D4 | - | 3501 |
| 30.0 | 69 | 2.4 | 93.33 | BA53 | TS/TBS63B2 | - | 3557 |
| 29.5 | 77 | 1.6 | 47.12 | BA42 | TS/TBS71A4 | - | 3338 |
| 28.8 | 80 | 1.6 | 31.27 | BA42 | TS/TBS71B6 | - | 3366 |
| 28.5 | 81 | 2.6 | 31.63 | BA52 | TS/TBS71B6 | - | 3620 |
| 28.0 | 81 | 1.5 | 47.12 | BA42 | TS/TBS63D4 | - | 3396 |
| 27.1 | 84 | 2.6 | 51.34 | BA52 | TS/TBS71A4 | - | 3681 |
| 26.6 | 86 | 1.5 | 33.78 | BA42 | TS/TBS71B6 | - | 3454 |
| 25.7 | 88 | 2.5 | 51.34 | BA52 | TS/TBS63D4 | - | 3745 |
| 25.6 | 89 | 2.4 | 35.10 | BA52 | TS/TBS71B6 | - | 3748 |
| 25.1 | 83 | 2.0 | 111.61 | BA53 | TS/TBS63B2 | - | 3775 |
| 24.2 | 94 | 1.3 | 57.43 | BA42 | TS/TBS71A4 | - | 3566 |
| 23.3 | 89 | 3.8 | 120.34 | BA73 | TS/TBS63B2 | 9807 | 4904 |
| 23.0 | 99 | 1.2 | 57.43 | BA42 | TS/TBS63D4 | - | 3628 |
| 21.7 | 105 | 1.1 | 64.13 | BA42 | TS/TBS71A4 | - | 3700 |
| 21.4 | 107 | 2.0 | 41.97 | BA52 | TS/TBS71B6 | - | 3978 |
| 21.4 | 106 | 1.9 | 64.87 | BA52 | TS/TBS71A4 | - | 3979 |
| 20.6 | 110 | 1.0 | 64.13 | BA42 | TS/TBS63D4 | - | 3764 |
| 20.5 | 101 | 1.6 | 136.53 | BA53 | TS/TBS63B2 | - | 4000 |
| 20.3 | 111 | 1.8 | 64.87 | BA52 | TS/TBS63D4 | - | 4000 |
| 19.1 | 120 | 1.1 | 47.12 | BA42 | TS/TBS71B6 | - | 3859 |
| 18.9 | 114 | 1.9 | 73.70 | BA53 | TS/TBS71A4 | - | 4000 |
| 18.7 | 111 | 3.0 | 149.73 | BA73 | TS/TBS63B2 | 10000 | 5274 |
| 17.9 | 120 | 1.8 | 73.70 | BA53 | TS/TBS63D4 | - | 4000 |
| 17.8 | 117 | 3.9 | 157.42 | B063 | TS/TBS63B2 | 12000 | 5514 |
| 17.6 | 129 | 1.6 | 79.07 | BA52 | TS/TBS71A4 | - | 4000 |
| 17.5 | 131 | 1.8 | 51.34 | BA52 | TS/TBS71B6 | - | 4000 |
| 17.2 | 125 | 3.6 | 80.83 | BA73 | TS/TBS71A4 | 10000 | 5424 |
| 17.0 | 127 | 3.7 | 52.83 | BA73 | TS/TBS71B6 | 10000 | 5441 |
| 16.7 | 136 | 1.5 | 79.07 | BA52 | TS/TBS63D4 | - | 4000 |
| 16.3 | 132 | 3.4 | 80.83 | BA73 | TS/TBS63D4 | 10000 | 5500 |

# 5.1 B/BA MOTORIDUTTORE (50Hz)



## 0.25 kW

| n2 [rpm] | M2 [Nm] | fs | i | Riduttore | Motore | Fr2 D-S-P [N] | Fr2 C [N] |
|---|---|---|---|---|---|---|---|
| 16.2 | 128 | 1.3 | 172.53 | BA53 | TS/TBS63B2 | - | 4000 |
| 15.5 | 133 | 2.5 | 180.23 | BA73 | TS/TBS63B2 | 10000 | 5500 |
| 14.9 | 144 | 1.5 | 93.33 | BA53 | TS/TBS71A4 | - | 4000 |
| 14.3 | 150 | 3.0 | 97.29 | BA73 | TS/TBS71A4 | 10000 | 5500 |
| 14.2 | 146 | 1.1 | 197.11 | BA53 | TS/TBS63B2 | - | 4000 |
| 14.1 | 152 | 1.4 | 93.33 | BA53 | TS/TBS63D4 | - | 4000 |
| 13.9 | 165 | 1.3 | 64.87 | BA52 | TS/TBS71B6 | - | 4000 |
| 13.8 | 158 | 3.0 | 65.35 | BA73 | TS/TBS71B6 | 10000 | 5500 |
| 13.7 | 156 | 3.8 | 101.20 | B063 | TS/TBS71A4 | 12000 | 5967 |
| 13.6 | 158 | 2.8 | 97.29 | BA73 | TS/TBS63D4 | 10000 | 5500 |
| 13.0 | 167 | 3.8 | 69.16 | B063 | TS/TBS71B6 | 12000 | 6064 |
| 13.0 | 165 | 3.6 | 101.20 | B063 | TS/TBS63D4 | 12000 | 6062 |
| 12.6 | 165 | 2.0 | 222.93 | BA73 | TS/TBS63B2 | 10000 | 5500 |
| 12.5 | 173 | 1.3 | 111.61 | BA53 | TS/TBS71A4 | - | 4000 |
| 12.4 | 173 | 3.5 | 111.74 | B063 | TS/TBS71A4 | 12000 | 6151 |
| 12.2 | 178 | 1.3 | 73.70 | BA53 | TS/TBS71B6 | - | 4000 |
| 11.8 | 182 | 3.3 | 111.74 | B063 | TS/TBS63D4 | 12000 | 6249 |
| 11.8 | 182 | 1.2 | 111.61 | BA53 | TS/TBS63D4 | - | 4000 |
| 11.6 | 187 | 3.4 | 77.48 | B063 | TS/TBS71B6 | 12000 | 6278 |
| 11.6 | 186 | 2.4 | 120.34 | BA73 | TS/TBS71A4 | 10000 | 5500 |
| 11.4 | 201 | 1.0 | 79.07 | BA52 | TS/TBS71B6 | - | 4000 |
| 11.2 | 192 | 3.1 | 124.20 | B063 | TS/TBS71A4 | 12000 | 6352 |
| 11.1 | 195 | 2.4 | 80.83 | BA73 | TS/TBS71B6 | 10000 | 5500 |
| 11.0 | 196 | 2.3 | 120.34 | BA73 | TS/TBS63D4 | 10000 | 5500 |
| 10.8 | 193 | 1.8 | 260.20 | BA73 | TS/TBS63B2 | 10000 | 5500 |
| 10.6 | 202 | 3.0 | 124.20 | B063 | TS/TBS63D4 | 12000 | 6453 |
| 10.2 | 211 | 1.0 | 136.53 | BA53 | TS/TBS71A4 | - | 4000 |
| 10.0 | 218 | 2.9 | 90.33 | B063 | TS/TBS71B6 | 12000 | 6577 |
| 10.0 | 215 | 2.8 | 139.15 | B063 | TS/TBS71A4 | 12000 | 6575 |
| 9.7 | 222 | 1.0 | 136.53 | BA53 | TS/TBS63D4 | - | 4000 |
| 9.6 | 225 | 1.0 | 93.33 | BA53 | TS/TBS71B6 | - | 4000 |
| 9.5 | 227 | 2.6 | 139.15 | B063 | TS/TBS63D4 | 12000 | 6678 |
| 9.3 | 235 | 2.0 | 97.29 | BA73 | TS/TBS71B6 | 10000 | 5500 |
| 9.3 | 231 | 1.9 | 149.73 | BA73 | TS/TBS71A4 | 10000 | 5500 |
| 8.9 | 244 | 2.6 | 101.20 | B063 | TS/TBS71B6 | 12000 | 6805 |
| 8.8 | 243 | 2.5 | 157.42 | B063 | TS/TBS71A4 | 12000 | 6823 |
| 8.8 | 244 | 1.8 | 149.73 | BA73 | TS/TBS63D4 | 10000 | 5500 |
| 8.7 | 238 | 1.4 | 321.85 | BA73 | TS/TBS63B2 | 10000 | 5500 |
| 8.4 | 256 | 2.3 | 157.42 | B063 | TS/TBS63D4 | 12000 | 6929 |
| 8.1 | 269 | 2.3 | 111.74 | B063 | TS/TBS71B6 | 12000 | 7009 |
| 7.8 | 265 | 1.3 | 357.95 | BA73 | TS/TBS63B2 | 10000 | 5500 |

# 5.1 B/BA MOTORIDUTTORE (50Hz)



## 0.25 kW

| n2 [rpm] | M2 [Nm] | fs | i | Riduttore | Motore | Fr2 D-S-P [N] | Fr2 C [N] |
|---|---|---|---|---|---|---|---|
| 7.7 | 279 | 1.6 | 180.23 | BA73 | TS/TBS71A4 | 10000 | 5500 |
| 7.5 | 290 | 1.6 | 120.34 | BA73 | TS/TBS71B6 | 10000 | 5500 |
| 7.3 | 293 | 1.5 | 180.23 | BA73 | TS/TBS63D4 | 10000 | 5500 |
| 7.2 | 299 | 2.1 | 124.20 | B063 | TS/TBS71B6 | 12000 | 7232 |
| 6.5 | 336 | 1.9 | 139.15 | B063 | TS/TBS71B6 | 12000 | 7476 |
| 6.3 | 328 | 1.0 | 442.76 | BA73 | TS/TBS63B2 | 10000 | 5500 |
| 6.2 | 345 | 1.3 | 222.93 | BA73 | TS/TBS71A4 | 10000 | 5500 |
| 6.0 | 361 | 1.3 | 149.73 | BA73 | TS/TBS71B6 | 10000 | 5500 |
| 5.9 | 363 | 1.2 | 222.93 | BA73 | TS/TBS63D4 | 10000 | 5500 |
| 5.7 | 380 | 1.7 | 157.42 | B063 | TS/TBS71B6 | 12000 | 7748 |
| 5.3 | 402 | 1.1 | 260.20 | BA73 | TS/TBS71A4 | 10000 | 5500 |
| 5.1 | 424 | 1.1 | 260.20 | BA73 | TS/TBS63D4 | 10000 | 5500 |
| 5.0 | 435 | 1.1 | 180.23 | BA73 | TS/TBS71B6 | 10000 | 5500 |
| 4.3 | 498 | 0.9 | 321.85 | BA73 | TS/TBS71A4 | 10000 | 5500 |

## 0.37 kW

| n2 [rpm] | M2 [Nm] | fs | i | Riduttore | Motore | Fr2 D-S-P [N] | Fr2 C [N] |
|---|---|---|---|---|---|---|---|
| 129.9 | 26 | 3.5 | 10.62 | BA42 | TS/TBS71B4 | - | 2037 |
| 123.4 | 27 | 3.4 | 7.62 | BA42 | TS/TBS80A6 | - | 2072 |
| 122.7 | 26 | 3.4 | 22.97 | BA42 | TS/TBS71A2 | - | 2076 |
| 121.4 | 27 | 3.4 | 22.97 | BA42 | TS/TBS63C2 | - | 2083 |
| 115.5 | 29 | 3.2 | 7.62 | BA42 | TS/TBS71C6 | - | 2118 |
| 106.6 | 31 | 2.9 | 12.95 | BA42 | TS/TBS71B4 | - | 2176 |
| 100.7 | 32 | 2.8 | 28.00 | BA42 | TS/TBS71A2 | - | 2217 |
| 99.6 | 33 | 2.8 | 28.00 | BA42 | TS/TBS63C2 | - | 2225 |
| 95.4 | 35 | 2.6 | 14.46 | BA42 | TS/TBS71B4 | - | 2257 |
| 90.2 | 36 | 2.5 | 31.27 | BA42 | TS/TBS71A2 | - | 2300 |
| 89.2 | 36 | 2.5 | 31.27 | BA42 | TS/TBS63C2 | - | 2308 |
| 88.5 | 38 | 2.5 | 10.62 | BA42 | TS/TBS80A6 | - | 2315 |
| 83.8 | 40 | 3.0 | 16.47 | BA42 | TS/TBS71B4 | - | 2357 |
| 83.5 | 39 | 2.3 | 33.78 | BA42 | TS/TBS71A2 | - | 2360 |
| 82.8 | 41 | 2.3 | 10.62 | BA42 | TS/TBS71C6 | - | 2366 |
| 82.6 | 39 | 2.3 | 33.78 | BA42 | TS/TBS63C2 | - | 2369 |
| 80.4 | 40 | 3.7 | 35.10 | BA52 | TS/TBS71A2 | - | 2561 |
| 79.5 | 41 | 3.7 | 35.10 | BA52 | TS/TBS63C2 | - | 2570 |
| 76.0 | 45 | 3.8 | 11.57 | BA52 | TS/TBS71C6 | - | 2609 |
| 72.6 | 47 | 2.0 | 12.95 | BA42 | TS/TBS80A6 | - | 2473 |
| 68.0 | 50 | 1.9 | 12.95 | BA42 | TS/TBS71C6 | - | 2528 |
| 67.2 | 48 | 3.1 | 41.97 | BA52 | TS/TBS71A2 | - | 2719 |
| 66.5 | 49 | 3.1 | 41.97 | BA52 | TS/TBS63C2 | - | 2728 |

# 5.1 B/BA MOTORIDUTTORE (50Hz)



## 0.37 kW

| n2 [rpm] | M2 [Nm] | fs | i | Riduttore | Motore | Fr2 D-S-P [N] | Fr2 C [N] |
|---|---|---|---|---|---|---|---|
| 65.0 | 52 | 1.8 | 14.46 | BA42 | TS/TBS80A6 | - | 2565 |
| 64.3 | 53 | 3.2 | 14.63 | BA52 | TS/TBS80A6 | - | 2759 |
| 60.9 | 56 | 1.7 | 14.46 | BA42 | TS/TBS71C6 | - | 2622 |
| 60.2 | 56 | 3.0 | 14.63 | BA52 | TS/TBS71C6 | - | 2820 |
| 60.1 | 56 | 2.1 | 22.97 | BA42 | TS/TBS71B4 | - | 2634 |
| 59.8 | 54 | 1.7 | 47.12 | BA42 | TS/TBS71A2 | - | 2637 |
| 59.2 | 55 | 1.6 | 47.12 | BA42 | TS/TBS63C2 | - | 2647 |
| 57.1 | 59 | 2.1 | 16.47 | BA42 | TS/TBS80A6 | - | 2679 |
| 55.1 | 61 | 3.3 | 25.03 | BA52 | TS/TBS71B4 | - | 2904 |
| 54.9 | 62 | 3.4 | 17.11 | BA52 | TS/TBS80A6 | - | 2907 |
| 54.9 | 59 | 2.8 | 51.34 | BA52 | TS/TBS71A2 | - | 2907 |
| 54.3 | 60 | 2.8 | 51.34 | BA52 | TS/TBS63C2 | - | 2918 |
| 53.4 | 63 | 2.0 | 16.47 | BA42 | TS/TBS71C6 | - | 2739 |
| 51.4 | 66 | 3.2 | 17.11 | BA52 | TS/TBS71C6 | - | 2972 |
| 49.3 | 68 | 1.8 | 28.00 | BA42 | TS/TBS71B4 | - | 2813 |
| 49.1 | 66 | 1.4 | 57.43 | BA42 | TS/TBS71A2 | - | 2817 |
| 48.6 | 67 | 1.3 | 57.43 | BA42 | TS/TBS63C2 | - | 2827 |
| 45.9 | 74 | 2.8 | 20.46 | BA52 | TS/TBS80A6 | - | 3086 |
| 44.1 | 76 | 1.6 | 31.27 | BA42 | TS/TBS71B4 | - | 2919 |
| 44.0 | 74 | 1.1 | 64.13 | BA42 | TS/TBS71A2 | - | 2922 |
| 43.6 | 77 | 2.6 | 31.63 | BA52 | TS/TBS71B4 | - | 3139 |
| 43.5 | 74 | 1.1 | 64.13 | BA42 | TS/TBS63C2 | - | 2933 |
| 43.5 | 75 | 2.0 | 64.87 | BA52 | TS/TBS71A2 | - | 3143 |
| 43.0 | 79 | 2.7 | 20.46 | BA52 | TS/TBS71C6 | - | 3154 |
| 43.0 | 75 | 2.0 | 64.87 | BA52 | TS/TBS63C2 | - | 3155 |
| 40.9 | 83 | 1.5 | 22.97 | BA42 | TS/TBS80A6 | - | 2994 |
| 40.9 | 82 | 1.5 | 33.78 | BA42 | TS/TBS71B4 | - | 2995 |
| 39.3 | 85 | 2.3 | 35.10 | BA52 | TS/TBS71B4 | - | 3250 |
| 38.3 | 89 | 1.4 | 22.97 | BA42 | TS/TBS71C6 | - | 3060 |
| 38.3 | 80 | 2.1 | 73.70 | BA53 | TS/TBS71A2 | - | 3280 |
| 37.9 | 81 | 2.0 | 73.70 | BA53 | TS/TBS63C2 | - | 3292 |
| 37.6 | 90 | 2.3 | 25.03 | BA52 | TS/TBS80A6 | - | 3300 |
| 35.7 | 91 | 1.7 | 79.07 | BA52 | TS/TBS71A2 | - | 3358 |
| 35.3 | 92 | 1.6 | 79.07 | BA52 | TS/TBS63C2 | - | 3370 |
| 35.2 | 96 | 2.2 | 25.03 | BA52 | TS/TBS71C6 | - | 3374 |
| 34.9 | 88 | 3.8 | 80.83 | BA73 | TS/TBS71A2 | 8568 | 4284 |
| 34.5 | 89 | 3.8 | 80.83 | BA73 | TS/TBS63C2 | 8599 | 4300 |
| 33.6 | 101 | 1.2 | 28.00 | BA42 | TS/TBS80A6 | - | 3198 |
| 32.9 | 102 | 2.0 | 41.97 | BA52 | TS/TBS71B4 | - | 3450 |
| 31.4 | 108 | 1.2 | 28.00 | BA42 | TS/TBS71C6 | - | 3269 |
| 30.2 | 102 | 1.6 | 93.33 | BA53 | TS/TBS71A2 | - | 3548 |

# 5.1 B/BA MOTORIDUTTORE (50Hz)



## 0.37 kW

| n2 [rpm] | M2 [Nm] | fs | i | Riduttore | Motore | Fr2 D-S-P [N] | Fr2 C [N] |
|---|---|---|---|---|---|---|---|
| 30.1 | 113 | 1.1 | 31.27 | BA42 | TS/TBS80A6 | - | 3317 |
| 29.9 | 103 | 1.6 | 93.33 | BA53 | TS/TBS63C2 | - | 3561 |
| 29.7 | 114 | 1.8 | 31.63 | BA52 | TS/TBS80A6 | - | 3568 |
| 29.3 | 115 | 1.0 | 47.12 | BA42 | TS/TBS71B4 | - | 3347 |
| 29.0 | 106 | 3.2 | 97.29 | BA73 | TS/TBS71A2 | 9115 | 4557 |
| 28.7 | 107 | 3.2 | 97.29 | BA73 | TS/TBS63C2 | 9147 | 4574 |
| 28.4 | 119 | 3.7 | 33.04 | BA72 | TS/TBS80A6 | 9172 | 4586 |
| 28.1 | 120 | 1.0 | 31.27 | BA42 | TS/TBS71C6 | - | 3391 |
| 27.8 | 122 | 1.0 | 33.78 | BA42 | TS/TBS80A6 | - | 3404 |
| 27.8 | 122 | 1.7 | 31.63 | BA52 | TS/TBS71C6 | - | 3647 |
| 26.9 | 125 | 1.8 | 51.34 | BA52 | TS/TBS71B4 | - | 3689 |
| 26.8 | 127 | 1.7 | 35.10 | BA52 | TS/TBS80A6 | - | 3694 |
| 26.1 | 122 | 3.7 | 52.83 | BA73 | TS/TBS71B4 | 9436 | 4718 |
| 26.0 | 130 | 1.0 | 33.78 | BA42 | TS/TBS71C6 | - | 3480 |
| 25.3 | 121 | 1.4 | 111.61 | BA53 | TS/TBS71A2 | - | 3766 |
| 25.2 | 122 | 3.7 | 111.74 | B063 | TS/TBS71A2 | 12000 | 4890 |
| 25.1 | 135 | 1.6 | 35.10 | BA52 | TS/TBS71C6 | - | 3776 |
| 25.0 | 123 | 3.7 | 111.74 | B063 | TS/TBS63C2 | 12000 | 4906 |
| 25.0 | 123 | 1.3 | 111.61 | BA53 | TS/TBS63C2 | - | 3780 |
| 23.4 | 131 | 2.6 | 120.34 | BA73 | TS/TBS71A2 | 9784 | 4892 |
| 23.2 | 132 | 2.5 | 120.34 | BA73 | TS/TBS63C2 | 9819 | 4910 |
| 23.0 | 147 | 2.8 | 40.87 | BA72 | TS/TBS80A6 | 9845 | 4923 |
| 22.7 | 135 | 3.3 | 124.20 | B063 | TS/TBS71A2 | 12000 | 5051 |
| 22.5 | 137 | 3.3 | 124.20 | B063 | TS/TBS63C2 | 12000 | 5068 |
| 22.4 | 151 | 1.4 | 41.97 | BA52 | TS/TBS80A6 | - | 3921 |
| 21.4 | 150 | 3.2 | 43.89 | BA73 | TS/TBS80A6 | 10000 | 5041 |
| 21.3 | 158 | 1.3 | 64.87 | BA52 | TS/TBS71B4 | - | 3989 |
| 21.1 | 151 | 3.0 | 65.35 | BA73 | TS/TBS71B4 | 10000 | 5065 |
| 21.0 | 162 | 1.3 | 41.97 | BA52 | TS/TBS71C6 | - | 4000 |
| 20.7 | 149 | 1.1 | 136.53 | BA53 | TS/TBS71A2 | - | 4000 |
| 20.6 | 165 | 2.2 | 45.64 | BA72 | TS/TBS80A6 | 10000 | 5107 |
| 20.4 | 158 | 4.0 | 43.22 | B063 | TS/TBS71C6 | 12000 | 5214 |
| 20.4 | 150 | 1.1 | 136.53 | BA53 | TS/TBS63C2 | - | 4000 |
| 20.3 | 151 | 3.0 | 139.15 | B063 | TS/TBS71A2 | 12000 | 5230 |
| 20.1 | 153 | 2.9 | 139.15 | B063 | TS/TBS63C2 | 12000 | 5247 |
| 20.0 | 159 | 3.8 | 69.16 | B063 | TS/TBS71B4 | 12000 | 5248 |
| 20.0 | 160 | 2.9 | 43.89 | BA73 | TS/TBS71C6 | 10000 | 5153 |
| 18.8 | 163 | 2.1 | 149.73 | BA73 | TS/TBS71A2 | 10000 | 5262 |
| 18.7 | 170 | 1.3 | 73.70 | BA53 | TS/TBS71B4 | - | 4000 |
| 18.6 | 165 | 2.0 | 149.73 | BA73 | TS/TBS63C2 | 10000 | 5280 |
| 18.5 | 174 | 3.6 | 50.81 | B063 | TS/TBS80A6 | 12000 | 5367 |

# 5.1 B/BA MOTORIDUTTORE (50Hz)



## 0.37 kW

| n2 [rpm] | M2 [Nm] | fs | i | Riduttore | Motore | Fr2 D-S-P [N] | Fr2 C [N] |
|---|---|---|---|---|---|---|---|
| 18.3 | 185 | 1.2 | 51.34 | BA52 | TS/TBS80A6 | - | 4000 |
| 17.9 | 171 | 2.6 | 157.42 | B063 | TS/TBS71A2 | 12000 | 5430 |
| 17.8 | 179 | 3.4 | 77.48 | B063 | TS/TBS71B4 | 12000 | 5431 |
| 17.8 | 181 | 2.6 | 52.83 | BA73 | TS/TBS80A6 | 10000 | 5362 |
| 17.7 | 173 | 2.6 | 157.42 | B063 | TS/TBS63C2 | 12000 | 5448 |
| 17.5 | 192 | 1.0 | 79.07 | BA52 | TS/TBS71B4 | - | 4000 |
| 17.3 | 185 | 3.4 | 50.81 | B063 | TS/TBS71C6 | 12000 | 5475 |
| 17.1 | 198 | 1.2 | 51.34 | BA52 | TS/TBS71C6 | - | 4000 |
| 17.1 | 198 | 1.9 | 54.94 | BA72 | TS/TBS80A6 | 10000 | 5433 |
| 17.1 | 186 | 2.4 | 80.83 | BA73 | TS/TBS71B4 | 10000 | 5437 |
| 16.7 | 193 | 2.5 | 52.83 | BA73 | TS/TBS71C6 | 10000 | 5482 |
| 16.5 | 195 | 3.2 | 56.93 | B063 | TS/TBS80A6 | 12000 | 5554 |
| 15.6 | 196 | 1.7 | 180.23 | BA73 | TS/TBS71A2 | 10000 | 5500 |
| 15.5 | 208 | 3.0 | 56.93 | B063 | TS/TBS71C6 | 12000 | 5665 |
| 15.5 | 198 | 1.7 | 180.23 | BA73 | TS/TBS63C2 | 10000 | 5500 |
| 15.3 | 208 | 2.9 | 90.33 | B063 | TS/TBS71B4 | 12000 | 5687 |
| 14.8 | 215 | 1.0 | 93.33 | BA53 | TS/TBS71B4 | - | 4000 |
| 14.4 | 223 | 2.1 | 65.35 | BA73 | TS/TBS80A6 | 10000 | 5500 |
| 14.2 | 224 | 2.0 | 97.29 | BA73 | TS/TBS71B4 | 10000 | 5500 |
| 13.8 | 245 | 1.5 | 67.96 | BA72 | TS/TBS80A6 | 10000 | 5500 |
| 13.6 | 236 | 2.7 | 69.16 | B063 | TS/TBS80A6 | 12000 | 5885 |
| 13.6 | 233 | 2.6 | 101.20 | B063 | TS/TBS71B4 | 12000 | 5883 |
| 13.6 | 236 | 3.8 | 69.14 | B083 | TS/TBS80A6 | 18000 | 9098 |
| 13.5 | 239 | 2.0 | 65.35 | BA73 | TS/TBS71C6 | 10000 | 5500 |
| 12.9 | 250 | 3.6 | 73.14 | B083 | TS/TBS80A6 | 18000 | 9257 |
| 12.8 | 252 | 0.9 | 73.70 | BA53 | TS/TBS80A6 | - | 4000 |
| 12.7 | 252 | 2.5 | 69.16 | B063 | TS/TBS71C6 | 12000 | 6001 |
| 12.6 | 243 | 1.4 | 222.93 | BA73 | TS/TBS71A2 | 10000 | 5500 |
| 12.5 | 245 | 1.4 | 222.93 | BA73 | TS/TBS63C2 | 10000 | 5500 |
| 12.3 | 258 | 2.3 | 111.74 | B063 | TS/TBS71B4 | 12000 | 6057 |
| 12.1 | 265 | 2.4 | 77.48 | B063 | TS/TBS80A6 | 12000 | 6085 |
| 11.6 | 276 | 3.2 | 80.76 | B083 | TS/TBS80A6 | 18000 | 9545 |
| 11.6 | 276 | 1.7 | 80.83 | BA73 | TS/TBS80A6 | 10000 | 5500 |
| 11.5 | 277 | 1.6 | 120.34 | BA73 | TS/TBS71B4 | 10000 | 5500 |
| 11.4 | 283 | 2.2 | 77.48 | B063 | TS/TBS71C6 | 12000 | 6203 |
| 11.1 | 286 | 2.1 | 124.20 | B063 | TS/TBS71B4 | 12000 | 6247 |
| 10.9 | 295 | 1.6 | 80.83 | BA73 | TS/TBS71C6 | 10000 | 5500 |
| 10.8 | 283 | 1.2 | 260.20 | BA73 | TS/TBS71A2 | 10000 | 5500 |
| 10.7 | 286 | 1.2 | 260.20 | BA73 | TS/TBS63C2 | 10000 | 5500 |
| 10.4 | 309 | 2.0 | 90.33 | B063 | TS/TBS80A6 | 12000 | 6362 |
| 10.2 | 315 | 2.8 | 92.19 | B083 | TS/TBS80A6 | 18000 | 9940 |

# 5.1 B/BA MOTORIDUTTORE (50Hz)



## 0.37 kW

| n2 [rpm] | M2 [Nm] | fs | i | Riduttore | Motore | Fr2 D-S-P [N] | Fr2 C [N] |
|---|---|---|---|---|---|---|---|
| 9.9 | 321 | 1.9 | 139.15 | B063 | TS/TBS71B4 | 12000 | 6455 |
| 9.7 | 330 | 1.9 | 90.33 | B063 | TS/TBS71C6 | 12000 | 6484 |
| 9.7 | 332 | 1.4 | 97.29 | BA73 | TS/TBS80A6 | 10000 | 5500 |
| 9.3 | 346 | 1.8 | 101.20 | B063 | TS/TBS80A6 | 12000 | 6573 |
| 9.3 | 344 | 2.6 | 100.57 | B083 | TS/TBS80A6 | 18000 | 10207 |
| 9.2 | 345 | 1.3 | 149.73 | BA73 | TS/TBS71B4 | 10000 | 5500 |
| 9.0 | 355 | 1.3 | 97.29 | BA73 | TS/TBS71C6 | 10000 | 5500 |
| 8.9 | 360 | 2.5 | 105.29 | B083 | TS/TBS80A6 | 18000 | 10350 |
| 8.8 | 363 | 1.7 | 157.42 | B063 | TS/TBS71B4 | 12000 | 6686 |
| 8.7 | 369 | 1.7 | 101.20 | B063 | TS/TBS71C6 | 12000 | 6697 |
| 8.4 | 382 | 1.7 | 111.74 | B063 | TS/TBS80A6 | 12000 | 6759 |
| 8.1 | 397 | 2.2 | 116.25 | B083 | TS/TBS80A6 | 18000 | 10664 |
| 7.9 | 408 | 1.5 | 111.74 | B063 | TS/TBS71C6 | 12000 | 6885 |
| 7.8 | 411 | 1.1 | 120.34 | BA73 | TS/TBS80A6 | 10000 | 5500 |
| 7.7 | 415 | 1.1 | 180.23 | BA73 | TS/TBS71B4 | 10000 | 5500 |
| 7.6 | 424 | 1.5 | 124.20 | B063 | TS/TBS80A6 | 12000 | 6962 |
| 7.4 | 433 | 2.1 | 126.76 | B083 | TS/TBS80A6 | 18000 | 10945 |
| 7.3 | 439 | 1.1 | 120.34 | BA73 | TS/TBS71C6 | 10000 | 5500 |
| 7.1 | 453 | 1.4 | 124.20 | B063 | TS/TBS71C6 | 12000 | 7090 |
| 6.8 | 475 | 1.3 | 139.15 | B063 | TS/TBS80A6 | 12000 | 7183 |
| 6.5 | 495 | 1.8 | 144.77 | B083 | TS/TBS80A6 | 18000 | 11387 |
| 6.5 | 494 | 3.8 | 144.69 | B103 | TS/TBS80A6 | 22000 | 14062 |
| 6.3 | 508 | 1.2 | 139.15 | B063 | TS/TBS71C6 | 12000 | 7313 |
| 6.3 | 512 | 0.9 | 149.73 | BA73 | TS/TBS80A6 | 10000 | 5500 |
| 6.0 | 538 | 1.2 | 157.42 | B063 | TS/TBS80A6 | 12000 | 7427 |
| 5.7 | 565 | 3.3 | 165.25 | B103 | TS/TBS80A6 | 22000 | 14653 |
| 5.6 | 575 | 1.1 | 157.42 | B063 | TS/TBS71C6 | 12000 | 7558 |

## 0.55 kW

| n2 [rpm] | M2 [Nm] | fs | i | Riduttore | Motore | Fr2 D-S-P [N] | Fr2 C [N] |
|---|---|---|---|---|---|---|---|
| 264.5 | 18 | 3.7 | 10.62 | BA42 | TS/TBS71B2 | - | 1607 |
| 217.0 | 22 | 3.0 | 12.95 | BA42 | TS/TBS71B2 | - | 1716 |
| 194.4 | 25 | 2.7 | 14.46 | BA42 | TS/TBS71B2 | - | 1781 |
| 183.8 | 27 | 3.3 | 7.62 | BA42 | TS/TBS80A4 | - | 1814 |
| 179.9 | 28 | 3.2 | 7.62 | BA42 | TS/TBS71C4 | - | 1827 |
| 170.6 | 28 | 3.2 | 16.47 | BA42 | TS/TBS71B2 | - | 1860 |
| 131.8 | 38 | 2.4 | 10.62 | BA42 | TS/TBS80A4 | - | 2027 |
| 129.0 | 39 | 2.3 | 10.62 | BA42 | TS/TBS71C4 | - | 2042 |
| 122.3 | 39 | 2.3 | 22.97 | BA42 | TS/TBS71B2 | - | 2078 |
| 122.1 | 41 | 2.3 | 7.62 | BA42 | TS/TBS80B6 | - | 2079 |

# 5.1 B/BA MOTORIDUTTORE (50Hz)



## 0.55 kW

| n2 [rpm] | M2 [Nm] | fs | i | Riduttore | Motore | Fr2 D-S-P [N] | Fr2 C [N] |
|---|---|---|---|---|---|---|---|
| 121.0 | 41 | 3.9 | 11.57 | BA52 | TS/TBS80A4 | - | 2235 |
| 118.4 | 42 | 3.8 | 11.57 | BA52 | TS/TBS71C4 | - | 2251 |
| 117.5 | 43 | 3.9 | 7.91 | BA52 | TS/TBS80B6 | - | 2256 |
| 112.3 | 43 | 3.5 | 25.03 | BA52 | TS/TBS71B2 | - | 2291 |
| 108.1 | 46 | 2.0 | 12.95 | BA42 | TS/TBS80A4 | - | 2165 |
| 105.8 | 47 | 1.9 | 12.95 | BA42 | TS/TBS71C4 | - | 2181 |
| 100.4 | 48 | 1.9 | 28.00 | BA42 | TS/TBS71B2 | - | 2220 |
| 98.3 | 51 | 3.3 | 9.46 | BA52 | TS/TBS80B6 | - | 2395 |
| 96.8 | 52 | 1.7 | 14.46 | BA42 | TS/TBS80A4 | - | 2246 |
| 95.7 | 52 | 3.1 | 14.63 | BA52 | TS/TBS80A4 | - | 2416 |
| 94.8 | 53 | 1.7 | 14.46 | BA42 | TS/TBS71C4 | - | 2263 |
| 93.7 | 53 | 3.0 | 14.63 | BA52 | TS/TBS71C4 | - | 2434 |
| 89.9 | 54 | 1.7 | 31.27 | BA42 | TS/TBS71B2 | - | 2303 |
| 88.8 | 54 | 2.8 | 31.63 | BA52 | TS/TBS71B2 | - | 2477 |
| 87.5 | 58 | 1.6 | 10.62 | BA42 | TS/TBS80B6 | - | 2323 |
| 85.0 | 59 | 2.0 | 16.47 | BA42 | TS/TBS80A4 | - | 2346 |
| 83.2 | 60 | 2.0 | 16.47 | BA42 | TS/TBS71C4 | - | 2363 |
| 83.2 | 58 | 1.6 | 33.78 | BA42 | TS/TBS71B2 | - | 2363 |
| 81.8 | 61 | 3.3 | 17.11 | BA52 | TS/TBS80A4 | - | 2546 |
| 80.4 | 63 | 2.7 | 11.57 | BA52 | TS/TBS80B6 | - | 2561 |
| 80.1 | 62 | 3.2 | 17.11 | BA52 | TS/TBS71C4 | - | 2564 |
| 80.1 | 60 | 2.5 | 35.10 | BA52 | TS/TBS71B2 | - | 2564 |
| 71.8 | 70 | 1.3 | 12.95 | BA42 | TS/TBS80B6 | - | 2481 |
| 68.4 | 73 | 2.7 | 20.46 | BA52 | TS/TBS80A4 | - | 2702 |
| 67.0 | 75 | 2.7 | 20.46 | BA52 | TS/TBS71C4 | - | 2722 |
| 67.0 | 72 | 2.1 | 41.97 | BA52 | TS/TBS71B2 | - | 2722 |
| 64.3 | 78 | 1.2 | 14.46 | BA42 | TS/TBS80B6 | - | 2574 |
| 63.6 | 79 | 2.1 | 14.63 | BA52 | TS/TBS80B6 | - | 2769 |
| 60.9 | 82 | 1.5 | 22.97 | BA42 | TS/TBS80A4 | - | 2621 |
| 59.6 | 84 | 1.4 | 22.97 | BA42 | TS/TBS71C4 | - | 2640 |
| 59.6 | 81 | 1.1 | 47.12 | BA42 | TS/TBS71B2 | - | 2640 |
| 56.5 | 89 | 1.4 | 16.47 | BA42 | TS/TBS80B6 | - | 2689 |
| 55.9 | 89 | 2.2 | 25.03 | BA52 | TS/TBS80A4 | - | 2890 |
| 54.7 | 91 | 2.2 | 25.03 | BA52 | TS/TBS71C4 | - | 2911 |
| 54.7 | 88 | 1.9 | 51.34 | BA52 | TS/TBS71B2 | - | 2911 |
| 54.4 | 93 | 2.3 | 17.11 | BA52 | TS/TBS80B6 | - | 2918 |
| 53.2 | 86 | 3.9 | 52.83 | BA73 | TS/TBS71B2 | 7445 | 3723 |
| 50.0 | 100 | 1.2 | 28.00 | BA42 | TS/TBS80A4 | - | 2800 |
| 48.9 | 102 | 1.2 | 28.00 | BA42 | TS/TBS71C4 | - | 2820 |
| 45.5 | 111 | 1.9 | 20.46 | BA52 | TS/TBS80B6 | - | 3097 |
| 44.8 | 111 | 1.1 | 31.27 | BA42 | TS/TBS80A4 | - | 2905 |

# 5.1 B/BA MOTORIDUTTORE (50Hz)



## 0.55 kW

| n2 [rpm] | M2 [Nm] | fs | i | Riduttore | Motore | Fr2 D-S-P [N] | Fr2 C [N] |
|---|---|---|---|---|---|---|---|
| 44.3 | 113 | 1.8 | 31.63 | BA52 | TS/TBS80A4 | - | 3124 |
| 43.8 | 114 | 1.1 | 31.27 | BA42 | TS/TBS71C4 | - | 2926 |
| 43.3 | 115 | 1.7 | 31.63 | BA52 | TS/TBS71C4 | - | 3147 |
| 43.3 | 111 | 1.3 | 64.87 | BA52 | TS/TBS71B2 | - | 3147 |
| 43.0 | 106 | 3.2 | 65.35 | BA73 | TS/TBS71B2 | 7992 | 3996 |
| 42.4 | 118 | 3.6 | 33.04 | BA72 | TS/TBS80A4 | 8031 | 4016 |
| 41.4 | 120 | 1.0 | 33.78 | BA42 | TS/TBS80A4 | - | 2981 |
| 40.6 | 123 | 1.0 | 33.78 | BA42 | TS/TBS71C4 | - | 3002 |
| 40.5 | 125 | 1.0 | 22.97 | BA42 | TS/TBS80B6 | - | 3004 |
| 39.9 | 125 | 1.6 | 35.10 | BA52 | TS/TBS80A4 | - | 3235 |
| 39.0 | 128 | 1.6 | 35.10 | BA52 | TS/TBS71C4 | - | 3258 |
| 38.1 | 120 | 1.4 | 73.70 | BA53 | TS/TBS71B2 | - | 3284 |
| 37.2 | 136 | 1.5 | 25.03 | BA52 | TS/TBS80B6 | - | 3312 |
| 36.3 | 126 | 3.6 | 77.48 | B063 | TS/TBS71B2 | 12000 | 4315 |
| 35.5 | 136 | 1.1 | 79.07 | BA52 | TS/TBS71B2 | - | 3362 |
| 34.8 | 131 | 2.6 | 80.83 | BA73 | TS/TBS71B2 | 8579 | 4289 |
| 34.3 | 146 | 2.7 | 40.87 | BA72 | TS/TBS80A4 | 8621 | 4311 |
| 33.9 | 149 | 3.0 | 27.45 | BA72 | TS/TBS80B6 | 8653 | 4326 |
| 33.4 | 150 | 1.3 | 41.97 | BA52 | TS/TBS80A4 | - | 3433 |
| 32.6 | 153 | 1.3 | 41.97 | BA52 | TS/TBS71C4 | - | 3458 |
| 31.9 | 148 | 3.0 | 43.89 | BA73 | TS/TBS80A4 | 8828 | 4414 |
| 31.2 | 151 | 3.0 | 43.89 | BA73 | TS/TBS71C4 | 8892 | 4446 |
| 31.1 | 147 | 3.1 | 90.33 | B063 | TS/TBS71B2 | 12000 | 4521 |
| 30.7 | 163 | 2.2 | 45.64 | BA72 | TS/TBS80A4 | 8944 | 4472 |
| 30.1 | 152 | 1.1 | 93.33 | BA53 | TS/TBS71B2 | - | 3553 |
| 29.4 | 171 | 1.2 | 31.63 | BA52 | TS/TBS80B6 | - | 3581 |
| 28.9 | 158 | 2.1 | 97.29 | BA73 | TS/TBS71B2 | 9125 | 4563 |
| 28.1 | 179 | 2.5 | 33.04 | BA72 | TS/TBS80B6 | 9204 | 4602 |
| 27.8 | 164 | 2.7 | 101.20 | B063 | TS/TBS71B2 | 12000 | 4678 |
| 27.8 | 172 | 3.7 | 33.43 | B063 | TS/TBS80B6 | 12000 | 4666 |
| 27.6 | 172 | 3.5 | 50.81 | B063 | TS/TBS80A4 | 12000 | 4681 |
| 27.3 | 183 | 1.2 | 51.34 | BA52 | TS/TBS80A4 | - | 3672 |
| 27.0 | 175 | 3.4 | 50.81 | B063 | TS/TBS71C4 | 12000 | 4711 |
| 26.7 | 187 | 1.2 | 51.34 | BA52 | TS/TBS71C4 | - | 3698 |
| 26.5 | 190 | 1.1 | 35.10 | BA52 | TS/TBS80B6 | - | 3707 |
| 26.5 | 178 | 2.5 | 52.83 | BA73 | TS/TBS80A4 | 9391 | 4696 |
| 25.9 | 182 | 2.5 | 52.83 | BA73 | TS/TBS71C4 | 9459 | 4730 |
| 25.5 | 196 | 1.8 | 54.94 | BA72 | TS/TBS80A4 | 9515 | 4757 |
| 25.1 | 181 | 2.5 | 111.74 | B063 | TS/TBS71B2 | 12000 | 4819 |
| 24.6 | 192 | 3.1 | 56.93 | B063 | TS/TBS80A4 | 12000 | 4842 |
| 24.1 | 198 | 3.2 | 38.58 | B063 | TS/TBS80B6 | 12000 | 4868 |

# 5.1 B/BA MOTORIDUTTORE (50Hz)



## 0.55 kW

| n2 [rpm] | M2 [Nm] | fs | i | Riduttore | Motore | Fr2 D-S-P [N] | Fr2 C [N] |
|---|---|---|---|---|---|---|---|
| 24.1 | 196 | 3.1 | 56.93 | B063 | TS/TBS71C4 | 12000 | 4873 |
| 23.4 | 195 | 1.7 | 120.34 | BA73 | TS/TBS71B2 | 9796 | 4898 |
| 22.8 | 221 | 1.9 | 40.87 | BA72 | TS/TBS80B6 | 9880 | 4940 |
| 22.6 | 202 | 2.2 | 124.20 | B063 | TS/TBS71B2 | 12000 | 4972 |
| 22.2 | 227 | 0.9 | 41.97 | BA52 | TS/TBS80B6 | - | 3935 |
| 22.0 | 215 | 3.9 | 63.74 | B083 | TS/TBS80A4 | 18000 | 7750 |
| 21.5 | 222 | 2.8 | 43.22 | B063 | TS/TBS80B6 | 12000 | 5033 |
| 21.4 | 221 | 2.0 | 65.35 | BA73 | TS/TBS80A4 | 10000 | 5041 |
| 21.2 | 225 | 2.1 | 43.89 | BA73 | TS/TBS80B6 | 10000 | 5059 |
| 21.0 | 225 | 2.0 | 65.35 | BA73 | TS/TBS71C4 | 10000 | 5077 |
| 20.6 | 242 | 1.4 | 67.96 | BA72 | TS/TBS80A4 | 10000 | 5107 |
| 20.5 | 233 | 3.8 | 45.44 | B083 | TS/TBS80B6 | 18000 | 7918 |
| 20.4 | 247 | 1.5 | 45.64 | BA72 | TS/TBS80B6 | 10000 | 5126 |
| 20.2 | 234 | 2.6 | 69.16 | B063 | TS/TBS80A4 | 12000 | 5126 |
| 20.2 | 226 | 2.0 | 139.15 | B063 | TS/TBS71B2 | 12000 | 5141 |
| 20.2 | 233 | 3.6 | 69.14 | B083 | TS/TBS80A4 | 18000 | 7947 |
| 19.8 | 239 | 2.5 | 69.16 | B063 | TS/TBS71C4 | 12000 | 5159 |
| 19.1 | 247 | 3.4 | 73.14 | B083 | TS/TBS80A4 | 18000 | 8085 |
| 18.8 | 243 | 1.4 | 149.73 | BA73 | TS/TBS71B2 | 10000 | 5268 |
| 18.3 | 261 | 2.4 | 50.81 | B063 | TS/TBS80B6 | 12000 | 5274 |
| 18.2 | 263 | 3.4 | 51.19 | B083 | TS/TBS80B6 | 18000 | 8212 |
| 18.1 | 262 | 2.3 | 77.48 | B063 | TS/TBS80A4 | 12000 | 5297 |
| 17.9 | 256 | 1.8 | 157.42 | B063 | TS/TBS71B2 | 12000 | 5328 |
| 17.7 | 267 | 2.2 | 77.48 | B063 | TS/TBS71C4 | 12000 | 5331 |
| 17.6 | 271 | 1.7 | 52.83 | BA73 | TS/TBS80B6 | 10000 | 5382 |
| 17.3 | 273 | 3.1 | 80.76 | B083 | TS/TBS80A4 | 18000 | 8333 |
| 17.3 | 273 | 1.6 | 80.83 | BA73 | TS/TBS80A4 | 10000 | 5411 |
| 17.0 | 279 | 1.6 | 80.83 | BA73 | TS/TBS71C4 | 10000 | 5450 |
| 16.9 | 298 | 1.2 | 54.94 | BA72 | TS/TBS80B6 | 10000 | 5452 |
| 16.7 | 285 | 3.1 | 55.52 | B083 | TS/TBS80B6 | 18000 | 8418 |
| 16.3 | 292 | 2.2 | 56.93 | B063 | TS/TBS80B6 | 12000 | 5448 |
| 15.6 | 293 | 1.2 | 180.23 | BA73 | TS/TBS71B2 | 10000 | 5500 |
| 15.5 | 305 | 2.0 | 90.33 | B063 | TS/TBS80A4 | 12000 | 5534 |
| 15.5 | 308 | 2.9 | 59.96 | B083 | TS/TBS80B6 | 18000 | 8616 |
| 15.2 | 312 | 1.9 | 90.33 | B063 | TS/TBS71C4 | 12000 | 5568 |
| 15.2 | 311 | 2.7 | 92.19 | B083 | TS/TBS80A4 | 18000 | 8675 |
| 14.6 | 327 | 2.7 | 63.74 | B083 | TS/TBS80B6 | 18000 | 8777 |
| 14.4 | 329 | 1.4 | 97.29 | BA73 | TS/TBS80A4 | 10000 | 5500 |
| 14.2 | 335 | 1.4 | 65.35 | BA73 | TS/TBS80B6 | 10000 | 5500 |
| 14.1 | 336 | 1.3 | 97.29 | BA73 | TS/TBS71C4 | 10000 | 5500 |
| 13.9 | 340 | 2.5 | 100.57 | B083 | TS/TBS80A4 | 18000 | 8905 |

# 5.1 B/BA MOTORIDUTTORE (50Hz)



## 0.55 kW

| n2 [rpm] | M2 [Nm] | fs | i | Riduttore | Motore | Fr2 D-S-P [N] | Fr2 C [N] |
|---|---|---|---|---|---|---|---|
| 13.8 | 342 | 1.8 | 101.20 | B063 | TS/TBS80A4 | 12000 | 5713 |
| 13.7 | 368 | 1.0 | 67.96 | BA72 | TS/TBS80B6 | 10000 | 5500 |
| 13.5 | 349 | 1.7 | 101.20 | B063 | TS/TBS71C4 | 12000 | 5748 |
| 13.5 | 355 | 2.5 | 69.14 | B083 | TS/TBS80B6 | 18000 | 8994 |
| 13.4 | 355 | 1.8 | 69.16 | B063 | TS/TBS80B6 | 12000 | 5754 |
| 13.3 | 356 | 2.4 | 105.29 | B083 | TS/TBS80A4 | 18000 | 9029 |
| 12.7 | 376 | 2.4 | 73.14 | B083 | TS/TBS80B6 | 18000 | 9146 |
| 12.5 | 377 | 1.6 | 111.74 | B063 | TS/TBS80A4 | 12000 | 5872 |
| 12.3 | 386 | 1.6 | 111.74 | B063 | TS/TBS71C4 | 12000 | 5907 |
| 12.0 | 398 | 1.6 | 77.48 | B063 | TS/TBS80B6 | 12000 | 5936 |
| 12.0 | 393 | 2.2 | 116.25 | B083 | TS/TBS80A4 | 18000 | 9300 |
| 11.6 | 406 | 1.1 | 120.34 | BA73 | TS/TBS80A4 | 10000 | 5500 |
| 11.5 | 415 | 2.2 | 80.76 | B083 | TS/TBS80B6 | 18000 | 9419 |
| 11.5 | 415 | 1.1 | 80.83 | BA73 | TS/TBS80B6 | 10000 | 5500 |
| 11.4 | 415 | 1.1 | 120.34 | BA73 | TS/TBS71C4 | 10000 | 5500 |
| 11.3 | 419 | 1.4 | 124.20 | B063 | TS/TBS80A4 | 12000 | 6043 |
| 11.0 | 429 | 1.4 | 124.20 | B063 | TS/TBS71C4 | 12000 | 6079 |
| 11.0 | 428 | 2.0 | 126.76 | B083 | TS/TBS80A4 | 18000 | 9541 |
| 10.3 | 464 | 1.4 | 90.33 | B063 | TS/TBS80B6 | 12000 | 6186 |
| 10.1 | 470 | 1.3 | 139.15 | B063 | TS/TBS80A4 | 12000 | 6230 |
| 10.1 | 473 | 1.9 | 92.19 | B083 | TS/TBS80B6 | 18000 | 9793 |
| 10.1 | 474 | 4.0 | 92.31 | B103 | TS/TBS80B6 | 22000 | 12129 |
| 9.8 | 480 | 1.2 | 139.15 | B063 | TS/TBS71C4 | 12000 | 6266 |
| 9.7 | 489 | 1.7 | 144.77 | B083 | TS/TBS80A4 | 18000 | 9920 |
| 9.7 | 489 | 3.7 | 144.69 | B103 | TS/TBS80A4 | 22000 | 12285 |
| 9.6 | 499 | 0.9 | 97.29 | BA73 | TS/TBS80B6 | 10000 | 5500 |
| 9.2 | 520 | 1.2 | 101.20 | B063 | TS/TBS80B6 | 12000 | 6373 |
| 9.2 | 516 | 1.7 | 100.57 | B083 | TS/TBS80B6 | 18000 | 10045 |
| 8.9 | 532 | 1.1 | 157.42 | B063 | TS/TBS80A4 | 12000 | 6435 |
| 8.8 | 541 | 1.7 | 105.29 | B083 | TS/TBS80B6 | 18000 | 10179 |
| 8.8 | 541 | 3.5 | 105.44 | B103 | TS/TBS80B6 | 22000 | 12635 |
| 8.7 | 543 | 1.1 | 157.42 | B063 | TS/TBS71C4 | 12000 | 6471 |
| 8.5 | 558 | 3.2 | 165.25 | B103 | TS/TBS80A4 | 22000 | 12796 |
| 8.3 | 574 | 1.1 | 111.74 | B063 | TS/TBS80B6 | 12000 | 6538 |
| 8.1 | 589 | 3.2 | 114.80 | B103 | TS/TBS80B6 | 22000 | 12968 |
| 8.0 | 597 | 1.5 | 116.25 | B083 | TS/TBS80B6 | 18000 | 10473 |
| 7.7 | 618 | 3.1 | 120.42 | B103 | TS/TBS80B6 | 22000 | 13158 |
| 7.5 | 638 | 1.0 | 124.20 | B063 | TS/TBS80B6 | 12000 | 6714 |
| 7.3 | 651 | 1.4 | 126.76 | B083 | TS/TBS80B6 | 18000 | 10734 |
| 7.0 | 682 | 2.8 | 132.87 | B103 | TS/TBS80B6 | 22000 | 13557 |
| 6.4 | 743 | 1.2 | 144.77 | B083 | TS/TBS80B6 | 18000 | 11142 |

# 5.1 B/BA MOTORIDUTTORE (50Hz)



## 0.55 kW

| n2 [rpm] | M2 [Nm] | fs | i | Riduttore | Motore | Fr2 D-S-P [N] | Fr2 C [N] |
|---|---|---|---|---|---|---|---|
| 6.4 | 743 | 2.5 | 144.69 | B103 | TS/TBS80B6 | 22000 | 13909 |
| 5.6 | 848 | 2.2 | 165.25 | B103 | TS/TBS80B6 | 22000 | 14473 |

## 0.75 kW

| n2 [rpm] | M2 [Nm] | fs | i | Riduttore | Motore | Fr2 D-S-P [N] | Fr2 C [N] |
|---|---|---|---|---|---|---|---|
| 375.5 | 17 | 3.9 | 7.62 | BA42 | TP/TBP80A2 | - | 1430 |
| 372.9 | 18 | 3.8 | 7.62 | BA42 | TH/TBH80A2 | - | 1433 |
| 369.0 | 18 | 3.8 | 7.62 | BA42 | TBS80A2 | - | 1438 |
| 367.6 | 18 | 3.8 | 7.62 | BA42 | TBS71C2 | - | 1440 |
| 269.2 | 24 | 2.8 | 10.62 | BA42 | TP/TBP80A2 | - | 1598 |
| 267.3 | 25 | 2.7 | 10.62 | BA42 | TH/TBH80A2 | - | 1601 |
| 264.5 | 25 | 2.7 | 10.62 | BA42 | TBS80A2 | - | 1607 |
| 263.6 | 25 | 2.7 | 10.62 | BA42 | TBS71C2 | - | 1609 |
| 220.9 | 30 | 2.3 | 12.95 | BA42 | TP/TBP80A2 | - | 1706 |
| 219.3 | 30 | 2.3 | 12.95 | BA42 | TH/TBH80A2 | - | 1710 |
| 217.0 | 30 | 2.2 | 12.95 | BA42 | TBS80A2 | - | 1716 |
| 216.3 | 30 | 2.2 | 12.95 | BA42 | TBS71C2 | - | 1719 |
| 197.8 | 33 | 2.0 | 14.46 | BA42 | TP/TBP80A2 | - | 1770 |
| 196.4 | 33 | 2.0 | 14.46 | BA42 | TH/TBH80A2 | - | 1775 |
| 195.5 | 34 | 3.6 | 14.63 | BA52 | TP/TBP80A2 | - | 1904 |
| 194.4 | 34 | 2.0 | 14.46 | BA42 | TBS80A2 | - | 1781 |
| 194.2 | 34 | 3.5 | 14.63 | BA52 | TH/TBH80A2 | - | 1909 |
| 193.7 | 34 | 2.0 | 14.46 | BA42 | TBS71C2 | - | 1783 |
| 192.1 | 34 | 3.5 | 14.63 | BA52 | TBS80A2 | - | 1915 |
| 191.4 | 34 | 3.5 | 14.63 | BA52 | TBS71C2 | - | 1918 |
| 189.1 | 36 | 2.5 | 7.62 | BA42 | TP/TBP80B4 | - | 1797 |
| 187.8 | 36 | 2.5 | 7.62 | BA42 | TH/TBH80B4 | - | 1801 |
| 183.8 | 37 | 2.4 | 7.62 | BA42 | TBS80B4 | - | 1814 |
| 173.6 | 38 | 2.4 | 16.47 | BA42 | TP/TBP80A2 | - | 1849 |
| 172.4 | 38 | 2.4 | 16.47 | BA42 | TH/TBH80A2 | - | 1853 |
| 170.6 | 38 | 2.3 | 16.47 | BA42 | TBS80A2 | - | 1860 |
| 170.0 | 39 | 2.3 | 16.47 | BA42 | TBS71C2 | - | 1862 |
| 167.1 | 39 | 3.8 | 17.11 | BA52 | TP/TBP80A2 | - | 2006 |
| 166.0 | 40 | 3.8 | 17.11 | BA52 | TH/TBH80A2 | - | 2011 |
| 164.2 | 40 | 3.8 | 17.11 | BA52 | TBS80A2 | - | 2018 |
| 163.6 | 40 | 3.7 | 17.11 | BA52 | TBS71C2 | - | 2021 |
| 152.2 | 45 | 3.6 | 9.46 | BA52 | TP/TBP80B4 | - | 2070 |
| 151.1 | 45 | 3.6 | 9.46 | BA52 | TH/TBH80B4 | - | 2075 |
| 148.0 | 46 | 3.5 | 9.46 | BA52 | TBS80B4 | - | 2090 |
| 139.8 | 47 | 3.2 | 20.46 | BA52 | TP/TBP80A2 | - | 2130 |

# 5.1 B/BA MOTORIDUTTORE (50Hz)



## 0.75 kW

| n2 [rpm] | M2 [Nm] | fs | i | Riduttore | Motore | Fr2 D-S-P [N] | Fr2 C [N] |
|---|---|---|---|---|---|---|---|
| 138.8 | 47 | 3.2 | 20.46 | BA52 | TH/TBH80A2 | - | 2135 |
| 137.3 | 48 | 3.1 | 20.46 | BA52 | TBS80A2 | - | 2142 |
| 136.8 | 48 | 3.1 | 20.46 | BA52 | TBS71C2 | - | 2145 |
| 135.5 | 50 | 1.8 | 10.62 | BA42 | TP/TBP80B4 | - | 2008 |
| 134.6 | 51 | 1.8 | 10.62 | BA42 | TH/TBH80B4 | - | 2013 |
| 131.8 | 52 | 1.7 | 10.62 | BA42 | TBS80B4 | - | 2027 |
| 124.5 | 53 | 1.7 | 22.97 | BA42 | TP/TBP80A2 | - | 2066 |
| 124.4 | 55 | 2.9 | 11.57 | BA52 | TP/TBP80B4 | - | 2214 |
| 123.6 | 53 | 1.7 | 22.97 | BA42 | TH/TBH80A2 | - | 2071 |
| 123.6 | 55 | 2.9 | 11.57 | BA52 | TH/TBH80B4 | - | 2219 |
| 122.3 | 54 | 1.7 | 22.97 | BA42 | TBS80A2 | - | 2078 |
| 121.9 | 54 | 1.7 | 22.97 | BA42 | TBS71C2 | - | 2081 |
| 121.0 | 56 | 2.8 | 11.57 | BA52 | TBS80B4 | - | 2235 |
| 120.8 | 57 | 1.7 | 7.62 | BA42 | TBS80C6 | - | 2087 |
| 118.8 | 58 | 2.9 | 7.91 | BA52 | TH/TBH90S6 | - | 2248 |
| 118.8 | 58 | 2.9 | 7.91 | BA52 | TP/TBP90S6 | - | 2248 |
| 116.3 | 59 | 2.8 | 7.91 | BA52 | TBS80C6 | - | 2264 |
| 116.3 | 59 | 2.8 | 7.91 | BA52 | TBS90S6 | - | 2264 |
| 114.3 | 57 | 2.6 | 25.03 | BA52 | TP/TBP80A2 | - | 2278 |
| 113.5 | 58 | 2.6 | 25.03 | BA52 | TH/TBH80A2 | - | 2283 |
| 112.3 | 58 | 2.6 | 25.03 | BA52 | TBS80A2 | - | 2291 |
| 111.9 | 59 | 2.6 | 25.03 | BA52 | TBS71C2 | - | 2294 |
| 111.2 | 61 | 1.5 | 12.95 | BA42 | TP/TBP80B4 | - | 2145 |
| 110.4 | 62 | 1.5 | 12.95 | BA42 | TH/TBH80B4 | - | 2150 |
| 108.1 | 63 | 1.4 | 12.95 | BA42 | TBS80B4 | - | 2165 |
| 102.1 | 64 | 1.4 | 28.00 | BA42 | TP/TBP80A2 | - | 2207 |
| 101.4 | 65 | 1.4 | 28.00 | BA42 | TH/TBH80A2 | - | 2212 |
| 100.4 | 65 | 1.4 | 28.00 | BA42 | TBS80A2 | - | 2220 |
| 100.0 | 66 | 1.4 | 28.00 | BA42 | TBS71C2 | - | 2222 |
| 99.6 | 68 | 1.3 | 14.46 | BA42 | TP/TBP80B4 | - | 2225 |
| 99.3 | 69 | 2.4 | 9.46 | BA52 | TH/TBH90S6 | - | 2386 |
| 99.3 | 69 | 2.4 | 9.46 | BA52 | TP/TBP90S6 | - | 2386 |
| 98.9 | 69 | 1.3 | 14.46 | BA42 | TH/TBH80B4 | - | 2231 |
| 98.5 | 69 | 2.3 | 14.63 | BA52 | TP/TBP80B4 | - | 2393 |
| 97.8 | 70 | 2.3 | 14.63 | BA52 | TH/TBH80B4 | - | 2399 |
| 97.2 | 71 | 2.4 | 9.46 | BA52 | TBS80C6 | - | 2403 |
| 97.2 | 71 | 2.4 | 9.46 | BA52 | TBS90S6 | - | 2403 |
| 96.8 | 70 | 1.3 | 14.46 | BA42 | TBS80B4 | - | 2246 |
| 95.7 | 71 | 2.3 | 14.63 | BA52 | TBS80B4 | - | 2416 |
| 91.5 | 72 | 1.3 | 31.27 | BA42 | TP/TBP80A2 | - | 2289 |
| 90.8 | 72 | 1.2 | 31.27 | BA42 | TH/TBH80A2 | - | 2295 |

# 5.1 B/BA MOTORIDUTTORE (50Hz)



## 0.75 kW

| n2 [rpm] | M2 [Nm] | fs | i | Riduttore | Motore | Fr2 D-S-P [N] | Fr2 C [N] |
|---|---|---|---|---|---|---|---|
| 90.4 | 73 | 2.1 | 31.63 | BA52 | TP/TBP80A2 | - | 2462 |
| 89.9 | 73 | 1.2 | 31.27 | BA42 | TBS80A2 | - | 2303 |
| 89.8 | 73 | 2.1 | 31.63 | BA52 | TH/TBH80A2 | - | 2468 |
| 89.6 | 73 | 1.2 | 31.27 | BA42 | TBS71C2 | - | 2306 |
| 88.8 | 74 | 2.0 | 31.63 | BA52 | TBS80A2 | - | 2477 |
| 88.5 | 74 | 2.0 | 31.63 | BA52 | TBS71C2 | - | 2480 |
| 87.4 | 78 | 1.5 | 16.47 | BA42 | TP/TBP80B4 | - | 2324 |
| 86.8 | 78 | 1.5 | 16.47 | BA42 | TH/TBH80B4 | - | 2330 |
| 86.6 | 79 | 1.2 | 10.62 | BA42 | TBS80C6 | - | 2332 |
| 85.0 | 80 | 1.5 | 16.47 | BA42 | TBS80B4 | - | 2346 |
| 84.7 | 78 | 1.2 | 33.78 | BA42 | TP/TBP80A2 | - | 2349 |
| 84.2 | 81 | 2.5 | 17.11 | BA52 | TP/TBP80B4 | - | 2522 |
| 84.1 | 78 | 1.2 | 33.78 | BA42 | TH/TBH80A2 | - | 2355 |
| 83.6 | 81 | 2.5 | 17.11 | BA52 | TH/TBH80B4 | - | 2528 |
| 83.2 | 79 | 1.1 | 33.78 | BA42 | TBS80A2 | - | 2363 |
| 82.9 | 79 | 1.1 | 33.78 | BA42 | TBS71C2 | - | 2366 |
| 81.8 | 83 | 2.4 | 17.11 | BA52 | TBS80B4 | - | 2546 |
| 81.5 | 81 | 1.9 | 35.10 | BA52 | TP/TBP80A2 | - | 2549 |
| 81.2 | 85 | 2.0 | 11.57 | BA52 | TH/TBH90S6 | - | 2552 |
| 81.2 | 85 | 2.0 | 11.57 | BA52 | TP/TBP90S6 | - | 2552 |
| 80.9 | 81 | 1.8 | 35.10 | BA52 | TH/TBH80A2 | - | 2555 |
| 80.1 | 82 | 1.8 | 35.10 | BA52 | TBS80A2 | - | 2564 |
| 79.8 | 82 | 1.8 | 35.10 | BA52 | TBS71C2 | - | 2567 |
| 79.5 | 86 | 1.9 | 11.57 | BA52 | TBS90S6 | - | 2570 |
| 79.5 | 86 | 1.9 | 11.57 | BA52 | TBS80C6 | - | 2570 |
| 73.9 | 93 | 4.0 | 12.44 | BA72 | TBS90S6 | 6671 | 3335 |
| 71.1 | 97 | 1.0 | 12.95 | BA42 | TBS80C6 | - | 2490 |
| 70.4 | 97 | 2.1 | 20.46 | BA52 | TP/TBP80B4 | - | 2677 |
| 70.0 | 94 | 3.2 | 40.87 | BA72 | TP/TBP80A2 | 6794 | 3397 |
| 69.9 | 97 | 2.1 | 20.46 | BA52 | TH/TBH80B4 | - | 2683 |
| 69.5 | 94 | 3.2 | 40.87 | BA72 | TH/TBH80A2 | 6810 | 3405 |
| 68.8 | 96 | 3.1 | 40.87 | BA72 | TBS80A2 | 6834 | 3417 |
| 68.4 | 99 | 2.0 | 20.46 | BA52 | TBS80B4 | - | 2702 |
| 68.1 | 96 | 1.6 | 41.97 | BA52 | TP/TBP80A2 | - | 2706 |
| 67.7 | 97 | 1.5 | 41.97 | BA52 | TH/TBH80A2 | - | 2712 |
| 67.0 | 98 | 1.5 | 41.97 | BA52 | TBS80A2 | - | 2722 |
| 66.7 | 98 | 1.5 | 41.97 | BA52 | TBS71C2 | - | 2725 |
| 65.2 | 95 | 3.5 | 43.89 | BA73 | TP/TBP80A2 | 6958 | 3479 |
| 64.7 | 96 | 3.5 | 43.89 | BA73 | TH/TBH80A2 | 6974 | 3487 |
| 64.3 | 107 | 1.6 | 14.63 | BA52 | TH/TBH90S6 | - | 2759 |
| 64.3 | 107 | 1.6 | 14.63 | BA52 | TP/TBP90S6 | - | 2759 |

# 5.1 B/BA MOTORIDUTTORE (50Hz)



## 0.75 kW

| n2 [rpm] | M2 [Nm] | fs | i | Riduttore | Motore | Fr2 D-S-P [N] | Fr2 C [N] |
|---|---|---|---|---|---|---|---|
| 64.0 | 97 | 3.5 | 43.89 | BA73 | TBS80A2 | 6999 | 3499 |
| 63.8 | 98 | 3.5 | 43.89 | BA73 | TBS71C2 | 7007 | 3504 |
| 62.9 | 109 | 1.5 | 14.63 | BA52 | TBS80C6 | - | 2779 |
| 62.9 | 109 | 1.5 | 14.63 | BA52 | TBS90S6 | - | 2779 |
| 62.7 | 109 | 1.1 | 22.97 | BA42 | TP/TBP80B4 | - | 2597 |
| 62.7 | 105 | 2.5 | 45.64 | BA72 | TP/TBP80A2 | 7049 | 3525 |
| 62.2 | 109 | 1.1 | 22.97 | BA42 | TH/TBH80B4 | - | 2603 |
| 62.2 | 106 | 2.5 | 45.64 | BA72 | TH/TBH80A2 | 7066 | 3533 |
| 61.7 | 111 | 4.0 | 14.91 | BA72 | TBS90S6 | 7085 | 3542 |
| 61.6 | 107 | 2.5 | 45.64 | BA72 | TBS80A2 | 7091 | 3545 |
| 60.9 | 112 | 1.1 | 22.97 | BA42 | TBS80B4 | - | 2621 |
| 57.5 | 118 | 1.7 | 25.03 | BA52 | TP/TBP80B4 | - | 2863 |
| 57.1 | 119 | 1.7 | 25.03 | BA52 | TH/TBH80B4 | - | 2870 |
| 55.9 | 123 | 1.0 | 16.47 | BA42 | TBS80C6 | - | 2698 |
| 55.9 | 122 | 1.6 | 25.03 | BA52 | TBS80B4 | - | 2890 |
| 55.7 | 118 | 1.4 | 51.34 | BA52 | TP/TBP80A2 | - | 2894 |
| 55.3 | 119 | 1.4 | 51.34 | BA52 | TH/TBH80A2 | - | 2901 |
| 55.1 | 113 | 4.0 | 50.81 | B063 | TBS71C2 | 12000 | 3754 |
| 54.9 | 125 | 1.7 | 17.11 | BA52 | TH/TBH90S6 | - | 2907 |
| 54.9 | 125 | 1.7 | 17.11 | BA52 | TP/TBP90S6 | - | 2907 |
| 54.7 | 120 | 1.4 | 51.34 | BA52 | TBS80A2 | - | 2911 |
| 54.5 | 120 | 1.4 | 51.34 | BA52 | TBS71C2 | - | 2914 |
| 54.1 | 115 | 2.9 | 52.83 | BA73 | TP/TBP80A2 | 7401 | 3701 |
| 53.8 | 128 | 1.6 | 17.11 | BA52 | TBS80C6 | - | 2928 |
| 53.8 | 128 | 1.6 | 17.11 | BA52 | TBS90S6 | - | 2928 |
| 53.8 | 116 | 2.9 | 52.83 | BA73 | TH/TBH80A2 | 7419 | 3709 |
| 53.2 | 117 | 2.9 | 52.83 | BA73 | TBS80A2 | 7445 | 3723 |
| 53.0 | 117 | 2.9 | 52.83 | BA73 | TBS71C2 | 7454 | 3727 |
| 52.5 | 130 | 3.2 | 27.45 | BA72 | TP/TBP80B4 | 7479 | 3740 |
| 52.4 | 131 | 3.4 | 17.94 | BA72 | TH/TBH90S6 | 7483 | 3741 |
| 52.4 | 131 | 3.4 | 17.94 | BA72 | TP/TBP90S6 | 7483 | 3741 |
| 52.1 | 131 | 3.2 | 27.45 | BA72 | TH/TBH80B4 | 7497 | 3748 |
| 52.1 | 126 | 2.1 | 54.94 | BA72 | TP/TBP80A2 | 7499 | 3749 |
| 51.7 | 127 | 2.1 | 54.94 | BA72 | TH/TBH80A2 | 7516 | 3758 |
| 51.4 | 132 | 0.9 | 28.00 | BA42 | TP/TBP80B4 | - | 2774 |
| 51.3 | 134 | 3.3 | 17.94 | BA72 | TBS90S6 | 7537 | 3768 |
| 51.1 | 133 | 0.9 | 28.00 | BA42 | TH/TBH80B4 | - | 2780 |
| 51.1 | 128 | 2.0 | 54.94 | BA72 | TBS80A2 | 7543 | 3771 |
| 51.0 | 133 | 3.1 | 27.45 | BA72 | TBS80B4 | 7550 | 3775 |
| 50.2 | 124 | 3.6 | 56.93 | B063 | TP/TBP80A2 | 12000 | 3861 |
| 49.9 | 125 | 3.6 | 56.93 | B063 | TH/TBH80A2 | 12000 | 3869 |

# 5.1 B/BA MOTORIDUTTORE (50Hz)



## 0.75 kW

| n2 [rpm] | M2 [Nm] | fs | i | Riduttore | Motore | Fr2 D-S-P [N] | Fr2 C [N] |
|---|---|---|---|---|---|---|---|
| 49.4 | 126 | 3.6 | 56.93 | B063 | TBS80A2 | 12000 | 3882 |
| 49.2 | 126 | 3.6 | 56.93 | B063 | TBS71C2 | 12000 | 3886 |
| 45.9 | 150 | 1.4 | 20.46 | BA52 | TH/TBH90S6 | - | 3086 |
| 45.9 | 150 | 1.4 | 20.46 | BA52 | TP/TBP90S6 | - | 3086 |
| 45.5 | 149 | 1.3 | 31.63 | BA52 | TP/TBP80B4 | - | 3095 |
| 45.2 | 151 | 1.3 | 31.63 | BA52 | TH/TBH80B4 | - | 3102 |
| 45.0 | 153 | 1.4 | 20.46 | BA52 | TBS80C6 | - | 3108 |
| 45.0 | 153 | 1.4 | 20.46 | BA52 | TBS90S6 | - | 3108 |
| 44.3 | 154 | 1.3 | 31.63 | BA52 | TBS80B4 | - | 3124 |
| 44.1 | 149 | 1.0 | 64.87 | BA52 | TP/TBP80A2 | - | 3129 |
| 43.8 | 150 | 1.0 | 64.87 | BA52 | TH/TBH80A2 | - | 3136 |
| 43.8 | 142 | 2.4 | 65.35 | BA73 | TP/TBP80A2 | 7945 | 3972 |
| 43.6 | 156 | 2.7 | 33.04 | BA72 | TP/TBP80B4 | 7956 | 3978 |
| 43.5 | 143 | 2.4 | 65.35 | BA73 | TH/TBH80A2 | 7964 | 3982 |
| 43.3 | 157 | 2.7 | 33.04 | BA72 | TH/TBH80B4 | 7975 | 3987 |
| 43.0 | 145 | 2.3 | 65.35 | BA73 | TBS80A2 | 7992 | 3996 |
| 42.8 | 151 | 4.0 | 33.43 | B063 | TH/TBH80B4 | 12000 | 4046 |
| 42.8 | 145 | 2.3 | 65.35 | BA73 | TBS71C2 | 8001 | 4001 |
| 42.4 | 162 | 2.7 | 22.19 | BA72 | TH/TBH90S6 | 8032 | 4016 |
| 42.4 | 162 | 2.7 | 22.19 | BA72 | TP/TBP90S6 | 8032 | 4016 |
| 42.4 | 161 | 2.6 | 33.04 | BA72 | TBS80B4 | 8031 | 4016 |
| 42.1 | 156 | 1.7 | 67.96 | BA72 | TP/TBP80A2 | 8049 | 4025 |
| 41.9 | 154 | 3.9 | 33.43 | B063 | TBS80B4 | 12000 | 4071 |
| 41.8 | 157 | 1.7 | 67.96 | BA72 | TH/TBH80A2 | 8068 | 4034 |
| 41.5 | 166 | 2.7 | 22.19 | BA72 | TBS90S6 | 8090 | 4045 |
| 41.4 | 150 | 3.0 | 69.16 | B063 | TP/TBP80A2 | 12000 | 4094 |
| 41.3 | 159 | 1.7 | 67.96 | BA72 | TBS80A2 | 8097 | 4048 |
| 41.1 | 151 | 3.0 | 69.16 | B063 | TH/TBH80A2 | 12000 | 4102 |
| 41.1 | 158 | 4.0 | 22.39 | B063 | TBS80C6 | 12000 | 4093 |
| 41.1 | 158 | 4.0 | 22.39 | B063 | TBS90S6 | 12000 | 4093 |
| 41.0 | 166 | 1.2 | 35.10 | BA52 | TP/TBP80B4 | - | 3204 |
| 40.7 | 167 | 1.2 | 35.10 | BA52 | TH/TBH80B4 | - | 3212 |
| 40.6 | 153 | 2.9 | 69.16 | B063 | TBS80A2 | 12000 | 4115 |
| 40.5 | 154 | 2.9 | 69.16 | B063 | TBS71C2 | 12000 | 4120 |
| 39.9 | 171 | 1.2 | 35.10 | BA52 | TBS80B4 | - | 3235 |
| 38.8 | 160 | 4.0 | 73.14 | B083 | TH/TBH80A2 | 18000 | 6443 |
| 38.8 | 160 | 1.0 | 73.70 | BA53 | TP/TBP80A2 | - | 3264 |
| 38.5 | 161 | 1.0 | 73.70 | BA53 | TH/TBH80A2 | - | 3272 |
| 38.4 | 162 | 3.9 | 73.14 | B083 | TBS80A2 | 18000 | 6464 |
| 38.1 | 163 | 1.0 | 73.70 | BA53 | TBS80A2 | - | 3284 |
| 38.0 | 164 | 1.0 | 73.70 | BA53 | TBS71C2 | - | 3288 |

# 5.1 B/BA MOTORIDUTTORE (50Hz)



## 0.75 kW

| n2 [rpm] | M2 [Nm] | fs | i | Riduttore | Motore | Fr2 D-S-P [N] | Fr2 C [N] |
|---|---|---|---|---|---|---|---|
| 37.6 | 183 | 1.1 | 25.03 | BA52 | TH/TBH90S6 | - | 3300 |
| 37.6 | 183 | 1.1 | 25.03 | BA52 | TP/TBP90S6 | - | 3300 |
| 37.3 | 173 | 3.5 | 38.58 | B063 | TP/TBP80B4 | 12000 | 4212 |
| 37.1 | 174 | 3.5 | 38.58 | B063 | TH/TBH80B4 | 12000 | 4221 |
| 36.9 | 169 | 2.7 | 77.48 | B063 | TP/TBP80A2 | 12000 | 4234 |
| 36.8 | 187 | 1.1 | 25.03 | BA52 | TBS80C6 | - | 3324 |
| 36.8 | 187 | 1.1 | 25.03 | BA52 | TBS90S6 | - | 3324 |
| 36.7 | 170 | 2.7 | 77.48 | B063 | TH/TBH80A2 | 12000 | 4243 |
| 36.3 | 178 | 3.4 | 38.58 | B063 | TBS80B4 | 12000 | 4247 |
| 36.3 | 172 | 2.6 | 77.48 | B063 | TBS80A2 | 12000 | 4256 |
| 36.1 | 172 | 2.6 | 77.48 | B063 | TBS71C2 | 12000 | 4261 |
| 36.0 | 181 | 3.5 | 26.09 | B063 | TH/TBH90S6 | 12000 | 4254 |
| 36.0 | 181 | 3.5 | 26.09 | B063 | TP/TBP90S6 | 12000 | 4254 |
| 35.4 | 176 | 3.6 | 80.76 | B083 | TP/TBP80A2 | 18000 | 6629 |
| 35.4 | 176 | 1.9 | 80.83 | BA73 | TP/TBP80A2 | 8528 | 4264 |
| 35.3 | 185 | 3.4 | 26.09 | B063 | TBS80C6 | 12000 | 4281 |
| 35.3 | 185 | 3.4 | 26.09 | B063 | TBS90S6 | 12000 | 4281 |
| 35.2 | 177 | 3.6 | 80.76 | B083 | TH/TBH80A2 | 18000 | 6644 |
| 35.2 | 193 | 2.1 | 40.87 | BA72 | TP/TBP80B4 | 8541 | 4270 |
| 35.1 | 177 | 1.9 | 80.83 | BA73 | TH/TBH80A2 | 8548 | 4274 |
| 35.0 | 194 | 2.1 | 40.87 | BA72 | TH/TBH80B4 | 8560 | 4280 |
| 34.8 | 179 | 3.6 | 80.76 | B083 | TBS80A2 | 18000 | 6666 |
| 34.8 | 179 | 1.9 | 80.83 | BA73 | TBS80A2 | 8579 | 4289 |
| 34.6 | 180 | 1.9 | 80.83 | BA73 | TBS71C2 | 8589 | 4294 |
| 34.3 | 198 | 1.0 | 41.97 | BA52 | TP/TBP80B4 | - | 3401 |
| 34.3 | 199 | 2.0 | 40.87 | BA72 | TBS80B4 | 8621 | 4311 |
| 34.2 | 201 | 2.2 | 27.45 | BA72 | TH/TBH90S6 | 8622 | 4311 |
| 34.2 | 201 | 2.2 | 27.45 | BA72 | TP/TBP90S6 | 8622 | 4311 |
| 34.1 | 200 | 1.0 | 41.97 | BA52 | TH/TBH80B4 | - | 3409 |
| 33.5 | 194 | 3.2 | 28.03 | B063 | TH/TBH90S6 | 12000 | 4344 |
| 33.5 | 194 | 3.2 | 28.03 | B063 | TP/TBP90S6 | 12000 | 4344 |
| 33.5 | 205 | 2.2 | 27.45 | BA72 | TBS80C6 | 8684 | 4342 |
| 33.5 | 205 | 2.2 | 27.45 | BA72 | TBS90S6 | 8684 | 4342 |
| 33.4 | 204 | 1.0 | 41.97 | BA52 | TBS80B4 | - | 3433 |
| 33.3 | 193 | 3.1 | 43.22 | B063 | TP/TBP80B4 | 12000 | 4355 |
| 33.1 | 195 | 3.1 | 43.22 | B063 | TH/TBH80B4 | 12000 | 4364 |
| 32.8 | 198 | 3.2 | 28.03 | B063 | TBS80C6 | 12000 | 4372 |
| 32.8 | 198 | 3.2 | 28.03 | B063 | TBS90S6 | 12000 | 4372 |
| 32.8 | 196 | 2.3 | 43.89 | BA73 | TP/TBP80B4 | 8746 | 4373 |
| 32.6 | 198 | 2.3 | 43.89 | BA73 | TH/TBH80B4 | 8766 | 4383 |
| 32.4 | 199 | 3.0 | 43.22 | B063 | TBS80B4 | 12000 | 4391 |

# 5.1 B/BA MOTORIDUTTORE (50Hz)



## 0.75 kW

| n2 [rpm] | M2 [Nm] | fs | i | Riduttore | Motore | Fr2 D-S-P [N] | Fr2 C [N] |
|---|---|---|---|---|---|---|---|
| 31.9 | 202 | 2.2 | 43.89 | BA73 | TBS80B4 | 8828 | 4414 |
| 31.7 | 196 | 2.3 | 90.33 | B063 | TP/TBP80A2 | 12000 | 4429 |
| 31.5 | 216 | 1.6 | 45.64 | BA72 | TP/TBP80B4 | 8861 | 4430 |
| 31.4 | 198 | 2.3 | 90.33 | B063 | TH/TBH80A2 | 12000 | 4438 |
| 31.3 | 217 | 1.6 | 45.64 | BA72 | TH/TBH80B4 | 8881 | 4441 |
| 31.1 | 200 | 2.3 | 90.33 | B063 | TBS80A2 | 12000 | 4452 |
| 31.0 | 201 | 2.2 | 90.33 | B063 | TBS71C2 | 12000 | 4457 |
| 31.0 | 201 | 3.2 | 92.19 | B083 | TP/TBP80A2 | 18000 | 6906 |
| 30.8 | 202 | 3.2 | 92.19 | B083 | TH/TBH80A2 | 18000 | 6920 |
| 30.7 | 222 | 1.6 | 45.64 | BA72 | TBS80B4 | 8944 | 4472 |
| 30.5 | 204 | 3.1 | 92.19 | B083 | TBS80A2 | 18000 | 6943 |
| 29.7 | 231 | 0.9 | 31.63 | BA52 | TH/TBH90S6 | - | 3568 |
| 29.7 | 231 | 0.9 | 31.63 | BA52 | TP/TBP90S6 | - | 3568 |
| 29.4 | 212 | 1.6 | 97.29 | BA73 | TP/TBP80A2 | 9072 | 4536 |
| 29.2 | 213 | 1.6 | 97.29 | BA73 | TH/TBH80A2 | 9093 | 4547 |
| 28.9 | 225 | 4.0 | 31.80 | B083 | TBS80C6 | 18000 | 7043 |
| 28.9 | 225 | 4.0 | 31.80 | B083 | TBS90S6 | 18000 | 7043 |
| 28.9 | 215 | 1.6 | 97.29 | BA73 | TBS80A2 | 9125 | 4563 |
| 28.8 | 216 | 1.6 | 97.29 | BA73 | TBS71C2 | 9136 | 4568 |
| 28.4 | 219 | 2.9 | 100.57 | B083 | TP/TBP80A2 | 18000 | 7092 |
| 28.4 | 242 | 1.8 | 33.04 | BA72 | TH/TBH90S6 | 9172 | 4586 |
| 28.4 | 242 | 1.8 | 33.04 | BA72 | TP/TBP90S6 | 9172 | 4586 |
| 28.3 | 227 | 2.6 | 50.81 | B063 | TP/TBP80B4 | 12000 | 4564 |
| 28.3 | 220 | 2.0 | 101.20 | B063 | TP/TBP80A2 | 12000 | 4578 |
| 28.2 | 220 | 2.9 | 100.57 | B083 | TH/TBH80A2 | 18000 | 7108 |
| 28.1 | 232 | 2.7 | 33.43 | B063 | TH/TBH90S6 | 12000 | 4571 |
| 28.1 | 232 | 2.7 | 33.43 | B063 | TP/TBP90S6 | 12000 | 4571 |
| 28.1 | 229 | 2.6 | 50.81 | B063 | TH/TBH80B4 | 12000 | 4573 |
| 28.1 | 222 | 2.0 | 101.20 | B063 | TH/TBH80A2 | 12000 | 4587 |
| 28.1 | 229 | 3.7 | 51.19 | B083 | TP/TBP80B4 | 18000 | 7107 |
| 28.0 | 243 | 0.9 | 51.34 | BA52 | TP/TBP80B4 | - | 3637 |
| 27.9 | 231 | 3.7 | 51.19 | B083 | TH/TBH80B4 | 18000 | 7122 |
| 27.9 | 223 | 2.9 | 100.57 | B083 | TBS80A2 | 18000 | 7131 |
| 27.9 | 244 | 0.9 | 51.34 | BA52 | TH/TBH80B4 | - | 3646 |
| 27.8 | 224 | 2.0 | 101.20 | B063 | TBS80A2 | 12000 | 4601 |
| 27.8 | 247 | 1.8 | 33.04 | BA72 | TBS80C6 | 9238 | 4619 |
| 27.8 | 247 | 1.8 | 33.04 | BA72 | TBS90S6 | 9238 | 4619 |
| 27.7 | 225 | 2.0 | 101.20 | B063 | TBS71C2 | 12000 | 4606 |
| 27.6 | 234 | 2.6 | 50.81 | B063 | TBS80B4 | 12000 | 4601 |
| 27.5 | 237 | 2.7 | 33.43 | B063 | TBS80C6 | 12000 | 4599 |
| 27.5 | 237 | 2.7 | 33.43 | B063 | TBS90S6 | 12000 | 4599 |

# 5.1 B/BA MOTORIDUTTORE (50Hz)



## 0.75 kW

| n2 [rpm] | M2 [Nm] | fs | i | Riduttore | Motore | Fr2 D-S-P [N] | Fr2 C [N] |
|---|---|---|---|---|---|---|---|
| 27.4 | 236 | 3.6 | 51.19 | B083 | TBS80B4 | 18000 | 7168 |
| 27.3 | 239 | 3.7 | 34.49 | B083 | TH/TBH90S6 | 18000 | 7173 |
| 27.3 | 239 | 3.7 | 34.49 | B083 | TP/TBP90S6 | 18000 | 7173 |
| 27.3 | 237 | 1.9 | 52.83 | BA73 | TP/TBP80B4 | 9304 | 4652 |
| 27.2 | 229 | 2.8 | 105.29 | B083 | TP/TBP80A2 | 18000 | 7192 |
| 27.1 | 238 | 1.9 | 52.83 | BA73 | TH/TBH80B4 | 9325 | 4663 |
| 27.0 | 231 | 2.8 | 105.29 | B083 | TH/TBH80A2 | 18000 | 7208 |
| 26.7 | 233 | 2.7 | 105.29 | B083 | TBS80A2 | 18000 | 7231 |
| 26.7 | 244 | 3.7 | 34.49 | B083 | TBS80C6 | 18000 | 7220 |
| 26.7 | 244 | 3.7 | 34.49 | B083 | TBS90S6 | 18000 | 7220 |
| 26.5 | 243 | 1.8 | 52.83 | BA73 | TBS80B4 | 9391 | 4696 |
| 26.2 | 260 | 1.3 | 54.94 | BA72 | TP/TBP80B4 | 9426 | 4713 |
| 26.0 | 261 | 1.3 | 54.94 | BA72 | TH/TBH80B4 | 9448 | 4724 |
| 25.9 | 249 | 3.4 | 55.52 | B083 | TP/TBP80B4 | 18000 | 7285 |
| 25.8 | 250 | 3.4 | 55.52 | B083 | TH/TBH80B4 | 18000 | 7300 |
| 25.6 | 243 | 1.9 | 111.74 | B063 | TP/TBP80A2 | 12000 | 4710 |
| 25.5 | 267 | 1.3 | 54.94 | BA72 | TBS80B4 | 9515 | 4757 |
| 25.4 | 245 | 1.8 | 111.74 | B063 | TH/TBH80A2 | 12000 | 4719 |
| 25.3 | 255 | 2.4 | 56.93 | B063 | TP/TBP80B4 | 12000 | 4714 |
| 25.2 | 256 | 3.3 | 55.52 | B083 | TBS80B4 | 18000 | 7347 |
| 25.1 | 257 | 2.3 | 56.93 | B063 | TH/TBH80B4 | 12000 | 4723 |
| 25.1 | 248 | 1.8 | 111.74 | B063 | TBS71C2 | 12000 | 4738 |
| 25.1 | 247 | 1.8 | 111.74 | B063 | TBS80A2 | 12000 | 4734 |
| 24.6 | 262 | 2.3 | 56.93 | B063 | TBS80B4 | 12000 | 4752 |
| 24.6 | 253 | 2.5 | 116.25 | B083 | TP/TBP80A2 | 18000 | 7413 |
| 24.4 | 267 | 2.4 | 38.58 | B063 | TH/TBH90S6 | 12000 | 4761 |
| 24.4 | 267 | 2.4 | 38.58 | B063 | TP/TBP90S6 | 12000 | 4761 |
| 24.4 | 255 | 2.5 | 116.25 | B083 | TH/TBH80A2 | 18000 | 7429 |
| 24.2 | 257 | 2.5 | 116.25 | B083 | TBS80A2 | 18000 | 7453 |
| 24.0 | 268 | 3.2 | 59.96 | B083 | TP/TBP80B4 | 18000 | 7456 |
| 23.9 | 270 | 3.1 | 59.96 | B083 | TH/TBH80B4 | 18000 | 7472 |
| 23.8 | 273 | 2.3 | 38.58 | B063 | TBS80C6 | 12000 | 4790 |
| 23.8 | 273 | 2.3 | 38.58 | B063 | TBS90S6 | 12000 | 4790 |
| 23.8 | 262 | 1.3 | 120.34 | BA73 | TP/TBP80A2 | 9738 | 4869 |
| 23.7 | 274 | 3.3 | 39.60 | B083 | TH/TBH90S6 | 18000 | 7479 |
| 23.7 | 274 | 3.3 | 39.60 | B083 | TP/TBP90S6 | 18000 | 7479 |
| 23.6 | 264 | 1.3 | 120.34 | BA73 | TH/TBH80A2 | 9761 | 4881 |
| 23.4 | 276 | 3.1 | 59.96 | B083 | TBS80B4 | 18000 | 7520 |
| 23.4 | 266 | 1.3 | 120.34 | BA73 | TBS80A2 | 9796 | 4898 |
| 23.3 | 267 | 1.3 | 120.34 | BA73 | TBS71C2 | 9807 | 4904 |
| 23.2 | 280 | 3.2 | 39.60 | B083 | TBS80C6 | 18000 | 7528 |

# 5.1 B/BA MOTORIDUTTORE (50Hz)



## 0.75 kW

| n2 [rpm] | M2 [Nm] | fs | i | Riduttore | Motore | Fr2 D-S-P [N] | Fr2 C [N] |
|---|---|---|---|---|---|---|---|
| 23.2 | 280 | 3.2 | 39.60 | B083 | TBS90S6 | 18000 | 7528 |
| 23.0 | 270 | 1.7 | 124.20 | B063 | TP/TBP80A2 | 12000 | 4853 |
| 23.0 | 299 | 1.4 | 40.87 | BA72 | TH/TBH90S6 | 9845 | 4923 |
| 23.0 | 299 | 1.4 | 40.87 | BA72 | TP/TBP90S6 | 9845 | 4923 |
| 22.9 | 272 | 1.7 | 124.20 | B063 | TH/TBH80A2 | 12000 | 4863 |
| 22.6 | 275 | 1.6 | 124.20 | B063 | TBS80A2 | 12000 | 4877 |
| 22.6 | 285 | 3.0 | 63.74 | B083 | TP/TBP80B4 | 18000 | 7595 |
| 22.6 | 276 | 2.3 | 126.76 | B083 | TP/TBP80A2 | 18000 | 7610 |
| 22.5 | 276 | 1.6 | 124.20 | B063 | TBS71C2 | 12000 | 4882 |
| 22.5 | 305 | 1.4 | 40.87 | BA72 | TBS80C6 | 9916 | 4958 |
| 22.5 | 305 | 1.4 | 40.87 | BA72 | TBS90S6 | 9916 | 4958 |
| 22.4 | 287 | 3.0 | 63.74 | B083 | TH/TBH80B4 | 18000 | 7611 |
| 22.4 | 278 | 2.3 | 126.76 | B083 | TH/TBH80A2 | 18000 | 7626 |
| 22.2 | 281 | 2.3 | 126.76 | B083 | TBS80A2 | 18000 | 7650 |
| 22.0 | 293 | 2.9 | 63.74 | B083 | TBS80B4 | 18000 | 7660 |
| 22.0 | 293 | 1.5 | 65.35 | BA73 | TP/TBP80B4 | 9987 | 4993 |
| 21.9 | 298 | 3.0 | 42.95 | B083 | TH/TBH90S6 | 18000 | 7664 |
| 21.9 | 298 | 3.0 | 42.95 | B083 | TP/TBP90S6 | 18000 | 7664 |
| 21.9 | 295 | 1.5 | 65.35 | BA73 | TH/TBH80B4 | 10000 | 5005 |
| 21.7 | 299 | 2.1 | 43.22 | B063 | TH/TBH90S6 | 12000 | 4914 |
| 21.7 | 299 | 2.1 | 43.22 | B063 | TP/TBP90S6 | 12000 | 4914 |
| 21.4 | 304 | 2.9 | 42.95 | B083 | TBS80C6 | 18000 | 7714 |
| 21.4 | 304 | 2.9 | 42.95 | B083 | TBS90S6 | 18000 | 7714 |
| 21.4 | 304 | 1.6 | 43.89 | BA73 | TH/TBH90S6 | 10000 | 5041 |
| 21.4 | 304 | 1.6 | 43.89 | BA73 | TP/TBP90S6 | 10000 | 5041 |
| 21.4 | 301 | 1.5 | 65.35 | BA73 | TBS80B4 | 10000 | 5041 |
| 21.3 | 306 | 2.1 | 43.22 | B063 | TBS80C6 | 12000 | 4944 |
| 21.3 | 306 | 2.1 | 43.22 | B063 | TBS90S6 | 12000 | 4944 |
| 21.2 | 321 | 1.1 | 67.96 | BA72 | TP/TBP80B4 | 10000 | 5059 |
| 21.0 | 323 | 1.1 | 67.96 | BA72 | TH/TBH80B4 | 10000 | 5071 |
| 21.0 | 311 | 1.5 | 43.89 | BA73 | TBS80C6 | 10000 | 5077 |
| 21.0 | 311 | 1.5 | 43.89 | BA73 | TBS90S6 | 10000 | 5077 |
| 20.8 | 310 | 1.9 | 69.16 | B063 | TP/TBP80B4 | 12000 | 4978 |
| 20.8 | 310 | 2.7 | 69.14 | B083 | TP/TBP80B4 | 18000 | 7783 |
| 20.7 | 312 | 1.9 | 69.16 | B063 | TH/TBH80B4 | 12000 | 4988 |
| 20.7 | 315 | 2.8 | 45.44 | B083 | TH/TBH90S6 | 18000 | 7795 |
| 20.7 | 315 | 2.8 | 45.44 | B083 | TP/TBP90S6 | 18000 | 7795 |
| 20.7 | 312 | 2.7 | 69.14 | B083 | TH/TBH80B4 | 18000 | 7799 |
| 20.6 | 303 | 1.5 | 139.15 | B063 | TP/TBP80A2 | 12000 | 5010 |
| 20.6 | 334 | 1.1 | 45.64 | BA72 | TH/TBH90S6 | 10000 | 5107 |
| 20.6 | 334 | 1.1 | 45.64 | BA72 | TP/TBP90S6 | 10000 | 5107 |

# 5.1 B/BA MOTORIDUTTORE (50Hz)



## 0.75 kW

| n2 [rpm] | M2 [Nm] | fs | i | Riduttore | Motore | Fr2 D-S-P [N] | Fr2 C [N] |
|---|---|---|---|---|---|---|---|
| 20.6 | 330 | 1.1 | 67.96 | BA72 | TBS80B4 | 10000 | 5107 |
| 20.4 | 305 | 1.5 | 139.15 | B063 | TH/TBH80A2 | 12000 | 5020 |
| 20.2 | 318 | 1.9 | 69.16 | B063 | TBS80B4 | 12000 | 5017 |
| 20.2 | 308 | 1.5 | 139.15 | B063 | TBS80A2 | 12000 | 5035 |
| 20.2 | 318 | 2.7 | 69.14 | B083 | TBS80B4 | 18000 | 7848 |
| 20.2 | 322 | 2.8 | 45.44 | B083 | TBS80C6 | 18000 | 7845 |
| 20.2 | 322 | 2.8 | 45.44 | B083 | TBS90S6 | 18000 | 7845 |
| 20.2 | 341 | 1.1 | 45.64 | BA72 | TBS80C6 | 10000 | 5144 |
| 20.2 | 341 | 1.1 | 45.64 | BA72 | TBS90S6 | 10000 | 5144 |
| 20.1 | 309 | 1.5 | 139.15 | B063 | TBS71C2 | 12000 | 5040 |
| 19.8 | 315 | 2.0 | 144.77 | B083 | TP/TBP80A2 | 18000 | 7919 |
| 19.7 | 327 | 2.6 | 73.14 | B083 | TP/TBP80B4 | 18000 | 7914 |
| 19.6 | 330 | 2.6 | 73.14 | B083 | TH/TBH80B4 | 18000 | 7931 |
| 19.6 | 317 | 2.0 | 144.77 | B083 | TH/TBH80A2 | 18000 | 7936 |
| 19.4 | 320 | 2.0 | 144.77 | B083 | TBS80A2 | 18000 | 7961 |
| 19.1 | 337 | 2.5 | 73.14 | B083 | TBS80B4 | 18000 | 7981 |
| 19.1 | 326 | 1.0 | 149.73 | BA73 | TP/TBP80A2 | 10000 | 5237 |
| 19.0 | 328 | 1.0 | 149.73 | BA73 | TH/TBH80A2 | 10000 | 5249 |
| 18.8 | 331 | 1.0 | 149.73 | BA73 | TBS80A2 | 10000 | 5268 |
| 18.7 | 333 | 1.0 | 149.73 | BA73 | TBS71C2 | 10000 | 5274 |
| 18.6 | 347 | 1.7 | 77.48 | B063 | TP/TBP80B4 | 12000 | 5135 |
| 18.5 | 352 | 1.8 | 50.81 | B063 | TH/TBH90S6 | 12000 | 5137 |
| 18.5 | 352 | 1.8 | 50.81 | B063 | TP/TBP90S6 | 12000 | 5137 |
| 18.5 | 349 | 1.7 | 77.48 | B063 | TH/TBH80B4 | 12000 | 5145 |
| 18.4 | 355 | 2.5 | 51.19 | B083 | TH/TBH90S6 | 18000 | 8076 |
| 18.4 | 355 | 2.5 | 51.19 | B083 | TP/TBP90S6 | 18000 | 8076 |
| 18.2 | 342 | 1.3 | 157.42 | B063 | TP/TBP80A2 | 12000 | 5183 |
| 18.1 | 360 | 1.8 | 50.81 | B063 | TBS80C6 | 12000 | 5167 |
| 18.1 | 360 | 1.8 | 50.81 | B063 | TBS90S6 | 12000 | 5167 |
| 18.1 | 357 | 1.7 | 77.48 | B063 | TBS80B4 | 12000 | 5175 |
| 18.0 | 345 | 1.3 | 157.42 | B063 | TH/TBH80A2 | 12000 | 5193 |
| 18.0 | 362 | 2.5 | 51.19 | B083 | TBS80C6 | 18000 | 8127 |
| 18.0 | 362 | 2.5 | 51.19 | B083 | TBS90S6 | 18000 | 8127 |
| 17.9 | 348 | 1.3 | 157.42 | B063 | TBS80A2 | 12000 | 5208 |
| 17.8 | 350 | 1.3 | 157.42 | B063 | TBS71C2 | 12000 | 5213 |
| 17.8 | 362 | 2.4 | 80.76 | B083 | TP/TBP80B4 | 18000 | 8151 |
| 17.8 | 366 | 1.3 | 52.83 | BA73 | TH/TBH90S6 | 10000 | 5362 |
| 17.8 | 366 | 1.3 | 52.83 | BA73 | TP/TBP90S6 | 10000 | 5362 |
| 17.8 | 362 | 1.2 | 80.83 | BA73 | TP/TBP80B4 | 10000 | 5360 |
| 17.7 | 364 | 2.3 | 80.76 | B083 | TH/TBH80B4 | 18000 | 8167 |
| 17.7 | 364 | 1.2 | 80.83 | BA73 | TH/TBH80B4 | 10000 | 5373 |

# 5.1 B/BA MOTORIDUTTORE (50Hz)



## 0.75 kW

| n2 [rpm] | M2 [Nm] | fs | i | Riduttore | Motore | Fr2 D-S-P [N] | Fr2 C [N] |
|---|---|---|---|---|---|---|---|
| 17.4 | 374 | 1.3 | 52.83 | BA73 | TBS80C6 | 10000 | 5401 |
| 17.4 | 374 | 1.3 | 52.83 | BA73 | TBS90S6 | 10000 | 5401 |
| 17.3 | 372 | 2.3 | 80.76 | B083 | TBS80B4 | 18000 | 8219 |
| 17.3 | 359 | 3.8 | 165.25 | B103 | TP/TBP80A2 | 22000 | 10176 |
| 17.3 | 372 | 1.2 | 80.83 | BA73 | TBS80B4 | 10000 | 5411 |
| 17.2 | 362 | 3.7 | 165.25 | B103 | TH/TBH80A2 | 22000 | 10198 |
| 17.1 | 402 | 0.9 | 54.94 | BA72 | TH/TBH90S6 | 10000 | 5433 |
| 17.1 | 402 | 0.9 | 54.94 | BA72 | TP/TBP90S6 | 10000 | 5433 |
| 17.0 | 366 | 3.7 | 165.25 | B103 | TBS80A2 | 22000 | 10232 |
| 16.9 | 385 | 2.3 | 55.52 | B083 | TH/TBH90S6 | 18000 | 8272 |
| 16.9 | 385 | 2.3 | 55.52 | B083 | TP/TBP90S6 | 18000 | 8272 |
| 16.6 | 393 | 2.3 | 55.52 | B083 | TBS80C6 | 18000 | 8324 |
| 16.6 | 393 | 2.3 | 55.52 | B083 | TBS90S6 | 18000 | 8324 |
| 16.5 | 394 | 1.6 | 56.93 | B063 | TH/TBH90S6 | 12000 | 5296 |
| 16.5 | 394 | 1.6 | 56.93 | B063 | TP/TBP90S6 | 12000 | 5296 |
| 16.2 | 403 | 1.6 | 56.93 | B063 | TBS80C6 | 12000 | 5327 |
| 16.2 | 403 | 1.6 | 56.93 | B063 | TBS90S6 | 12000 | 5327 |
| 15.9 | 404 | 1.5 | 90.33 | B063 | TP/TBP80B4 | 12000 | 5351 |
| 15.8 | 407 | 1.5 | 90.33 | B063 | TH/TBH80B4 | 12000 | 5361 |
| 15.7 | 415 | 2.1 | 59.96 | B083 | TH/TBH90S6 | 18000 | 8460 |
| 15.7 | 415 | 2.1 | 59.96 | B083 | TP/TBP90S6 | 18000 | 8460 |
| 15.6 | 413 | 2.1 | 92.19 | B083 | TP/TBP80B4 | 18000 | 8474 |
| 15.5 | 416 | 1.4 | 90.33 | B063 | TBS80B4 | 12000 | 5391 |
| 15.5 | 416 | 2.0 | 92.19 | B083 | TH/TBH80B4 | 18000 | 8491 |
| 15.3 | 424 | 2.1 | 59.96 | B083 | TBS80C6 | 18000 | 8513 |
| 15.3 | 424 | 2.1 | 59.96 | B083 | TBS90S6 | 18000 | 8513 |
| 15.2 | 424 | 2.0 | 92.19 | B083 | TBS80B4 | 18000 | 8544 |
| 14.8 | 436 | 1.0 | 97.29 | BA73 | TP/TBP80B4 | 10000 | 5500 |
| 14.7 | 441 | 2.0 | 63.74 | B083 | TH/TBH90S6 | 18000 | 8612 |
| 14.7 | 441 | 2.0 | 63.74 | B083 | TP/TBP90S6 | 18000 | 8612 |
| 14.7 | 439 | 1.0 | 97.29 | BA73 | TH/TBH80B4 | 10000 | 5500 |
| 14.5 | 449 | 4.0 | 64.89 | B103 | TH/TBH90S6 | 22000 | 10735 |
| 14.5 | 449 | 4.0 | 64.89 | B103 | TP/TBP90S6 | 22000 | 10735 |
| 14.4 | 451 | 2.0 | 63.74 | B083 | TBS80C6 | 18000 | 8666 |
| 14.4 | 451 | 2.0 | 63.74 | B083 | TBS90S6 | 18000 | 8666 |
| 14.4 | 453 | 1.0 | 65.35 | BA73 | TH/TBH90S6 | 10000 | 5500 |
| 14.4 | 453 | 1.0 | 65.35 | BA73 | TP/TBP90S6 | 10000 | 5500 |
| 14.4 | 448 | 1.0 | 97.29 | BA73 | TBS80B4 | 10000 | 5500 |
| 14.3 | 450 | 1.9 | 100.57 | B083 | TP/TBP80B4 | 18000 | 8691 |
| 14.2 | 453 | 1.3 | 101.20 | B063 | TP/TBP80B4 | 12000 | 5513 |
| 14.2 | 453 | 1.9 | 100.57 | B083 | TH/TBH80B4 | 18000 | 8709 |

# 5.1 B/BA MOTORIDUTTORE (50Hz)



## 0.75 kW

| n2 [rpm] | M2 [Nm] | fs | i | Riduttore | Motore | Fr2 D-S-P [N] | Fr2 C [N] |
|---|---|---|---|---|---|---|---|
| 14.2 | 459 | 3.9 | 64.89 | B103 | TBS80C6 | 22000 | 10806 |
| 14.2 | 459 | 3.9 | 64.89 | B103 | TBS90S6 | 22000 | 10806 |
| 14.1 | 456 | 1.3 | 101.20 | B063 | TH/TBH80B4 | 12000 | 5523 |
| 14.1 | 462 | 1.0 | 65.35 | BA73 | TBS80C6 | 10000 | 5500 |
| 14.1 | 462 | 1.0 | 65.35 | BA73 | TBS90S6 | 10000 | 5500 |
| 13.9 | 463 | 1.8 | 100.57 | B083 | TBS80B4 | 18000 | 8763 |
| 13.8 | 466 | 1.3 | 101.20 | B063 | TBS80B4 | 12000 | 5553 |
| 13.7 | 471 | 1.8 | 105.29 | B083 | TP/TBP80B4 | 18000 | 8807 |
| 13.7 | 475 | 3.8 | 68.58 | B103 | TH/TBH90S6 | 22000 | 10919 |
| 13.7 | 475 | 3.8 | 68.58 | B103 | TP/TBP90S6 | 22000 | 10919 |
| 13.7 | 472 | 3.8 | 105.44 | B103 | TP/TBP80B4 | 22000 | 10935 |
| 13.6 | 479 | 1.3 | 69.16 | B063 | TH/TBH90S6 | 12000 | 5572 |
| 13.6 | 479 | 1.3 | 69.16 | B063 | TP/TBP90S6 | 12000 | 5572 |
| 13.6 | 479 | 1.9 | 69.14 | B083 | TH/TBH90S6 | 18000 | 8817 |
| 13.6 | 479 | 1.9 | 69.14 | B083 | TP/TBP90S6 | 18000 | 8817 |
| 13.6 | 475 | 1.8 | 105.29 | B083 | TH/TBH80B4 | 18000 | 8825 |
| 13.6 | 475 | 3.8 | 105.44 | B103 | TH/TBH80B4 | 22000 | 10958 |
| 13.4 | 485 | 3.7 | 68.58 | B103 | TBS80C6 | 22000 | 10991 |
| 13.4 | 485 | 3.7 | 68.58 | B103 | TBS90S6 | 22000 | 10991 |
| 13.3 | 489 | 1.3 | 69.16 | B063 | TBS80C6 | 12000 | 5603 |
| 13.3 | 489 | 1.3 | 69.16 | B063 | TBS90S6 | 12000 | 5603 |
| 13.3 | 489 | 1.8 | 69.14 | B083 | TBS80C6 | 18000 | 8872 |
| 13.3 | 489 | 1.8 | 69.14 | B083 | TBS90S6 | 18000 | 8872 |
| 13.3 | 485 | 1.8 | 105.29 | B083 | TBS80B4 | 18000 | 8879 |
| 13.3 | 486 | 3.7 | 105.44 | B103 | TBS80B4 | 22000 | 11030 |
| 12.9 | 500 | 1.2 | 111.74 | B063 | TP/TBP80B4 | 12000 | 5655 |
| 12.9 | 507 | 1.8 | 73.14 | B083 | TH/TBH90S6 | 18000 | 8961 |
| 12.9 | 507 | 1.8 | 73.14 | B083 | TP/TBP90S6 | 18000 | 8961 |
| 12.9 | 504 | 3.5 | 72.76 | B103 | TH/TBH90S6 | 22000 | 11118 |
| 12.9 | 504 | 3.5 | 72.76 | B103 | TP/TBP90S6 | 22000 | 11118 |
| 12.8 | 504 | 1.2 | 111.74 | B063 | TH/TBH80B4 | 12000 | 5665 |
| 12.6 | 518 | 1.7 | 73.14 | B083 | TBS80C6 | 18000 | 9016 |
| 12.6 | 518 | 1.7 | 73.14 | B083 | TBS90S6 | 18000 | 9016 |
| 12.6 | 515 | 3.5 | 72.76 | B103 | TBS80C6 | 22000 | 11191 |
| 12.6 | 515 | 3.5 | 72.76 | B103 | TBS90S6 | 22000 | 11191 |
| 12.5 | 515 | 1.2 | 111.74 | B063 | TBS80B4 | 12000 | 5695 |
| 12.5 | 517 | 3.5 | 114.80 | B103 | TH/TBH80B4 | 22000 | 11246 |
| 12.5 | 514 | 3.5 | 114.80 | B103 | TP/TBP80B4 | 22000 | 11223 |
| 12.4 | 520 | 1.6 | 116.25 | B083 | TP/TBP80B4 | 18000 | 9062 |
| 12.3 | 524 | 1.6 | 116.25 | B083 | TH/TBH80B4 | 18000 | 9080 |
| 12.2 | 529 | 3.4 | 114.80 | B103 | TBS80B4 | 22000 | 11319 |

# 5.1 B/BA MOTORIDUTTORE (50Hz)



## 0.75 kW

| n2 [rpm] | M2 [Nm] | fs | i | Riduttore | Motore | Fr2 D-S-P [N] | Fr2 C [N] |
|---|---|---|---|---|---|---|---|
| 12.1 | 537 | 1.2 | 77.48 | B063 | TH/TBH90S6 | 12000 | 5734 |
| 12.1 | 537 | 1.2 | 77.48 | B063 | TP/TBP90S6 | 12000 | 5734 |
| 12.0 | 535 | 1.6 | 116.25 | B083 | TBS80B4 | 18000 | 9135 |
| 12.0 | 539 | 3.3 | 120.42 | B103 | TP/TBP80B4 | 22000 | 11387 |
| 11.9 | 548 | 1.1 | 77.48 | B063 | TBS80C6 | 12000 | 5765 |
| 11.9 | 548 | 1.1 | 77.48 | B063 | TBS90S6 | 12000 | 5765 |
| 11.9 | 547 | 3.3 | 78.92 | B103 | TH/TBH90S6 | 22000 | 11396 |
| 11.9 | 547 | 3.3 | 78.92 | B103 | TP/TBP90S6 | 22000 | 11396 |
| 11.9 | 543 | 3.3 | 120.42 | B103 | TH/TBH80B4 | 22000 | 11411 |
| 11.7 | 559 | 3.2 | 78.92 | B103 | TBS80C6 | 22000 | 11471 |
| 11.7 | 559 | 3.2 | 78.92 | B103 | TBS90S6 | 22000 | 11471 |
| 11.6 | 556 | 1.1 | 124.20 | B063 | TP/TBP80B4 | 12000 | 5806 |
| 11.6 | 559 | 1.6 | 80.76 | B083 | TH/TBH90S6 | 18000 | 9217 |
| 11.6 | 559 | 1.6 | 80.76 | B083 | TP/TBP90S6 | 18000 | 9217 |
| 11.6 | 554 | 3.2 | 120.42 | B103 | TBS80B4 | 22000 | 11485 |
| 11.5 | 560 | 1.1 | 124.20 | B063 | TH/TBH80B4 | 12000 | 5816 |
| 11.4 | 572 | 1.6 | 80.76 | B083 | TBS80C6 | 18000 | 9273 |
| 11.4 | 572 | 1.6 | 80.76 | B083 | TBS90S6 | 18000 | 9273 |
| 11.4 | 567 | 1.5 | 126.76 | B083 | TP/TBP80B4 | 18000 | 9287 |
| 11.3 | 572 | 1.0 | 124.20 | B063 | TBS80B4 | 12000 | 5847 |
| 11.3 | 571 | 1.5 | 126.76 | B083 | TH/TBH80B4 | 18000 | 9305 |
| 11.2 | 579 | 3.3 | 83.66 | B103 | TH/TBH90S6 | 22000 | 11599 |
| 11.2 | 579 | 3.3 | 83.66 | B103 | TP/TBP90S6 | 22000 | 11599 |
| 11.0 | 584 | 1.5 | 126.76 | B083 | TBS80B4 | 18000 | 9361 |
| 11.0 | 592 | 3.2 | 83.66 | B103 | TBS80C6 | 22000 | 11675 |
| 11.0 | 592 | 3.2 | 83.66 | B103 | TBS90S6 | 22000 | 11675 |
| 10.8 | 599 | 3.0 | 132.87 | B103 | TH/TBH80B4 | 22000 | 11756 |
| 10.8 | 595 | 3.0 | 132.87 | B103 | TP/TBP80B4 | 22000 | 11732 |
| 10.5 | 612 | 2.9 | 132.87 | B103 | TBS80B4 | 22000 | 11832 |
| 10.3 | 627 | 1.0 | 139.15 | B063 | TH/TBH80B4 | 12000 | 5979 |
| 10.3 | 623 | 1.0 | 139.15 | B063 | TP/TBP80B4 | 12000 | 5969 |
| 10.2 | 639 | 1.0 | 90.33 | B063 | TBS80C6 | 12000 | 5984 |
| 10.2 | 639 | 1.4 | 92.19 | B083 | TH/TBH90S6 | 18000 | 9566 |
| 10.2 | 639 | 1.4 | 92.19 | B083 | TP/TBP90S6 | 18000 | 9566 |
| 10.2 | 639 | 3.0 | 92.31 | B103 | TH/TBH90S6 | 22000 | 11949 |
| 10.2 | 639 | 3.0 | 92.31 | B103 | TP/TBP90S6 | 22000 | 11949 |
| 10.1 | 641 | 0.9 | 139.15 | B063 | TBS80B4 | 12000 | 6010 |
| 10.0 | 652 | 1.4 | 92.19 | B083 | TBS80C6 | 18000 | 9623 |
| 10.0 | 652 | 1.4 | 92.19 | B083 | TBS90S6 | 18000 | 9623 |
| 10.0 | 653 | 2.9 | 92.31 | B103 | TBS80C6 | 22000 | 12026 |
| 10.0 | 653 | 2.9 | 92.31 | B103 | TBS90S6 | 22000 | 12026 |

# 5.1 B/BA MOTORIDUTTORE (50Hz)



## 0.75 kW

| n2 [rpm] | M2 [Nm] | fs | i | Riduttore | Motore | Fr2 D-S-P [N] | Fr2 C [N] |
|---|---|---|---|---|---|---|---|
| 10.0 | 648 | 2.8 | 144.69 | B103 | TP/TBP80B4 | 22000 | 12037 |
| 9.9 | 653 | 1.3 | 144.77 | B083 | TH/TBH80B4 | 18000 | 9658 |
| 9.9 | 648 | 1.3 | 144.77 | B083 | TP/TBP80B4 | 18000 | 9639 |
| 9.9 | 652 | 2.8 | 144.69 | B103 | TH/TBH80B4 | 22000 | 12062 |
| 9.7 | 667 | 1.3 | 144.77 | B083 | TBS80B4 | 18000 | 9715 |
| 9.7 | 666 | 2.7 | 144.69 | B103 | TBS80B4 | 22000 | 12139 |
| 9.3 | 697 | 1.3 | 100.57 | B083 | TH/TBH90S6 | 18000 | 9799 |
| 9.3 | 697 | 1.3 | 100.57 | B083 | TP/TBP90S6 | 18000 | 9799 |
| 9.1 | 712 | 1.3 | 100.57 | B083 | TBS80C6 | 18000 | 9857 |
| 9.1 | 712 | 1.3 | 100.57 | B083 | TBS90S6 | 18000 | 9857 |
| 8.9 | 729 | 1.2 | 105.29 | B083 | TH/TBH90S6 | 18000 | 9923 |
| 8.9 | 729 | 1.2 | 105.29 | B083 | TP/TBP90S6 | 18000 | 9923 |
| 8.9 | 730 | 2.6 | 105.44 | B103 | TH/TBH90S6 | 22000 | 12434 |
| 8.9 | 730 | 2.6 | 105.44 | B103 | TP/TBP90S6 | 22000 | 12434 |
| 8.7 | 745 | 1.2 | 105.29 | B083 | TBS80C6 | 18000 | 9981 |
| 8.7 | 745 | 1.2 | 105.29 | B083 | TBS90S6 | 18000 | 9981 |
| 8.7 | 746 | 2.5 | 105.44 | B103 | TBS80C6 | 22000 | 12514 |
| 8.7 | 746 | 2.5 | 105.44 | B103 | TBS90S6 | 22000 | 12514 |
| 8.7 | 745 | 2.4 | 165.25 | B103 | TH/TBH80B4 | 22000 | 12550 |
| 8.7 | 740 | 2.4 | 165.25 | B103 | TP/TBP80B4 | 22000 | 12524 |
| 8.5 | 761 | 2.4 | 165.25 | B103 | TBS80B4 | 22000 | 12630 |
| 8.2 | 795 | 2.4 | 114.80 | B103 | TH/TBH90S6 | 22000 | 12751 |
| 8.2 | 795 | 2.4 | 114.80 | B103 | TP/TBP90S6 | 22000 | 12751 |
| 8.1 | 805 | 1.1 | 116.25 | B083 | TH/TBH90S6 | 18000 | 10193 |
| 8.1 | 805 | 1.1 | 116.25 | B083 | TP/TBP90S6 | 18000 | 10193 |
| 8.0 | 812 | 2.3 | 114.80 | B103 | TBS80C6 | 22000 | 12833 |
| 8.0 | 812 | 2.3 | 114.80 | B103 | TBS90S6 | 22000 | 12833 |
| 7.9 | 823 | 1.1 | 116.25 | B083 | TBS80C6 | 18000 | 10252 |
| 7.9 | 823 | 1.1 | 116.25 | B083 | TBS90S6 | 18000 | 10252 |
| 7.8 | 834 | 2.3 | 120.42 | B103 | TH/TBH90S6 | 22000 | 12933 |
| 7.8 | 834 | 2.3 | 120.42 | B103 | TP/TBP90S6 | 22000 | 12933 |
| 7.6 | 852 | 2.2 | 120.42 | B103 | TBS80C6 | 22000 | 13015 |
| 7.6 | 852 | 2.2 | 120.42 | B103 | TBS90S6 | 22000 | 13015 |
| 7.4 | 878 | 1.0 | 126.76 | B083 | TH/TBH90S6 | 18000 | 10431 |
| 7.4 | 878 | 1.0 | 126.76 | B083 | TP/TBP90S6 | 18000 | 10431 |
| 7.3 | 897 | 1.0 | 126.76 | B083 | TBS80C6 | 18000 | 10490 |
| 7.3 | 897 | 1.0 | 126.76 | B083 | TBS90S6 | 18000 | 10490 |
| 7.1 | 920 | 2.1 | 132.87 | B103 | TH/TBH90S6 | 22000 | 13311 |
| 7.1 | 920 | 2.1 | 132.87 | B103 | TP/TBP90S6 | 22000 | 13311 |
| 7.1 | 920 | 4.0 | 129.96 | B123 | TBS90S6 | 30000 | 18750 |
| 6.9 | 940 | 2.0 | 132.87 | B103 | TBS80C6 | 22000 | 13395 |

# 5.1 B/BA MOTORIDUTTORE (50Hz)



## 0.75 kW

| n2 [rpm] | M2 [Nm] | fs | i | Riduttore | Motore | Fr2 D-S-P [N] | Fr2 C [N] |
|---|---|---|---|---|---|---|---|
| 6.9 | 940 | 2.0 | 132.87 | B103 | TBS90S6 | 22000 | 13395 |
| 6.5 | 1002 | 1.9 | 144.69 | B103 | TH/TBH90S6 | 22000 | 13645 |
| 6.5 | 1002 | 1.9 | 144.69 | B103 | TP/TBP90S6 | 22000 | 13645 |
| 6.5 | 1000 | 3.7 | 144.43 | B123 | TH/TBH90S6 | 30000 | 19206 |
| 6.5 | 1000 | 3.7 | 144.43 | B123 | TP/TBP90S6 | 30000 | 19206 |
| 6.4 | 1024 | 1.8 | 144.69 | B103 | TBS80C6 | 22000 | 13730 |
| 6.4 | 1024 | 1.8 | 144.69 | B103 | TBS90S6 | 22000 | 13730 |
| 6.4 | 1022 | 3.6 | 144.43 | B123 | TBS90S6 | 30000 | 19323 |
| 5.9 | 1110 | 3.3 | 160.23 | B123 | TH/TBH90S6 | 30000 | 19777 |
| 5.9 | 1110 | 3.3 | 160.23 | B123 | TP/TBP90S6 | 30000 | 19777 |
| 5.7 | 1145 | 1.7 | 165.25 | B103 | TH/TBH90S6 | 22000 | 14177 |
| 5.7 | 1145 | 1.7 | 165.25 | B103 | TP/TBP90S6 | 22000 | 14177 |
| 5.7 | 1134 | 3.2 | 160.23 | B123 | TBS90S6 | 30000 | 19897 |
| 5.6 | 1169 | 1.6 | 165.25 | B103 | TBS80C6 | 22000 | 14264 |
| 5.6 | 1169 | 1.6 | 165.25 | B103 | TBS90S6 | 22000 | 14264 |
| 5.2 | 1250 | 2.9 | 180.40 | B123 | TH/TBH90S6 | 30000 | 20000 |
| 5.2 | 1250 | 2.9 | 180.40 | B123 | TP/TBP90S6 | 30000 | 20000 |
| 5.1 | 1277 | 2.9 | 180.40 | B123 | TBS90S6 | 30000 | 20000 |

## 0.92 kW

| n2 [rpm] | M2 [Nm] | fs | i | Riduttore | Motore | Fr2 D-S-P [N] | Fr2 C [N] |
|---|---|---|---|---|---|---|---|
| 183.8 | 45 | 2.0 | 7.62 | BA42 | TBS80C4 | - | 1814 |
| 176.9 | 47 | 3.4 | 7.91 | BA52 | TBS80C4 | - | 1969 |
| 148.0 | 56 | 2.8 | 9.46 | BA52 | TBS80C4 | - | 2090 |
| 131.8 | 63 | 1.4 | 10.62 | BA42 | TBS80C4 | - | 2027 |
| 121.0 | 69 | 2.3 | 11.57 | BA52 | TBS80C4 | - | 2235 |
| 108.1 | 77 | 1.2 | 12.95 | BA42 | TBS80C4 | - | 2165 |
| 96.8 | 86 | 1.0 | 14.46 | BA42 | TBS80C4 | - | 2246 |
| 95.7 | 87 | 1.8 | 14.63 | BA52 | TBS80C4 | - | 2416 |
| 85.0 | 98 | 1.2 | 16.47 | BA42 | TBS80C4 | - | 2346 |
| 81.8 | 102 | 2.0 | 17.11 | BA52 | TBS80C4 | - | 2546 |
| 68.4 | 122 | 1.6 | 20.46 | BA52 | TBS80C4 | - | 2702 |
| 55.9 | 149 | 1.3 | 25.03 | BA52 | TBS80C4 | - | 2890 |
| 51.0 | 164 | 2.6 | 27.45 | BA72 | TBS80C4 | 7550 | 3775 |
| 49.9 | 158 | 3.8 | 28.03 | B063 | TBS80C4 | 12000 | 3825 |
| 44.3 | 189 | 1.1 | 31.63 | BA52 | TBS80C4 | - | 3124 |
| 42.4 | 197 | 2.1 | 33.04 | BA72 | TBS80C4 | 8031 | 4016 |
| 41.9 | 189 | 3.2 | 33.43 | B063 | TBS80C4 | 12000 | 4026 |
| 39.9 | 209 | 1.0 | 35.10 | BA52 | TBS80C4 | - | 3235 |
| 36.3 | 218 | 2.8 | 38.58 | B063 | TBS80C4 | 12000 | 4195 |

# 5.1 B/BA MOTORIDUTTORE (50Hz)



## 0.92 kW

| n2 [rpm] | M2 [Nm] | fs | i | Riduttore | Motore | Fr2 D-S-P [N] | Fr2 C [N] |
|---|---|---|---|---|---|---|---|
| 35.4 | 224 | 3.8 | 39.60 | B083 | TBS80C4 | 18000 | 6577 |
| 34.3 | 244 | 1.6 | 40.87 | BA72 | TBS80C4 | 8621 | 4311 |
| 32.6 | 243 | 3.5 | 42.95 | B083 | TBS80C4 | 18000 | 6741 |
| 32.4 | 244 | 2.5 | 43.22 | B063 | TBS80C4 | 12000 | 4333 |
| 31.9 | 248 | 1.8 | 43.89 | BA73 | TBS80C4 | 8828 | 4414 |
| 30.8 | 257 | 3.3 | 45.44 | B083 | TBS80C4 | 18000 | 6857 |
| 30.7 | 272 | 1.3 | 45.64 | BA72 | TBS80C4 | 8944 | 4472 |
| 27.6 | 287 | 2.1 | 50.81 | B063 | TBS80C4 | 12000 | 4532 |
| 27.4 | 289 | 2.9 | 51.19 | B083 | TBS80C4 | 18000 | 7106 |
| 26.5 | 298 | 1.5 | 52.83 | BA73 | TBS80C4 | 9391 | 4696 |
| 25.5 | 328 | 1.1 | 54.94 | BA72 | TBS80C4 | 9515 | 4757 |
| 25.2 | 314 | 2.7 | 55.52 | B083 | TBS80C4 | 18000 | 7280 |
| 24.6 | 322 | 1.9 | 56.93 | B063 | TBS80C4 | 12000 | 4675 |
| 23.4 | 339 | 2.5 | 59.96 | B083 | TBS80C4 | 18000 | 7447 |
| 22.0 | 360 | 2.4 | 63.74 | B083 | TBS80C4 | 18000 | 7583 |
| 21.4 | 369 | 1.2 | 65.35 | BA73 | TBS80C4 | 10000 | 5041 |
| 20.2 | 391 | 1.5 | 69.16 | B063 | TBS80C4 | 12000 | 4924 |
| 20.2 | 391 | 2.2 | 69.14 | B083 | TBS80C4 | 18000 | 7765 |
| 19.1 | 413 | 2.1 | 73.14 | B083 | TBS80C4 | 18000 | 7893 |
| 18.1 | 438 | 1.4 | 77.48 | B063 | TBS80C4 | 12000 | 5071 |
| 17.7 | 446 | 3.8 | 78.92 | B103 | TBS80C4 | 22000 | 10020 |
| 17.3 | 456 | 1.9 | 80.76 | B083 | TBS80C4 | 18000 | 8121 |
| 17.3 | 457 | 1.0 | 80.83 | BA73 | TBS80C4 | 10000 | 5411 |
| 16.7 | 473 | 3.8 | 83.66 | B103 | TBS80C4 | 22000 | 10200 |
| 15.5 | 510 | 1.2 | 90.33 | B063 | TBS80C4 | 12000 | 5270 |
| 15.2 | 521 | 1.6 | 92.19 | B083 | TBS80C4 | 18000 | 8433 |
| 15.2 | 521 | 3.5 | 92.31 | B103 | TBS80C4 | 22000 | 10509 |
| 13.9 | 568 | 1.5 | 100.57 | B083 | TBS80C4 | 18000 | 8641 |
| 13.8 | 572 | 1.0 | 101.20 | B063 | TBS80C4 | 12000 | 5417 |
| 13.3 | 595 | 1.4 | 105.29 | B083 | TBS80C4 | 18000 | 8752 |
| 13.3 | 596 | 3.0 | 105.44 | B103 | TBS80C4 | 22000 | 10939 |
| 12.5 | 631 | 1.0 | 111.74 | B063 | TBS80C4 | 12000 | 5545 |
| 12.2 | 648 | 2.8 | 114.80 | B103 | TBS80C4 | 22000 | 11221 |
| 12.0 | 657 | 1.3 | 116.25 | B083 | TBS80C4 | 18000 | 8994 |
| 11.6 | 680 | 2.6 | 120.42 | B103 | TBS80C4 | 22000 | 11382 |
| 11.0 | 716 | 1.2 | 126.76 | B083 | TBS80C4 | 18000 | 9208 |
| 10.5 | 750 | 2.4 | 132.87 | B103 | TBS80C4 | 22000 | 11718 |
| 9.7 | 818 | 1.0 | 144.77 | B083 | TBS80C4 | 18000 | 9540 |
| 9.7 | 817 | 2.2 | 144.69 | B103 | TBS80C4 | 22000 | 12015 |
| 8.5 | 933 | 1.9 | 165.25 | B103 | TBS80C4 | 22000 | 12488 |

# 5.1 B/BA MOTORIDUTTORE (50Hz)



## 1.10 kW

| n2 [rpm] | M2 [Nm] | fs | i | Riduttore | Motore | Fr2 D-S-P [N] | Fr2 C [N] |
|---|---|---|---|---|---|---|---|
| 375.5 | 26 | 2.6 | 7.62 | BA42 | TP/TBP80B2 | - | 1430 |
| 372.9 | 26 | 2.6 | 7.62 | BA42 | TH/TBH80B2 | - | 1433 |
| 371.6 | 26 | 2.6 | 7.62 | BA42 | TBS80B2 | - | 1435 |
| 302.3 | 32 | 3.8 | 9.46 | BA52 | TP/TBP80B2 | - | 1647 |
| 300.2 | 32 | 3.7 | 9.46 | BA52 | TH/TBH80B2 | - | 1651 |
| 299.1 | 32 | 3.7 | 9.46 | BA52 | TBS80B2 | - | 1653 |
| 269.2 | 36 | 1.9 | 10.62 | BA42 | TP/TBP80B2 | - | 1598 |
| 267.3 | 36 | 1.9 | 10.62 | BA42 | TH/TBH80B2 | - | 1601 |
| 266.4 | 36 | 1.9 | 10.62 | BA42 | TBS80B2 | - | 1603 |
| 247.1 | 39 | 3.1 | 11.57 | BA52 | TP/TBP80B2 | - | 1761 |
| 245.4 | 39 | 3.1 | 11.57 | BA52 | TH/TBH80B2 | - | 1765 |
| 244.5 | 39 | 3.0 | 11.57 | BA52 | TBS80B2 | - | 1767 |
| 220.9 | 44 | 1.5 | 12.95 | BA42 | TP/TBP80B2 | - | 1706 |
| 219.3 | 44 | 1.5 | 12.95 | BA42 | TH/TBH80B2 | - | 1710 |
| 218.6 | 44 | 1.5 | 12.95 | BA42 | TBS80B2 | - | 1712 |
| 197.8 | 49 | 1.4 | 14.46 | BA42 | TP/TBP80B2 | - | 1770 |
| 196.4 | 49 | 1.4 | 14.46 | BA42 | TH/TBH80B2 | - | 1775 |
| 195.7 | 49 | 1.4 | 14.46 | BA42 | TBS80B2 | - | 1777 |
| 195.5 | 49 | 2.4 | 14.63 | BA52 | TP/TBP80B2 | - | 1904 |
| 194.2 | 50 | 2.4 | 14.63 | BA52 | TH/TBH80B2 | - | 1909 |
| 193.5 | 50 | 2.4 | 14.63 | BA52 | TBS80B2 | - | 1911 |
| 185.1 | 54 | 1.7 | 7.62 | BA42 | TBS80D4 | - | 1810 |
| 180.7 | 55 | 2.9 | 7.91 | BA52 | TH/TBH90S4 | - | 1955 |
| 180.7 | 55 | 2.9 | 7.91 | BA52 | TP/TBP90S4 | - | 1955 |
| 178.2 | 56 | 2.9 | 7.91 | BA52 | TBS80D4 | - | 1964 |
| 176.9 | 56 | 2.8 | 7.91 | BA52 | TBS90S4 | - | 1969 |
| 173.6 | 55 | 1.6 | 16.47 | BA42 | TP/TBP80B2 | - | 1849 |
| 172.4 | 56 | 1.6 | 16.47 | BA42 | TH/TBH80B2 | - | 1853 |
| 171.8 | 56 | 1.6 | 16.47 | BA42 | TBS80B2 | - | 1855 |
| 167.1 | 58 | 2.6 | 17.11 | BA52 | TP/TBP80B2 | - | 2006 |
| 166.0 | 58 | 2.6 | 17.11 | BA52 | TH/TBH80B2 | - | 2011 |
| 165.4 | 58 | 2.6 | 17.11 | BA52 | TBS80B2 | - | 2013 |
| 151.1 | 66 | 2.4 | 9.46 | BA52 | TH/TBH90S4 | - | 2075 |
| 151.1 | 66 | 2.4 | 9.46 | BA52 | TP/TBP90S4 | - | 2075 |
| 149.0 | 67 | 2.4 | 9.46 | BA52 | TBS80D4 | - | 2085 |
| 148.0 | 67 | 2.4 | 9.46 | BA52 | TBS90S4 | - | 2090 |
| 139.8 | 69 | 2.2 | 20.46 | BA52 | TP/TBP80B2 | - | 2130 |
| 138.8 | 69 | 2.2 | 20.46 | BA52 | TH/TBH80B2 | - | 2135 |
| 138.3 | 70 | 2.2 | 20.46 | BA52 | TBS80B2 | - | 2137 |
| 132.7 | 75 | 1.2 | 10.62 | BA42 | TBS80D4 | - | 2022 |
| 124.5 | 77 | 1.2 | 22.97 | BA42 | TP/TBP80B2 | - | 2066 |

# 5.1 B/BA MOTORIDUTTORE (50Hz)



## 1.10 kW

| n2 [rpm] | M2 [Nm] | fs | i | Riduttore | Motore | Fr2 D-S-P [N] | Fr2 C [N] |
|---|---|---|---|---|---|---|---|
| 123.6 | 78 | 1.2 | 22.97 | BA42 | TH/TBH80B2 | - | 2071 |
| 123.6 | 81 | 2.0 | 11.57 | BA52 | TH/TBH90S4 | - | 2219 |
| 123.6 | 81 | 2.0 | 11.57 | BA52 | TP/TBP90S4 | - | 2219 |
| 123.2 | 78 | 1.2 | 22.97 | BA42 | TBS80B2 | - | 2073 |
| 121.8 | 82 | 2.0 | 11.57 | BA52 | TBS80D4 | - | 2229 |
| 121.0 | 83 | 1.9 | 11.57 | BA52 | TBS90S4 | - | 2235 |
| 118.8 | 85 | 2.0 | 7.91 | BA52 | TH/TBH90L6 | - | 2248 |
| 117.5 | 86 | 2.0 | 7.91 | BA52 | TBS90L6 | - | 2256 |
| 114.3 | 84 | 1.8 | 25.03 | BA52 | TP/TBP80B2 | - | 2278 |
| 113.5 | 85 | 1.8 | 25.03 | BA52 | TH/TBH80B2 | - | 2283 |
| 113.1 | 85 | 1.8 | 25.03 | BA52 | TBS80B2 | - | 2286 |
| 112.5 | 89 | 3.9 | 12.44 | BA72 | TBS90S4 | 5800 | 2900 |
| 108.9 | 92 | 1.0 | 12.95 | BA42 | TBS80D4 | - | 2160 |
| 104.2 | 92 | 3.4 | 27.45 | BA72 | TP/TBP80B2 | 5950 | 2975 |
| 103.5 | 93 | 3.4 | 27.45 | BA72 | TH/TBH80B2 | 5964 | 2982 |
| 103.1 | 93 | 3.4 | 27.45 | BA72 | TBS80B2 | 5971 | 2986 |
| 99.3 | 101 | 1.7 | 9.46 | BA52 | TH/TBH90L6 | - | 2386 |
| 98.3 | 103 | 1.6 | 9.46 | BA52 | TBS90L6 | - | 2395 |
| 97.8 | 102 | 1.6 | 14.63 | BA52 | TH/TBH90S4 | - | 2399 |
| 97.8 | 102 | 1.6 | 14.63 | BA52 | TP/TBP90S4 | - | 2399 |
| 96.4 | 104 | 1.5 | 14.63 | BA52 | TBS80D4 | - | 2410 |
| 95.7 | 104 | 1.5 | 14.63 | BA52 | TBS90S4 | - | 2416 |
| 94.4 | 107 | 3.4 | 10.06 | BA72 | TP/TBP100LR6 | 6148 | 3074 |
| 93.9 | 106 | 4.0 | 14.91 | BA72 | TBS90S4 | 6160 | 3080 |
| 93.4 | 108 | 3.4 | 10.06 | BA72 | TH/TBH90L6 | 6170 | 3085 |
| 92.4 | 109 | 3.4 | 10.06 | BA72 | TBS90L6 | 6192 | 3096 |
| 90.4 | 107 | 1.4 | 31.63 | BA52 | TP/TBP80B2 | - | 2462 |
| 89.8 | 107 | 1.4 | 31.63 | BA52 | TH/TBH80B2 | - | 2468 |
| 89.5 | 108 | 1.4 | 31.63 | BA52 | TBS80B2 | - | 2471 |
| 86.6 | 111 | 2.8 | 33.04 | BA72 | TP/TBP80B2 | 6329 | 3165 |
| 86.0 | 112 | 2.8 | 33.04 | BA72 | TH/TBH80B2 | 6344 | 3172 |
| 85.6 | 117 | 1.0 | 16.47 | BA42 | TBS80D4 | - | 2341 |
| 85.6 | 112 | 2.8 | 33.04 | BA72 | TBS80B2 | 6352 | 3176 |
| 83.6 | 119 | 1.7 | 17.11 | BA52 | TH/TBH90S4 | - | 2528 |
| 83.6 | 119 | 1.7 | 17.11 | BA52 | TP/TBP90S4 | - | 2528 |
| 82.4 | 121 | 1.7 | 17.11 | BA52 | TBS80D4 | - | 2540 |
| 81.8 | 122 | 1.6 | 17.11 | BA52 | TBS90S4 | - | 2546 |
| 81.5 | 118 | 1.3 | 35.10 | BA52 | TP/TBP80B2 | - | 2549 |
| 81.2 | 124 | 1.4 | 11.57 | BA52 | TH/TBH90L6 | - | 2552 |
| 80.9 | 119 | 1.3 | 35.10 | BA52 | TH/TBH80B2 | - | 2555 |
| 80.6 | 119 | 1.3 | 35.10 | BA52 | TBS80B2 | - | 2558 |

# 5.1 B/BA MOTORIDUTTORE (50Hz)



## 1.10 kW

| n2 [rpm] | M2 [Nm] | fs | i | Riduttore | Motore | Fr2 D-S-P [N] | Fr2 C [N] |
|---|---|---|---|---|---|---|---|
| 80.4 | 125 | 1.3 | 11.57 | BA52 | TBS90L6 | - | 2561 |
| 79.7 | 125 | 3.4 | 17.94 | BA72 | TH/TBH90S4 | 6506 | 3253 |
| 79.7 | 125 | 3.4 | 17.94 | BA72 | TP/TBP90S4 | 6506 | 3253 |
| 78.0 | 128 | 3.3 | 17.94 | BA72 | TBS90S4 | 6552 | 3276 |
| 76.3 | 132 | 2.8 | 12.44 | BA72 | TP/TBP100LR6 | 6600 | 3300 |
| 75.5 | 133 | 2.8 | 12.44 | BA72 | TH/TBH90L6 | 6623 | 3312 |
| 74.7 | 135 | 2.7 | 12.44 | BA72 | TBS90L6 | 6647 | 3323 |
| 74.1 | 123 | 3.7 | 38.58 | B063 | TP/TBP80B2 | 11822 | 3378 |
| 73.6 | 124 | 3.6 | 38.58 | B063 | TH/TBH80B2 | 11847 | 3385 |
| 73.4 | 124 | 3.6 | 38.58 | B063 | TBS80B2 | 11859 | 3388 |
| 70.0 | 138 | 2.2 | 40.87 | BA72 | TP/TBP80B2 | 6794 | 3397 |
| 69.9 | 143 | 1.4 | 20.46 | BA52 | TH/TBH90S4 | - | 2683 |
| 69.9 | 143 | 1.4 | 20.46 | BA52 | TP/TBP90S4 | - | 2683 |
| 69.5 | 139 | 2.2 | 40.87 | BA72 | TH/TBH80B2 | 6810 | 3405 |
| 69.2 | 139 | 2.2 | 40.87 | BA72 | TBS80B2 | 6818 | 3409 |
| 68.9 | 145 | 1.4 | 20.46 | BA52 | TBS80D4 | - | 2696 |
| 68.4 | 146 | 1.4 | 20.46 | BA52 | TBS90S4 | - | 2702 |
| 68.1 | 141 | 1.1 | 41.97 | BA52 | TP/TBP80B2 | - | 2706 |
| 67.7 | 142 | 1.1 | 41.97 | BA52 | TH/TBH80B2 | - | 2712 |
| 67.4 | 143 | 1.1 | 41.97 | BA52 | TBS80B2 | - | 2715 |
| 66.2 | 138 | 3.3 | 43.22 | B063 | TP/TBP80B2 | 12000 | 3494 |
| 65.7 | 139 | 3.2 | 43.22 | B063 | TH/TBH80B2 | 12000 | 3501 |
| 65.5 | 139 | 3.2 | 43.22 | B063 | TBS80B2 | 12000 | 3505 |
| 65.2 | 140 | 2.4 | 43.89 | BA73 | TP/TBP80B2 | 6958 | 3479 |
| 64.7 | 141 | 2.4 | 43.89 | BA73 | TH/TBH80B2 | 6974 | 3487 |
| 64.5 | 141 | 2.4 | 43.89 | BA73 | TBS80B2 | 6982 | 3491 |
| 64.4 | 155 | 2.7 | 22.19 | BA72 | TH/TBH90S4 | 6984 | 3492 |
| 64.4 | 155 | 2.7 | 22.19 | BA72 | TP/TBP90S4 | 6984 | 3492 |
| 64.3 | 157 | 1.1 | 14.63 | BA52 | TH/TBH90L6 | - | 2759 |
| 63.7 | 158 | 2.8 | 14.91 | BA72 | TP/TBP100LR6 | 7009 | 3505 |
| 63.6 | 159 | 1.1 | 14.63 | BA52 | TBS90L6 | - | 2769 |
| 63.1 | 160 | 2.8 | 14.91 | BA72 | TH/TBH90L6 | 7034 | 3517 |
| 63.1 | 158 | 2.7 | 22.19 | BA72 | TBS90S4 | 7033 | 3517 |
| 63.0 | 150 | 4.0 | 22.39 | B063 | TBS80D4 | 12000 | 3539 |
| 62.7 | 154 | 1.7 | 45.64 | BA72 | TP/TBP80B2 | 7049 | 3525 |
| 62.5 | 151 | 4.0 | 22.39 | B063 | TBS90S4 | 12000 | 3546 |
| 62.4 | 162 | 2.7 | 14.91 | BA72 | TBS90L6 | 7059 | 3530 |
| 62.2 | 155 | 1.7 | 45.64 | BA72 | TH/TBH80B2 | 7066 | 3533 |
| 62.0 | 155 | 1.7 | 45.64 | BA72 | TBS80B2 | 7074 | 3537 |
| 61.3 | 156 | 4.0 | 15.18 | B063 | TBS90L6 | 12000 | 3565 |
| 57.1 | 175 | 1.1 | 25.03 | BA52 | TH/TBH90S4 | - | 2870 |

# 5.1 B/BA MOTORIDUTTORE (50Hz)



## 1.10 kW

| n2 [rpm] | M2 [Nm] | fs | i | Riduttore | Motore | Fr2 D-S-P [N] | Fr2 C [N] |
|---|---|---|---|---|---|---|---|
| 57.1 | 175 | 1.1 | 25.03 | BA52 | TP/TBP90S4 | - | 2870 |
| 56.3 | 162 | 2.8 | 50.81 | B063 | TP/TBP80B2 | 12000 | 3664 |
| 56.3 | 177 | 1.1 | 25.03 | BA52 | TBS80D4 | - | 2883 |
| 55.9 | 163 | 2.8 | 50.81 | B063 | TH/TBH80B2 | 12000 | 3671 |
| 55.9 | 171 | 3.7 | 17.00 | B063 | TP/TBP100LR6 | 12000 | 3662 |
| 55.9 | 163 | 3.9 | 51.19 | B083 | TP/TBP80B2 | 18000 | 5689 |
| 55.9 | 178 | 1.1 | 25.03 | BA52 | TBS90S4 | - | 2890 |
| 55.7 | 164 | 2.7 | 50.81 | B063 | TBS80B2 | 12000 | 3675 |
| 55.5 | 164 | 3.9 | 51.19 | B083 | TH/TBH80B2 | 18000 | 5701 |
| 55.3 | 173 | 3.6 | 17.00 | B063 | TH/TBH90L6 | 12000 | 3673 |
| 55.3 | 165 | 3.9 | 51.19 | B083 | TBS80B2 | 18000 | 5707 |
| 54.9 | 183 | 1.1 | 17.11 | BA52 | TH/TBH90L6 | - | 2907 |
| 54.8 | 172 | 3.5 | 26.09 | B063 | TH/TBH90S4 | 12000 | 3685 |
| 54.8 | 172 | 3.5 | 26.09 | B063 | TP/TBP90S4 | 12000 | 3685 |
| 54.7 | 175 | 3.6 | 17.00 | B063 | TBS90L6 | 12000 | 3685 |
| 54.4 | 185 | 1.1 | 17.11 | BA52 | TBS90L6 | - | 2918 |
| 54.1 | 169 | 2.0 | 52.83 | BA73 | TP/TBP80B2 | 7401 | 3701 |
| 54.0 | 175 | 3.4 | 26.09 | B063 | TBS80D4 | 12000 | 3700 |
| 53.8 | 170 | 2.0 | 52.83 | BA73 | TH/TBH80B2 | 7419 | 3709 |
| 53.7 | 176 | 3.4 | 26.09 | B063 | TBS90S4 | 12000 | 3707 |
| 53.6 | 170 | 2.0 | 52.83 | BA73 | TBS80B2 | 7427 | 3714 |
| 52.9 | 190 | 2.3 | 17.94 | BA72 | TP/TBP100LR6 | 7456 | 3728 |
| 52.4 | 192 | 2.3 | 17.94 | BA72 | TH/TBH90L6 | 7483 | 3741 |
| 52.1 | 192 | 2.2 | 27.45 | BA72 | TH/TBH90S4 | 7497 | 3748 |
| 52.1 | 192 | 2.2 | 27.45 | BA72 | TP/TBP90S4 | 7497 | 3748 |
| 52.1 | 185 | 1.4 | 54.94 | BA72 | TP/TBP80B2 | 7499 | 3749 |
| 51.8 | 194 | 2.3 | 17.94 | BA72 | TBS90L6 | 7509 | 3755 |
| 51.7 | 186 | 1.4 | 54.94 | BA72 | TH/TBH80B2 | 7516 | 3758 |
| 51.5 | 177 | 3.6 | 55.52 | B083 | TP/TBP80B2 | 18000 | 5833 |
| 51.5 | 187 | 1.4 | 54.94 | BA72 | TBS80B2 | 7525 | 3762 |
| 51.4 | 194 | 2.2 | 27.45 | BA72 | TBS80D4 | 7532 | 3766 |
| 51.1 | 178 | 3.6 | 55.52 | B083 | TH/TBH80B2 | 18000 | 5845 |
| 51.0 | 185 | 3.2 | 28.03 | B063 | TH/TBH90S4 | 12000 | 3762 |
| 51.0 | 185 | 3.2 | 28.03 | B063 | TP/TBP90S4 | 12000 | 3762 |
| 51.0 | 179 | 3.6 | 55.52 | B083 | TBS80B2 | 18000 | 5852 |
| 51.0 | 196 | 2.1 | 27.45 | BA72 | TBS90S4 | 7550 | 3775 |
| 50.3 | 188 | 3.2 | 28.03 | B063 | TBS80D4 | 12000 | 3777 |
| 50.2 | 182 | 2.5 | 56.93 | B063 | TP/TBP80B2 | 12000 | 3787 |
| 49.9 | 183 | 2.5 | 56.93 | B063 | TH/TBH80B2 | 12000 | 3794 |
| 49.9 | 189 | 3.2 | 28.03 | B063 | TBS90S4 | 12000 | 3785 |
| 49.7 | 184 | 2.5 | 56.93 | B063 | TBS80B2 | 12000 | 3798 |

# 5.1 B/BA MOTORIDUTTORE (50Hz)



## 1.10 kW

| n2 [rpm] | M2 [Nm] | fs | i | Riduttore | Motore | Fr2 D-S-P [N] | Fr2 C [N] |
|---|---|---|---|---|---|---|---|
| 47.7 | 191 | 3.3 | 59.96 | B083 | TP/TBP80B2 | 18000 | 5972 |
| 47.4 | 193 | 3.3 | 59.96 | B083 | TH/TBH80B2 | 18000 | 5984 |
| 47.2 | 193 | 3.3 | 59.96 | B083 | TBS80B2 | 18000 | 5991 |
| 45.9 | 219 | 1.0 | 20.46 | BA52 | TH/TBH90L6 | - | 3086 |
| 45.5 | 222 | 0.9 | 20.46 | BA52 | TBS90L6 | - | 3097 |
| 45.2 | 221 | 0.9 | 31.63 | BA52 | TH/TBH90S4 | - | 3102 |
| 45.2 | 221 | 0.9 | 31.63 | BA52 | TP/TBP90S4 | - | 3102 |
| 44.9 | 203 | 3.1 | 63.74 | B083 | TP/TBP80B2 | 18000 | 6084 |
| 44.6 | 205 | 3.1 | 63.74 | B083 | TH/TBH80B2 | 18000 | 6097 |
| 44.4 | 205 | 3.1 | 63.74 | B083 | TBS80B2 | 18000 | 6103 |
| 44.3 | 213 | 4.0 | 31.80 | B083 | TBS80D4 | 18000 | 6097 |
| 44.0 | 215 | 4.0 | 31.80 | B083 | TBS90S4 | 18000 | 6110 |
| 43.8 | 208 | 1.6 | 65.35 | BA73 | TP/TBP80B2 | 7945 | 3972 |
| 43.5 | 210 | 1.6 | 65.35 | BA73 | TH/TBH80B2 | 7964 | 3982 |
| 43.3 | 231 | 1.8 | 33.04 | BA72 | TH/TBH90S4 | 7975 | 3987 |
| 43.3 | 231 | 1.8 | 33.04 | BA72 | TP/TBP90S4 | 7975 | 3987 |
| 43.3 | 211 | 1.6 | 65.35 | BA73 | TBS80B2 | 7973 | 3986 |
| 42.8 | 221 | 2.7 | 33.43 | B063 | TH/TBH90S4 | 12000 | 3955 |
| 42.8 | 221 | 2.7 | 33.43 | B063 | TP/TBP90S4 | 12000 | 3955 |
| 42.8 | 235 | 1.9 | 22.19 | BA72 | TP/TBP100LR6 | 8004 | 4002 |
| 42.7 | 234 | 1.8 | 33.04 | BA72 | TBS80D4 | 8012 | 4006 |
| 42.4 | 225 | 2.8 | 22.39 | B063 | TP/TBP100LR6 | 12000 | 3961 |
| 42.4 | 238 | 1.9 | 22.19 | BA72 | TH/TBH90L6 | 8032 | 4016 |
| 42.4 | 236 | 1.8 | 33.04 | BA72 | TBS90S4 | 8031 | 4016 |
| 42.2 | 224 | 2.7 | 33.43 | B063 | TBS80D4 | 12000 | 3971 |
| 42.1 | 229 | 1.1 | 67.96 | BA72 | TP/TBP80B2 | 8049 | 4025 |
| 42.0 | 227 | 2.8 | 22.39 | B063 | TH/TBH90L6 | 12000 | 3973 |
| 41.9 | 226 | 2.7 | 33.43 | B063 | TBS90S4 | 12000 | 3979 |
| 41.9 | 241 | 1.8 | 22.19 | BA72 | TBS90L6 | 8061 | 4030 |
| 41.8 | 230 | 1.1 | 67.96 | BA72 | TH/TBH80B2 | 8068 | 4034 |
| 41.6 | 229 | 3.9 | 22.82 | B083 | TP/TBP100LR6 | 18000 | 6212 |
| 41.6 | 231 | 1.1 | 67.96 | BA72 | TBS80B2 | 8078 | 4039 |
| 41.5 | 230 | 2.7 | 22.39 | B063 | TBS90L6 | 12000 | 3985 |
| 41.5 | 228 | 3.7 | 34.49 | B083 | TH/TBH90S4 | 18000 | 6222 |
| 41.5 | 228 | 3.7 | 34.49 | B083 | TP/TBP90S4 | 18000 | 6222 |
| 41.4 | 221 | 2.0 | 69.16 | B063 | TP/TBP80B2 | 12000 | 4003 |
| 41.4 | 221 | 2.9 | 69.14 | B083 | TP/TBP80B2 | 18000 | 6236 |
| 41.2 | 232 | 3.9 | 22.82 | B083 | TH/TBH90L6 | 18000 | 6232 |
| 41.1 | 222 | 2.0 | 69.16 | B063 | TH/TBH80B2 | 12000 | 4011 |
| 41.1 | 222 | 2.9 | 69.14 | B083 | TH/TBH80B2 | 18000 | 6249 |
| 40.9 | 223 | 2.0 | 69.16 | B063 | TBS80B2 | 12000 | 4015 |

# 5.1 B/BA MOTORIDUTTORE (50Hz)



## 1.10 kW

| n2 [rpm] | M2 [Nm] | fs | i | Riduttore | Motore | Fr2 D-S-P [N] | Fr2 C [N] |
|---|---|---|---|---|---|---|---|
| 40.9 | 223 | 2.9 | 69.14 | B083 | TBS80B2 | 18000 | 6256 |
| 40.9 | 231 | 3.7 | 34.49 | B083 | TBS80D4 | 18000 | 6249 |
| 40.8 | 234 | 3.8 | 22.82 | B083 | TBS90L6 | 18000 | 6252 |
| 40.6 | 233 | 3.6 | 34.49 | B083 | TBS90S4 | 18000 | 6262 |
| 39.1 | 233 | 2.7 | 73.14 | B083 | TP/TBP80B2 | 18000 | 6343 |
| 38.8 | 235 | 2.7 | 73.14 | B083 | TH/TBH80B2 | 18000 | 6356 |
| 38.7 | 236 | 2.7 | 73.14 | B083 | TBS80B2 | 18000 | 6363 |
| 37.1 | 255 | 2.4 | 38.58 | B063 | TH/TBH90S4 | 12000 | 4116 |
| 37.1 | 255 | 2.4 | 38.58 | B063 | TP/TBP90S4 | 12000 | 4116 |
| 36.9 | 247 | 1.8 | 77.48 | B063 | TP/TBP80B2 | 12000 | 4133 |
| 36.7 | 249 | 1.8 | 77.48 | B063 | TH/TBH80B2 | 12000 | 4141 |
| 36.6 | 259 | 2.3 | 38.58 | B063 | TBS80D4 | 12000 | 4132 |
| 36.5 | 250 | 1.8 | 77.48 | B063 | TBS80B2 | 12000 | 4145 |
| 36.4 | 262 | 2.4 | 26.09 | B063 | TP/TBP100LR6 | 12000 | 4133 |
| 36.3 | 261 | 2.3 | 38.58 | B063 | TBS90S4 | 12000 | 4141 |
| 36.1 | 262 | 3.2 | 39.60 | B083 | TH/TBH90S4 | 18000 | 6486 |
| 36.1 | 262 | 3.2 | 39.60 | B083 | TP/TBP90S4 | 18000 | 6486 |
| 36.0 | 265 | 2.4 | 26.09 | B063 | TH/TBH90L6 | 12000 | 4145 |
| 35.6 | 268 | 2.4 | 26.09 | B063 | TBS90L6 | 12000 | 4158 |
| 35.6 | 266 | 3.2 | 39.60 | B083 | TBS80D4 | 18000 | 6513 |
| 35.6 | 269 | 3.3 | 26.71 | B083 | TP/TBP100LR6 | 18000 | 6512 |
| 35.4 | 267 | 3.2 | 39.60 | B083 | TBS90S4 | 18000 | 6527 |
| 35.4 | 258 | 2.5 | 80.76 | B083 | TP/TBP80B2 | 18000 | 6535 |
| 35.4 | 258 | 1.3 | 80.83 | BA73 | TP/TBP80B2 | 8528 | 4264 |
| 35.2 | 259 | 2.5 | 80.76 | B083 | TH/TBH80B2 | 18000 | 6548 |
| 35.2 | 271 | 3.3 | 26.71 | B083 | TH/TBH90L6 | 18000 | 6533 |
| 35.1 | 260 | 1.3 | 80.83 | BA73 | TH/TBH80B2 | 8548 | 4274 |
| 35.0 | 260 | 2.4 | 80.76 | B083 | TBS80B2 | 18000 | 6555 |
| 35.0 | 285 | 1.4 | 40.87 | BA72 | TH/TBH90S4 | 8560 | 4280 |
| 35.0 | 285 | 1.4 | 40.87 | BA72 | TP/TBP90S4 | 8560 | 4280 |
| 35.0 | 261 | 1.3 | 80.83 | BA73 | TBS80B2 | 8558 | 4279 |
| 34.8 | 274 | 3.3 | 26.71 | B083 | TBS90L6 | 18000 | 6554 |
| 34.6 | 291 | 1.5 | 27.45 | BA72 | TP/TBP100LR6 | 8592 | 4296 |
| 34.5 | 289 | 1.4 | 40.87 | BA72 | TBS80D4 | 8601 | 4300 |
| 34.3 | 291 | 1.4 | 40.87 | BA72 | TBS90S4 | 8621 | 4311 |
| 34.2 | 294 | 1.5 | 27.45 | BA72 | TH/TBH90L6 | 8622 | 4311 |
| 33.9 | 282 | 2.2 | 28.03 | B063 | TP/TBP100LR6 | 12000 | 4215 |
| 33.9 | 298 | 1.5 | 27.45 | BA72 | TBS90L6 | 8653 | 4326 |
| 33.5 | 285 | 2.2 | 28.03 | B063 | TH/TBH90L6 | 12000 | 4228 |
| 33.3 | 284 | 3.0 | 42.95 | B083 | TH/TBH90S4 | 18000 | 6645 |
| 33.3 | 284 | 3.0 | 42.95 | B083 | TP/TBP90S4 | 18000 | 6645 |

# 5.1 B/BA MOTORIDUTTORE (50Hz)



## 1.10 kW

| n2 [rpm] | M2 [Nm] | fs | i | Riduttore | Motore | Fr2 D-S-P [N] | Fr2 C [N] |
|---|---|---|---|---|---|---|---|
| 33.2 | 288 | 2.2 | 28.03 | B063 | TBS90L6 | 12000 | 4240 |
| 33.1 | 286 | 2.1 | 43.22 | B063 | TH/TBH90S4 | 12000 | 4247 |
| 33.1 | 286 | 2.1 | 43.22 | B063 | TP/TBP90S4 | 12000 | 4247 |
| 32.8 | 288 | 3.0 | 42.95 | B083 | TBS80D4 | 18000 | 6673 |
| 32.6 | 290 | 2.1 | 43.22 | B063 | TBS80D4 | 12000 | 4263 |
| 32.6 | 290 | 2.9 | 42.95 | B083 | TBS90S4 | 18000 | 6687 |
| 32.6 | 290 | 1.6 | 43.89 | BA73 | TH/TBH90S4 | 8766 | 4383 |
| 32.6 | 290 | 1.6 | 43.89 | BA73 | TP/TBP90S4 | 8766 | 4383 |
| 32.4 | 292 | 2.1 | 43.22 | B063 | TBS90S4 | 12000 | 4271 |
| 32.2 | 296 | 3.0 | 29.50 | B083 | TP/TBP100LR6 | 18000 | 6707 |
| 32.1 | 294 | 1.5 | 43.89 | BA73 | TBS80D4 | 8808 | 4404 |
| 31.9 | 300 | 3.0 | 29.50 | B083 | TH/TBH90L6 | 18000 | 6728 |
| 31.9 | 296 | 1.5 | 43.89 | BA73 | TBS90S4 | 8828 | 4414 |
| 31.7 | 288 | 1.6 | 90.33 | B063 | TP/TBP80B2 | 12000 | 4311 |
| 31.5 | 300 | 2.8 | 45.44 | B083 | TH/TBH90S4 | 18000 | 6756 |
| 31.5 | 300 | 2.8 | 45.44 | B083 | TP/TBP90S4 | 18000 | 6756 |
| 31.5 | 303 | 2.9 | 29.50 | B083 | TBS90L6 | 18000 | 6749 |
| 31.4 | 290 | 1.6 | 90.33 | B063 | TH/TBH80B2 | 12000 | 4319 |
| 31.3 | 291 | 1.5 | 90.33 | B063 | TBS80B2 | 12000 | 4323 |
| 31.3 | 319 | 1.1 | 45.64 | BA72 | TH/TBH90S4 | 8881 | 4441 |
| 31.3 | 319 | 1.1 | 45.64 | BA72 | TP/TBP90S4 | 8881 | 4441 |
| 31.0 | 294 | 2.2 | 92.19 | B083 | TP/TBP80B2 | 18000 | 6797 |
| 31.0 | 305 | 2.8 | 45.44 | B083 | TBS80D4 | 18000 | 6784 |
| 30.9 | 323 | 1.1 | 45.64 | BA72 | TBS80D4 | 8923 | 4462 |
| 30.8 | 307 | 2.8 | 45.44 | B083 | TBS90S4 | 18000 | 6799 |
| 30.8 | 296 | 2.2 | 92.19 | B083 | TH/TBH80B2 | 18000 | 6812 |
| 30.7 | 297 | 2.1 | 92.19 | B083 | TBS80B2 | 18000 | 6819 |
| 30.7 | 325 | 1.1 | 45.64 | BA72 | TBS90S4 | 8944 | 4472 |
| 29.9 | 320 | 2.8 | 31.80 | B083 | TP/TBP100LR6 | 18000 | 6857 |
| 29.6 | 323 | 2.8 | 31.80 | B083 | TH/TBH90L6 | 18000 | 6878 |
| 29.4 | 310 | 1.1 | 97.29 | BA73 | TP/TBP80B2 | 9072 | 4536 |
| 29.2 | 326 | 2.7 | 31.80 | B083 | TBS90L6 | 18000 | 6900 |
| 29.2 | 313 | 1.1 | 97.29 | BA73 | TH/TBH80B2 | 9093 | 4547 |
| 29.1 | 314 | 1.1 | 97.29 | BA73 | TBS80B2 | 9104 | 4552 |
| 28.8 | 351 | 1.3 | 33.04 | BA72 | TP/TBP100LR6 | 9139 | 4570 |
| 28.4 | 336 | 1.9 | 33.43 | B063 | TP/TBP100LR6 | 12000 | 4419 |
| 28.4 | 321 | 2.0 | 100.57 | B083 | TP/TBP80B2 | 18000 | 6974 |
| 28.4 | 354 | 1.2 | 33.04 | BA72 | TH/TBH90L6 | 9172 | 4586 |
| 28.3 | 323 | 1.4 | 101.20 | B063 | TP/TBP80B2 | 12000 | 4445 |
| 28.2 | 323 | 2.0 | 100.57 | B083 | TH/TBH80B2 | 18000 | 6989 |
| 28.1 | 340 | 1.9 | 33.43 | B063 | TH/TBH90L6 | 12000 | 4432 |

# 5.1 B/BA MOTORIDUTTORE (50Hz)



## 1.10 kW

| n2 [rpm] | M2 [Nm] | fs | i | Riduttore | Motore | Fr2 D-S-P [N] | Fr2 C [N] |
|---|---|---|---|---|---|---|---|
| 28.1 | 336 | 1.8 | 50.81 | B063 | TH/TBH90S4 | 12000 | 4435 |
| 28.1 | 336 | 1.8 | 50.81 | B063 | TP/TBP90S4 | 12000 | 4435 |
| 28.1 | 325 | 1.4 | 101.20 | B063 | TH/TBH80B2 | 12000 | 4454 |
| 28.1 | 324 | 2.0 | 100.57 | B083 | TBS80B2 | 18000 | 6996 |
| 28.1 | 358 | 1.2 | 33.04 | BA72 | TBS90L6 | 9204 | 4602 |
| 28.0 | 326 | 1.4 | 101.20 | B063 | TBS80B2 | 12000 | 4458 |
| 27.9 | 338 | 2.5 | 51.19 | B083 | TH/TBH90S4 | 18000 | 6997 |
| 27.9 | 338 | 2.5 | 51.19 | B083 | TP/TBP90S4 | 18000 | 6997 |
| 27.8 | 343 | 1.8 | 33.43 | B063 | TBS90L6 | 12000 | 4444 |
| 27.8 | 341 | 1.8 | 50.81 | B063 | TBS80D4 | 12000 | 4452 |
| 27.6 | 343 | 1.7 | 50.81 | B063 | TBS90S4 | 12000 | 4460 |
| 27.5 | 347 | 2.6 | 34.49 | B083 | TP/TBP100LR6 | 18000 | 7022 |
| 27.5 | 343 | 2.5 | 51.19 | B083 | TBS80D4 | 18000 | 7026 |
| 27.4 | 346 | 2.5 | 51.19 | B083 | TBS90S4 | 18000 | 7041 |
| 27.3 | 350 | 2.5 | 34.49 | B083 | TH/TBH90L6 | 18000 | 7044 |
| 27.2 | 336 | 1.9 | 105.29 | B083 | TP/TBP80B2 | 18000 | 7069 |
| 27.1 | 349 | 1.3 | 52.83 | BA73 | TH/TBH90S4 | 9325 | 4663 |
| 27.1 | 349 | 1.3 | 52.83 | BA73 | TP/TBP90S4 | 9325 | 4663 |
| 27.0 | 338 | 1.9 | 105.29 | B083 | TH/TBH80B2 | 18000 | 7083 |
| 27.0 | 354 | 2.5 | 34.49 | B083 | TBS90L6 | 18000 | 7066 |
| 26.9 | 339 | 1.9 | 105.29 | B083 | TBS80B2 | 18000 | 7091 |
| 26.9 | 339 | 4.0 | 105.44 | B103 | TH/TBH80B2 | 22000 | 8771 |
| 26.8 | 340 | 4.0 | 105.44 | B103 | TBS80B2 | 22000 | 8781 |
| 26.7 | 354 | 1.3 | 52.83 | BA73 | TBS80D4 | 9369 | 4685 |
| 26.5 | 357 | 1.3 | 52.83 | BA73 | TBS90S4 | 9391 | 4696 |
| 26.0 | 383 | 0.9 | 54.94 | BA72 | TH/TBH90S4 | 9448 | 4724 |
| 26.0 | 383 | 0.9 | 54.94 | BA72 | TP/TBP90S4 | 9448 | 4724 |
| 25.8 | 367 | 2.3 | 55.52 | B083 | TH/TBH90S4 | 18000 | 7165 |
| 25.8 | 367 | 2.3 | 55.52 | B083 | TP/TBP90S4 | 18000 | 7165 |
| 25.7 | 389 | 0.9 | 54.94 | BA72 | TBS80D4 | 9492 | 4746 |
| 25.6 | 356 | 1.3 | 111.74 | B063 | TP/TBP80B2 | 12000 | 4564 |
| 25.4 | 359 | 1.3 | 111.74 | B063 | TH/TBH80B2 | 12000 | 4572 |
| 25.4 | 372 | 2.3 | 55.52 | B083 | TBS80D4 | 18000 | 7194 |
| 25.3 | 360 | 1.2 | 111.74 | B063 | TBS80B2 | 12000 | 4576 |
| 25.2 | 375 | 2.3 | 55.52 | B083 | TBS90S4 | 18000 | 7209 |
| 25.1 | 376 | 1.6 | 56.93 | B063 | TH/TBH90S4 | 12000 | 4569 |
| 25.1 | 376 | 1.6 | 56.93 | B063 | TP/TBP90S4 | 12000 | 4569 |
| 24.9 | 366 | 3.7 | 114.80 | B103 | TP/TBP80B2 | 22000 | 8984 |
| 24.8 | 382 | 1.6 | 56.93 | B063 | TBS80D4 | 12000 | 4586 |
| 24.7 | 369 | 3.7 | 114.80 | B103 | TH/TBH80B2 | 22000 | 9004 |
| 24.7 | 370 | 3.6 | 114.80 | B103 | TBS80B2 | 22000 | 9013 |

# 5.1 B/BA MOTORIDUTTORE (50Hz)



## 1.10 kW

| n2 [rpm] | M2 [Nm] | fs | i | Riduttore | Motore | Fr2 D-S-P [N] | Fr2 C [N] |
|---|---|---|---|---|---|---|---|
| 24.6 | 388 | 1.6 | 38.58 | B063 | TP/TBP100LR6 | 12000 | 4588 |
| 24.6 | 384 | 1.6 | 56.93 | B063 | TBS90S4 | 12000 | 4594 |
| 24.6 | 371 | 1.7 | 116.25 | B083 | TP/TBP80B2 | 18000 | 7276 |
| 24.4 | 392 | 1.6 | 38.58 | B063 | TH/TBH90L6 | 12000 | 4600 |
| 24.4 | 373 | 1.7 | 116.25 | B083 | TH/TBH80B2 | 18000 | 7291 |
| 24.3 | 375 | 1.7 | 116.25 | B083 | TBS80B2 | 18000 | 7299 |
| 24.1 | 396 | 1.6 | 38.58 | B063 | TBS90L6 | 12000 | 4613 |
| 24.0 | 398 | 2.2 | 39.60 | B083 | TP/TBP100LR6 | 18000 | 7309 |
| 23.9 | 396 | 2.1 | 59.96 | B083 | TH/TBH90S4 | 18000 | 7326 |
| 23.9 | 396 | 2.1 | 59.96 | B083 | TP/TBP90S4 | 18000 | 7326 |
| 23.7 | 402 | 2.2 | 39.60 | B083 | TH/TBH90L6 | 18000 | 7331 |
| 23.7 | 384 | 3.5 | 120.42 | B103 | TP/TBP80B2 | 22000 | 9117 |
| 23.6 | 387 | 3.5 | 120.42 | B103 | TH/TBH80B2 | 22000 | 9137 |
| 23.5 | 407 | 2.2 | 39.60 | B083 | TBS90L6 | 18000 | 7354 |
| 23.5 | 402 | 2.1 | 59.96 | B083 | TBS80D4 | 18000 | 7356 |
| 23.5 | 388 | 3.5 | 120.42 | B103 | TBS80B2 | 22000 | 9147 |
| 23.4 | 405 | 2.1 | 59.96 | B083 | TBS90S4 | 18000 | 7371 |
| 23.2 | 434 | 1.0 | 40.87 | BA72 | TP/TBP100LR6 | 9811 | 4905 |
| 23.0 | 396 | 1.1 | 124.20 | B063 | TP/TBP80B2 | 12000 | 4691 |
| 23.0 | 438 | 1.0 | 40.87 | BA72 | TH/TBH90L6 | 9845 | 4923 |
| 22.9 | 399 | 1.1 | 124.20 | B063 | TH/TBH80B2 | 12000 | 4699 |
| 22.8 | 400 | 1.1 | 124.20 | B063 | TBS80B2 | 12000 | 4703 |
| 22.8 | 443 | 0.9 | 40.87 | BA72 | TBS90L6 | 9880 | 4940 |
| 22.6 | 404 | 1.6 | 126.76 | B083 | TP/TBP80B2 | 18000 | 7461 |
| 22.4 | 421 | 2.0 | 63.74 | B083 | TH/TBH90S4 | 18000 | 7456 |
| 22.4 | 421 | 2.0 | 63.74 | B083 | TP/TBP90S4 | 18000 | 7456 |
| 22.4 | 407 | 1.6 | 126.76 | B083 | TH/TBH80B2 | 18000 | 7476 |
| 22.3 | 409 | 1.6 | 126.76 | B083 | TBS80B2 | 18000 | 7483 |
| 22.1 | 427 | 2.0 | 63.74 | B083 | TBS80D4 | 18000 | 7486 |
| 22.1 | 432 | 2.1 | 42.95 | B083 | TP/TBP100LR6 | 18000 | 7481 |
| 22.0 | 434 | 1.5 | 43.22 | B063 | TP/TBP100LR6 | 12000 | 4722 |
| 22.0 | 430 | 2.0 | 63.74 | B083 | TBS90S4 | 18000 | 7501 |
| 22.0 | 429 | 4.0 | 64.89 | B103 | TH/TBH90S4 | 22000 | 9316 |
| 22.0 | 429 | 4.0 | 64.89 | B103 | TP/TBP90S4 | 22000 | 9316 |
| 21.9 | 436 | 2.0 | 42.95 | B083 | TH/TBH90L6 | 18000 | 7504 |
| 21.9 | 432 | 1.0 | 65.35 | BA73 | TH/TBH90S4 | 10000 | 5005 |
| 21.9 | 432 | 1.0 | 65.35 | BA73 | TP/TBP90S4 | 10000 | 5005 |
| 21.7 | 439 | 1.4 | 43.22 | B063 | TH/TBH90L6 | 12000 | 4734 |
| 21.7 | 441 | 2.0 | 42.95 | B083 | TBS90L6 | 18000 | 7527 |
| 21.7 | 435 | 3.9 | 64.89 | B103 | TBS80D4 | 22000 | 9356 |
| 21.6 | 438 | 3.9 | 64.89 | B103 | TBS90S4 | 22000 | 9376 |

# 5.1 B/BA MOTORIDUTTORE (50Hz)



## 1.10 kW

| n2 [rpm] | M2 [Nm] | fs | i | Riduttore | Motore | Fr2 D-S-P [N] | Fr2 C [N] |
|---|---|---|---|---|---|---|---|
| 21.6 | 438 | 1.0 | 65.35 | BA73 | TBS80D4 | 10000 | 5029 |
| 21.5 | 444 | 1.4 | 43.22 | B063 | TBS90L6 | 12000 | 4747 |
| 21.5 | 424 | 3.2 | 132.87 | B103 | TP/TBP80B2 | 22000 | 9396 |
| 21.4 | 427 | 3.2 | 132.87 | B103 | TH/TBH80B2 | 22000 | 9416 |
| 21.4 | 446 | 1.1 | 43.89 | BA73 | TH/TBH90L6 | 10000 | 5041 |
| 21.4 | 441 | 1.0 | 65.35 | BA73 | TBS90S4 | 10000 | 5041 |
| 21.3 | 448 | 4.0 | 44.61 | B103 | TP/TBP100LR6 | 22000 | 9410 |
| 21.3 | 428 | 3.2 | 132.87 | B103 | TBS80B2 | 22000 | 9426 |
| 21.2 | 451 | 1.0 | 43.89 | BA73 | TBS90L6 | 10000 | 5059 |
| 21.1 | 453 | 3.9 | 44.61 | B103 | TH/TBH90L6 | 22000 | 9440 |
| 20.9 | 457 | 2.0 | 45.44 | B083 | TP/TBP100LR6 | 18000 | 7602 |
| 20.9 | 453 | 3.7 | 68.58 | B103 | TH/TBH90S4 | 22000 | 9474 |
| 20.9 | 453 | 3.7 | 68.58 | B103 | TP/TBP90S4 | 22000 | 9474 |
| 20.8 | 458 | 3.9 | 44.61 | B103 | TBS90L6 | 22000 | 9471 |
| 20.7 | 457 | 1.3 | 69.16 | B063 | TH/TBH90S4 | 12000 | 4800 |
| 20.7 | 457 | 1.3 | 69.16 | B063 | TP/TBP90S4 | 12000 | 4800 |
| 20.7 | 457 | 1.9 | 69.14 | B083 | TH/TBH90S4 | 18000 | 7631 |
| 20.7 | 457 | 1.9 | 69.14 | B083 | TP/TBP90S4 | 18000 | 7631 |
| 20.7 | 462 | 1.9 | 45.44 | B083 | TH/TBH90L6 | 18000 | 7625 |
| 20.6 | 444 | 1.0 | 139.15 | B063 | TP/TBP80B2 | 12000 | 4828 |
| 20.6 | 460 | 3.7 | 68.58 | B103 | TBS80D4 | 22000 | 9515 |
| 20.5 | 467 | 1.9 | 45.44 | B083 | TBS90L6 | 18000 | 7648 |
| 20.4 | 464 | 1.3 | 69.16 | B063 | TBS80D4 | 12000 | 4817 |
| 20.4 | 447 | 1.0 | 139.15 | B063 | TH/TBH80B2 | 12000 | 4836 |
| 20.4 | 464 | 1.8 | 69.14 | B083 | TBS80D4 | 18000 | 7661 |
| 20.4 | 463 | 3.7 | 68.58 | B103 | TBS90S4 | 22000 | 9535 |
| 20.3 | 449 | 1.0 | 139.15 | B063 | TBS80B2 | 12000 | 4841 |
| 20.2 | 467 | 1.3 | 69.16 | B063 | TBS90S4 | 12000 | 4825 |
| 20.2 | 467 | 1.8 | 69.14 | B083 | TBS90S4 | 18000 | 7677 |
| 20.1 | 475 | 3.8 | 47.28 | B103 | TP/TBP100LR6 | 22000 | 9578 |
| 19.9 | 480 | 3.7 | 47.28 | B103 | TH/TBH90L6 | 22000 | 9609 |
| 19.8 | 462 | 1.4 | 144.77 | B083 | TP/TBP80B2 | 18000 | 7750 |
| 19.8 | 462 | 2.9 | 144.69 | B103 | TP/TBP80B2 | 22000 | 9643 |
| 19.7 | 486 | 3.7 | 47.28 | B103 | TBS90L6 | 22000 | 9640 |
| 19.7 | 481 | 3.5 | 72.76 | B103 | TH/TBH90S4 | 22000 | 9646 |
| 19.7 | 481 | 3.5 | 72.76 | B103 | TP/TBP90S4 | 22000 | 9646 |
| 19.6 | 484 | 1.8 | 73.14 | B083 | TH/TBH90S4 | 18000 | 7753 |
| 19.6 | 484 | 1.8 | 73.14 | B083 | TP/TBP90S4 | 18000 | 7753 |
| 19.6 | 465 | 1.4 | 144.77 | B083 | TH/TBH80B2 | 18000 | 7765 |
| 19.6 | 465 | 2.9 | 144.69 | B103 | TH/TBH80B2 | 22000 | 9663 |
| 19.6 | 466 | 2.9 | 144.69 | B103 | TBS80B2 | 22000 | 9674 |

# 5.1 B/BA MOTORIDUTTORE (50Hz)



## 1.10 kW

| n2 [rpm] | M2 [Nm] | fs | i | Riduttore | Motore | Fr2 D-S-P [N] | Fr2 C [N] |
|---|---|---|---|---|---|---|---|
| 19.5 | 467 | 1.4 | 144.77 | B083 | TBS80B2 | 18000 | 7773 |
| 19.4 | 488 | 3.5 | 72.76 | B103 | TBS80D4 | 22000 | 9687 |
| 19.3 | 490 | 1.7 | 73.14 | B083 | TBS80D4 | 18000 | 7784 |
| 19.2 | 491 | 3.5 | 72.76 | B103 | TBS90S4 | 22000 | 9708 |
| 19.1 | 494 | 1.7 | 73.14 | B083 | TBS90S4 | 18000 | 7799 |
| 18.9 | 505 | 3.5 | 50.24 | B103 | TP/TBP100LR6 | 22000 | 9755 |
| 18.7 | 511 | 1.2 | 50.81 | B063 | TP/TBP100LR6 | 12000 | 4913 |
| 18.7 | 510 | 3.5 | 50.24 | B103 | TH/TBH90L6 | 22000 | 9786 |
| 18.6 | 515 | 1.7 | 51.19 | B083 | TP/TBP100LR6 | 18000 | 7861 |
| 18.5 | 516 | 1.2 | 50.81 | B063 | TH/TBH90L6 | 12000 | 4926 |
| 18.5 | 512 | 1.2 | 77.48 | B063 | TH/TBH90S4 | 12000 | 4935 |
| 18.5 | 512 | 1.2 | 77.48 | B063 | TP/TBP90S4 | 12000 | 4935 |
| 18.5 | 516 | 3.5 | 50.24 | B103 | TBS90L6 | 22000 | 9818 |
| 18.4 | 520 | 1.7 | 51.19 | B083 | TH/TBH90L6 | 18000 | 7884 |
| 18.3 | 522 | 1.2 | 50.81 | B063 | TBS90L6 | 12000 | 4938 |
| 18.2 | 520 | 1.2 | 77.48 | B063 | TBS80D4 | 12000 | 4952 |
| 18.2 | 526 | 1.7 | 51.19 | B083 | TBS90L6 | 18000 | 7908 |
| 18.1 | 523 | 1.1 | 77.48 | B063 | TBS90S4 | 12000 | 4960 |
| 18.1 | 522 | 3.3 | 78.92 | B103 | TH/TBH90S4 | 22000 | 9885 |
| 18.1 | 522 | 3.3 | 78.92 | B103 | TP/TBP90S4 | 22000 | 9885 |
| 17.9 | 529 | 3.2 | 78.92 | B103 | TBS80D4 | 22000 | 9927 |
| 17.9 | 533 | 3.3 | 53.02 | B103 | TP/TBP100LR6 | 22000 | 9914 |
| 17.7 | 534 | 1.6 | 80.76 | B083 | TH/TBH90S4 | 18000 | 7971 |
| 17.7 | 534 | 1.6 | 80.76 | B083 | TP/TBP90S4 | 18000 | 7971 |
| 17.7 | 539 | 3.3 | 53.02 | B103 | TH/TBH90L6 | 22000 | 9946 |
| 17.7 | 533 | 3.2 | 78.92 | B103 | TBS90S4 | 22000 | 9949 |
| 17.5 | 542 | 1.6 | 80.76 | B083 | TBS80D4 | 18000 | 8002 |
| 17.5 | 544 | 3.3 | 53.02 | B103 | TBS90L6 | 22000 | 9978 |
| 17.3 | 545 | 1.6 | 80.76 | B083 | TBS90S4 | 18000 | 8018 |
| 17.3 | 527 | 2.6 | 165.25 | B103 | TP/TBP80B2 | 22000 | 10038 |
| 17.2 | 531 | 2.5 | 165.25 | B103 | TH/TBH80B2 | 22000 | 10059 |
| 17.1 | 558 | 1.6 | 55.52 | B083 | TP/TBP100LR6 | 18000 | 8041 |
| 17.1 | 553 | 3.3 | 83.66 | B103 | TH/TBH90S4 | 22000 | 10060 |
| 17.1 | 553 | 3.3 | 83.66 | B103 | TP/TBP90S4 | 22000 | 10060 |
| 17.1 | 533 | 2.5 | 165.25 | B103 | TBS80B2 | 22000 | 10070 |
| 16.9 | 564 | 1.6 | 55.52 | B083 | TH/TBH90L6 | 18000 | 8064 |
| 16.9 | 561 | 3.2 | 83.66 | B103 | TBS80D4 | 22000 | 10102 |
| 16.7 | 572 | 1.1 | 56.93 | B063 | TP/TBP100LR6 | 12000 | 5047 |
| 16.7 | 570 | 1.6 | 55.52 | B083 | TBS90L6 | 18000 | 8088 |
| 16.7 | 565 | 3.2 | 83.66 | B103 | TBS90S4 | 22000 | 10124 |
| 16.5 | 578 | 1.1 | 56.93 | B063 | TH/TBH90L6 | 12000 | 5059 |

# 5.1 B/BA MOTORIDUTTORE (50Hz)



## 1.10 kW

| n2 [rpm] | M2 [Nm] | fs | i | Riduttore | Motore | Fr2 D-S-P [N] | Fr2 C [N] |
|---|---|---|---|---|---|---|---|
| 16.3 | 584 | 1.1 | 56.93 | B063 | TBS90L6 | 12000 | 5072 |
| 16.2 | 588 | 3.0 | 58.50 | B103 | TP/TBP100LR6 | 22000 | 10211 |
| 16.1 | 594 | 3.0 | 58.50 | B103 | TH/TBH90L6 | 22000 | 10243 |
| 15.9 | 601 | 3.0 | 58.50 | B103 | TBS90L6 | 22000 | 10276 |
| 15.8 | 603 | 1.5 | 59.96 | B083 | TP/TBP100LR6 | 18000 | 8212 |
| 15.7 | 609 | 1.5 | 59.96 | B083 | TH/TBH90L6 | 18000 | 8236 |
| 15.6 | 606 | 1.0 | 90.33 | B063 | TBS80D4 | 12000 | 5133 |
| 15.5 | 610 | 1.4 | 92.19 | B083 | TH/TBH90S4 | 18000 | 8267 |
| 15.5 | 610 | 1.4 | 92.19 | B083 | TP/TBP90S4 | 18000 | 8267 |
| 15.5 | 616 | 1.4 | 59.96 | B083 | TBS90L6 | 18000 | 8260 |
| 15.5 | 610 | 2.9 | 92.31 | B103 | TH/TBH90S4 | 22000 | 10360 |
| 15.5 | 610 | 2.9 | 92.31 | B103 | TP/TBP90S4 | 22000 | 10360 |
| 15.3 | 618 | 1.4 | 92.19 | B083 | TBS80D4 | 18000 | 8299 |
| 15.3 | 619 | 2.9 | 92.31 | B103 | TBS80D4 | 22000 | 10403 |
| 15.2 | 623 | 1.4 | 92.19 | B083 | TBS90S4 | 18000 | 8315 |
| 15.2 | 623 | 2.9 | 92.31 | B103 | TBS90S4 | 22000 | 10425 |
| 14.9 | 641 | 1.4 | 63.74 | B083 | TP/TBP100LR6 | 18000 | 8350 |
| 14.7 | 648 | 1.4 | 63.74 | B083 | TH/TBH90L6 | 18000 | 8374 |
| 14.6 | 654 | 1.4 | 63.74 | B083 | TBS90L6 | 18000 | 8398 |
| 14.6 | 652 | 2.7 | 64.89 | B103 | TP/TBP100LR6 | 22000 | 10530 |
| 14.5 | 659 | 2.7 | 64.89 | B103 | TH/TBH90L6 | 22000 | 10563 |
| 14.3 | 666 | 2.7 | 64.89 | B103 | TBS90L6 | 22000 | 10596 |
| 14.2 | 665 | 1.3 | 100.57 | B083 | TH/TBH90S4 | 18000 | 8464 |
| 14.2 | 665 | 1.3 | 100.57 | B083 | TP/TBP90S4 | 18000 | 8464 |
| 14.0 | 674 | 1.3 | 100.57 | B083 | TBS80D4 | 18000 | 8497 |
| 13.9 | 679 | 1.3 | 100.57 | B083 | TBS90S4 | 18000 | 8513 |
| 13.9 | 689 | 2.6 | 68.58 | B103 | TP/TBP100LR6 | 22000 | 10703 |
| 13.7 | 695 | 1.3 | 69.14 | B083 | TP/TBP100LR6 | 18000 | 8535 |
| 13.7 | 697 | 2.6 | 68.58 | B103 | TH/TBH90L6 | 22000 | 10736 |
| 13.6 | 702 | 1.3 | 69.14 | B083 | TH/TBH90L6 | 18000 | 8559 |
| 13.6 | 696 | 1.2 | 105.29 | B083 | TH/TBH90S4 | 18000 | 8569 |
| 13.6 | 696 | 1.2 | 105.29 | B083 | TP/TBP90S4 | 18000 | 8569 |
| 13.6 | 704 | 2.5 | 68.58 | B103 | TBS90L6 | 22000 | 10770 |
| 13.6 | 697 | 2.6 | 105.44 | B103 | TH/TBH90S4 | 22000 | 10776 |
| 13.6 | 697 | 2.6 | 105.44 | B103 | TP/TBP90S4 | 22000 | 10776 |
| 13.5 | 710 | 1.3 | 69.14 | B083 | TBS90L6 | 18000 | 8583 |
| 13.4 | 706 | 1.2 | 105.29 | B083 | TBS80D4 | 18000 | 8601 |
| 13.4 | 707 | 2.5 | 105.44 | B103 | TBS80D4 | 22000 | 10821 |
| 13.3 | 711 | 1.2 | 105.29 | B083 | TBS90S4 | 18000 | 8618 |
| 13.3 | 712 | 2.5 | 105.44 | B103 | TBS90S4 | 22000 | 10843 |
| 13.1 | 731 | 2.4 | 72.76 | B103 | TP/TBP100LR6 | 22000 | 10891 |

# 5.1 B/BA MOTORIDUTTORE (50Hz)



## 1.10 kW

| n2 [rpm] | M2 [Nm] | fs | i | Riduttore | Motore | Fr2 D-S-P [N] | Fr2 C [N] |
|---|---|---|---|---|---|---|---|
| 13.0 | 735 | 1.2 | 73.14 | B083 | TP/TBP100LR6 | 18000 | 8663 |
| 12.9 | 743 | 1.2 | 73.14 | B083 | TH/TBH90L6 | 18000 | 8687 |
| 12.9 | 739 | 2.4 | 72.76 | B103 | TH/TBH90L6 | 22000 | 10925 |
| 12.8 | 747 | 2.4 | 72.76 | B103 | TBS90L6 | 22000 | 10959 |
| 12.7 | 751 | 1.2 | 73.14 | B083 | TBS90L6 | 18000 | 8712 |
| 12.5 | 759 | 2.4 | 114.80 | B103 | TH/TBH90S4 | 22000 | 11048 |
| 12.5 | 759 | 2.4 | 114.80 | B103 | TP/TBP90S4 | 22000 | 11048 |
| 12.3 | 769 | 1.1 | 116.25 | B083 | TH/TBH90S4 | 18000 | 8797 |
| 12.3 | 769 | 1.1 | 116.25 | B083 | TP/TBP90S4 | 18000 | 8797 |
| 12.3 | 770 | 2.3 | 114.80 | B103 | TBS80D4 | 22000 | 11094 |
| 12.2 | 775 | 2.3 | 114.80 | B103 | TBS90S4 | 22000 | 11117 |
| 12.1 | 780 | 1.1 | 116.25 | B083 | TBS80D4 | 18000 | 8829 |
| 12.0 | 785 | 1.1 | 116.25 | B083 | TBS90S4 | 18000 | 8846 |
| 12.0 | 793 | 2.3 | 78.92 | B103 | TP/TBP100LR6 | 22000 | 11153 |
| 11.9 | 802 | 2.2 | 78.92 | B103 | TH/TBH90L6 | 22000 | 11187 |
| 11.9 | 796 | 2.3 | 120.42 | B103 | TH/TBH90S4 | 22000 | 11203 |
| 11.9 | 796 | 2.3 | 120.42 | B103 | TP/TBP90S4 | 22000 | 11203 |
| 11.8 | 812 | 1.1 | 80.76 | B083 | TP/TBP100LR6 | 18000 | 8891 |
| 11.8 | 810 | 2.2 | 78.92 | B103 | TBS90L6 | 22000 | 11222 |
| 11.7 | 807 | 2.2 | 120.42 | B103 | TBS80D4 | 22000 | 11249 |
| 11.6 | 820 | 1.1 | 80.76 | B083 | TH/TBH90L6 | 18000 | 8915 |
| 11.6 | 813 | 2.2 | 120.42 | B103 | TBS90S4 | 22000 | 11272 |
| 11.5 | 829 | 1.1 | 80.76 | B083 | TBS90L6 | 18000 | 8940 |
| 11.4 | 841 | 2.2 | 83.66 | B103 | TP/TBP100LR6 | 22000 | 11343 |
| 11.3 | 838 | 1.0 | 126.76 | B083 | TH/TBH90S4 | 18000 | 8997 |
| 11.3 | 838 | 1.0 | 126.76 | B083 | TP/TBP90S4 | 18000 | 8997 |
| 11.2 | 850 | 2.2 | 83.66 | B103 | TH/TBH90L6 | 22000 | 11377 |
| 11.1 | 850 | 1.0 | 126.76 | B083 | TBS80D4 | 18000 | 9030 |
| 11.1 | 859 | 2.2 | 83.66 | B103 | TBS90L6 | 22000 | 11413 |
| 11.0 | 856 | 1.0 | 126.76 | B083 | TBS90S4 | 18000 | 9046 |
| 10.8 | 878 | 2.0 | 132.87 | B103 | TH/TBH90S4 | 22000 | 11527 |
| 10.8 | 878 | 2.0 | 132.87 | B103 | TP/TBP90S4 | 22000 | 11527 |
| 10.8 | 878 | 4.0 | 129.96 | B123 | TBS90S4 | 30000 | 16223 |
| 10.6 | 891 | 2.0 | 132.87 | B103 | TBS80D4 | 22000 | 11574 |
| 10.5 | 897 | 2.0 | 132.87 | B103 | TBS90S4 | 22000 | 11597 |
| 10.3 | 927 | 1.0 | 92.19 | B083 | TP/TBP100LR6 | 18000 | 9197 |
| 10.3 | 928 | 2.0 | 92.31 | B103 | TP/TBP100LR6 | 22000 | 11668 |
| 10.2 | 937 | 1.0 | 92.19 | B083 | TH/TBH90L6 | 18000 | 9221 |
| 10.2 | 938 | 2.0 | 92.31 | B103 | TH/TBH90L6 | 22000 | 11704 |
| 10.1 | 947 | 0.9 | 92.19 | B083 | TBS90L6 | 18000 | 9246 |
| 10.1 | 948 | 2.0 | 92.31 | B103 | TBS90L6 | 22000 | 11740 |

# 5.1 B/BA MOTORIDUTTORE (50Hz)



## 1.10 kW

| n2 [rpm] | M2 [Nm] | fs | i | Riduttore | Motore | Fr2 D-S-P [N] | Fr2 C [N] |
|---|---|---|---|---|---|---|---|
| 9.9 | 957 | 1.9 | 144.69 | B103 | TH/TBH90S4 | 22000 | 11812 |
| 9.9 | 957 | 1.9 | 144.69 | B103 | TP/TBP90S4 | 22000 | 11812 |
| 9.9 | 955 | 3.7 | 144.43 | B123 | TH/TBH90S4 | 30000 | 16612 |
| 9.9 | 955 | 3.7 | 144.43 | B123 | TP/TBP90S4 | 30000 | 16612 |
| 9.7 | 970 | 1.9 | 144.69 | B103 | TBS80D4 | 22000 | 11860 |
| 9.7 | 977 | 1.8 | 144.69 | B103 | TBS90S4 | 22000 | 11884 |
| 9.7 | 975 | 3.6 | 144.43 | B123 | TBS90S4 | 30000 | 16711 |
| 9.5 | 1002 | 3.7 | 99.70 | B123 | TP/TBP100LR6 | 30000 | 16778 |
| 9.0 | 1060 | 1.8 | 105.44 | B103 | TP/TBP100LR6 | 22000 | 12118 |
| 8.9 | 1071 | 1.8 | 105.44 | B103 | TH/TBH90L6 | 22000 | 12154 |
| 8.9 | 1072 | 3.4 | 106.65 | B123 | TP/TBP100LR6 | 30000 | 17093 |
| 8.9 | 1059 | 3.3 | 160.23 | B123 | TH/TBH90S4 | 30000 | 17098 |
| 8.9 | 1059 | 3.3 | 160.23 | B123 | TP/TBP90S4 | 30000 | 17098 |
| 8.8 | 1083 | 1.7 | 105.44 | B103 | TBS90L6 | 22000 | 12191 |
| 8.8 | 1083 | 3.4 | 106.65 | B123 | TH/TBH90L6 | 30000 | 17143 |
| 8.7 | 1093 | 1.6 | 165.25 | B103 | TH/TBH90S4 | 22000 | 12265 |
| 8.7 | 1093 | 1.6 | 165.25 | B103 | TP/TBP90S4 | 22000 | 12265 |
| 8.7 | 1095 | 3.4 | 106.65 | B123 | TBS90L6 | 30000 | 17193 |
| 8.7 | 1082 | 3.2 | 160.23 | B123 | TBS90S4 | 30000 | 17198 |
| 8.5 | 1116 | 1.6 | 165.25 | B103 | TBS90S4 | 22000 | 12338 |
| 8.5 | 1108 | 1.6 | 165.25 | B103 | TBS80D4 | 22000 | 12313 |
| 8.3 | 1154 | 1.6 | 114.80 | B103 | TP/TBP100LR6 | 22000 | 12410 |
| 8.2 | 1166 | 1.6 | 114.80 | B103 | TH/TBH90L6 | 22000 | 12447 |
| 8.1 | 1179 | 1.6 | 114.80 | B103 | TBS90L6 | 22000 | 12484 |
| 7.9 | 1210 | 1.6 | 120.42 | B103 | TP/TBP100LR6 | 22000 | 12576 |
| 7.9 | 1215 | 3.0 | 119.60 | B123 | TH/TBH90L6 | 30000 | 17685 |
| 7.9 | 1202 | 3.1 | 119.60 | B123 | TP/TBP100LR6 | 30000 | 17635 |
| 7.9 | 1193 | 2.9 | 180.40 | B123 | TH/TBH90S4 | 30000 | 17661 |
| 7.9 | 1193 | 2.9 | 180.40 | B123 | TP/TBP90S4 | 30000 | 17661 |
| 7.8 | 1223 | 1.5 | 120.42 | B103 | TH/TBH90L6 | 22000 | 12613 |
| 7.8 | 1228 | 3.0 | 119.60 | B123 | TBS90L6 | 30000 | 17736 |
| 7.8 | 1218 | 2.9 | 180.40 | B123 | TBS90S4 | 30000 | 17762 |
| 7.7 | 1236 | 1.5 | 120.42 | B103 | TBS90L6 | 22000 | 12650 |
| 7.3 | 1306 | 2.8 | 129.96 | B123 | TP/TBP100LR6 | 30000 | 18032 |
| 7.2 | 1320 | 2.8 | 129.96 | B123 | TH/TBH90L6 | 30000 | 18083 |
| 7.2 | 1334 | 2.8 | 129.96 | B123 | TBS90L6 | 30000 | 18135 |
| 7.1 | 1350 | 1.4 | 132.87 | B103 | TH/TBH90L6 | 22000 | 12958 |
| 7.1 | 1336 | 1.4 | 132.87 | B103 | TP/TBP100LR6 | 22000 | 12921 |
| 7.0 | 1364 | 1.4 | 132.87 | B103 | TBS90L6 | 22000 | 12996 |
| 7.0 | 1371 | 3.8 | 136.44 | B143 | TP/TBP100LR6 | 40000 | 40000 |
| 6.6 | 1454 | 1.3 | 144.69 | B103 | TP/TBP100LR6 | 22000 | 13223 |

# 5.1 B/BA MOTORIDUTTORE (50Hz)



## 1.10 kW

| n2 [rpm] | M2 [Nm] | fs | i | Riduttore | Motore | Fr2 D-S-P [N] | Fr2 C [N] |
|---|---|---|---|---|---|---|---|
| 6.6 | 1452 | 2.5 | 144.43 | B123 | TP/TBP100LR6 | 30000 | 18541 |
| 6.5 | 1470 | 1.3 | 144.69 | B103 | TH/TBH90L6 | 22000 | 13261 |
| 6.5 | 1467 | 2.5 | 144.43 | B123 | TH/TBH90L6 | 30000 | 18593 |
| 6.4 | 1486 | 1.3 | 144.69 | B103 | TBS90L6 | 22000 | 13299 |
| 6.4 | 1483 | 2.5 | 144.43 | B123 | TBS90L6 | 30000 | 18644 |
| 6.4 | 1504 | 3.5 | 149.59 | B143 | TP/TBP100LR6 | 40000 | 40000 |
| 5.9 | 1628 | 2.3 | 160.23 | B123 | TH/TBH90L6 | 30000 | 19097 |
| 5.9 | 1611 | 2.3 | 160.23 | B123 | TP/TBP100LR6 | 30000 | 19045 |
| 5.8 | 1645 | 2.2 | 160.23 | B123 | TBS90L6 | 30000 | 19149 |
| 5.7 | 1679 | 1.1 | 165.25 | B103 | TH/TBH90L6 | 22000 | 13738 |
| 5.7 | 1661 | 1.1 | 165.25 | B103 | TP/TBP100LR6 | 22000 | 13700 |
| 5.7 | 1674 | 3.1 | 166.53 | B143 | TP/TBP100LR6 | 40000 | 40000 |
| 5.6 | 1697 | 1.1 | 165.25 | B103 | TBS90L6 | 22000 | 13776 |
| 5.3 | 1813 | 2.0 | 180.40 | B123 | TP/TBP100LR6 | 30000 | 19624 |
| 5.2 | 1833 | 2.0 | 180.40 | B123 | TH/TBH90L6 | 30000 | 19675 |
| 5.2 | 1852 | 2.0 | 180.40 | B123 | TBS90L6 | 30000 | 19728 |
| 5.1 | 1882 | 2.8 | 187.24 | B143 | TP/TBP100LR6 | 40000 | 40000 |

## 1.50 kW

| n2 [rpm] | M2 [Nm] | fs | i | Riduttore | Motore | Fr2 D-S-P [N] | Fr2 C [N] |
|---|---|---|---|---|---|---|---|
| 369.0 | 36 | 1.9 | 7.62 | BA42 | TBS80C2 | - | 1438 |
| 362.7 | 36 | 3.3 | 7.91 | BA52 | TH/TBH90S2 | - | 1550 |
| 361.5 | 36 | 3.3 | 7.91 | BA52 | TP/TBP90S2 | - | 1552 |
| 358.9 | 37 | 3.3 | 7.91 | BA52 | TBS90S2 | - | 1555 |
| 355.1 | 37 | 3.2 | 7.91 | BA52 | TBS80C2 | - | 1561 |
| 303.3 | 43 | 2.8 | 9.46 | BA52 | TH/TBH90S2 | - | 1645 |
| 302.3 | 43 | 2.8 | 9.46 | BA52 | TP/TBP90S2 | - | 1647 |
| 300.2 | 44 | 2.7 | 9.46 | BA52 | TBS90S2 | - | 1651 |
| 297.0 | 44 | 2.7 | 9.46 | BA52 | TBS80C2 | - | 1657 |
| 264.5 | 50 | 1.4 | 10.62 | BA42 | TBS80C2 | - | 1607 |
| 248.0 | 53 | 2.3 | 11.57 | BA52 | TH/TBH90S2 | - | 1759 |
| 247.1 | 53 | 2.3 | 11.57 | BA52 | TP/TBP90S2 | - | 1761 |
| 245.4 | 54 | 2.2 | 11.57 | BA52 | TBS90S2 | - | 1765 |
| 242.8 | 54 | 2.2 | 11.57 | BA52 | TBS80C2 | - | 1772 |
| 217.0 | 61 | 1.1 | 12.95 | BA42 | TBS80C2 | - | 1716 |
| 196.2 | 67 | 1.8 | 14.63 | BA52 | TH/TBH90S2 | - | 1902 |
| 195.5 | 67 | 1.8 | 14.63 | BA52 | TP/TBP90S2 | - | 1904 |
| 194.2 | 68 | 1.8 | 14.63 | BA52 | TBS90S2 | - | 1909 |
| 192.1 | 68 | 1.8 | 14.63 | BA52 | TBS80C2 | - | 1915 |
| 180.7 | 75 | 2.1 | 7.91 | BA52 | TP/TBP90L4 | - | 1955 |

# 5.1 B/BA MOTORIDUTTORE (50Hz)



## 1.50 kW

| n2 [rpm] | M2 [Nm] | fs | i | Riduttore | Motore | Fr2 D-S-P [N] | Fr2 C [N] |
|---|---|---|---|---|---|---|---|
| 179.5 | 76 | 2.1 | 7.91 | BA52 | TH/TBH90L4 | - | 1959 |
| 176.9 | 77 | 2.1 | 7.91 | BA52 | TBS90LA4 | - | 1969 |
| 170.6 | 77 | 1.2 | 16.47 | BA42 | TBS80C2 | - | 1860 |
| 167.7 | 78 | 1.9 | 17.11 | BA52 | TH/TBH90S2 | - | 2004 |
| 167.1 | 79 | 1.9 | 17.11 | BA52 | TP/TBP90S2 | - | 2006 |
| 166.0 | 79 | 1.9 | 17.11 | BA52 | TBS90S2 | - | 2011 |
| 164.5 | 79 | 3.8 | 5.71 | B063 | TH/TBH100L6 | 9158 | 2617 |
| 164.5 | 79 | 3.8 | 5.71 | B063 | TP/TBP100L6 | 9158 | 2617 |
| 164.2 | 80 | 1.9 | 17.11 | BA52 | TBS80C2 | - | 2018 |
| 162.7 | 80 | 3.8 | 5.71 | B063 | TBS100LA6 | 9188 | 2625 |
| 160.0 | 82 | 3.8 | 17.94 | BA72 | TH/TBH90S2 | 5158 | 2579 |
| 159.4 | 82 | 3.8 | 17.94 | BA72 | TP/TBP90S2 | 5164 | 2582 |
| 158.3 | 83 | 3.8 | 17.94 | BA72 | TBS90S2 | 5176 | 2588 |
| 151.1 | 90 | 1.8 | 9.46 | BA52 | TP/TBP90L4 | - | 2075 |
| 150.1 | 91 | 1.8 | 9.46 | BA52 | TH/TBH90L4 | - | 2080 |
| 148.0 | 92 | 1.7 | 9.46 | BA52 | TBS90LA4 | - | 2090 |
| 142.2 | 96 | 3.7 | 10.06 | BA72 | TP/TBP90L4 | 5365 | 2682 |
| 141.2 | 96 | 3.6 | 10.06 | BA72 | TH/TBH90L4 | 5377 | 2689 |
| 140.3 | 94 | 1.6 | 20.46 | BA52 | TH/TBH90S2 | - | 2127 |
| 139.8 | 94 | 1.6 | 20.46 | BA52 | TP/TBP90S2 | - | 2130 |
| 139.2 | 98 | 3.6 | 10.06 | BA72 | TBS90LA4 | 5403 | 2701 |
| 138.8 | 95 | 1.6 | 20.46 | BA52 | TBS90S2 | - | 2135 |
| 137.3 | 96 | 1.6 | 20.46 | BA52 | TBS80C2 | - | 2142 |
| 136.6 | 95 | 3.7 | 6.88 | B063 | TH/TBH100L6 | 9686 | 2767 |
| 136.6 | 95 | 3.7 | 6.88 | B063 | TP/TBP100L6 | 9686 | 2767 |
| 135.2 | 96 | 3.7 | 6.88 | B063 | TBS100LA6 | 9717 | 2776 |
| 129.3 | 102 | 3.1 | 22.19 | BA72 | TH/TBH90S2 | 5537 | 2768 |
| 128.9 | 102 | 3.1 | 22.19 | BA72 | TP/TBP90S2 | 5543 | 2772 |
| 128.4 | 101 | 3.6 | 7.32 | B063 | TH/TBH100L6 | 9869 | 2820 |
| 128.4 | 101 | 3.6 | 7.32 | B063 | TP/TBP100L6 | 9869 | 2820 |
| 128.0 | 103 | 3.1 | 22.19 | BA72 | TBS90S2 | 5556 | 2778 |
| 127.0 | 103 | 3.6 | 7.32 | B063 | TBS100LA6 | 9900 | 2829 |
| 123.6 | 110 | 1.5 | 11.57 | BA52 | TP/TBP90L4 | - | 2219 |
| 122.7 | 111 | 1.4 | 11.57 | BA52 | TH/TBH90L4 | - | 2224 |
| 121.0 | 113 | 1.4 | 11.57 | BA52 | TBS90LA4 | - | 2235 |
| 114.9 | 118 | 3.0 | 12.44 | BA72 | TP/TBP90L4 | 5759 | 2879 |
| 114.7 | 115 | 1.3 | 25.03 | BA52 | TH/TBH90S2 | - | 2275 |
| 114.3 | 115 | 1.3 | 25.03 | BA52 | TP/TBP90S2 | - | 2278 |
| 114.1 | 119 | 2.9 | 12.44 | BA72 | TH/TBH90L4 | 5772 | 2886 |
| 113.5 | 116 | 1.3 | 25.03 | BA52 | TBS90S2 | - | 2283 |
| 112.5 | 122 | 3.0 | 8.36 | BA72 | TH/TBH100L6 | 5800 | 2900 |

# 5.1 B/BA MOTORIDUTTORE (50Hz)



## 1.50 kW

| n2 [rpm] | M2 [Nm] | fs | i | Riduttore | Motore | Fr2 D-S-P [N] | Fr2 C [N] |
|---|---|---|---|---|---|---|---|
| 112.5 | 122 | 3.0 | 8.36 | BA72 | TP/TBP100L6 | 5800 | 2900 |
| 112.5 | 121 | 2.9 | 12.44 | BA72 | TBS90LA4 | 5800 | 2900 |
| 112.3 | 117 | 1.3 | 25.03 | BA52 | TBS80C2 | - | 2291 |
| 111.3 | 124 | 3.0 | 8.36 | BA72 | TBS100LA6 | 5821 | 2910 |
| 110.0 | 113 | 4.0 | 26.09 | B063 | TH/TBH90S2 | 10356 | 2959 |
| 109.6 | 113 | 4.0 | 26.09 | B063 | TP/TBP90S2 | 10366 | 2962 |
| 108.9 | 114 | 3.9 | 26.09 | B063 | TBS90S2 | 10388 | 2968 |
| 107.7 | 116 | 3.9 | 26.09 | B063 | TBS80C2 | 10421 | 2977 |
| 104.6 | 126 | 2.5 | 27.45 | BA72 | TH/TBH90S2 | 5943 | 2972 |
| 104.2 | 126 | 2.5 | 27.45 | BA72 | TP/TBP90S2 | 5950 | 2975 |
| 103.5 | 127 | 2.5 | 27.45 | BA72 | TBS90S2 | 5964 | 2982 |
| 102.6 | 127 | 3.8 | 9.16 | B063 | TH/TBH100L6 | 10546 | 3013 |
| 102.6 | 127 | 3.8 | 9.16 | B063 | TP/TBP100L6 | 10546 | 3013 |
| 102.4 | 122 | 3.7 | 28.03 | B063 | TH/TBH90S2 | 10578 | 3022 |
| 102.4 | 128 | 2.5 | 27.45 | BA72 | TBS80C2 | 5985 | 2993 |
| 102.0 | 122 | 3.7 | 28.03 | B063 | TP/TBP90S2 | 10589 | 3025 |
| 101.5 | 128 | 3.8 | 9.16 | B063 | TBS100LA6 | 10579 | 3023 |
| 101.3 | 123 | 3.7 | 28.03 | B063 | TBS90S2 | 10611 | 3032 |
| 100.2 | 124 | 3.6 | 28.03 | B063 | TBS80C2 | 10644 | 3041 |
| 97.8 | 139 | 1.1 | 14.63 | BA52 | TP/TBP90L4 | - | 2399 |
| 97.1 | 140 | 1.1 | 14.63 | BA52 | TH/TBH90L4 | - | 2405 |
| 95.9 | 142 | 3.0 | 14.91 | BA72 | TP/TBP90L4 | 6116 | 3058 |
| 95.7 | 142 | 1.1 | 14.63 | BA52 | TBS90LA4 | - | 2416 |
| 95.3 | 143 | 2.9 | 14.91 | BA72 | TH/TBH90L4 | 6131 | 3065 |
| 93.9 | 145 | 2.9 | 14.91 | BA72 | TBS90LA4 | 6160 | 3080 |
| 93.4 | 147 | 2.5 | 10.06 | BA72 | TH/TBH100L6 | 6170 | 3085 |
| 93.4 | 147 | 2.5 | 10.06 | BA72 | TP/TBP100L6 | 6170 | 3085 |
| 92.4 | 149 | 2.5 | 10.06 | BA72 | TBS100LA6 | 6192 | 3096 |
| 91.6 | 142 | 3.8 | 10.26 | B063 | TH/TBH100L6 | 10902 | 3115 |
| 91.6 | 142 | 3.8 | 10.26 | B063 | TP/TBP100L6 | 10902 | 3115 |
| 90.7 | 145 | 1.0 | 31.63 | BA52 | TH/TBH90S2 | - | 2460 |
| 90.6 | 144 | 3.8 | 10.26 | B063 | TBS100LA6 | 10936 | 3124 |
| 90.4 | 145 | 1.0 | 31.63 | BA52 | TP/TBP90S2 | - | 2462 |
| 89.8 | 146 | 1.0 | 31.63 | BA52 | TBS90S2 | - | 2468 |
| 88.8 | 148 | 1.0 | 31.63 | BA52 | TBS80C2 | - | 2477 |
| 86.9 | 151 | 2.1 | 33.04 | BA72 | TH/TBH90S2 | 6322 | 3161 |
| 86.6 | 152 | 2.1 | 33.04 | BA72 | TP/TBP90S2 | 6329 | 3165 |
| 86.0 | 153 | 2.1 | 33.04 | BA72 | TBS90S2 | 6344 | 3172 |
| 85.8 | 145 | 3.1 | 33.43 | B063 | TH/TBH90S2 | 11139 | 3182 |
| 85.5 | 145 | 3.1 | 33.43 | B063 | TP/TBP90S2 | 11150 | 3186 |
| 85.2 | 153 | 3.7 | 11.03 | B063 | TH/TBH100L6 | 11131 | 3180 |

# 5.1 B/BA MOTORIDUTTORE (50Hz)



## 1.50 kW

| n2 [rpm] | M2 [Nm] | fs | i | Riduttore | Motore | Fr2 D-S-P [N] | Fr2 C [N] |
|---|---|---|---|---|---|---|---|
| 85.2 | 153 | 3.7 | 11.03 | B063 | TP/TBP100L6 | 11131 | 3180 |
| 85.0 | 154 | 2.0 | 33.04 | BA72 | TBS80C2 | 6367 | 3183 |
| 84.9 | 146 | 3.1 | 33.43 | B063 | TBS90S2 | 11173 | 3192 |
| 84.3 | 154 | 3.7 | 11.03 | B063 | TBS100LA6 | 11165 | 3190 |
| 84.1 | 153 | 3.9 | 17.00 | B063 | TP/TBP90L4 | 11181 | 3194 |
| 84.1 | 148 | 3.0 | 33.43 | B063 | TBS80C2 | 11207 | 3202 |
| 83.6 | 163 | 1.2 | 17.11 | BA52 | TP/TBP90L4 | - | 2528 |
| 83.5 | 154 | 3.9 | 17.00 | B063 | TH/TBH90L4 | 11203 | 3201 |
| 83.0 | 164 | 1.2 | 17.11 | BA52 | TH/TBH90L4 | - | 2534 |
| 82.3 | 157 | 3.8 | 17.00 | B063 | TBS90LA4 | 11249 | 3214 |
| 81.8 | 166 | 1.2 | 17.11 | BA52 | TBS90LA4 | - | 2546 |
| 79.7 | 171 | 2.5 | 17.94 | BA72 | TP/TBP90L4 | 6506 | 3253 |
| 79.1 | 172 | 2.4 | 17.94 | BA72 | TH/TBH90L4 | 6521 | 3261 |
| 78.0 | 174 | 2.4 | 17.94 | BA72 | TBS90LA4 | 6552 | 3276 |
| 76.1 | 171 | 3.6 | 12.35 | B063 | TH/TBH100L6 | 11499 | 3286 |
| 76.1 | 171 | 3.6 | 12.35 | B063 | TP/TBP100L6 | 11499 | 3286 |
| 75.5 | 182 | 2.0 | 12.44 | BA72 | TH/TBH100L6 | 6623 | 3312 |
| 75.5 | 182 | 2.0 | 12.44 | BA72 | TP/TBP100L6 | 6623 | 3312 |
| 75.3 | 173 | 3.5 | 12.35 | B063 | TBS100LA6 | 11534 | 3296 |
| 74.7 | 184 | 2.0 | 12.44 | BA72 | TBS100LA6 | 6647 | 3323 |
| 74.4 | 167 | 2.7 | 38.58 | B063 | TH/TBH90S2 | 11608 | 3317 |
| 74.1 | 168 | 2.7 | 38.58 | B063 | TP/TBP90S2 | 11620 | 3320 |
| 73.6 | 169 | 2.7 | 38.58 | B063 | TBS90S2 | 11643 | 3327 |
| 72.8 | 171 | 2.6 | 38.58 | B063 | TBS80C2 | 11679 | 3337 |
| 72.5 | 172 | 3.7 | 39.60 | B083 | TH/TBH90S2 | 18000 | 5196 |
| 72.2 | 172 | 3.7 | 39.60 | B083 | TP/TBP90S2 | 18000 | 5201 |
| 71.7 | 173 | 3.7 | 39.60 | B083 | TBS90S2 | 18000 | 5212 |
| 71.5 | 182 | 3.4 | 13.15 | B063 | TH/TBH100L6 | 11705 | 3344 |
| 71.5 | 182 | 3.4 | 13.15 | B063 | TP/TBP100L6 | 11705 | 3344 |
| 71.0 | 175 | 3.6 | 39.60 | B083 | TBS80C2 | 18000 | 5229 |
| 70.7 | 184 | 3.4 | 13.15 | B063 | TBS100LA6 | 11741 | 3354 |
| 70.2 | 187 | 1.6 | 40.87 | BA72 | TH/TBH90S2 | 6786 | 3393 |
| 70.0 | 188 | 1.6 | 40.87 | BA72 | TP/TBP90S2 | 6794 | 3397 |
| 69.9 | 195 | 1.0 | 20.46 | BA52 | TP/TBP90L4 | - | 2683 |
| 69.5 | 189 | 1.6 | 40.87 | BA72 | TBS90S2 | 6810 | 3405 |
| 69.4 | 196 | 1.0 | 20.46 | BA52 | TH/TBH90L4 | - | 2689 |
| 68.8 | 191 | 1.6 | 40.87 | BA72 | TBS80C2 | 6834 | 3417 |
| 68.4 | 199 | 1.0 | 20.46 | BA52 | TBS90LA4 | - | 2702 |
| 66.8 | 186 | 3.4 | 42.95 | B083 | TH/TBH90S2 | 18000 | 5326 |
| 66.6 | 187 | 3.4 | 42.95 | B083 | TP/TBP90S2 | 18000 | 5331 |
| 66.4 | 187 | 2.4 | 43.22 | B063 | TH/TBH90S2 | 11990 | 3426 |

# 5.1 B/BA MOTORIDUTTORE (50Hz)



## 1.50 kW

| n2 [rpm] | M2 [Nm] | fs | i | Riduttore | Motore | Fr2 D-S-P [N] | Fr2 C [N] |
|---|---|---|---|---|---|---|---|
| 66.2 | 188 | 2.4 | 43.22 | B063 | TP/TBP90S2 | 12000 | 3429 |
| 66.1 | 188 | 3.4 | 42.95 | B083 | TBS90S2 | 18000 | 5343 |
| 65.7 | 189 | 2.4 | 43.22 | B063 | TBS90S2 | 12000 | 3436 |
| 65.4 | 190 | 3.4 | 42.95 | B083 | TBS80C2 | 18000 | 5360 |
| 65.4 | 190 | 1.8 | 43.89 | BA73 | TH/TBH90S2 | 6950 | 3475 |
| 65.2 | 191 | 1.8 | 43.89 | BA73 | TP/TBP90S2 | 6958 | 3479 |
| 65.0 | 191 | 2.4 | 43.22 | B063 | TBS80C2 | 12000 | 3446 |
| 64.7 | 192 | 1.8 | 43.89 | BA73 | TBS90S2 | 6974 | 3487 |
| 64.4 | 211 | 2.0 | 22.19 | BA72 | TP/TBP90L4 | 6984 | 3492 |
| 64.0 | 213 | 2.0 | 22.19 | BA72 | TH/TBH90L4 | 7000 | 3500 |
| 64.0 | 194 | 1.7 | 43.89 | BA73 | TBS80C2 | 6999 | 3499 |
| 63.9 | 202 | 3.0 | 22.39 | B063 | TP/TBP90L4 | 12000 | 3455 |
| 63.4 | 203 | 3.0 | 22.39 | B063 | TH/TBH90L4 | 12000 | 3461 |
| 63.2 | 197 | 3.2 | 45.44 | B083 | TH/TBH90S2 | 18000 | 5417 |
| 63.1 | 218 | 2.0 | 14.91 | BA72 | TH/TBH100L6 | 7034 | 3517 |
| 63.1 | 218 | 2.0 | 14.91 | BA72 | TP/TBP100L6 | 7034 | 3517 |
| 63.1 | 216 | 1.9 | 22.19 | BA72 | TBS90LA4 | 7033 | 3517 |
| 62.9 | 198 | 3.2 | 45.44 | B083 | TP/TBP90S2 | 18000 | 5423 |
| 62.9 | 209 | 1.3 | 45.64 | BA72 | TH/TBH90S2 | 7041 | 3520 |
| 62.7 | 210 | 1.3 | 45.64 | BA72 | TP/TBP90S2 | 7049 | 3525 |
| 62.5 | 206 | 2.9 | 22.39 | B063 | TBS90LA4 | 12000 | 3475 |
| 62.5 | 199 | 3.2 | 45.44 | B083 | TBS90S2 | 18000 | 5434 |
| 62.4 | 220 | 2.0 | 14.91 | BA72 | TBS100LA6 | 7059 | 3530 |
| 62.2 | 211 | 1.2 | 45.64 | BA72 | TBS90S2 | 7066 | 3533 |
| 61.9 | 210 | 2.9 | 15.18 | B063 | TH/TBH100L6 | 12000 | 3481 |
| 61.9 | 210 | 2.9 | 15.18 | B063 | TP/TBP100L6 | 12000 | 3481 |
| 61.8 | 201 | 3.2 | 45.44 | B083 | TBS80C2 | 18000 | 5452 |
| 61.6 | 213 | 1.2 | 45.64 | BA72 | TBS80C2 | 7091 | 3545 |
| 61.3 | 212 | 2.9 | 15.18 | B063 | TBS100LA6 | 12000 | 3492 |
| 56.6 | 230 | 3.9 | 16.60 | B083 | TH/TBH100L6 | 18000 | 5586 |
| 56.6 | 230 | 3.9 | 16.60 | B083 | TP/TBP100L6 | 18000 | 5586 |
| 56.5 | 220 | 2.0 | 50.81 | B063 | TH/TBH90S2 | 12000 | 3584 |
| 56.3 | 221 | 2.0 | 50.81 | B063 | TP/TBP90S2 | 12000 | 3588 |
| 56.1 | 222 | 2.9 | 51.19 | B083 | TH/TBH90S2 | 18000 | 5614 |
| 56.0 | 232 | 3.8 | 16.60 | B083 | TBS100LA6 | 18000 | 5603 |
| 55.9 | 223 | 2.0 | 50.81 | B063 | TBS90S2 | 12000 | 3595 |
| 55.9 | 223 | 2.9 | 51.19 | B083 | TP/TBP90S2 | 18000 | 5620 |
| 55.5 | 224 | 2.8 | 51.19 | B083 | TBS90S2 | 18000 | 5632 |
| 55.3 | 225 | 2.0 | 50.81 | B063 | TBS80C2 | 12000 | 3605 |
| 55.3 | 236 | 2.7 | 17.00 | B063 | TH/TBH100L6 | 12000 | 3592 |
| 55.3 | 236 | 2.7 | 17.00 | B063 | TP/TBP100L6 | 12000 | 3592 |

# 5.1 B/BA MOTORIDUTTORE (50Hz)



## 1.50 kW

| n2 [rpm] | M2 [Nm] | fs | i | Riduttore | Motore | Fr2 D-S-P [N] | Fr2 C [N] |
|---|---|---|---|---|---|---|---|
| 54.9 | 227 | 2.8 | 51.19 | B083 | TBS80C2 | 18000 | 5650 |
| 54.8 | 235 | 2.6 | 26.09 | B063 | TP/TBP90L4 | 12000 | 3604 |
| 54.7 | 238 | 2.6 | 17.00 | B063 | TBS100LA6 | 12000 | 3603 |
| 54.4 | 237 | 2.5 | 26.09 | B063 | TH/TBH90L4 | 12000 | 3611 |
| 54.3 | 229 | 1.5 | 52.83 | BA73 | TH/TBH90S2 | 7393 | 3696 |
| 54.1 | 230 | 1.5 | 52.83 | BA73 | TP/TBP90S2 | 7401 | 3701 |
| 53.8 | 231 | 1.5 | 52.83 | BA73 | TBS90S2 | 7419 | 3709 |
| 53.7 | 240 | 2.5 | 26.09 | B063 | TBS90LA4 | 12000 | 3625 |
| 53.5 | 241 | 3.5 | 26.71 | B083 | TP/TBP90L4 | 18000 | 5683 |
| 53.2 | 243 | 3.5 | 26.71 | B083 | TH/TBH90L4 | 18000 | 5695 |
| 53.2 | 234 | 1.4 | 52.83 | BA73 | TBS80C2 | 7445 | 3723 |
| 52.4 | 246 | 3.5 | 26.71 | B083 | TBS90LA4 | 18000 | 5719 |
| 52.4 | 262 | 1.7 | 17.94 | BA72 | TH/TBH100L6 | 7483 | 3741 |
| 52.4 | 262 | 1.7 | 17.94 | BA72 | TP/TBP100L6 | 7483 | 3741 |
| 52.2 | 251 | 1.0 | 54.94 | BA72 | TH/TBH90S2 | 7490 | 3745 |
| 52.1 | 261 | 1.6 | 27.45 | BA72 | TP/TBP90L4 | 7497 | 3748 |
| 52.1 | 252 | 1.0 | 54.94 | BA72 | TP/TBP90S2 | 7499 | 3749 |
| 51.8 | 265 | 1.7 | 17.94 | BA72 | TBS100LA6 | 7509 | 3755 |
| 51.7 | 241 | 2.6 | 55.52 | B083 | TH/TBH90S2 | 18000 | 5752 |
| 51.7 | 263 | 1.6 | 27.45 | BA72 | TH/TBH90L4 | 7514 | 3757 |
| 51.7 | 254 | 1.0 | 54.94 | BA72 | TBS90S2 | 7516 | 3758 |
| 51.5 | 242 | 2.6 | 55.52 | B083 | TP/TBP90S2 | 18000 | 5758 |
| 51.3 | 254 | 3.5 | 18.32 | B083 | TH/TBH100L6 | 18000 | 5752 |
| 51.3 | 254 | 3.5 | 18.32 | B083 | TP/TBP100L6 | 18000 | 5752 |
| 51.1 | 243 | 2.6 | 55.52 | B083 | TBS90S2 | 18000 | 5770 |
| 51.1 | 257 | 1.0 | 54.94 | BA72 | TBS80C2 | 7543 | 3771 |
| 51.0 | 253 | 2.4 | 28.03 | B063 | TP/TBP90L4 | 12000 | 3675 |
| 51.0 | 267 | 1.6 | 27.45 | BA72 | TBS90LA4 | 7550 | 3775 |
| 50.8 | 257 | 3.5 | 18.32 | B083 | TBS100LA6 | 18000 | 5771 |
| 50.7 | 255 | 2.4 | 28.03 | B063 | TH/TBH90L4 | 12000 | 3682 |
| 50.6 | 246 | 2.6 | 55.52 | B083 | TBS80C2 | 18000 | 5789 |
| 50.4 | 247 | 1.8 | 56.93 | B063 | TH/TBH90S2 | 12000 | 3698 |
| 50.2 | 248 | 1.8 | 56.93 | B063 | TP/TBP90S2 | 12000 | 3702 |
| 49.9 | 249 | 1.8 | 56.93 | B063 | TBS90S2 | 12000 | 3709 |
| 49.9 | 258 | 2.3 | 28.03 | B063 | TBS90LA4 | 12000 | 3696 |
| 49.4 | 252 | 1.8 | 56.93 | B063 | TBS80C2 | 12000 | 3719 |
| 48.5 | 266 | 3.2 | 29.50 | B083 | TP/TBP90L4 | 18000 | 5852 |
| 48.1 | 268 | 3.2 | 29.50 | B083 | TH/TBH90L4 | 18000 | 5864 |
| 47.9 | 260 | 2.5 | 59.96 | B083 | TH/TBH90S2 | 18000 | 5885 |
| 47.7 | 261 | 2.4 | 59.96 | B083 | TP/TBP90S2 | 18000 | 5891 |
| 47.5 | 272 | 3.1 | 29.50 | B083 | TBS90LA4 | 18000 | 5889 |

# 5.1 B/BA MOTORIDUTTORE (50Hz)



## 1.50 kW

| n2 [rpm] | M2 [Nm] | fs | i | Riduttore | Motore | Fr2 D-S-P [N] | Fr2 C [N] |
|---|---|---|---|---|---|---|---|
| 47.4 | 263 | 2.4 | 59.96 | B083 | TBS90S2 | 18000 | 5903 |
| 46.9 | 265 | 2.4 | 59.96 | B083 | TBS80C2 | 18000 | 5922 |
| 45.0 | 287 | 3.0 | 31.80 | B083 | TP/TBP90L4 | 18000 | 5983 |
| 45.0 | 276 | 2.3 | 63.74 | B083 | TH/TBH90S2 | 18000 | 5992 |
| 44.9 | 277 | 2.3 | 63.74 | B083 | TP/TBP90S2 | 18000 | 5998 |
| 44.7 | 289 | 2.9 | 31.80 | B083 | TH/TBH90L4 | 18000 | 5995 |
| 44.6 | 279 | 2.3 | 63.74 | B083 | TBS90S2 | 18000 | 6011 |
| 44.1 | 282 | 2.3 | 63.74 | B083 | TBS80C2 | 18000 | 6030 |
| 44.0 | 293 | 2.9 | 31.80 | B083 | TBS90LA4 | 18000 | 6020 |
| 43.9 | 283 | 1.2 | 65.35 | BA73 | TH/TBH90S2 | 7936 | 3968 |
| 43.8 | 284 | 1.2 | 65.35 | BA73 | TP/TBP90S2 | 7945 | 3972 |
| 43.5 | 286 | 1.2 | 65.35 | BA73 | TBS90S2 | 7964 | 3982 |
| 43.3 | 314 | 1.3 | 33.04 | BA72 | TP/TBP90L4 | 7975 | 3987 |
| 43.0 | 317 | 1.3 | 33.04 | BA72 | TH/TBH90L4 | 7993 | 3997 |
| 43.0 | 289 | 1.2 | 65.35 | BA73 | TBS80C2 | 7992 | 3996 |
| 42.8 | 301 | 2.0 | 33.43 | B063 | TP/TBP90L4 | 12000 | 3851 |
| 42.5 | 304 | 2.0 | 33.43 | B063 | TH/TBH90L4 | 12000 | 3859 |
| 42.4 | 325 | 1.4 | 22.19 | BA72 | TH/TBH100L6 | 8032 | 4016 |
| 42.4 | 325 | 1.4 | 22.19 | BA72 | TP/TBP100L6 | 8032 | 4016 |
| 42.4 | 321 | 1.3 | 33.04 | BA72 | TBS90LA4 | 8031 | 4016 |
| 42.0 | 310 | 2.0 | 22.39 | B063 | TH/TBH100L6 | 12000 | 3867 |
| 42.0 | 310 | 2.0 | 22.39 | B063 | TP/TBP100L6 | 12000 | 3867 |
| 41.9 | 308 | 1.9 | 33.43 | B063 | TBS90LA4 | 12000 | 3873 |
| 41.9 | 328 | 1.3 | 22.19 | BA72 | TBS100LA6 | 8061 | 4030 |
| 41.5 | 300 | 1.5 | 69.16 | B063 | TH/TBH90S2 | 12000 | 3896 |
| 41.5 | 314 | 2.0 | 22.39 | B063 | TBS100LA6 | 12000 | 3877 |
| 41.5 | 311 | 2.7 | 34.49 | B083 | TP/TBP90L4 | 18000 | 6127 |
| 41.5 | 300 | 2.1 | 69.14 | B083 | TH/TBH90S2 | 18000 | 6137 |
| 41.4 | 301 | 1.5 | 69.16 | B063 | TP/TBP90S2 | 12000 | 3900 |
| 41.4 | 301 | 2.1 | 69.14 | B083 | TP/TBP90S2 | 18000 | 6143 |
| 41.2 | 316 | 2.8 | 22.82 | B083 | TH/TBH100L6 | 18000 | 6134 |
| 41.2 | 316 | 2.8 | 22.82 | B083 | TP/TBP100L6 | 18000 | 6134 |
| 41.2 | 313 | 2.7 | 34.49 | B083 | TH/TBH90L4 | 18000 | 6139 |
| 41.1 | 303 | 1.5 | 69.16 | B063 | TBS90S2 | 12000 | 3907 |
| 41.1 | 303 | 2.1 | 69.14 | B083 | TBS90S2 | 18000 | 6156 |
| 40.8 | 319 | 2.8 | 22.82 | B083 | TBS100LA6 | 18000 | 6153 |
| 40.6 | 306 | 1.5 | 69.16 | B063 | TBS80C2 | 12000 | 3918 |
| 40.6 | 306 | 2.1 | 69.14 | B083 | TBS80C2 | 18000 | 6175 |
| 40.6 | 318 | 2.7 | 34.49 | B083 | TBS90LA4 | 18000 | 6164 |
| 39.2 | 317 | 2.0 | 73.14 | B083 | TH/TBH90S2 | 18000 | 6238 |
| 39.1 | 318 | 2.0 | 73.14 | B083 | TP/TBP90S2 | 18000 | 6245 |

# 5.1 B/BA MOTORIDUTTORE (50Hz)



## 1.50 kW

| n2 [rpm] | M2 [Nm] | fs | i | Riduttore | Motore | Fr2 D-S-P [N] | Fr2 C [N] |
|---|---|---|---|---|---|---|---|
| 38.8 | 320 | 2.0 | 73.14 | B083 | TBS90S2 | 18000 | 6257 |
| 38.6 | 322 | 4.0 | 72.76 | B103 | TBS80C2 | 22000 | 7770 |
| 38.4 | 324 | 2.0 | 73.14 | B083 | TBS80C2 | 18000 | 6277 |
| 37.1 | 348 | 1.7 | 38.58 | B063 | TP/TBP90L4 | 12000 | 3997 |
| 37.0 | 336 | 1.3 | 77.48 | B063 | TH/TBH90S2 | 12000 | 4013 |
| 36.9 | 337 | 1.3 | 77.48 | B063 | TP/TBP90S2 | 12000 | 4017 |
| 36.8 | 350 | 1.7 | 38.58 | B063 | TH/TBH90L4 | 12000 | 4004 |
| 36.7 | 339 | 1.3 | 77.48 | B063 | TBS90S2 | 12000 | 4024 |
| 36.4 | 342 | 3.7 | 78.92 | B103 | TH/TBH90S2 | 22000 | 7915 |
| 36.3 | 355 | 1.7 | 38.58 | B063 | TBS90LA4 | 12000 | 4018 |
| 36.3 | 343 | 1.3 | 77.48 | B063 | TBS80C2 | 12000 | 4035 |
| 36.2 | 343 | 3.7 | 78.92 | B103 | TP/TBP90S2 | 22000 | 7923 |
| 36.1 | 357 | 2.4 | 39.60 | B083 | TP/TBP90L4 | 18000 | 6376 |
| 36.0 | 361 | 1.7 | 26.09 | B063 | TH/TBH100L6 | 12000 | 4021 |
| 36.0 | 361 | 1.7 | 26.09 | B063 | TP/TBP100L6 | 12000 | 4021 |
| 36.0 | 346 | 3.7 | 78.92 | B103 | TBS90S2 | 22000 | 7940 |
| 35.9 | 360 | 2.4 | 39.60 | B083 | TH/TBH90L4 | 18000 | 6388 |
| 35.6 | 365 | 1.7 | 26.09 | B063 | TBS100LA6 | 12000 | 4032 |
| 35.6 | 349 | 3.6 | 78.92 | B103 | TBS80C2 | 22000 | 7966 |
| 35.5 | 350 | 1.8 | 80.76 | B083 | TH/TBH90S2 | 18000 | 6420 |
| 35.4 | 351 | 1.8 | 80.76 | B083 | TP/TBP90S2 | 18000 | 6426 |
| 35.4 | 365 | 2.3 | 39.60 | B083 | TBS90LA4 | 18000 | 6414 |
| 35.2 | 354 | 1.8 | 80.76 | B083 | TBS90S2 | 18000 | 6439 |
| 35.2 | 370 | 2.4 | 26.71 | B083 | TH/TBH100L6 | 18000 | 6419 |
| 35.2 | 370 | 2.4 | 26.71 | B083 | TP/TBP100L6 | 18000 | 6419 |
| 35.0 | 389 | 1.0 | 40.87 | BA72 | TP/TBP90L4 | 8560 | 4280 |
| 34.8 | 374 | 2.4 | 26.71 | B083 | TBS100LA6 | 18000 | 6439 |
| 34.8 | 358 | 1.8 | 80.76 | B083 | TBS80C2 | 18000 | 6459 |
| 34.7 | 392 | 1.0 | 40.87 | BA72 | TH/TBH90L4 | 8580 | 4290 |
| 34.3 | 363 | 3.7 | 83.66 | B103 | TH/TBH90S2 | 22000 | 8057 |
| 34.3 | 397 | 1.0 | 40.87 | BA72 | TBS90LA4 | 8621 | 4311 |
| 34.2 | 364 | 3.7 | 83.66 | B103 | TP/TBP90S2 | 22000 | 8065 |
| 34.2 | 401 | 1.1 | 27.45 | BA72 | TH/TBH100L6 | 8622 | 4311 |
| 34.2 | 401 | 1.1 | 27.45 | BA72 | TP/TBP100L6 | 8622 | 4311 |
| 33.9 | 366 | 3.7 | 83.66 | B103 | TBS90S2 | 22000 | 8083 |
| 33.9 | 406 | 1.1 | 27.45 | BA72 | TBS100LA6 | 8653 | 4326 |
| 33.6 | 370 | 3.6 | 83.66 | B103 | TBS80C2 | 22000 | 8109 |
| 33.5 | 388 | 1.6 | 28.03 | B063 | TH/TBH100L6 | 12000 | 4094 |
| 33.5 | 388 | 1.6 | 28.03 | B063 | TP/TBP100L6 | 12000 | 4094 |
| 33.3 | 387 | 2.2 | 42.95 | B083 | TP/TBP90L4 | 18000 | 6525 |
| 33.2 | 392 | 1.6 | 28.03 | B063 | TBS100LA6 | 12000 | 4105 |

# 5.1 B/BA MOTORIDUTTORE (50Hz)



## 1.50 kW

| n2 [rpm] | M2 [Nm] | fs | i | Riduttore | Motore | Fr2 D-S-P [N] | Fr2 C [N] |
|---|---|---|---|---|---|---|---|
| 33.1 | 390 | 1.5 | 43.22 | B063 | TP/TBP90L4 | 12000 | 4113 |
| 33.1 | 390 | 2.2 | 42.95 | B083 | TH/TBH90L4 | 18000 | 6538 |
| 32.9 | 392 | 1.5 | 43.22 | B063 | TH/TBH90L4 | 12000 | 4120 |
| 32.6 | 396 | 2.1 | 42.95 | B083 | TBS90LA4 | 18000 | 6565 |
| 32.6 | 396 | 1.1 | 43.89 | BA73 | TP/TBP90L4 | 8766 | 4383 |
| 32.4 | 398 | 1.5 | 43.22 | B063 | TBS90LA4 | 12000 | 4134 |
| 32.4 | 398 | 1.1 | 43.89 | BA73 | TH/TBH90L4 | 8787 | 4393 |
| 31.9 | 409 | 2.2 | 29.50 | B083 | TH/TBH100L6 | 18000 | 6602 |
| 31.9 | 409 | 2.2 | 29.50 | B083 | TP/TBP100L6 | 18000 | 6602 |
| 31.9 | 404 | 1.1 | 43.89 | BA73 | TBS90LA4 | 8828 | 4414 |
| 31.5 | 413 | 2.2 | 29.50 | B083 | TBS100LA6 | 18000 | 6622 |
| 31.5 | 410 | 2.1 | 45.44 | B083 | TP/TBP90L4 | 18000 | 6630 |
| 31.3 | 413 | 2.1 | 45.44 | B083 | TH/TBH90L4 | 18000 | 6643 |
| 31.1 | 400 | 1.1 | 90.33 | B063 | TBS80C2 | 12000 | 4194 |
| 31.1 | 400 | 1.6 | 92.19 | B083 | TH/TBH90S2 | 18000 | 6667 |
| 31.1 | 400 | 3.4 | 92.31 | B103 | TH/TBH90S2 | 22000 | 8302 |
| 31.0 | 401 | 1.6 | 92.19 | B083 | TP/TBP90S2 | 18000 | 6674 |
| 31.0 | 402 | 3.4 | 92.31 | B103 | TP/TBP90S2 | 22000 | 8311 |
| 30.8 | 404 | 1.6 | 92.19 | B083 | TBS90S2 | 18000 | 6687 |
| 30.8 | 418 | 2.0 | 45.44 | B083 | TBS90LA4 | 18000 | 6670 |
| 30.8 | 423 | 4.0 | 30.55 | B103 | TH/TBH100L6 | 22000 | 8313 |
| 30.8 | 423 | 4.0 | 30.55 | B103 | TP/TBP100L6 | 22000 | 8313 |
| 30.8 | 404 | 3.3 | 92.31 | B103 | TBS90S2 | 22000 | 8328 |
| 30.5 | 408 | 1.6 | 92.19 | B083 | TBS80C2 | 18000 | 6707 |
| 30.4 | 428 | 3.9 | 30.55 | B103 | TBS100LA6 | 22000 | 8340 |
| 30.4 | 409 | 3.3 | 92.31 | B103 | TBS80C2 | 22000 | 8355 |
| 30.2 | 426 | 4.0 | 47.28 | B103 | TP/TBP90L4 | 22000 | 8360 |
| 30.0 | 429 | 4.0 | 47.28 | B103 | TH/TBH90L4 | 22000 | 8377 |
| 29.6 | 440 | 2.0 | 31.80 | B083 | TH/TBH100L6 | 18000 | 6743 |
| 29.6 | 440 | 2.0 | 31.80 | B083 | TP/TBP100L6 | 18000 | 6743 |
| 29.6 | 435 | 3.9 | 47.28 | B103 | TBS90LA4 | 22000 | 8413 |
| 29.2 | 445 | 2.0 | 31.80 | B083 | TBS100LA6 | 18000 | 6763 |
| 28.5 | 436 | 1.5 | 100.57 | B083 | TH/TBH90S2 | 18000 | 6833 |
| 28.5 | 453 | 3.8 | 50.24 | B103 | TP/TBP90L4 | 22000 | 8514 |
| 28.4 | 437 | 1.5 | 100.57 | B083 | TP/TBP90S2 | 18000 | 6840 |
| 28.4 | 458 | 3.9 | 33.07 | B103 | TH/TBH100L6 | 22000 | 8513 |
| 28.4 | 458 | 3.9 | 33.07 | B103 | TP/TBP100L6 | 22000 | 8513 |
| 28.4 | 483 | 0.9 | 33.04 | BA72 | TH/TBH100L6 | 9172 | 4586 |
| 28.4 | 483 | 0.9 | 33.04 | BA72 | TP/TBP100L6 | 9172 | 4586 |
| 28.3 | 456 | 3.7 | 50.24 | B103 | TH/TBH90L4 | 22000 | 8532 |
| 28.2 | 441 | 1.4 | 100.57 | B083 | TBS90S2 | 18000 | 6853 |

# 5.1 B/BA MOTORIDUTTORE (50Hz)



## 1.50 kW

| n2 [rpm] | M2 [Nm] | fs | i | Riduttore | Motore | Fr2 D-S-P [N] | Fr2 C [N] |
|---|---|---|---|---|---|---|---|
| 28.1 | 463 | 1.4 | 33.43 | B063 | TH/TBH100L6 | 12000 | 4273 |
| 28.1 | 463 | 1.4 | 33.43 | B063 | TP/TBP100L6 | 12000 | 4273 |
| 28.1 | 458 | 1.3 | 50.81 | B063 | TP/TBP90L4 | 12000 | 4277 |
| 28.1 | 463 | 3.9 | 33.07 | B103 | TBS100LA6 | 22000 | 8541 |
| 28.1 | 488 | 0.9 | 33.04 | BA72 | TBS100LA6 | 9204 | 4602 |
| 27.9 | 461 | 1.3 | 50.81 | B063 | TH/TBH90L4 | 12000 | 4285 |
| 27.9 | 461 | 1.8 | 51.19 | B083 | TP/TBP90L4 | 18000 | 6855 |
| 27.9 | 445 | 1.4 | 100.57 | B083 | TBS80C2 | 18000 | 6873 |
| 27.9 | 463 | 3.7 | 50.24 | B103 | TBS90LA4 | 22000 | 8568 |
| 27.8 | 468 | 1.3 | 33.43 | B063 | TBS100LA6 | 12000 | 4283 |
| 27.8 | 448 | 1.0 | 101.20 | B063 | TBS80C2 | 12000 | 4312 |
| 27.7 | 465 | 1.8 | 51.19 | B083 | TH/TBH90L4 | 18000 | 6868 |
| 27.6 | 468 | 1.3 | 50.81 | B063 | TBS90LA4 | 12000 | 4299 |
| 27.4 | 471 | 1.8 | 51.19 | B083 | TBS90LA4 | 18000 | 6895 |
| 27.3 | 478 | 1.9 | 34.49 | B083 | TH/TBH100L6 | 18000 | 6897 |
| 27.3 | 478 | 1.9 | 34.49 | B083 | TP/TBP100L6 | 18000 | 6897 |
| 27.3 | 456 | 1.4 | 105.29 | B083 | TH/TBH90S2 | 18000 | 6921 |
| 27.2 | 458 | 1.4 | 105.29 | B083 | TP/TBP90S2 | 18000 | 6928 |
| 27.2 | 457 | 3.0 | 105.44 | B103 | TH/TBH90S2 | 22000 | 8642 |
| 27.1 | 459 | 2.9 | 105.44 | B103 | TP/TBP90S2 | 22000 | 8651 |
| 27.1 | 476 | 0.9 | 52.83 | BA73 | TP/TBP90L4 | 9325 | 4663 |
| 27.0 | 461 | 1.4 | 105.29 | B083 | TBS90S2 | 18000 | 6941 |
| 27.0 | 483 | 1.8 | 34.49 | B083 | TBS100LA6 | 18000 | 6917 |
| 27.0 | 478 | 3.6 | 53.02 | B103 | TP/TBP90L4 | 22000 | 8653 |
| 26.9 | 462 | 2.9 | 105.44 | B103 | TBS90S2 | 22000 | 8670 |
| 26.9 | 480 | 0.9 | 52.83 | BA73 | TH/TBH90L4 | 9347 | 4673 |
| 26.8 | 481 | 3.5 | 53.02 | B103 | TH/TBH90L4 | 22000 | 8671 |
| 26.7 | 466 | 1.4 | 105.29 | B083 | TBS80C2 | 18000 | 6962 |
| 26.6 | 467 | 2.9 | 105.44 | B103 | TBS80C2 | 22000 | 8697 |
| 26.5 | 487 | 0.9 | 52.83 | BA73 | TBS90LA4 | 9391 | 4696 |
| 26.4 | 488 | 3.5 | 53.02 | B103 | TBS90LA4 | 22000 | 8708 |
| 26.2 | 497 | 3.6 | 35.87 | B103 | TH/TBH100L6 | 22000 | 8723 |
| 26.2 | 497 | 3.6 | 35.87 | B103 | TP/TBP100L6 | 22000 | 8723 |
| 25.9 | 502 | 3.6 | 35.87 | B103 | TBS100LA6 | 22000 | 8751 |
| 25.8 | 501 | 1.7 | 55.52 | B083 | TP/TBP90L4 | 18000 | 7011 |
| 25.6 | 504 | 1.7 | 55.52 | B083 | TH/TBH90L4 | 18000 | 7024 |
| 25.2 | 511 | 1.7 | 55.52 | B083 | TBS90LA4 | 18000 | 7052 |
| 25.1 | 513 | 1.2 | 56.93 | B063 | TP/TBP90L4 | 12000 | 4392 |
| 25.0 | 498 | 2.7 | 114.80 | B103 | TH/TBH90S2 | 22000 | 8866 |
| 24.9 | 517 | 1.2 | 56.93 | B063 | TH/TBH90L4 | 12000 | 4400 |
| 24.9 | 499 | 2.7 | 114.80 | B103 | TP/TBP90S2 | 22000 | 8875 |

# 5.1 B/BA MOTORIDUTTORE (50Hz)



## 1.50 kW

| n2 [rpm] | M2 [Nm] | fs | i | Riduttore | Motore | Fr2 D-S-P [N] | Fr2 C [N] |
|---|---|---|---|---|---|---|---|
| 24.7 | 504 | 1.3 | 116.25 | B083 | TH/TBH90S2 | 18000 | 7114 |
| 24.7 | 503 | 2.7 | 114.80 | B103 | TBS90S2 | 22000 | 8894 |
| 24.6 | 524 | 1.1 | 56.93 | B063 | TBS90LA4 | 12000 | 4414 |
| 24.6 | 506 | 1.3 | 116.25 | B083 | TP/TBP90S2 | 18000 | 7120 |
| 24.5 | 508 | 2.7 | 114.80 | B103 | TBS80C2 | 22000 | 8922 |
| 24.4 | 534 | 1.2 | 38.58 | B063 | TH/TBH100L6 | 12000 | 4416 |
| 24.4 | 534 | 1.2 | 38.58 | B063 | TP/TBP100L6 | 12000 | 4416 |
| 24.4 | 509 | 1.3 | 116.25 | B083 | TBS90S2 | 18000 | 7134 |
| 24.4 | 527 | 3.2 | 58.50 | B103 | TP/TBP90L4 | 22000 | 8910 |
| 24.3 | 531 | 3.2 | 58.50 | B103 | TH/TBH90L4 | 22000 | 8929 |
| 24.2 | 515 | 1.2 | 116.25 | B083 | TBS80C2 | 18000 | 7155 |
| 24.1 | 540 | 1.2 | 38.58 | B063 | TBS100LA6 | 12000 | 4427 |
| 23.9 | 541 | 1.6 | 59.96 | B083 | TP/TBP90L4 | 18000 | 7159 |
| 23.9 | 539 | 3.2 | 58.50 | B103 | TBS90LA4 | 22000 | 8967 |
| 23.8 | 522 | 2.6 | 120.42 | B103 | TH/TBH90S2 | 22000 | 8993 |
| 23.7 | 549 | 1.6 | 39.60 | B083 | TH/TBH100L6 | 18000 | 7162 |
| 23.7 | 549 | 1.6 | 39.60 | B083 | TP/TBP100L6 | 18000 | 7162 |
| 23.7 | 544 | 1.6 | 59.96 | B083 | TH/TBH90L4 | 18000 | 7173 |
| 23.7 | 524 | 2.6 | 120.42 | B103 | TP/TBP90S2 | 22000 | 9002 |
| 23.6 | 528 | 2.6 | 120.42 | B103 | TBS90S2 | 22000 | 9021 |
| 23.5 | 554 | 1.6 | 39.60 | B083 | TBS100LA6 | 18000 | 7183 |
| 23.4 | 552 | 1.5 | 59.96 | B083 | TBS90LA4 | 18000 | 7201 |
| 23.3 | 533 | 2.5 | 120.42 | B103 | TBS80C2 | 22000 | 9050 |
| 22.9 | 570 | 3.1 | 41.12 | B103 | TH/TBH100L6 | 22000 | 9085 |
| 22.9 | 570 | 3.1 | 41.12 | B103 | TP/TBP100L6 | 22000 | 9085 |
| 22.6 | 550 | 1.2 | 126.76 | B083 | TH/TBH90S2 | 18000 | 7284 |
| 22.6 | 551 | 1.2 | 126.76 | B083 | TP/TBP90S2 | 18000 | 7291 |
| 22.6 | 576 | 3.1 | 41.12 | B103 | TBS100LA6 | 22000 | 9114 |
| 22.4 | 575 | 1.5 | 63.74 | B083 | TP/TBP90L4 | 18000 | 7279 |
| 22.4 | 555 | 1.1 | 126.76 | B083 | TBS90S2 | 18000 | 7305 |
| 22.3 | 579 | 1.5 | 63.74 | B083 | TH/TBH90L4 | 18000 | 7293 |
| 22.2 | 561 | 1.1 | 126.76 | B083 | TBS80C2 | 18000 | 7326 |
| 22.0 | 587 | 1.4 | 63.74 | B083 | TBS90LA4 | 18000 | 7320 |
| 22.0 | 585 | 2.9 | 64.89 | B103 | TP/TBP90L4 | 22000 | 9188 |
| 21.9 | 595 | 1.5 | 42.95 | B083 | TH/TBH100L6 | 18000 | 7321 |
| 21.9 | 595 | 1.5 | 42.95 | B083 | TP/TBP100L6 | 18000 | 7321 |
| 21.9 | 589 | 2.9 | 64.89 | B103 | TH/TBH90L4 | 22000 | 9207 |
| 21.7 | 599 | 1.1 | 43.22 | B063 | TH/TBH100L6 | 12000 | 4528 |
| 21.7 | 599 | 1.1 | 43.22 | B063 | TP/TBP100L6 | 12000 | 4528 |
| 21.7 | 601 | 1.5 | 42.95 | B083 | TBS100LA6 | 18000 | 7342 |
| 21.6 | 598 | 2.8 | 64.89 | B103 | TBS90LA4 | 22000 | 9245 |

# 5.1 B/BA MOTORIDUTTORE (50Hz)



## 1.50 kW

| n2 [rpm] | M2 [Nm] | fs | i | Riduttore | Motore | Fr2 D-S-P [N] | Fr2 C [N] |
|---|---|---|---|---|---|---|---|
| 21.6 | 576 | 2.3 | 132.87 | B103 | TH/TBH90S2 | 22000 | 9260 |
| 21.5 | 605 | 1.0 | 43.22 | B063 | TBS100LA6 | 12000 | 4539 |
| 21.5 | 578 | 2.3 | 132.87 | B103 | TP/TBP90S2 | 22000 | 9269 |
| 21.4 | 582 | 2.3 | 132.87 | B103 | TBS90S2 | 22000 | 9289 |
| 21.1 | 588 | 2.3 | 132.87 | B103 | TBS80C2 | 22000 | 9318 |
| 21.1 | 618 | 2.9 | 44.61 | B103 | TH/TBH100L6 | 22000 | 9305 |
| 21.1 | 618 | 2.9 | 44.61 | B103 | TP/TBP100L6 | 22000 | 9305 |
| 20.9 | 618 | 2.7 | 68.58 | B103 | TP/TBP90L4 | 22000 | 9339 |
| 20.8 | 625 | 2.9 | 44.61 | B103 | TBS100LA6 | 22000 | 9334 |
| 20.7 | 623 | 1.0 | 69.16 | B063 | TP/TBP90L4 | 12000 | 4586 |
| 20.7 | 629 | 1.4 | 45.44 | B083 | TH/TBH100L6 | 18000 | 7431 |
| 20.7 | 629 | 1.4 | 45.44 | B083 | TP/TBP100L6 | 18000 | 7431 |
| 20.7 | 623 | 1.4 | 69.14 | B083 | TP/TBP90L4 | 18000 | 7439 |
| 20.7 | 623 | 2.7 | 68.58 | B103 | TH/TBH90L4 | 22000 | 9358 |
| 20.5 | 628 | 1.0 | 69.16 | B063 | TH/TBH90L4 | 12000 | 4592 |
| 20.5 | 628 | 1.4 | 69.14 | B083 | TH/TBH90L4 | 18000 | 7452 |
| 20.5 | 636 | 1.4 | 45.44 | B083 | TBS100LA6 | 18000 | 7452 |
| 20.4 | 632 | 2.7 | 68.58 | B103 | TBS90LA4 | 22000 | 9397 |
| 20.2 | 637 | 0.9 | 69.16 | B063 | TBS90LA4 | 12000 | 4606 |
| 20.2 | 637 | 1.3 | 69.14 | B083 | TBS90LA4 | 18000 | 7480 |
| 19.9 | 655 | 2.7 | 47.28 | B103 | TH/TBH100L6 | 22000 | 9465 |
| 19.9 | 655 | 2.7 | 47.28 | B103 | TP/TBP100L6 | 22000 | 9465 |
| 19.8 | 628 | 1.0 | 144.77 | B083 | TH/TBH90S2 | 18000 | 7549 |
| 19.8 | 630 | 1.0 | 144.77 | B083 | TP/TBP90S2 | 18000 | 7556 |
| 19.8 | 627 | 2.2 | 144.69 | B103 | TH/TBH90S2 | 22000 | 9495 |
| 19.8 | 629 | 2.1 | 144.69 | B103 | TP/TBP90S2 | 22000 | 9505 |
| 19.7 | 662 | 2.7 | 47.28 | B103 | TBS100LA6 | 22000 | 9495 |
| 19.7 | 656 | 2.6 | 72.76 | B103 | TP/TBP90L4 | 22000 | 9502 |
| 19.6 | 659 | 1.3 | 73.14 | B083 | TP/TBP90L4 | 18000 | 7550 |
| 19.6 | 634 | 1.0 | 144.77 | B083 | TBS90S2 | 18000 | 7570 |
| 19.6 | 634 | 2.1 | 144.69 | B103 | TBS90S2 | 22000 | 9525 |
| 19.5 | 661 | 2.6 | 72.76 | B103 | TH/TBH90L4 | 22000 | 9521 |
| 19.4 | 664 | 1.3 | 73.14 | B083 | TH/TBH90L4 | 18000 | 7564 |
| 19.4 | 641 | 2.1 | 144.69 | B103 | TBS80C2 | 22000 | 9554 |
| 19.2 | 670 | 2.5 | 72.76 | B103 | TBS90LA4 | 22000 | 9561 |
| 19.1 | 674 | 1.3 | 73.14 | B083 | TBS90LA4 | 18000 | 7592 |
| 18.7 | 696 | 2.6 | 50.24 | B103 | TH/TBH100L6 | 22000 | 9634 |
| 18.7 | 696 | 2.6 | 50.24 | B103 | TP/TBP100L6 | 22000 | 9634 |
| 18.5 | 703 | 2.5 | 50.24 | B103 | TBS100LA6 | 22000 | 9663 |
| 18.4 | 709 | 1.3 | 51.19 | B083 | TH/TBH100L6 | 18000 | 7666 |
| 18.4 | 709 | 1.3 | 51.19 | B083 | TP/TBP100L6 | 18000 | 7666 |

# 5.1 B/BA MOTORIDUTTORE (50Hz)



## 1.50 kW

| n2 [rpm] | M2 [Nm] | fs | i | Riduttore | Motore | Fr2 D-S-P [N] | Fr2 C [N] |
|---|---|---|---|---|---|---|---|
| 18.2 | 717 | 1.2 | 51.19 | B083 | TBS100LA6 | 18000 | 7687 |
| 18.1 | 712 | 2.4 | 78.92 | B103 | TP/TBP90L4 | 22000 | 9729 |
| 18.0 | 717 | 2.4 | 78.92 | B103 | TH/TBH90L4 | 22000 | 9749 |
| 17.9 | 695 | 3.8 | 160.23 | B123 | TH/TBH90S2 | 30000 | 13780 |
| 17.8 | 697 | 3.8 | 160.23 | B123 | TP/TBP90S2 | 30000 | 13793 |
| 17.7 | 728 | 1.2 | 80.76 | B083 | TP/TBP90L4 | 18000 | 7747 |
| 17.7 | 734 | 2.4 | 53.02 | B103 | TH/TBH100L6 | 22000 | 9785 |
| 17.7 | 734 | 2.4 | 53.02 | B103 | TP/TBP100L6 | 22000 | 9785 |
| 17.7 | 727 | 2.3 | 78.92 | B103 | TBS90LA4 | 22000 | 9789 |
| 17.7 | 702 | 3.7 | 160.23 | B123 | TBS90S2 | 30000 | 13821 |
| 17.6 | 733 | 1.2 | 80.76 | B083 | TH/TBH90L4 | 18000 | 7761 |
| 17.5 | 742 | 2.4 | 53.02 | B103 | TBS100LA6 | 22000 | 9815 |
| 17.4 | 716 | 1.9 | 165.25 | B103 | TH/TBH90S2 | 22000 | 9871 |
| 17.3 | 744 | 1.1 | 80.76 | B083 | TBS90LA4 | 18000 | 7789 |
| 17.3 | 719 | 1.9 | 165.25 | B103 | TP/TBP90S2 | 22000 | 9881 |
| 17.2 | 724 | 1.9 | 165.25 | B103 | TBS90S2 | 22000 | 9901 |
| 17.1 | 754 | 2.4 | 83.66 | B103 | TP/TBP90L4 | 22000 | 9895 |
| 17.0 | 760 | 2.4 | 83.66 | B103 | TH/TBH90L4 | 22000 | 9915 |
| 17.0 | 732 | 1.8 | 165.25 | B103 | TBS80C2 | 22000 | 9931 |
| 16.9 | 769 | 1.2 | 55.52 | B083 | TH/TBH100L6 | 18000 | 7827 |
| 16.9 | 769 | 1.2 | 55.52 | B083 | TP/TBP100L6 | 18000 | 7827 |
| 16.7 | 777 | 1.1 | 55.52 | B083 | TBS100LA6 | 18000 | 7849 |
| 16.7 | 770 | 2.3 | 83.66 | B103 | TBS90LA4 | 22000 | 9955 |
| 16.1 | 810 | 2.2 | 58.50 | B103 | TH/TBH100L6 | 22000 | 10065 |
| 16.1 | 810 | 2.2 | 58.50 | B103 | TP/TBP100L6 | 22000 | 10065 |
| 15.9 | 819 | 2.2 | 58.50 | B103 | TBS100LA6 | 22000 | 10096 |
| 15.9 | 782 | 3.4 | 180.40 | B123 | TH/TBH90S2 | 30000 | 14251 |
| 15.9 | 785 | 3.3 | 180.40 | B123 | TP/TBP90S2 | 30000 | 14265 |
| 15.7 | 831 | 1.1 | 59.96 | B083 | TP/TBP100L6 | 18000 | 7980 |
| 15.7 | 831 | 1.1 | 59.96 | B083 | TH/TBH100L6 | 18000 | 7980 |
| 15.7 | 790 | 3.3 | 180.40 | B123 | TBS90S2 | 30000 | 14293 |
| 15.5 | 839 | 1.1 | 59.96 | B083 | TBS100LA6 | 18000 | 8001 |
| 15.5 | 831 | 1.0 | 92.19 | B083 | TP/TBP90L4 | 18000 | 8011 |
| 15.5 | 832 | 2.2 | 92.31 | B103 | TP/TBP90L4 | 22000 | 10178 |
| 15.4 | 837 | 1.0 | 92.19 | B083 | TH/TBH90L4 | 18000 | 8025 |
| 15.4 | 838 | 2.1 | 92.31 | B103 | TH/TBH90L4 | 22000 | 10198 |
| 15.2 | 849 | 1.0 | 92.19 | B083 | TBS90LA4 | 18000 | 8053 |
| 15.2 | 850 | 2.1 | 92.31 | B103 | TBS90LA4 | 22000 | 10239 |
| 15.0 | 867 | 4.0 | 62.59 | B123 | TH/TBH100L6 | 30000 | 14432 |
| 15.0 | 867 | 4.0 | 62.59 | B123 | TP/TBP100L6 | 30000 | 14432 |
| 14.9 | 876 | 4.0 | 62.59 | B123 | TBS100LA6 | 30000 | 14475 |

# 5.1 B/BA MOTORIDUTTORE (50Hz)



## 1.50 kW

| n2 [rpm] | M2 [Nm] | fs | i | Riduttore | Motore | Fr2 D-S-P [N] | Fr2 C [N] |
|---|---|---|---|---|---|---|---|
| 14.7 | 883 | 1.0 | 63.74 | B083 | TH/TBH100L6 | 18000 | 8102 |
| 14.7 | 883 | 1.0 | 63.74 | B083 | TP/TBP100L6 | 18000 | 8102 |
| 14.6 | 892 | 1.0 | 63.74 | B083 | TBS100LA6 | 18000 | 8123 |
| 14.5 | 899 | 2.0 | 64.89 | B103 | TH/TBH100L6 | 22000 | 10366 |
| 14.5 | 899 | 2.0 | 64.89 | B103 | TP/TBP100L6 | 22000 | 10366 |
| 14.3 | 908 | 2.0 | 64.89 | B103 | TBS100LA6 | 22000 | 10397 |
| 14.2 | 907 | 0.9 | 100.57 | B083 | TP/TBP90L4 | 18000 | 8185 |
| 14.1 | 913 | 0.9 | 100.57 | B083 | TH/TBH90L4 | 18000 | 8199 |
| 13.9 | 926 | 0.9 | 100.57 | B083 | TBS90LA4 | 18000 | 8227 |
| 13.7 | 950 | 1.9 | 68.58 | B103 | TH/TBH100L6 | 22000 | 10528 |
| 13.7 | 950 | 1.9 | 68.58 | B103 | TP/TBP100L6 | 22000 | 10528 |
| 13.6 | 958 | 0.9 | 69.14 | B083 | TH/TBH100L6 | 18000 | 8264 |
| 13.6 | 958 | 0.9 | 69.14 | B083 | TP/TBP100L6 | 18000 | 8264 |
| 13.6 | 960 | 1.9 | 68.58 | B103 | TBS100LA6 | 22000 | 10560 |
| 13.6 | 951 | 1.9 | 105.44 | B103 | TP/TBP90L4 | 22000 | 10568 |
| 13.5 | 968 | 0.9 | 69.14 | B083 | TBS100LA6 | 18000 | 8285 |
| 13.5 | 957 | 1.9 | 105.44 | B103 | TH/TBH90L4 | 22000 | 10589 |
| 13.5 | 962 | 3.6 | 69.43 | B123 | TH/TBH100L6 | 30000 | 14851 |
| 13.5 | 962 | 3.6 | 69.43 | B123 | TP/TBP100L6 | 30000 | 14851 |
| 13.4 | 972 | 3.6 | 69.43 | B123 | TBS100LA6 | 30000 | 14894 |
| 13.4 | 962 | 3.6 | 106.65 | B123 | TP/TBP90L4 | 30000 | 14903 |
| 13.3 | 971 | 1.9 | 105.44 | B103 | TBS90LA4 | 22000 | 10631 |
| 13.3 | 968 | 3.6 | 106.65 | B123 | TH/TBH90L4 | 30000 | 14931 |
| 13.1 | 982 | 3.6 | 106.65 | B123 | TBS90LA4 | 30000 | 14989 |
| 12.9 | 1008 | 1.8 | 72.76 | B103 | TP/TBP100L6 | 22000 | 10704 |
| 12.9 | 1008 | 1.8 | 72.76 | B103 | TH/TBH100L6 | 22000 | 10704 |
| 12.8 | 1019 | 1.8 | 72.76 | B103 | TBS100LA6 | 22000 | 10736 |
| 12.6 | 1031 | 3.6 | 74.42 | B123 | TH/TBH100L6 | 30000 | 15133 |
| 12.6 | 1031 | 3.6 | 74.42 | B123 | TP/TBP100L6 | 30000 | 15133 |
| 12.5 | 1035 | 1.7 | 114.80 | B103 | TP/TBP90L4 | 22000 | 10821 |
| 12.5 | 1042 | 3.5 | 74.42 | B123 | TBS100LA6 | 30000 | 15177 |
| 12.4 | 1042 | 1.7 | 114.80 | B103 | TH/TBH90L4 | 22000 | 10842 |
| 12.2 | 1057 | 1.7 | 114.80 | B103 | TBS90LA4 | 22000 | 10885 |
| 12.0 | 1078 | 3.2 | 119.60 | B123 | TP/TBP90L4 | 30000 | 15372 |
| 11.9 | 1093 | 1.6 | 78.92 | B103 | TH/TBH100L6 | 22000 | 10947 |
| 11.9 | 1093 | 1.6 | 78.92 | B103 | TP/TBP100L6 | 22000 | 10947 |
| 11.9 | 1086 | 1.7 | 120.42 | B103 | TP/TBP90L4 | 22000 | 10965 |
| 11.9 | 1086 | 3.2 | 119.60 | B123 | TH/TBH90L4 | 30000 | 15401 |
| 11.8 | 1105 | 1.6 | 78.92 | B103 | TBS100LA6 | 22000 | 10980 |
| 11.8 | 1093 | 1.6 | 120.42 | B103 | TH/TBH90L4 | 22000 | 10986 |
| 11.7 | 1109 | 3.3 | 80.04 | B123 | TH/TBH100L6 | 30000 | 15432 |

# 5.1 B/BA MOTORIDUTTORE (50Hz)



## 1.50 kW

| n2 [rpm] | M2 [Nm] | fs | i | Riduttore | Motore | Fr2 D-S-P [N] | Fr2 C [N] |
|---|---|---|---|---|---|---|---|
| 11.7 | 1109 | 3.3 | 80.04 | B123 | TP/TBP100L6 | 30000 | 15432 |
| 11.7 | 1101 | 3.2 | 119.60 | B123 | TBS90LA4 | 30000 | 15460 |
| 11.6 | 1109 | 1.6 | 120.42 | B103 | TBS90LA4 | 22000 | 11029 |
| 11.6 | 1121 | 3.3 | 80.04 | B123 | TBS100LA6 | 30000 | 15476 |
| 11.2 | 1159 | 1.6 | 83.66 | B103 | TH/TBH100L6 | 22000 | 11123 |
| 11.2 | 1159 | 1.6 | 83.66 | B103 | TP/TBP100L6 | 22000 | 11123 |
| 11.1 | 1171 | 1.6 | 83.66 | B103 | TBS100LA6 | 22000 | 11156 |
| 11.0 | 1172 | 3.0 | 129.96 | B123 | TP/TBP90L4 | 30000 | 15716 |
| 10.9 | 1180 | 3.0 | 129.96 | B123 | TH/TBH90L4 | 30000 | 15745 |
| 10.8 | 1198 | 1.5 | 132.87 | B103 | TP/TBP90L4 | 22000 | 11264 |
| 10.8 | 1197 | 2.9 | 129.96 | B123 | TBS90LA4 | 30000 | 15804 |
| 10.7 | 1206 | 1.5 | 132.87 | B103 | TH/TBH90L4 | 22000 | 11286 |
| 10.5 | 1224 | 1.5 | 132.87 | B103 | TBS90LA4 | 22000 | 11329 |
| 10.5 | 1245 | 3.0 | 89.87 | B123 | TH/TBH100L6 | 30000 | 15911 |
| 10.5 | 1245 | 3.0 | 89.87 | B123 | TP/TBP100L6 | 30000 | 15911 |
| 10.3 | 1258 | 2.9 | 89.87 | B123 | TBS100LA6 | 30000 | 15955 |
| 10.2 | 1279 | 1.5 | 92.31 | B103 | TH/TBH100L6 | 22000 | 11424 |
| 10.2 | 1279 | 1.5 | 92.31 | B103 | TP/TBP100L6 | 22000 | 11424 |
| 10.1 | 1292 | 1.5 | 92.31 | B103 | TBS100LA6 | 22000 | 11456 |
| 9.9 | 1305 | 1.4 | 144.69 | B103 | TP/TBP90L4 | 22000 | 11526 |
| 9.9 | 1302 | 2.7 | 144.43 | B123 | TP/TBP90L4 | 30000 | 16156 |
| 9.9 | 1318 | 4.0 | 94.13 | B143 | TBS100LA6 | 40000 | 40000 |
| 9.8 | 1314 | 1.4 | 144.69 | B103 | TH/TBH90L4 | 22000 | 11548 |
| 9.8 | 1311 | 2.7 | 144.43 | B123 | TH/TBH90L4 | 30000 | 16186 |
| 9.7 | 1332 | 1.4 | 144.69 | B103 | TBS90LA4 | 22000 | 11592 |
| 9.7 | 1330 | 2.6 | 144.43 | B123 | TBS90LA4 | 30000 | 16245 |
| 9.4 | 1381 | 2.7 | 99.70 | B123 | TH/TBH100L6 | 30000 | 16343 |
| 9.4 | 1381 | 2.7 | 99.70 | B123 | TP/TBP100L6 | 30000 | 16343 |
| 9.3 | 1396 | 2.6 | 99.70 | B123 | TBS100LA6 | 30000 | 16388 |
| 8.9 | 1461 | 1.3 | 105.44 | B103 | TH/TBH100L6 | 22000 | 11834 |
| 8.9 | 1461 | 1.3 | 105.44 | B103 | TP/TBP100L6 | 22000 | 11834 |
| 8.9 | 1455 | 2.4 | 160.23 | B123 | TH/TBH90L4 | 30000 | 16621 |
| 8.9 | 1445 | 2.4 | 160.23 | B123 | TP/TBP90L4 | 30000 | 16592 |
| 8.9 | 1466 | 3.6 | 105.83 | B143 | TH/TBH100L6 | 40000 | 40000 |
| 8.9 | 1466 | 3.6 | 105.83 | B143 | TP/TBP100L6 | 40000 | 40000 |
| 8.8 | 1476 | 1.3 | 105.44 | B103 | TBS100LA6 | 22000 | 11867 |
| 8.8 | 1477 | 2.5 | 106.65 | B123 | TH/TBH100L6 | 30000 | 16626 |
| 8.8 | 1477 | 2.5 | 106.65 | B123 | TP/TBP100L6 | 30000 | 16626 |
| 8.8 | 1482 | 3.5 | 105.83 | B143 | TBS100LA6 | 40000 | 40000 |
| 8.7 | 1490 | 1.2 | 165.25 | B103 | TP/TBP90L4 | 22000 | 11938 |
| 8.7 | 1493 | 2.5 | 106.65 | B123 | TBS100LA6 | 30000 | 16670 |

# 5.1 B/BA MOTORIDUTTORE (50Hz)



## 1.50 kW

| n2 [rpm] | M2 [Nm] | fs | i | Riduttore | Motore | Fr2 D-S-P [N] | Fr2 C [N] |
|---|---|---|---|---|---|---|---|
| 8.7 | 1476 | 2.4 | 160.23 | B123 | TBS90LA4 | 30000 | 16681 |
| 8.6 | 1500 | 1.2 | 165.25 | B103 | TH/TBH90L4 | 22000 | 11960 |
| 8.5 | 1522 | 1.2 | 165.25 | B103 | TBS90LA4 | 22000 | 12005 |
| 8.4 | 1551 | 3.4 | 111.94 | B143 | TH/TBH100L6 | 40000 | 40000 |
| 8.4 | 1551 | 3.4 | 111.94 | B143 | TP/TBP100L6 | 40000 | 40000 |
| 8.3 | 1567 | 3.3 | 111.94 | B143 | TBS100LA6 | 40000 | 40000 |
| 8.2 | 1590 | 1.2 | 114.80 | B103 | TH/TBH100L6 | 22000 | 12098 |
| 8.2 | 1590 | 1.2 | 114.80 | B103 | TP/TBP100L6 | 22000 | 12098 |
| 8.1 | 1607 | 1.2 | 114.80 | B103 | TBS100LA6 | 22000 | 12132 |
| 7.9 | 1657 | 2.2 | 119.60 | B123 | TH/TBH100L6 | 30000 | 17105 |
| 7.9 | 1657 | 2.2 | 119.60 | B123 | TP/TBP100L6 | 30000 | 17105 |
| 7.9 | 1638 | 2.1 | 180.40 | B123 | TH/TBH90L4 | 30000 | 17121 |
| 7.9 | 1626 | 2.2 | 180.40 | B123 | TP/TBP90L4 | 30000 | 17091 |
| 7.8 | 1668 | 1.1 | 120.42 | B103 | TH/TBH100L6 | 22000 | 12247 |
| 7.8 | 1668 | 1.1 | 120.42 | B103 | TP/TBP100L6 | 22000 | 12247 |
| 7.8 | 1675 | 2.2 | 119.60 | B123 | TBS100LA6 | 30000 | 17150 |
| 7.8 | 1661 | 2.1 | 180.40 | B123 | TBS90LA4 | 30000 | 17180 |
| 7.7 | 1686 | 1.1 | 120.42 | B103 | TBS100LA6 | 22000 | 12281 |
| 7.5 | 1726 | 3.0 | 124.62 | B143 | TH/TBH100L6 | 40000 | 40000 |
| 7.5 | 1726 | 3.0 | 124.62 | B143 | TP/TBP100L6 | 40000 | 40000 |
| 7.5 | 1745 | 3.0 | 124.62 | B143 | TBS100LA6 | 40000 | 40000 |
| 7.2 | 1800 | 2.0 | 129.96 | B123 | TH/TBH100L6 | 30000 | 17453 |
| 7.2 | 1800 | 2.0 | 129.96 | B123 | TP/TBP100L6 | 30000 | 17453 |
| 7.2 | 1820 | 2.0 | 129.96 | B123 | TBS100LA6 | 30000 | 17497 |
| 7.1 | 1841 | 1.0 | 132.87 | B103 | TH/TBH100L6 | 22000 | 12555 |
| 7.1 | 1841 | 1.0 | 132.87 | B103 | TP/TBP100L6 | 22000 | 12555 |
| 7.0 | 1860 | 1.0 | 132.87 | B103 | TBS100LA6 | 22000 | 12589 |
| 6.9 | 1890 | 2.8 | 136.44 | B143 | TH/TBH100L6 | 40000 | 40000 |
| 6.9 | 1890 | 2.8 | 136.44 | B143 | TP/TBP100L6 | 40000 | 40000 |
| 6.8 | 1910 | 2.7 | 136.44 | B143 | TBS100LA6 | 40000 | 40000 |
| 6.5 | 2004 | 0.9 | 144.69 | B103 | TH/TBH100L6 | 22000 | 12822 |
| 6.5 | 2004 | 0.9 | 144.69 | B103 | TP/TBP100L6 | 22000 | 12822 |
| 6.5 | 2001 | 1.8 | 144.43 | B123 | TH/TBH100L6 | 30000 | 17892 |
| 6.5 | 2001 | 1.8 | 144.43 | B123 | TP/TBP100L6 | 30000 | 17892 |
| 6.4 | 2026 | 0.9 | 144.69 | B103 | TBS100LA6 | 22000 | 12855 |
| 6.4 | 2022 | 1.8 | 144.43 | B123 | TBS100LA6 | 30000 | 17936 |
| 6.3 | 2072 | 2.5 | 149.59 | B143 | TH/TBH100L6 | 40000 | 40000 |
| 6.3 | 2072 | 2.5 | 149.59 | B143 | TP/TBP100L6 | 40000 | 40000 |
| 6.2 | 2094 | 2.5 | 149.59 | B143 | TBS100LA6 | 40000 | 40000 |
| 5.9 | 2220 | 1.7 | 160.23 | B123 | TH/TBH100L6 | 30000 | 18320 |
| 5.9 | 2220 | 1.7 | 160.23 | B123 | TP/TBP100L6 | 30000 | 18320 |

# 5.1 B/BA MOTORIDUTTORE (50Hz)



## 1.50 kW

| n2 [rpm] | M2 [Nm] | fs | i | Riduttore | Motore | Fr2 D-S-P [N] | Fr2 C [N] |
|---|---|---|---|---|---|---|---|
| 5.8 | 2243 | 1.6 | 160.23 | B123 | TBS100LA6 | 30000 | 18363 |
| 5.6 | 2307 | 2.3 | 166.53 | B143 | TH/TBH100L6 | 40000 | 40000 |
| 5.6 | 2307 | 2.3 | 166.53 | B143 | TP/TBP100L6 | 40000 | 40000 |
| 5.6 | 2332 | 2.3 | 166.53 | B143 | TBS100LA6 | 40000 | 40000 |
| 5.2 | 2499 | 1.5 | 180.40 | B123 | TH/TBH100L6 | 30000 | 18800 |
| 5.2 | 2499 | 1.5 | 180.40 | B123 | TP/TBP100L6 | 30000 | 18800 |
| 5.2 | 2526 | 1.5 | 180.40 | B123 | TBS100LA6 | 30000 | 18843 |
| 5.0 | 2594 | 2.0 | 187.24 | B143 | TH/TBH100L6 | 40000 | 40000 |
| 5.0 | 2594 | 2.0 | 187.24 | B143 | TP/TBP100L6 | 40000 | 40000 |
| 5.0 | 2622 | 2.0 | 187.24 | B143 | TBS100LA6 | 40000 | 40000 |

## 1.85 kW

| n2 [rpm] | M2 [Nm] | fs | i | Riduttore | Motore | Fr2 D-S-P [N] | Fr2 C [N] |
|---|---|---|---|---|---|---|---|
| 176.9 | 95 | 1.7 | 7.91 | BA52 | TBS90LB4 | - | 1969 |
| 167.5 | 100 | 3.5 | 8.36 | BA72 | TBS90LB4 | 5079 | 2540 |
| 162.7 | 99 | 3.1 | 5.71 | B063 | TBS100LB6 | 9103 | 2601 |
| 148.0 | 113 | 1.4 | 9.46 | BA52 | TBS90LB4 | - | 2090 |
| 139.2 | 121 | 2.9 | 10.06 | BA72 | TBS90LB4 | 5403 | 2701 |
| 135.2 | 119 | 3.0 | 6.88 | B063 | TBS100LB6 | 9615 | 2747 |
| 127.0 | 126 | 2.9 | 7.32 | B063 | TBS100LB6 | 9792 | 2798 |
| 121.0 | 139 | 1.2 | 11.57 | BA52 | TBS90LB4 | - | 2235 |
| 119.1 | 135 | 3.9 | 7.81 | B083 | TBS100LB6 | 15480 | 4423 |
| 112.5 | 149 | 2.3 | 12.44 | BA72 | TBS90LB4 | 5800 | 2900 |
| 111.3 | 152 | 2.4 | 8.36 | BA72 | TBS100LB6 | 5821 | 2910 |
| 106.5 | 149 | 3.9 | 13.15 | B063 | TBS90LB4 | 10310 | 2946 |
| 101.5 | 158 | 3.1 | 9.16 | B063 | TBS100LB6 | 10444 | 2984 |
| 95.7 | 175 | 0.9 | 14.63 | BA52 | TBS90LB4 | - | 2416 |
| 93.9 | 179 | 2.4 | 14.91 | BA72 | TBS90LB4 | 6160 | 3080 |
| 92.4 | 183 | 2.0 | 10.06 | BA72 | TBS100LB6 | 6192 | 3096 |
| 92.3 | 172 | 3.4 | 15.18 | B063 | TBS90LB4 | 10738 | 3068 |
| 90.6 | 177 | 3.1 | 10.26 | B063 | TBS100LB6 | 10784 | 3081 |
| 88.6 | 181 | 3.8 | 10.49 | B083 | TBS100LB6 | 16934 | 4838 |
| 84.3 | 190 | 3.0 | 11.03 | B063 | TBS100LB6 | 11002 | 3144 |
| 82.3 | 193 | 3.1 | 17.00 | B063 | TBS90LB4 | 11084 | 3167 |
| 81.8 | 205 | 1.0 | 17.11 | BA52 | TBS90LB4 | - | 2546 |
| 80.3 | 200 | 3.9 | 11.59 | B083 | TBS100LB6 | 17445 | 4984 |
| 78.0 | 215 | 2.0 | 17.94 | BA72 | TBS90LB4 | 6552 | 3276 |
| 75.3 | 213 | 2.9 | 12.35 | B063 | TBS100LB6 | 11352 | 3244 |
| 74.7 | 227 | 1.6 | 12.44 | BA72 | TBS100LB6 | 6647 | 3323 |
| 70.7 | 227 | 2.7 | 13.15 | B063 | TBS100LB6 | 11547 | 3299 |

# 5.1 B/BA MOTORIDUTTORE (50Hz)



## 1.85 kW

| n2 [rpm] | M2 [Nm] | fs | i | Riduttore | Motore | Fr2 D-S-P [N] | Fr2 C [N] |
|---|---|---|---|---|---|---|---|
| 64.5 | 249 | 3.4 | 14.43 | B083 | TBS100LB6 | 18000 | 5319 |
| 63.1 | 266 | 1.6 | 22.19 | BA72 | TBS90LB4 | 7033 | 3517 |
| 62.5 | 254 | 2.4 | 22.39 | B063 | TBS90LB4 | 11945 | 3413 |
| 62.4 | 272 | 1.6 | 14.91 | BA72 | TBS100LB6 | 7059 | 3530 |
| 61.4 | 259 | 3.3 | 22.82 | B083 | TBS90LB4 | 18000 | 5399 |
| 61.3 | 262 | 2.4 | 15.18 | B063 | TBS100LB6 | 11997 | 3428 |
| 56.0 | 287 | 3.1 | 16.60 | B083 | TBS100LB6 | 18000 | 5541 |
| 54.7 | 294 | 2.1 | 17.00 | B063 | TBS100LB6 | 12000 | 3531 |
| 53.7 | 296 | 2.0 | 26.09 | B063 | TBS90LB4 | 12000 | 3552 |
| 52.4 | 303 | 2.8 | 26.71 | B083 | TBS90LB4 | 18000 | 5653 |
| 51.8 | 327 | 1.3 | 17.94 | BA72 | TBS100LB6 | 7509 | 3755 |
| 51.0 | 329 | 1.3 | 27.45 | BA72 | TBS90LB4 | 7550 | 3775 |
| 50.8 | 316 | 2.8 | 18.32 | B083 | TBS100LB6 | 18000 | 5701 |
| 49.9 | 318 | 1.9 | 28.03 | B063 | TBS90LB4 | 12000 | 3618 |
| 47.5 | 335 | 2.5 | 29.50 | B083 | TBS90LB4 | 18000 | 5816 |
| 44.0 | 361 | 2.4 | 31.80 | B083 | TBS90LB4 | 18000 | 5941 |
| 42.4 | 396 | 1.1 | 33.04 | BA72 | TBS90LB4 | 8031 | 4016 |
| 41.9 | 380 | 1.6 | 33.43 | B063 | TBS90LB4 | 12000 | 3780 |
| 41.9 | 405 | 1.1 | 22.19 | BA72 | TBS100LB6 | 8061 | 4030 |
| 41.5 | 387 | 1.6 | 22.39 | B063 | TBS100LB6 | 12000 | 3783 |
| 40.8 | 394 | 2.3 | 22.82 | B083 | TBS100LB6 | 18000 | 6067 |
| 40.6 | 392 | 2.2 | 34.49 | B083 | TBS90LB4 | 18000 | 6079 |
| 39.2 | 409 | 3.6 | 23.70 | B103 | TBS100LB6 | 22000 | 7656 |
| 36.3 | 438 | 1.4 | 38.58 | B063 | TBS90LB4 | 12000 | 3911 |
| 35.6 | 451 | 1.4 | 26.09 | B063 | TBS100LB6 | 12000 | 3922 |
| 35.4 | 450 | 1.9 | 39.60 | B083 | TBS90LB4 | 18000 | 6316 |
| 35.1 | 458 | 3.4 | 26.51 | B103 | TBS100LB6 | 22000 | 7918 |
| 34.8 | 461 | 1.9 | 26.71 | B083 | TBS100LB6 | 18000 | 6338 |
| 34.0 | 467 | 3.6 | 41.12 | B103 | TBS90LB4 | 22000 | 7992 |
| 33.2 | 484 | 1.3 | 28.03 | B063 | TBS100LB6 | 12000 | 3987 |
| 32.6 | 488 | 1.7 | 42.95 | B083 | TBS90LB4 | 18000 | 6458 |
| 32.4 | 491 | 1.2 | 43.22 | B063 | TBS90LB4 | 12000 | 4015 |
| 31.9 | 498 | 0.9 | 43.89 | BA73 | TBS90LB4 | 8828 | 4414 |
| 31.5 | 509 | 1.8 | 29.50 | B083 | TBS100LB6 | 18000 | 6511 |
| 31.4 | 507 | 3.4 | 44.61 | B103 | TBS90LB4 | 22000 | 8188 |
| 30.8 | 516 | 1.6 | 45.44 | B083 | TBS90LB4 | 18000 | 6557 |
| 30.4 | 528 | 3.2 | 30.55 | B103 | TBS100LB6 | 22000 | 8258 |
| 29.6 | 537 | 3.2 | 47.28 | B103 | TBS90LB4 | 22000 | 8330 |
| 29.2 | 549 | 1.6 | 31.80 | B083 | TBS100LB6 | 18000 | 6643 |
| 28.1 | 571 | 3.1 | 33.07 | B103 | TBS100LB6 | 22000 | 8452 |
| 27.9 | 571 | 3.0 | 50.24 | B103 | TBS90LB4 | 22000 | 8479 |

# 5.1 B/BA MOTORIDUTTORE (50Hz)



## 1.85 kW

| n2 [rpm] | M2 [Nm] | fs | i | Riduttore | Motore | Fr2 D-S-P [N] | Fr2 C [N] |
|---|---|---|---|---|---|---|---|
| 27.8 | 577 | 1.1 | 33.43 | B063 | TBS100LB6 | 12000 | 4143 |
| 27.6 | 577 | 1.0 | 50.81 | B063 | TBS90LB4 | 12000 | 4158 |
| 27.4 | 581 | 1.5 | 51.19 | B083 | TBS90LB4 | 18000 | 6768 |
| 27.0 | 596 | 1.5 | 34.49 | B083 | TBS100LB6 | 18000 | 6787 |
| 26.4 | 602 | 2.8 | 53.02 | B103 | TBS90LB4 | 22000 | 8614 |
| 25.9 | 619 | 2.9 | 35.87 | B103 | TBS100LB6 | 22000 | 8655 |
| 25.2 | 631 | 1.3 | 55.52 | B083 | TBS90LB4 | 18000 | 6914 |
| 24.6 | 647 | 0.9 | 56.93 | B063 | TBS90LB4 | 12000 | 4256 |
| 24.1 | 666 | 0.9 | 38.58 | B063 | TBS100LB6 | 12000 | 4264 |
| 23.9 | 664 | 2.6 | 58.50 | B103 | TBS90LB4 | 22000 | 8863 |
| 23.5 | 684 | 1.3 | 39.60 | B083 | TBS100LB6 | 18000 | 7033 |
| 23.4 | 681 | 1.2 | 59.96 | B083 | TBS90LB4 | 18000 | 7052 |
| 22.6 | 710 | 2.5 | 41.12 | B103 | TBS100LB6 | 22000 | 9003 |
| 22.0 | 724 | 1.2 | 63.74 | B083 | TBS90LB4 | 18000 | 7162 |
| 21.7 | 742 | 1.2 | 42.95 | B083 | TBS100LB6 | 18000 | 7179 |
| 21.6 | 737 | 2.3 | 64.89 | B103 | TBS90LB4 | 22000 | 9131 |
| 20.8 | 770 | 2.3 | 44.61 | B103 | TBS100LB6 | 22000 | 9215 |
| 20.5 | 785 | 1.1 | 45.44 | B083 | TBS100LB6 | 18000 | 7280 |
| 20.4 | 779 | 2.2 | 68.58 | B103 | TBS90LB4 | 22000 | 9276 |
| 20.2 | 785 | 1.1 | 69.14 | B083 | TBS90LB4 | 18000 | 7309 |
| 19.7 | 817 | 2.2 | 47.28 | B103 | TBS100LB6 | 22000 | 9368 |
| 19.2 | 826 | 2.1 | 72.76 | B103 | TBS90LB4 | 22000 | 9432 |
| 19.1 | 831 | 1.0 | 73.14 | B083 | TBS90LB4 | 18000 | 7410 |
| 18.7 | 860 | 3.9 | 49.80 | B123 | TBS100LB6 | 30000 | 13362 |
| 18.5 | 868 | 2.1 | 50.24 | B103 | TBS100LB6 | 22000 | 9529 |
| 18.2 | 884 | 1.0 | 51.19 | B083 | TBS100LB6 | 18000 | 7494 |
| 17.7 | 896 | 1.9 | 78.92 | B103 | TBS90LB4 | 22000 | 9650 |
| 17.5 | 916 | 1.9 | 53.02 | B103 | TBS100LB6 | 22000 | 9673 |
| 17.5 | 909 | 3.9 | 80.04 | B123 | TBS90LB4 | 30000 | 13614 |
| 17.3 | 917 | 0.9 | 80.76 | B083 | TBS90LB4 | 18000 | 7588 |
| 17.1 | 938 | 3.6 | 54.30 | B123 | TBS100LB6 | 30000 | 13679 |
| 16.7 | 959 | 0.9 | 55.52 | B083 | TBS100LB6 | 18000 | 7639 |
| 16.7 | 950 | 1.9 | 83.66 | B103 | TBS90LB4 | 22000 | 9807 |
| 15.9 | 1010 | 1.8 | 58.50 | B103 | TBS100LB6 | 22000 | 9939 |
| 15.7 | 1025 | 3.3 | 59.36 | B123 | TBS100LB6 | 30000 | 14009 |
| 15.2 | 1048 | 1.7 | 92.31 | B103 | TBS90LB4 | 22000 | 10076 |
| 14.9 | 1081 | 3.2 | 62.59 | B123 | TBS100LB6 | 30000 | 14207 |
| 14.3 | 1120 | 1.6 | 64.89 | B103 | TBS100LB6 | 22000 | 10223 |
| 13.6 | 1184 | 1.5 | 68.58 | B103 | TBS100LB6 | 22000 | 10376 |
| 13.4 | 1199 | 2.9 | 69.43 | B123 | TBS100LB6 | 30000 | 14596 |
| 13.3 | 1198 | 1.5 | 105.44 | B103 | TBS90LB4 | 22000 | 10445 |

# 5.1 B/BA MOTORIDUTTORE (50Hz)



## 1.85 kW

| n2 [rpm] | M2 [Nm] | fs | i | Riduttore | Motore | Fr2 D-S-P [N] | Fr2 C [N] |
|---|---|---|---|---|---|---|---|
| 13.1 | 1211 | 2.9 | 106.65 | B123 | TBS90LB4 | 30000 | 14688 |
| 12.8 | 1256 | 1.4 | 72.76 | B103 | TBS100LB6 | 22000 | 10540 |
| 12.5 | 1285 | 2.9 | 74.42 | B123 | TBS100LB6 | 30000 | 14857 |
| 12.2 | 1304 | 1.4 | 114.80 | B103 | TBS90LB4 | 22000 | 10682 |
| 12.1 | 1332 | 3.9 | 77.12 | B143 | TBS100LB6 | 40000 | 40000 |
| 11.8 | 1363 | 1.3 | 78.92 | B103 | TBS100LB6 | 22000 | 10768 |
| 11.7 | 1358 | 2.6 | 119.60 | B123 | TBS90LB4 | 30000 | 15122 |
| 11.6 | 1368 | 1.3 | 120.42 | B103 | TBS90LB4 | 22000 | 10817 |
| 11.6 | 1382 | 2.7 | 80.04 | B123 | TBS100LB6 | 30000 | 15132 |
| 11.1 | 1445 | 1.3 | 83.66 | B103 | TBS100LB6 | 22000 | 10931 |
| 10.9 | 1477 | 3.6 | 85.54 | B143 | TBS100LB6 | 40000 | 40000 |
| 10.8 | 1476 | 2.4 | 129.96 | B123 | TBS90LB4 | 30000 | 15438 |
| 10.5 | 1509 | 1.2 | 132.87 | B103 | TBS90LB4 | 22000 | 11095 |
| 10.3 | 1552 | 2.4 | 89.87 | B123 | TBS100LB6 | 30000 | 15570 |
| 10.1 | 1594 | 1.2 | 92.31 | B103 | TBS100LB6 | 22000 | 11209 |
| 9.9 | 1625 | 3.2 | 94.13 | B143 | TBS100LB6 | 40000 | 40000 |
| 9.7 | 1643 | 1.1 | 144.69 | B103 | TBS90LB4 | 22000 | 11336 |
| 9.7 | 1640 | 2.1 | 144.43 | B123 | TBS90LB4 | 30000 | 15838 |
| 9.3 | 1722 | 2.1 | 99.70 | B123 | TBS100LB6 | 30000 | 15960 |
| 8.8 | 1821 | 1.0 | 105.44 | B103 | TBS100LB6 | 22000 | 11584 |
| 8.8 | 1828 | 2.9 | 105.83 | B143 | TBS100LB6 | 40000 | 40000 |
| 8.7 | 1842 | 2.0 | 106.65 | B123 | TBS100LB6 | 30000 | 16213 |
| 8.7 | 1820 | 1.9 | 160.23 | B123 | TBS90LB4 | 30000 | 16229 |
| 8.5 | 1877 | 1.0 | 165.25 | B103 | TBS90LB4 | 22000 | 11713 |
| 8.3 | 1933 | 2.7 | 111.94 | B143 | TBS100LB6 | 40000 | 40000 |
| 8.1 | 1982 | 1.0 | 114.80 | B103 | TBS100LB6 | 22000 | 11823 |
| 7.8 | 2065 | 1.8 | 119.60 | B123 | TBS100LB6 | 30000 | 16637 |
| 7.8 | 2049 | 1.7 | 180.40 | B123 | TBS90LB4 | 30000 | 16671 |
| 7.7 | 2080 | 0.9 | 120.42 | B103 | TBS100LB6 | 22000 | 11958 |
| 7.5 | 2152 | 2.4 | 124.62 | B143 | TBS100LB6 | 40000 | 40000 |
| 7.2 | 2244 | 1.6 | 129.96 | B123 | TBS100LB6 | 30000 | 16940 |
| 6.8 | 2356 | 2.2 | 136.44 | B143 | TBS100LB6 | 40000 | 40000 |
| 6.4 | 2494 | 1.5 | 144.43 | B123 | TBS100LB6 | 30000 | 17317 |
| 6.2 | 2583 | 2.0 | 149.59 | B143 | TBS100LB6 | 40000 | 40000 |
| 5.8 | 2767 | 1.3 | 160.23 | B123 | TBS100LB6 | 30000 | 17676 |
| 5.6 | 2876 | 1.8 | 166.53 | B143 | TBS100LB6 | 40000 | 40000 |
| 5.2 | 3115 | 1.2 | 180.40 | B123 | TBS100LB6 | 30000 | 18069 |
| 5.0 | 3233 | 1.6 | 187.24 | B143 | TBS100LB6 | 40000 | 40000 |

# 5.1 B/BA MOTORIDUTTORE (50Hz)



## 2.20 kW

| n2 [rpm] | M2 [Nm] | fs | i | Riduttore | Motore | Fr2 D-S-P [N] | Fr2 C [N] |
|---|---|---|---|---|---|---|---|
| 364.0 | 53 | 2.3 | 7.91 | BA52 | TH/TBH90L2 | - | 1548 |
| 364.0 | 53 | 2.3 | 7.91 | BA52 | TP/TBP90L2 | - | 1548 |
| 361.5 | 53 | 2.3 | 7.91 | BA52 | TBS90L2 | - | 1552 |
| 304.4 | 63 | 1.9 | 9.46 | BA52 | TH/TBH90L2 | - | 1643 |
| 304.4 | 63 | 1.9 | 9.46 | BA52 | TP/TBP90L2 | - | 1643 |
| 302.3 | 64 | 1.9 | 9.46 | BA52 | TBS90L2 | - | 1647 |
| 286.3 | 67 | 3.9 | 10.06 | BA72 | TH/TBH90L2 | 4248 | 2124 |
| 286.3 | 67 | 3.9 | 10.06 | BA72 | TP/TBP90L2 | 4248 | 2124 |
| 284.3 | 68 | 3.9 | 10.06 | BA72 | TBS90L2 | 4258 | 2129 |
| 255.5 | 74 | 3.9 | 5.71 | B063 | TP/TBP112MR4 | 7894 | 2256 |
| 252.0 | 75 | 3.9 | 5.71 | B063 | TP/TBP100LA4 | 7927 | 2265 |
| 250.2 | 76 | 3.8 | 5.71 | B063 | TH/TBH100LA4 | 7944 | 2270 |
| 248.8 | 77 | 1.6 | 11.57 | BA52 | TH/TBH90L2 | - | 1757 |
| 248.8 | 77 | 1.6 | 11.57 | BA52 | TP/TBP90L2 | - | 1757 |
| 248.5 | 76 | 3.8 | 5.71 | B063 | TBS100LA4 | 7961 | 2274 |
| 247.1 | 78 | 1.5 | 11.57 | BA52 | TBS90L2 | - | 1761 |
| 231.5 | 83 | 3.2 | 12.44 | BA72 | TH/TBH90L2 | 4560 | 2280 |
| 231.5 | 83 | 3.2 | 12.44 | BA72 | TP/TBP90L2 | 4560 | 2280 |
| 229.9 | 84 | 3.1 | 12.44 | BA72 | TBS90L2 | 4571 | 2285 |
| 212.2 | 89 | 3.8 | 6.88 | B063 | TP/TBP112MR4 | 8346 | 2384 |
| 209.3 | 90 | 3.8 | 6.88 | B063 | TP/TBP100LA4 | 8380 | 2394 |
| 207.9 | 91 | 3.7 | 6.88 | B063 | TH/TBH100LA4 | 8397 | 2399 |
| 206.4 | 92 | 3.7 | 6.88 | B063 | TBS100LA4 | 8415 | 2404 |
| 199.4 | 95 | 3.7 | 7.32 | B063 | TP/TBP112MR4 | 8502 | 2429 |
| 196.9 | 98 | 1.2 | 14.63 | BA52 | TH/TBH90L2 | - | 1900 |
| 196.9 | 98 | 1.2 | 14.63 | BA52 | TP/TBP90L2 | - | 1900 |
| 196.6 | 96 | 3.6 | 7.32 | B063 | TP/TBP100LA4 | 8537 | 2439 |
| 195.5 | 98 | 1.2 | 14.63 | BA52 | TBS90L2 | - | 1904 |
| 195.3 | 97 | 3.6 | 7.32 | B063 | TH/TBH100LA4 | 8554 | 2444 |
| 193.9 | 98 | 3.6 | 7.32 | B063 | TBS100LA4 | 8572 | 2449 |
| 193.2 | 100 | 3.2 | 14.91 | BA72 | TH/TBH90L2 | 4843 | 2422 |
| 193.2 | 100 | 3.2 | 14.91 | BA72 | TP/TBP90L2 | 4843 | 2422 |
| 191.9 | 100 | 3.1 | 14.91 | BA72 | TBS90L2 | 4854 | 2427 |
| 174.7 | 114 | 3.1 | 8.36 | BA72 | TP/TBP112MR4 | 5008 | 2504 |
| 172.3 | 116 | 3.0 | 8.36 | BA72 | TP/TBP100LA4 | 5032 | 2516 |
| 171.1 | 117 | 3.0 | 8.36 | BA72 | TH/TBH100LA4 | 5043 | 2522 |
| 169.9 | 117 | 3.0 | 8.36 | BA72 | TBS100LA4 | 5055 | 2528 |
| 168.3 | 114 | 1.3 | 17.11 | BA52 | TH/TBH90L2 | - | 2002 |
| 168.3 | 114 | 1.3 | 17.11 | BA52 | TP/TBP90L2 | - | 2002 |
| 168.0 | 114 | 2.7 | 5.71 | B063 | TH/TBH112M6 | 8936 | 2553 |
| 168.0 | 114 | 2.7 | 5.71 | B063 | TP/TBP112M6 | 8936 | 2553 |

# 5.1 B/BA MOTORIDUTTORE (50Hz)



## 2.20 kW

| n2 [rpm] | M2 [Nm] | fs | i | Riduttore | Motore | Fr2 D-S-P [N] | Fr2 C [N] |
|---|---|---|---|---|---|---|---|
| 167.1 | 115 | 1.3 | 17.11 | BA52 | TBS90L2 | - | 2006 |
| 162.7 | 117 | 2.6 | 5.71 | B063 | TBS112MA6 | 9019 | 2577 |
| 160.5 | 120 | 2.6 | 17.94 | BA72 | TH/TBH90L2 | 5152 | 2576 |
| 160.5 | 120 | 2.6 | 17.94 | BA72 | TP/TBP90L2 | 5152 | 2576 |
| 159.4 | 119 | 3.9 | 9.16 | B063 | TP/TBP112MR4 | 9079 | 2594 |
| 159.4 | 121 | 2.6 | 17.94 | BA72 | TBS90L2 | 5164 | 2582 |
| 157.2 | 120 | 3.8 | 9.16 | B063 | TP/TBP100LA4 | 9116 | 2604 |
| 156.1 | 121 | 3.8 | 9.16 | B063 | TH/TBH100LA4 | 9134 | 2610 |
| 155.0 | 122 | 3.8 | 9.16 | B063 | TBS100LA4 | 9153 | 2615 |
| 145.1 | 138 | 2.5 | 10.06 | BA72 | TP/TBP112MR4 | 5328 | 2664 |
| 143.1 | 139 | 2.5 | 10.06 | BA72 | TP/TBP100LA4 | 5352 | 2676 |
| 142.3 | 133 | 3.9 | 10.26 | B063 | TP/TBP112MR4 | 9382 | 2681 |
| 142.2 | 140 | 2.5 | 10.06 | BA72 | TH/TBH100LA4 | 5365 | 2682 |
| 141.2 | 141 | 2.5 | 10.06 | BA72 | TBS100LA4 | 5377 | 2689 |
| 140.8 | 137 | 1.1 | 20.46 | BA52 | TH/TBH90L2 | - | 2125 |
| 140.8 | 137 | 1.1 | 20.46 | BA52 | TP/TBP90L2 | - | 2125 |
| 140.3 | 135 | 3.9 | 10.26 | B063 | TP/TBP100LA4 | 9419 | 2691 |
| 139.8 | 138 | 1.1 | 20.46 | BA52 | TBS90L2 | - | 2130 |
| 139.5 | 137 | 2.6 | 6.88 | B063 | TH/TBH112M6 | 9428 | 2694 |
| 139.5 | 137 | 2.6 | 6.88 | B063 | TP/TBP112M6 | 9428 | 2694 |
| 139.3 | 136 | 3.8 | 10.26 | B063 | TH/TBH100LA4 | 9438 | 2697 |
| 138.4 | 137 | 3.8 | 10.26 | B063 | TBS100LA4 | 9457 | 2702 |
| 135.2 | 141 | 2.5 | 6.88 | B063 | TBS112MA6 | 9514 | 2718 |
| 132.4 | 143 | 3.8 | 11.03 | B063 | TP/TBP112MR4 | 9577 | 2736 |
| 131.1 | 146 | 2.5 | 7.32 | B063 | TH/TBH112M6 | 9597 | 2742 |
| 131.1 | 146 | 2.5 | 7.32 | B063 | TP/TBP112M6 | 9597 | 2742 |
| 130.6 | 145 | 3.7 | 11.03 | B063 | TP/TBP100LA4 | 9615 | 2747 |
| 129.8 | 148 | 2.1 | 22.19 | BA72 | TH/TBH90L2 | 5530 | 2765 |
| 129.8 | 148 | 2.1 | 22.19 | BA72 | TP/TBP90L2 | 5530 | 2765 |
| 129.7 | 146 | 3.7 | 11.03 | B063 | TH/TBH100LA4 | 9634 | 2752 |
| 128.9 | 149 | 2.1 | 22.19 | BA72 | TBS90L2 | 5543 | 2772 |
| 128.8 | 147 | 3.7 | 11.03 | B063 | TBS100LA4 | 9653 | 2758 |
| 128.6 | 142 | 3.2 | 22.39 | B063 | TH/TBH90L2 | 9680 | 2766 |
| 128.6 | 142 | 3.2 | 22.39 | B063 | TP/TBP90L2 | 9680 | 2766 |
| 127.7 | 143 | 3.1 | 22.39 | B063 | TBS90L2 | 9699 | 2771 |
| 127.0 | 150 | 2.4 | 7.32 | B063 | TBS112MA6 | 9684 | 2767 |
| 122.9 | 155 | 3.4 | 7.81 | B083 | TH/TBH112M6 | 15230 | 4352 |
| 122.9 | 155 | 3.4 | 7.81 | B083 | TP/TBP112M6 | 15230 | 4352 |
| 119.1 | 160 | 3.3 | 7.81 | B083 | TBS112MA6 | 15377 | 4393 |
| 118.2 | 160 | 3.6 | 12.35 | B063 | TP/TBP112MR4 | 9890 | 2826 |
| 117.3 | 170 | 2.1 | 12.44 | BA72 | TP/TBP112MR4 | 5719 | 2860 |

# 5.1 B/BA MOTORIDUTTORE (50Hz)



## 2.20 kW

| n2 [rpm] | M2 [Nm] | fs | i | Riduttore | Motore | Fr2 D-S-P [N] | Fr2 C [N] |
|---|---|---|---|---|---|---|---|
| 116.6 | 162 | 3.6 | 12.35 | B063 | TP/TBP100LA4 | 9928 | 2837 |
| 115.7 | 163 | 3.6 | 12.35 | B063 | TH/TBH100LA4 | 9948 | 2842 |
| 115.7 | 172 | 2.0 | 12.44 | BA72 | TP/TBP100LA4 | 5745 | 2873 |
| 114.9 | 165 | 3.5 | 12.35 | B063 | TBS100LA4 | 9967 | 2848 |
| 114.9 | 174 | 2.0 | 12.44 | BA72 | TH/TBH100LA4 | 5759 | 2879 |
| 114.9 | 175 | 2.1 | 8.36 | BA72 | TH/TBH112M6 | 5760 | 2880 |
| 114.9 | 175 | 2.1 | 8.36 | BA72 | TP/TBP112M6 | 5760 | 2880 |
| 114.1 | 175 | 2.0 | 12.44 | BA72 | TBS100LA4 | 5772 | 2886 |
| 111.3 | 172 | 3.7 | 8.62 | B083 | TH/TBH112M6 | 15692 | 4483 |
| 111.3 | 172 | 3.7 | 8.62 | B083 | TP/TBP112M6 | 15692 | 4483 |
| 111.3 | 181 | 2.0 | 8.36 | BA72 | TBS112MA6 | 5821 | 2910 |
| 111.0 | 170 | 3.5 | 13.15 | B063 | TP/TBP112MR4 | 10065 | 2876 |
| 110.4 | 165 | 2.7 | 26.09 | B063 | TH/TBH90L2 | 10108 | 2888 |
| 110.4 | 165 | 2.7 | 26.09 | B063 | TP/TBP90L2 | 10108 | 2888 |
| 109.6 | 166 | 2.7 | 26.09 | B063 | TBS90L2 | 10127 | 2894 |
| 109.5 | 173 | 3.4 | 13.15 | B063 | TP/TBP100LA4 | 10103 | 2887 |
| 108.7 | 174 | 3.4 | 13.15 | B063 | TH/TBH100LA4 | 10123 | 2892 |
| 108.0 | 175 | 3.4 | 13.15 | B063 | TBS100LA4 | 10143 | 2898 |
| 107.9 | 177 | 3.6 | 8.62 | B083 | TBS112MA6 | 15842 | 4526 |
| 107.8 | 169 | 3.8 | 26.71 | B083 | TH/TBH90L2 | 15876 | 4536 |
| 107.8 | 169 | 3.8 | 26.71 | B083 | TP/TBP90L2 | 15876 | 4536 |
| 107.1 | 170 | 3.7 | 26.71 | B083 | TBS90L2 | 15910 | 4546 |
| 104.9 | 184 | 1.7 | 27.45 | BA72 | TH/TBH90L2 | 5936 | 2968 |
| 104.9 | 184 | 1.7 | 27.45 | BA72 | TP/TBP90L2 | 5936 | 2968 |
| 104.8 | 182 | 2.7 | 9.16 | B063 | TH/TBH112M6 | 10219 | 2920 |
| 104.8 | 182 | 2.7 | 9.16 | B063 | TP/TBP112M6 | 10219 | 2920 |
| 104.2 | 185 | 1.7 | 27.45 | BA72 | TBS90L2 | 5950 | 2975 |
| 102.7 | 178 | 2.5 | 28.03 | B063 | TH/TBH90L2 | 10312 | 2946 |
| 102.7 | 178 | 2.5 | 28.03 | B063 | TP/TBP90L2 | 10312 | 2946 |
| 102.0 | 179 | 2.5 | 28.03 | B063 | TBS90L2 | 10332 | 2952 |
| 101.5 | 188 | 2.6 | 9.16 | B063 | TBS112MA6 | 10309 | 2945 |
| 97.9 | 204 | 2.1 | 14.91 | BA72 | TP/TBP112MR4 | 6074 | 3037 |
| 97.6 | 187 | 3.4 | 29.50 | B083 | TH/TBH90L2 | 16355 | 4673 |
| 97.6 | 187 | 3.4 | 29.50 | B083 | TP/TBP90L2 | 16355 | 4673 |
| 97.0 | 188 | 3.4 | 29.50 | B083 | TBS90L2 | 16389 | 4683 |
| 96.6 | 207 | 2.0 | 14.91 | BA72 | TP/TBP100LA4 | 6102 | 3051 |
| 96.2 | 197 | 3.0 | 15.18 | B063 | TP/TBP112MR4 | 10470 | 2992 |
| 95.9 | 208 | 2.0 | 14.91 | BA72 | TH/TBH100LA4 | 6116 | 3058 |
| 95.4 | 211 | 1.7 | 10.06 | BA72 | TH/TBH112M6 | 6127 | 3063 |
| 95.4 | 211 | 1.7 | 10.06 | BA72 | TP/TBP112M6 | 6127 | 3063 |
| 95.3 | 210 | 2.0 | 14.91 | BA72 | TBS100LA4 | 6131 | 3065 |

# 5.1 B/BA MOTORIDUTTORE (50Hz)



## 2.20 kW

| n2 [rpm] | M2 [Nm] | fs | i | Riduttore | Motore | Fr2 D-S-P [N] | Fr2 C [N] |
|---|---|---|---|---|---|---|---|
| 94.9 | 199 | 3.0 | 15.18 | B063 | TP/TBP100LA4 | 10510 | 3003 |
| 94.2 | 201 | 2.9 | 15.18 | B063 | TH/TBH100LA4 | 10530 | 3008 |
| 93.6 | 202 | 2.9 | 15.18 | B063 | TBS100LA4 | 10550 | 3014 |
| 93.5 | 204 | 2.7 | 10.26 | B063 | TH/TBH112M6 | 10542 | 3012 |
| 93.5 | 204 | 2.7 | 10.26 | B063 | TP/TBP112M6 | 10542 | 3012 |
| 92.4 | 218 | 1.7 | 10.06 | BA72 | TBS112MA6 | 6192 | 3096 |
| 91.5 | 209 | 3.3 | 10.49 | B083 | TH/TBH112M6 | 16639 | 4754 |
| 91.5 | 209 | 3.3 | 10.49 | B083 | TP/TBP112M6 | 16639 | 4754 |
| 90.6 | 211 | 2.6 | 10.26 | B063 | TBS112MA6 | 10633 | 3038 |
| 90.6 | 201 | 3.2 | 31.80 | B083 | TH/TBH90L2 | 16726 | 4779 |
| 90.6 | 201 | 3.2 | 31.80 | B083 | TP/TBP90L2 | 16726 | 4779 |
| 89.9 | 203 | 3.1 | 31.80 | B083 | TBS90L2 | 16760 | 4789 |
| 88.6 | 216 | 3.2 | 10.49 | B083 | TBS112MA6 | 16795 | 4799 |
| 88.0 | 215 | 4.0 | 16.60 | B083 | TP/TBP112MR4 | 16840 | 4812 |
| 87.2 | 221 | 1.4 | 33.04 | BA72 | TH/TBH90L2 | 6315 | 3157 |
| 87.2 | 221 | 1.4 | 33.04 | BA72 | TP/TBP90L2 | 6315 | 3157 |
| 87.1 | 219 | 2.6 | 11.03 | B063 | TH/TBH112M6 | 10748 | 3071 |
| 87.1 | 219 | 2.6 | 11.03 | B063 | TP/TBP112M6 | 10748 | 3071 |
| 86.8 | 218 | 3.9 | 16.60 | B083 | TP/TBP100LA4 | 16909 | 4831 |
| 86.6 | 223 | 1.4 | 33.04 | BA72 | TBS90L2 | 6329 | 3165 |
| 86.2 | 219 | 3.9 | 16.60 | B083 | TH/TBH100LA4 | 16944 | 4841 |
| 86.1 | 212 | 2.1 | 33.43 | B063 | TH/TBH90L2 | 10823 | 3092 |
| 86.1 | 212 | 2.1 | 33.43 | B063 | TP/TBP90L2 | 10823 | 3092 |
| 85.9 | 220 | 2.7 | 17.00 | B063 | TP/TBP112MR4 | 10798 | 3085 |
| 85.6 | 221 | 3.8 | 16.60 | B083 | TBS100LA4 | 16979 | 4851 |
| 85.5 | 213 | 2.1 | 33.43 | B063 | TBS90L2 | 10844 | 3098 |
| 84.7 | 223 | 2.7 | 17.00 | B063 | TP/TBP100LA4 | 10838 | 3096 |
| 84.3 | 226 | 2.5 | 11.03 | B063 | TBS112MA6 | 10840 | 3097 |
| 84.1 | 225 | 2.7 | 17.00 | B063 | TH/TBH100LA4 | 10858 | 3102 |
| 83.5 | 226 | 2.7 | 17.00 | B063 | TBS100LA4 | 10878 | 3108 |
| 83.5 | 219 | 2.9 | 34.49 | B083 | TH/TBH90L2 | 17134 | 4895 |
| 83.5 | 219 | 2.9 | 34.49 | B083 | TP/TBP90L2 | 17134 | 4895 |
| 82.9 | 220 | 2.9 | 34.49 | B083 | TBS90L2 | 17169 | 4905 |
| 82.9 | 231 | 3.4 | 11.59 | B083 | TH/TBH112M6 | 17132 | 4895 |
| 82.9 | 231 | 3.4 | 11.59 | B083 | TP/TBP112M6 | 17132 | 4895 |
| 81.4 | 245 | 1.7 | 17.94 | BA72 | TP/TBP112MR4 | 6461 | 3231 |
| 80.3 | 238 | 3.3 | 11.59 | B083 | TBS112MA6 | 17292 | 4941 |
| 80.3 | 249 | 1.7 | 17.94 | BA72 | TP/TBP100LA4 | 6491 | 3246 |
| 79.7 | 237 | 3.6 | 18.32 | B083 | TP/TBP112MR4 | 17339 | 4954 |
| 79.7 | 250 | 1.7 | 17.94 | BA72 | TH/TBH100LA4 | 6506 | 3253 |
| 79.1 | 252 | 1.7 | 17.94 | BA72 | TBS100LA4 | 6521 | 3261 |

# 5.1 B/BA MOTORIDUTTORE (50Hz)



## 2.20 kW

| n2 [rpm] | M2 [Nm] | fs | i | Riduttore | Motore | Fr2 D-S-P [N] | Fr2 C [N] |
|---|---|---|---|---|---|---|---|
| 78.6 | 241 | 3.5 | 18.32 | B083 | TP/TBP100LA4 | 17409 | 4974 |
| 78.0 | 242 | 3.5 | 18.32 | B083 | TH/TBH100LA4 | 17444 | 4984 |
| 77.7 | 246 | 2.5 | 12.35 | B063 | TH/TBH112M6 | 11078 | 3165 |
| 77.7 | 246 | 2.5 | 12.35 | B063 | TP/TBP112M6 | 11078 | 3165 |
| 77.5 | 244 | 3.5 | 18.32 | B083 | TBS100LA4 | 17480 | 4994 |
| 77.2 | 261 | 1.4 | 12.44 | BA72 | TH/TBH112M6 | 6577 | 3288 |
| 77.2 | 261 | 1.4 | 12.44 | BA72 | TP/TBP112M6 | 6577 | 3288 |
| 75.3 | 254 | 2.4 | 12.35 | B063 | TBS112MA6 | 11170 | 3191 |
| 74.7 | 244 | 1.8 | 38.58 | B063 | TH/TBH90L2 | 11246 | 3213 |
| 74.7 | 244 | 1.8 | 38.58 | B063 | TP/TBP90L2 | 11246 | 3213 |
| 74.7 | 270 | 1.4 | 12.44 | BA72 | TBS112MA6 | 6647 | 3323 |
| 74.1 | 246 | 1.8 | 38.58 | B063 | TBS90L2 | 11266 | 3219 |
| 73.0 | 262 | 2.4 | 13.15 | B063 | TH/TBH112M6 | 11260 | 3217 |
| 73.0 | 262 | 2.4 | 13.15 | B063 | TP/TBP112M6 | 11260 | 3217 |
| 72.7 | 251 | 2.5 | 39.60 | B083 | TH/TBH90L2 | 17843 | 5098 |
| 72.7 | 251 | 2.5 | 39.60 | B083 | TP/TBP90L2 | 17843 | 5098 |
| 72.2 | 253 | 2.5 | 39.60 | B083 | TBS90L2 | 17879 | 5108 |
| 70.7 | 270 | 2.3 | 13.15 | B063 | TBS112MA6 | 11353 | 3244 |
| 70.5 | 273 | 1.1 | 40.87 | BA72 | TH/TBH90L2 | 6779 | 3389 |
| 70.5 | 273 | 1.1 | 40.87 | BA72 | TP/TBP90L2 | 6779 | 3389 |
| 70.0 | 275 | 1.1 | 40.87 | BA72 | TBS90L2 | 6794 | 3397 |
| 67.1 | 272 | 2.3 | 42.95 | B083 | TH/TBH90L2 | 18000 | 5220 |
| 67.1 | 272 | 2.3 | 42.95 | B083 | TP/TBP90L2 | 18000 | 5220 |
| 66.6 | 274 | 1.6 | 43.22 | B063 | TH/TBH90L2 | 11585 | 3310 |
| 66.6 | 274 | 1.6 | 43.22 | B063 | TP/TBP90L2 | 11585 | 3310 |
| 66.6 | 274 | 2.3 | 42.95 | B083 | TBS90L2 | 18000 | 5230 |
| 66.5 | 287 | 3.0 | 14.43 | B083 | TH/TBH112M6 | 18000 | 5217 |
| 66.5 | 287 | 3.0 | 14.43 | B083 | TP/TBP112M6 | 18000 | 5217 |
| 66.2 | 276 | 1.6 | 43.22 | B063 | TBS90L2 | 11606 | 3316 |
| 65.8 | 303 | 1.4 | 22.19 | BA72 | TP/TBP112MR4 | 6936 | 3468 |
| 65.6 | 278 | 1.2 | 43.89 | BA73 | TH/TBH90L2 | 6942 | 3471 |
| 65.6 | 278 | 1.2 | 43.89 | BA73 | TP/TBP90L2 | 6942 | 3471 |
| 65.2 | 290 | 2.1 | 22.39 | B063 | TP/TBP112MR4 | 11604 | 3316 |
| 65.2 | 280 | 1.2 | 43.89 | BA73 | TBS90L2 | 6958 | 3479 |
| 64.9 | 308 | 1.4 | 22.19 | BA72 | TP/TBP100LA4 | 6968 | 3484 |
| 64.5 | 296 | 2.9 | 14.43 | B083 | TBS112MA6 | 18000 | 5265 |
| 64.4 | 313 | 1.4 | 14.91 | BA72 | TH/TBH112M6 | 6985 | 3493 |
| 64.4 | 313 | 1.4 | 14.91 | BA72 | TP/TBP112M6 | 6985 | 3493 |
| 64.4 | 310 | 1.4 | 22.19 | BA72 | TH/TBH100LA4 | 6984 | 3492 |
| 64.3 | 294 | 2.0 | 22.39 | B063 | TP/TBP100LA4 | 11645 | 3327 |
| 64.0 | 296 | 2.9 | 22.82 | B083 | TP/TBP112MR4 | 18000 | 5279 |

# 5.1 B/BA MOTORIDUTTORE (50Hz)



## 2.20 kW

| n2 [rpm] | M2 [Nm] | fs | i | Riduttore | Motore | Fr2 D-S-P [N] | Fr2 C [N] |
|---|---|---|---|---|---|---|---|
| 64.0 | 312 | 1.3 | 22.19 | BA72 | TBS100LA4 | 7000 | 3500 |
| 63.9 | 296 | 2.0 | 22.39 | B063 | TH/TBH100LA4 | 11666 | 3333 |
| 63.4 | 298 | 2.0 | 22.39 | B063 | TBS100LA4 | 11686 | 3339 |
| 63.4 | 288 | 2.2 | 45.44 | B083 | TH/TBH90L2 | 18000 | 5305 |
| 63.4 | 288 | 2.2 | 45.44 | B083 | TP/TBP90L2 | 18000 | 5305 |
| 63.3 | 302 | 2.1 | 15.18 | B063 | TH/TBH112M6 | 11680 | 3337 |
| 63.3 | 302 | 2.1 | 15.18 | B063 | TP/TBP112M6 | 11680 | 3337 |
| 63.1 | 300 | 2.8 | 22.82 | B083 | TP/TBP100LA4 | 18000 | 5300 |
| 62.9 | 290 | 2.2 | 45.44 | B083 | TBS90L2 | 18000 | 5316 |
| 62.7 | 302 | 2.8 | 22.82 | B083 | TH/TBH100LA4 | 18000 | 5311 |
| 62.4 | 323 | 1.4 | 14.91 | BA72 | TBS112MA6 | 7059 | 3530 |
| 62.2 | 304 | 2.8 | 22.82 | B083 | TBS100LA4 | 18000 | 5321 |
| 61.3 | 312 | 2.0 | 15.18 | B063 | TBS112MA6 | 11773 | 3364 |
| 57.8 | 330 | 2.7 | 16.60 | B083 | TH/TBH112M6 | 18000 | 5429 |
| 57.8 | 330 | 2.7 | 16.60 | B083 | TP/TBP112M6 | 18000 | 5429 |
| 56.9 | 321 | 4.0 | 50.24 | B103 | TBS90L2 | 22000 | 6806 |
| 56.7 | 322 | 1.4 | 50.81 | B063 | TH/TBH90L2 | 12000 | 3449 |
| 56.7 | 322 | 1.4 | 50.81 | B063 | TP/TBP90L2 | 12000 | 3449 |
| 56.5 | 338 | 1.9 | 17.00 | B063 | TH/TBH112M6 | 12000 | 3433 |
| 56.5 | 338 | 1.9 | 17.00 | B063 | TP/TBP112M6 | 12000 | 3433 |
| 56.3 | 324 | 1.4 | 50.81 | B063 | TBS90L2 | 12000 | 3455 |
| 56.3 | 324 | 2.0 | 51.19 | B083 | TH/TBH90L2 | 18000 | 5489 |
| 56.3 | 324 | 2.0 | 51.19 | B083 | TP/TBP90L2 | 18000 | 5489 |
| 56.0 | 338 | 1.8 | 26.09 | B063 | TP/TBP112MR4 | 12000 | 3445 |
| 56.0 | 341 | 2.6 | 16.60 | B083 | TBS112MA6 | 18000 | 5478 |
| 55.9 | 327 | 2.0 | 51.19 | B083 | TBS90L2 | 18000 | 5500 |
| 55.2 | 343 | 1.8 | 26.09 | B063 | TP/TBP100LA4 | 12000 | 3456 |
| 54.8 | 345 | 1.7 | 26.09 | B063 | TH/TBH100LA4 | 12000 | 3462 |
| 54.7 | 349 | 1.8 | 17.00 | B063 | TBS112MA6 | 12000 | 3459 |
| 54.7 | 346 | 2.5 | 26.71 | B083 | TP/TBP112MR4 | 18000 | 5521 |
| 54.5 | 335 | 1.0 | 52.83 | BA73 | TH/TBH90L2 | 7384 | 3692 |
| 54.5 | 335 | 1.0 | 52.83 | BA73 | TP/TBP90L2 | 7384 | 3692 |
| 54.4 | 347 | 1.7 | 26.09 | B063 | TBS100LA4 | 12000 | 3468 |
| 54.3 | 336 | 3.8 | 53.02 | B103 | TH/TBH90L2 | 22000 | 6903 |
| 54.3 | 336 | 3.8 | 53.02 | B103 | TP/TBP90L2 | 22000 | 6903 |
| 54.1 | 337 | 1.0 | 52.83 | BA73 | TBS90L2 | 7401 | 3701 |
| 53.9 | 351 | 2.4 | 26.71 | B083 | TP/TBP100LA4 | 18000 | 5542 |
| 53.9 | 338 | 3.8 | 53.02 | B103 | TBS90L2 | 22000 | 6918 |
| 53.5 | 353 | 2.4 | 26.71 | B083 | TH/TBH100LA4 | 18000 | 5553 |
| 53.5 | 377 | 1.2 | 17.94 | BA72 | TH/TBH112M6 | 7430 | 3715 |
| 53.5 | 377 | 1.2 | 17.94 | BA72 | TP/TBP112M6 | 7430 | 3715 |

# 5.1 B/BA MOTORIDUTTORE (50Hz)



## 2.20 kW

| n2 [rpm] | M2 [Nm] | fs | i | Riduttore | Motore | Fr2 D-S-P [N] | Fr2 C [N] |
|---|---|---|---|---|---|---|---|
| 53.2 | 356 | 2.4 | 26.71 | B083 | TBS100LA4 | 18000 | 5564 |
| 53.2 | 375 | 1.1 | 27.45 | BA72 | TP/TBP112MR4 | 7445 | 3723 |
| 52.5 | 380 | 1.1 | 27.45 | BA72 | TP/TBP100LA4 | 7479 | 3740 |
| 52.4 | 365 | 2.4 | 18.32 | B083 | TH/TBH112M6 | 18000 | 5583 |
| 52.4 | 365 | 2.4 | 18.32 | B083 | TP/TBP112M6 | 18000 | 5583 |
| 52.1 | 363 | 1.7 | 28.03 | B063 | TP/TBP112MR4 | 12000 | 3505 |
| 52.1 | 383 | 1.1 | 27.45 | BA72 | TH/TBH100LA4 | 7497 | 3748 |
| 51.9 | 352 | 1.8 | 55.52 | B083 | TH/TBH90L2 | 18000 | 5617 |
| 51.9 | 352 | 1.8 | 55.52 | B083 | TP/TBP90L2 | 18000 | 5617 |
| 51.8 | 389 | 1.1 | 17.94 | BA72 | TBS112MA6 | 7509 | 3755 |
| 51.7 | 386 | 1.1 | 27.45 | BA72 | TBS100LA4 | 7514 | 3757 |
| 51.5 | 354 | 1.8 | 55.52 | B083 | TBS90L2 | 18000 | 5628 |
| 51.4 | 368 | 1.6 | 28.03 | B063 | TP/TBP100LA4 | 12000 | 3517 |
| 51.0 | 371 | 1.6 | 28.03 | B063 | TH/TBH100LA4 | 12000 | 3523 |
| 50.8 | 376 | 2.4 | 18.32 | B083 | TBS112MA6 | 18000 | 5632 |
| 50.7 | 373 | 1.6 | 28.03 | B063 | TBS100LA4 | 12000 | 3529 |
| 50.6 | 361 | 1.2 | 56.93 | B063 | TH/TBH90L2 | 12000 | 3547 |
| 50.6 | 361 | 1.2 | 56.93 | B063 | TP/TBP90L2 | 12000 | 3547 |
| 50.4 | 379 | 3.9 | 19.06 | B103 | TH/TBH112M6 | 22000 | 7048 |
| 50.4 | 379 | 3.9 | 19.06 | B103 | TP/TBP112M6 | 22000 | 7048 |
| 50.2 | 363 | 1.2 | 56.93 | B063 | TBS90L2 | 12000 | 3553 |
| 49.5 | 382 | 2.2 | 29.50 | B083 | TP/TBP112MR4 | 18000 | 5676 |
| 49.2 | 371 | 3.4 | 58.50 | B103 | TH/TBH90L2 | 22000 | 7112 |
| 49.2 | 371 | 3.4 | 58.50 | B103 | TP/TBP90L2 | 22000 | 7112 |
| 48.9 | 373 | 3.4 | 58.50 | B103 | TBS90L2 | 22000 | 7127 |
| 48.8 | 387 | 2.2 | 29.50 | B083 | TP/TBP100LA4 | 18000 | 5698 |
| 48.8 | 391 | 3.8 | 19.06 | B103 | TBS112MA6 | 22000 | 7116 |
| 48.5 | 390 | 2.2 | 29.50 | B083 | TH/TBH100LA4 | 18000 | 5709 |
| 48.1 | 393 | 2.2 | 29.50 | B083 | TBS100LA4 | 18000 | 5720 |
| 48.0 | 380 | 1.7 | 59.96 | B083 | TH/TBH90L2 | 18000 | 5739 |
| 48.0 | 380 | 1.7 | 59.96 | B083 | TP/TBP90L2 | 18000 | 5739 |
| 47.7 | 383 | 1.7 | 59.96 | B083 | TBS90L2 | 18000 | 5750 |
| 47.1 | 401 | 4.0 | 30.55 | B103 | TP/TBP100LA4 | 22000 | 7194 |
| 46.8 | 404 | 4.0 | 30.55 | B103 | TH/TBH100LA4 | 22000 | 7209 |
| 46.5 | 407 | 3.9 | 30.55 | B103 | TBS100LA4 | 22000 | 7224 |
| 45.9 | 412 | 2.1 | 31.80 | B083 | TP/TBP112MR4 | 18000 | 5795 |
| 45.3 | 418 | 2.0 | 31.80 | B083 | TP/TBP100LA4 | 18000 | 5817 |
| 45.2 | 404 | 1.6 | 63.74 | B083 | TH/TBH90L2 | 18000 | 5838 |
| 45.2 | 404 | 1.6 | 63.74 | B083 | TP/TBP90L2 | 18000 | 5838 |
| 45.0 | 420 | 2.0 | 31.80 | B083 | TH/TBH100LA4 | 18000 | 5828 |
| 44.9 | 407 | 1.6 | 63.74 | B083 | TBS90L2 | 18000 | 5849 |

# 5.1 B/BA MOTORIDUTTORE (50Hz)



## 2.20 kW

| n2 [rpm] | M2 [Nm] | fs | i | Riduttore | Motore | Fr2 D-S-P [N] | Fr2 C [N] |
|---|---|---|---|---|---|---|---|
| 44.7 | 423 | 2.0 | 31.80 | B083 | TBS100LA4 | 18000 | 5839 |
| 44.4 | 411 | 3.1 | 64.89 | B103 | TH/TBH90L2 | 22000 | 7336 |
| 44.4 | 411 | 3.1 | 64.89 | B103 | TP/TBP90L2 | 22000 | 7336 |
| 44.2 | 428 | 4.0 | 33.07 | B103 | TP/TBP112MR4 | 22000 | 7336 |
| 44.2 | 452 | 0.9 | 33.04 | BA72 | TP/TBP112MR4 | 7920 | 3960 |
| 44.1 | 414 | 3.1 | 64.89 | B103 | TBS90L2 | 22000 | 7352 |
| 43.7 | 433 | 1.4 | 33.43 | B063 | TP/TBP112MR4 | 12000 | 3653 |
| 43.6 | 458 | 0.9 | 33.04 | BA72 | TP/TBP100LA4 | 7956 | 3978 |
| 43.5 | 434 | 3.9 | 33.07 | B103 | TP/TBP100LA4 | 22000 | 7366 |
| 43.3 | 466 | 0.9 | 22.19 | BA72 | TH/TBH112M6 | 7976 | 3988 |
| 43.3 | 466 | 0.9 | 22.19 | BA72 | TP/TBP112M6 | 7976 | 3988 |
| 43.3 | 461 | 0.9 | 33.04 | BA72 | TH/TBH100LA4 | 7975 | 3987 |
| 43.2 | 437 | 3.9 | 33.07 | B103 | TH/TBH100LA4 | 22000 | 7381 |
| 43.1 | 439 | 1.4 | 33.43 | B063 | TP/TBP100LA4 | 12000 | 3664 |
| 43.0 | 464 | 0.9 | 33.04 | BA72 | TBS100LA4 | 7993 | 3997 |
| 42.9 | 445 | 1.4 | 22.39 | B063 | TH/TBH112M6 | 12000 | 3663 |
| 42.9 | 445 | 1.4 | 22.39 | B063 | TP/TBP112M6 | 12000 | 3663 |
| 42.9 | 440 | 3.9 | 33.07 | B103 | TBS100LA4 | 22000 | 7396 |
| 42.8 | 442 | 1.4 | 33.43 | B063 | TH/TBH100LA4 | 12000 | 3670 |
| 42.5 | 445 | 1.3 | 33.43 | B063 | TBS100LA4 | 12000 | 3676 |
| 42.3 | 447 | 1.9 | 34.49 | B083 | TP/TBP112MR4 | 18000 | 5925 |
| 42.1 | 454 | 2.0 | 22.82 | B083 | TH/TBH112M6 | 18000 | 5930 |
| 42.1 | 454 | 2.0 | 22.82 | B083 | TP/TBP112M6 | 18000 | 5930 |
| 42.0 | 434 | 2.9 | 68.58 | B103 | TH/TBH90L2 | 22000 | 7458 |
| 42.0 | 434 | 2.9 | 68.58 | B103 | TP/TBP90L2 | 22000 | 7458 |
| 41.9 | 481 | 0.9 | 22.19 | BA72 | TBS112MA6 | 8061 | 4030 |
| 41.7 | 453 | 1.9 | 34.49 | B083 | TP/TBP100LA4 | 18000 | 5948 |
| 41.7 | 438 | 1.5 | 69.14 | B083 | TH/TBH90L2 | 18000 | 5970 |
| 41.7 | 438 | 1.5 | 69.14 | B083 | TP/TBP90L2 | 18000 | 5970 |
| 41.7 | 438 | 2.9 | 68.58 | B103 | TBS90L2 | 22000 | 7474 |
| 41.6 | 438 | 1.0 | 69.16 | B063 | TH/TBH90L2 | 12000 | 3713 |
| 41.6 | 438 | 1.0 | 69.16 | B063 | TP/TBP90L2 | 12000 | 3713 |
| 41.5 | 460 | 1.4 | 22.39 | B063 | TBS112MA6 | 12000 | 3689 |
| 41.5 | 456 | 1.9 | 34.49 | B083 | TH/TBH100LA4 | 18000 | 5959 |
| 41.4 | 441 | 1.0 | 69.16 | B063 | TBS90L2 | 12000 | 3719 |
| 41.4 | 441 | 1.4 | 69.14 | B083 | TBS90L2 | 18000 | 5981 |
| 41.2 | 459 | 1.9 | 34.49 | B083 | TBS100LA4 | 18000 | 5970 |
| 40.8 | 469 | 1.9 | 22.82 | B083 | TBS112MA6 | 18000 | 5981 |
| 40.7 | 465 | 3.7 | 35.87 | B103 | TP/TBP112MR4 | 22000 | 7515 |
| 40.5 | 471 | 3.1 | 23.70 | B103 | TH/TBH112M6 | 22000 | 7522 |
| 40.5 | 471 | 3.1 | 23.70 | B103 | TP/TBP112M6 | 22000 | 7522 |

# 5.1 B/BA MOTORIDUTTORE (50Hz)



## 2.20 kW

| n2 [rpm] | M2 [Nm] | fs | i | Riduttore | Motore | Fr2 D-S-P [N] | Fr2 C [N] |
|---|---|---|---|---|---|---|---|
| 40.1 | 471 | 3.6 | 35.87 | B103 | TP/TBP100LA4 | 22000 | 7546 |
| 39.9 | 474 | 3.6 | 35.87 | B103 | TH/TBH100LA4 | 22000 | 7561 |
| 39.6 | 478 | 3.6 | 35.87 | B103 | TBS100LA4 | 22000 | 7577 |
| 39.6 | 461 | 2.8 | 72.76 | B103 | TH/TBH90L2 | 22000 | 7591 |
| 39.6 | 461 | 2.8 | 72.76 | B103 | TP/TBP90L2 | 22000 | 7591 |
| 39.4 | 463 | 1.4 | 73.14 | B083 | TH/TBH90L2 | 18000 | 6062 |
| 39.4 | 463 | 1.4 | 73.14 | B083 | TP/TBP90L2 | 18000 | 6062 |
| 39.3 | 464 | 2.7 | 72.76 | B103 | TBS90L2 | 22000 | 7606 |
| 39.2 | 487 | 3.0 | 23.70 | B103 | TBS112MA6 | 22000 | 7592 |
| 39.1 | 467 | 1.4 | 73.14 | B083 | TBS90L2 | 18000 | 6073 |
| 37.8 | 500 | 1.2 | 38.58 | B063 | TP/TBP112MR4 | 12000 | 3771 |
| 37.3 | 507 | 1.2 | 38.58 | B063 | TP/TBP100LA4 | 12000 | 3782 |
| 37.1 | 510 | 1.2 | 38.58 | B063 | TH/TBH100LA4 | 12000 | 3787 |
| 36.9 | 513 | 1.7 | 39.60 | B083 | TP/TBP112MR4 | 18000 | 6149 |
| 36.8 | 514 | 1.2 | 38.58 | B063 | TBS100LA4 | 12000 | 3793 |
| 36.8 | 519 | 1.2 | 26.09 | B063 | TH/TBH112M6 | 12000 | 3787 |
| 36.8 | 519 | 1.2 | 26.09 | B063 | TP/TBP112M6 | 12000 | 3787 |
| 36.5 | 500 | 2.5 | 78.92 | B103 | TH/TBH90L2 | 22000 | 7776 |
| 36.5 | 500 | 2.5 | 78.92 | B103 | TP/TBP90L2 | 22000 | 7776 |
| 36.4 | 520 | 1.6 | 39.60 | B083 | TP/TBP100LA4 | 18000 | 6172 |
| 36.2 | 527 | 3.0 | 26.51 | B103 | TH/TBH112M6 | 22000 | 7774 |
| 36.2 | 527 | 3.0 | 26.51 | B103 | TP/TBP112M6 | 22000 | 7774 |
| 36.2 | 504 | 2.5 | 78.92 | B103 | TBS90L2 | 22000 | 7791 |
| 36.1 | 524 | 1.6 | 39.60 | B083 | TH/TBH100LA4 | 18000 | 6183 |
| 35.9 | 527 | 1.6 | 39.60 | B083 | TBS100LA4 | 18000 | 6195 |
| 35.9 | 531 | 1.7 | 26.71 | B083 | TH/TBH112M6 | 18000 | 6185 |
| 35.9 | 531 | 1.7 | 26.71 | B083 | TP/TBP112M6 | 18000 | 6185 |
| 35.7 | 512 | 1.2 | 80.76 | B083 | TH/TBH90L2 | 18000 | 6225 |
| 35.7 | 512 | 1.2 | 80.76 | B083 | TP/TBP90L2 | 18000 | 6225 |
| 35.6 | 536 | 1.2 | 26.09 | B063 | TBS112MA6 | 12000 | 3812 |
| 35.5 | 533 | 3.2 | 41.12 | B103 | TP/TBP112MR4 | 22000 | 7823 |
| 35.4 | 515 | 1.2 | 80.76 | B083 | TBS90L2 | 18000 | 6237 |
| 35.1 | 544 | 2.9 | 26.51 | B103 | TBS112MA6 | 22000 | 7847 |
| 35.0 | 540 | 3.1 | 41.12 | B103 | TP/TBP100LA4 | 22000 | 7855 |
| 34.8 | 549 | 1.6 | 26.71 | B083 | TBS112MA6 | 18000 | 6237 |
| 34.8 | 544 | 3.1 | 41.12 | B103 | TH/TBH100LA4 | 22000 | 7871 |
| 34.5 | 548 | 3.1 | 41.12 | B103 | TBS100LA4 | 22000 | 7887 |
| 34.4 | 530 | 2.5 | 83.66 | B103 | TH/TBH90L2 | 22000 | 7910 |
| 34.4 | 530 | 2.5 | 83.66 | B103 | TP/TBP90L2 | 22000 | 7910 |
| 34.2 | 558 | 1.1 | 28.03 | B063 | TH/TBH112M6 | 12000 | 3844 |
| 34.2 | 558 | 1.1 | 28.03 | B063 | TP/TBP112M6 | 12000 | 3844 |

# 5.1 B/BA MOTORIDUTTORE (50Hz)



## 2.20 kW

| n2 [rpm] | M2 [Nm] | fs | i | Riduttore | Motore | Fr2 D-S-P [N] | Fr2 C [N] |
|---|---|---|---|---|---|---|---|
| 34.2 | 534 | 2.5 | 83.66 | B103 | TBS90L2 | 22000 | 7926 |
| 34.0 | 556 | 1.5 | 42.95 | B083 | TP/TBP112MR4 | 18000 | 6282 |
| 33.8 | 560 | 1.1 | 43.22 | B063 | TP/TBP112MR4 | 12000 | 3862 |
| 33.5 | 564 | 1.5 | 42.95 | B083 | TP/TBP100LA4 | 18000 | 6305 |
| 33.3 | 568 | 1.1 | 43.22 | B063 | TP/TBP100LA4 | 12000 | 3873 |
| 33.3 | 568 | 1.5 | 42.95 | B083 | TH/TBH100LA4 | 18000 | 6316 |
| 33.2 | 576 | 1.1 | 28.03 | B063 | TBS112MA6 | 12000 | 3869 |
| 33.1 | 572 | 1.0 | 43.22 | B063 | TH/TBH100LA4 | 12000 | 3878 |
| 33.1 | 572 | 1.5 | 42.95 | B083 | TBS100LA4 | 18000 | 6328 |
| 32.9 | 576 | 1.0 | 43.22 | B063 | TBS100LA4 | 12000 | 3884 |
| 32.7 | 578 | 2.9 | 44.61 | B103 | TP/TBP112MR4 | 22000 | 8011 |
| 32.5 | 587 | 1.5 | 29.50 | B083 | TH/TBH112M6 | 18000 | 6347 |
| 32.5 | 587 | 1.5 | 29.50 | B083 | TP/TBP112M6 | 18000 | 6347 |
| 32.3 | 586 | 2.9 | 44.61 | B103 | TP/TBP100LA4 | 22000 | 8043 |
| 32.1 | 588 | 1.4 | 45.44 | B083 | TP/TBP112MR4 | 18000 | 6375 |
| 32.1 | 590 | 2.9 | 44.61 | B103 | TH/TBH100LA4 | 22000 | 8059 |
| 31.8 | 594 | 2.9 | 44.61 | B103 | TBS100LA4 | 22000 | 8076 |
| 31.7 | 597 | 1.4 | 45.44 | B083 | TP/TBP100LA4 | 18000 | 6398 |
| 31.5 | 606 | 1.5 | 29.50 | B083 | TBS112MA6 | 18000 | 6399 |
| 31.5 | 601 | 1.4 | 45.44 | B083 | TH/TBH100LA4 | 18000 | 6409 |
| 31.4 | 608 | 2.8 | 30.55 | B103 | TH/TBH112M6 | 22000 | 8101 |
| 31.4 | 608 | 2.8 | 30.55 | B103 | TP/TBP112M6 | 22000 | 8101 |
| 31.3 | 605 | 1.4 | 45.44 | B083 | TBS100LA4 | 18000 | 6421 |
| 31.2 | 584 | 1.1 | 92.19 | B083 | TH/TBH90L2 | 18000 | 6446 |
| 31.2 | 584 | 1.1 | 92.19 | B083 | TP/TBP90L2 | 18000 | 6446 |
| 31.2 | 585 | 2.3 | 92.31 | B103 | TH/TBH90L2 | 22000 | 8140 |
| 31.2 | 585 | 2.3 | 92.31 | B103 | TP/TBP90L2 | 22000 | 8140 |
| 31.0 | 588 | 1.1 | 92.19 | B083 | TBS90L2 | 18000 | 6457 |
| 31.0 | 589 | 2.3 | 92.31 | B103 | TBS90L2 | 22000 | 8157 |
| 30.9 | 612 | 2.8 | 47.28 | B103 | TP/TBP112MR4 | 22000 | 8147 |
| 30.5 | 621 | 2.7 | 47.28 | B103 | TP/TBP100LA4 | 22000 | 8180 |
| 30.4 | 627 | 2.7 | 30.55 | B103 | TBS112MA6 | 22000 | 8176 |
| 30.2 | 633 | 1.4 | 31.80 | B083 | TH/TBH112M6 | 18000 | 6470 |
| 30.2 | 633 | 1.4 | 31.80 | B083 | TP/TBP112M6 | 18000 | 6470 |
| 30.2 | 625 | 2.7 | 47.28 | B103 | TH/TBH100LA4 | 22000 | 8196 |
| 30.0 | 630 | 2.7 | 47.28 | B103 | TBS100LA4 | 22000 | 8213 |
| 29.2 | 653 | 1.4 | 31.80 | B083 | TBS112MA6 | 18000 | 6523 |
| 29.1 | 651 | 2.6 | 50.24 | B103 | TP/TBP112MR4 | 22000 | 8291 |
| 29.0 | 658 | 2.7 | 33.07 | B103 | TH/TBH112M6 | 22000 | 8288 |
| 29.0 | 658 | 2.7 | 33.07 | B103 | TP/TBP112M6 | 22000 | 8288 |
| 28.7 | 665 | 0.9 | 33.43 | B063 | TH/TBH112M6 | 12000 | 3978 |

# 5.1 B/BA MOTORIDUTTORE (50Hz)



## 2.20 kW

| n2 [rpm] | M2 [Nm] | fs | i | Riduttore | Motore | Fr2 D-S-P [N] | Fr2 C [N] |
|---|---|---|---|---|---|---|---|
| 28.7 | 665 | 0.9 | 33.43 | B063 | TP/TBP112M6 | 12000 | 3978 |
| 28.7 | 658 | 0.9 | 50.81 | B063 | TP/TBP112MR4 | 12000 | 3986 |
| 28.7 | 660 | 2.6 | 50.24 | B103 | TP/TBP100LA4 | 22000 | 8323 |
| 28.6 | 637 | 1.0 | 100.57 | B083 | TH/TBH90L2 | 18000 | 6592 |
| 28.6 | 637 | 1.0 | 100.57 | B083 | TP/TBP90L2 | 18000 | 6592 |
| 28.5 | 663 | 1.3 | 51.19 | B083 | TP/TBP112MR4 | 18000 | 6572 |
| 28.5 | 664 | 2.6 | 50.24 | B103 | TH/TBH100LA4 | 22000 | 8340 |
| 28.3 | 669 | 2.5 | 50.24 | B103 | TBS100LA4 | 22000 | 8357 |
| 28.1 | 672 | 1.3 | 51.19 | B083 | TP/TBP100LA4 | 18000 | 6594 |
| 28.1 | 679 | 2.6 | 33.07 | B103 | TBS112MA6 | 22000 | 8363 |
| 27.9 | 677 | 1.3 | 51.19 | B083 | TH/TBH100LA4 | 18000 | 6606 |
| 27.8 | 687 | 0.9 | 33.43 | B063 | TBS112MA6 | 12000 | 4002 |
| 27.8 | 686 | 1.3 | 34.49 | B083 | TH/TBH112M6 | 18000 | 6604 |
| 27.8 | 686 | 1.3 | 34.49 | B083 | TP/TBP112M6 | 18000 | 6604 |
| 27.7 | 682 | 1.2 | 51.19 | B083 | TBS100LA4 | 18000 | 6618 |
| 27.5 | 687 | 2.5 | 53.02 | B103 | TP/TBP112MR4 | 22000 | 8419 |
| 27.3 | 668 | 2.0 | 105.44 | B103 | TH/TBH90L2 | 22000 | 8459 |
| 27.3 | 668 | 2.0 | 105.44 | B103 | TP/TBP90L2 | 22000 | 8459 |
| 27.2 | 696 | 2.4 | 53.02 | B103 | TP/TBP100LA4 | 22000 | 8452 |
| 27.1 | 673 | 2.0 | 105.44 | B103 | TBS90L2 | 22000 | 8476 |
| 27.0 | 708 | 1.3 | 34.49 | B083 | TBS112MA6 | 18000 | 6657 |
| 27.0 | 701 | 2.4 | 53.02 | B103 | TH/TBH100LA4 | 22000 | 8469 |
| 27.0 | 676 | 3.9 | 106.65 | B123 | TH/TBH90L2 | 30000 | 11943 |
| 27.0 | 676 | 3.9 | 106.65 | B123 | TP/TBP90L2 | 30000 | 11943 |
| 26.8 | 706 | 2.4 | 53.02 | B103 | TBS100LA4 | 22000 | 8486 |
| 26.8 | 714 | 2.5 | 35.87 | B103 | TH/TBH112M6 | 22000 | 8482 |
| 26.8 | 714 | 2.5 | 35.87 | B103 | TP/TBP112M6 | 22000 | 8482 |
| 26.8 | 680 | 3.9 | 106.65 | B123 | TBS90L2 | 30000 | 11966 |
| 26.3 | 719 | 1.2 | 55.52 | B083 | TP/TBP112MR4 | 18000 | 6706 |
| 25.9 | 729 | 1.2 | 55.52 | B083 | TP/TBP100LA4 | 18000 | 6729 |
| 25.9 | 737 | 2.4 | 35.87 | B103 | TBS112MA6 | 22000 | 8559 |
| 25.8 | 734 | 1.2 | 55.52 | B083 | TH/TBH100LA4 | 18000 | 6741 |
| 25.6 | 739 | 1.1 | 55.52 | B083 | TBS100LA4 | 18000 | 6752 |
| 25.1 | 727 | 1.9 | 114.80 | B103 | TH/TBH90L2 | 22000 | 8666 |
| 25.1 | 727 | 1.9 | 114.80 | B103 | TP/TBP90L2 | 22000 | 8666 |
| 25.0 | 758 | 2.2 | 58.50 | B103 | TP/TBP112MR4 | 22000 | 8657 |
| 24.9 | 732 | 1.8 | 114.80 | B103 | TBS90L2 | 22000 | 8683 |
| 24.6 | 768 | 2.2 | 58.50 | B103 | TP/TBP100LA4 | 22000 | 8691 |
| 24.4 | 777 | 1.1 | 59.96 | B083 | TP/TBP112MR4 | 18000 | 6833 |
| 24.4 | 774 | 2.2 | 58.50 | B103 | TH/TBH100LA4 | 22000 | 8708 |
| 24.3 | 779 | 2.2 | 58.50 | B103 | TBS100LA4 | 22000 | 8725 |

# 5.1 B/BA MOTORIDUTTORE (50Hz)



## 2.20 kW

| n2 [rpm] | M2 [Nm] | fs | i | Riduttore | Motore | Fr2 D-S-P [N] | Fr2 C [N] |
|---|---|---|---|---|---|---|---|
| 24.2 | 788 | 1.1 | 39.60 | B083 | TH/TBH112M6 | 18000 | 6832 |
| 24.2 | 788 | 1.1 | 39.60 | B083 | TP/TBP112M6 | 18000 | 6832 |
| 24.1 | 758 | 3.5 | 119.60 | B123 | TH/TBH90L2 | 30000 | 12330 |
| 24.1 | 758 | 3.5 | 119.60 | B123 | TP/TBP90L2 | 30000 | 12330 |
| 24.0 | 787 | 1.1 | 59.96 | B083 | TP/TBP100LA4 | 18000 | 6856 |
| 23.9 | 793 | 1.1 | 59.96 | B083 | TH/TBH100LA4 | 18000 | 6868 |
| 23.9 | 763 | 1.8 | 120.42 | B103 | TH/TBH90L2 | 22000 | 8784 |
| 23.9 | 763 | 1.8 | 120.42 | B103 | TP/TBP90L2 | 22000 | 8784 |
| 23.9 | 763 | 3.4 | 119.60 | B123 | TBS90L2 | 30000 | 12353 |
| 23.7 | 798 | 1.1 | 59.96 | B083 | TBS100LA4 | 18000 | 6879 |
| 23.7 | 768 | 1.8 | 120.42 | B103 | TBS90L2 | 22000 | 8802 |
| 23.7 | 806 | 3.6 | 40.53 | B123 | TH/TBH112M6 | 30000 | 12339 |
| 23.7 | 806 | 3.6 | 40.53 | B123 | TP/TBP112M6 | 30000 | 12339 |
| 23.5 | 813 | 1.1 | 39.60 | B083 | TBS112MA6 | 18000 | 6884 |
| 23.3 | 818 | 2.2 | 41.12 | B103 | TH/TBH112M6 | 22000 | 8815 |
| 23.3 | 818 | 2.2 | 41.12 | B103 | TP/TBP112M6 | 22000 | 8815 |
| 22.9 | 826 | 1.0 | 63.74 | B083 | TP/TBP112MR4 | 18000 | 6935 |
| 22.9 | 832 | 3.5 | 40.53 | B123 | TBS112MA6 | 30000 | 12446 |
| 22.8 | 828 | 4.0 | 62.59 | B123 | TH/TBH100LA4 | 30000 | 12471 |
| 22.7 | 833 | 4.0 | 62.59 | B123 | TBS100LA4 | 30000 | 12495 |
| 22.6 | 837 | 1.0 | 63.74 | B083 | TP/TBP100LA4 | 18000 | 6957 |
| 22.6 | 844 | 2.1 | 41.12 | B103 | TBS112MA6 | 22000 | 8893 |
| 22.5 | 840 | 2.0 | 64.89 | B103 | TP/TBP112MR4 | 22000 | 8912 |
| 22.4 | 843 | 1.0 | 63.74 | B083 | TH/TBH100LA4 | 18000 | 6969 |
| 22.4 | 854 | 1.0 | 42.95 | B083 | TH/TBH112M6 | 18000 | 6965 |
| 22.4 | 854 | 1.0 | 42.95 | B083 | TP/TBP112M6 | 18000 | 6965 |
| 22.3 | 849 | 1.0 | 63.74 | B083 | TBS100LA4 | 18000 | 6980 |
| 22.2 | 852 | 2.0 | 64.89 | B103 | TP/TBP100LA4 | 22000 | 8946 |
| 22.2 | 823 | 3.2 | 129.96 | B123 | TH/TBH90L2 | 30000 | 12614 |
| 22.2 | 823 | 3.2 | 129.96 | B123 | TP/TBP90L2 | 30000 | 12614 |
| 22.0 | 858 | 2.0 | 64.89 | B103 | TH/TBH100LA4 | 22000 | 8964 |
| 22.0 | 829 | 3.2 | 129.96 | B123 | TBS90L2 | 30000 | 12638 |
| 21.9 | 864 | 2.0 | 64.89 | B103 | TBS100LA4 | 22000 | 8981 |
| 21.7 | 882 | 1.0 | 42.95 | B083 | TBS112MA6 | 18000 | 7017 |
| 21.7 | 842 | 1.6 | 132.87 | B103 | TH/TBH90L2 | 22000 | 9030 |
| 21.7 | 842 | 1.6 | 132.87 | B103 | TP/TBP90L2 | 22000 | 9030 |
| 21.5 | 848 | 1.6 | 132.87 | B103 | TBS90L2 | 22000 | 9048 |
| 21.5 | 887 | 2.0 | 44.61 | B103 | TH/TBH112M6 | 22000 | 9016 |
| 21.5 | 887 | 2.0 | 44.61 | B103 | TP/TBP112M6 | 22000 | 9016 |
| 21.4 | 893 | 3.5 | 44.89 | B123 | TH/TBH112M6 | 30000 | 12684 |
| 21.4 | 893 | 3.5 | 44.89 | B123 | TP/TBP112M6 | 30000 | 12684 |

# 5.1 B/BA MOTORIDUTTORE (50Hz)



## 2.20 kW

| n2 [rpm] | M2 [Nm] | fs | i | Riduttore | Motore | Fr2 D-S-P [N] | Fr2 C [N] |
|---|---|---|---|---|---|---|---|
| 21.3 | 888 | 1.9 | 68.58 | B103 | TP/TBP112MR4 | 22000 | 9050 |
| 21.1 | 895 | 0.9 | 69.14 | B083 | TP/TBP112MR4 | 18000 | 7068 |
| 21.1 | 904 | 1.0 | 45.44 | B083 | TH/TBH112M6 | 18000 | 7057 |
| 21.1 | 904 | 1.0 | 45.44 | B083 | TP/TBP112M6 | 18000 | 7057 |
| 21.0 | 900 | 1.9 | 68.58 | B103 | TP/TBP100LA4 | 22000 | 9084 |
| 21.0 | 899 | 3.7 | 69.43 | B123 | TP/TBP112MR4 | 30000 | 12754 |
| 20.9 | 907 | 1.9 | 68.58 | B103 | TH/TBH100LA4 | 22000 | 9102 |
| 20.8 | 908 | 0.9 | 69.14 | B083 | TP/TBP100LA4 | 18000 | 7091 |
| 20.8 | 916 | 1.9 | 44.61 | B103 | TBS112MA6 | 22000 | 9095 |
| 20.7 | 914 | 0.9 | 69.14 | B083 | TH/TBH100LA4 | 18000 | 7102 |
| 20.7 | 913 | 1.9 | 68.58 | B103 | TBS100LA4 | 22000 | 9119 |
| 20.7 | 922 | 3.4 | 44.89 | B123 | TBS112MA6 | 30000 | 12793 |
| 20.7 | 912 | 3.6 | 69.43 | B123 | TP/TBP100LA4 | 30000 | 12801 |
| 20.6 | 918 | 3.6 | 69.43 | B123 | TH/TBH100LA4 | 30000 | 12825 |
| 20.5 | 933 | 1.0 | 45.44 | B083 | TBS112MA6 | 18000 | 7109 |
| 20.5 | 921 | 0.9 | 69.14 | B083 | TBS100LA4 | 18000 | 7114 |
| 20.5 | 925 | 3.6 | 69.43 | B123 | TBS100LA4 | 30000 | 12849 |
| 20.3 | 941 | 1.9 | 47.28 | B103 | TH/TBH112M6 | 22000 | 9161 |
| 20.3 | 941 | 1.9 | 47.28 | B103 | TP/TBP112M6 | 22000 | 9161 |
| 20.1 | 942 | 1.8 | 72.76 | B103 | TP/TBP112MR4 | 22000 | 9198 |
| 19.9 | 917 | 1.5 | 144.69 | B103 | TH/TBH90L2 | 22000 | 9246 |
| 19.9 | 917 | 1.5 | 144.69 | B103 | TP/TBP90L2 | 22000 | 9246 |
| 19.9 | 915 | 2.9 | 144.43 | B123 | TH/TBH90L2 | 30000 | 12979 |
| 19.9 | 915 | 2.9 | 144.43 | B123 | TP/TBP90L2 | 30000 | 12979 |
| 19.8 | 923 | 1.5 | 144.69 | B103 | TBS90L2 | 22000 | 9264 |
| 19.8 | 955 | 1.8 | 72.76 | B103 | TP/TBP100LA4 | 22000 | 9233 |
| 19.8 | 921 | 2.8 | 144.43 | B123 | TBS90L2 | 30000 | 13003 |
| 19.7 | 971 | 1.8 | 47.28 | B103 | TBS112MA6 | 22000 | 9241 |
| 19.7 | 962 | 1.8 | 72.76 | B103 | TH/TBH100LA4 | 22000 | 9250 |
| 19.6 | 964 | 3.6 | 74.42 | B123 | TP/TBP112MR4 | 30000 | 12991 |
| 19.5 | 969 | 1.8 | 72.76 | B103 | TBS100LA4 | 22000 | 9268 |
| 19.4 | 977 | 3.6 | 74.42 | B123 | TP/TBP100LA4 | 30000 | 13039 |
| 19.3 | 991 | 3.4 | 49.80 | B123 | TH/TBH112M6 | 30000 | 13039 |
| 19.3 | 991 | 3.4 | 49.80 | B123 | TP/TBP112M6 | 30000 | 13039 |
| 19.2 | 984 | 3.6 | 74.42 | B123 | TH/TBH100LA4 | 30000 | 13063 |
| 19.1 | 999 | 1.8 | 50.24 | B103 | TH/TBH112M6 | 22000 | 9314 |
| 19.1 | 999 | 1.8 | 50.24 | B103 | TP/TBP112M6 | 22000 | 9314 |
| 19.1 | 991 | 3.5 | 74.42 | B123 | TBS100LA4 | 30000 | 13087 |
| 18.7 | 1023 | 3.3 | 49.80 | B123 | TBS112MA6 | 30000 | 13148 |
| 18.5 | 1022 | 1.7 | 78.92 | B103 | TP/TBP112MR4 | 22000 | 9404 |
| 18.5 | 1032 | 1.7 | 50.24 | B103 | TBS112MA6 | 22000 | 9394 |

# 5.1 B/BA MOTORIDUTTORE (50Hz)



## 2.20 kW

| n2 [rpm] | M2 [Nm] | fs | i | Riduttore | Motore | Fr2 D-S-P [N] | Fr2 C [N] |
|---|---|---|---|---|---|---|---|
| 18.2 | 1036 | 1.6 | 78.92 | B103 | TP/TBP100LA4 | 22000 | 9439 |
| 18.2 | 1037 | 3.4 | 80.04 | B123 | TP/TBP112MR4 | 30000 | 13242 |
| 18.1 | 1044 | 1.6 | 78.92 | B103 | TH/TBH100LA4 | 22000 | 9457 |
| 18.1 | 1055 | 1.7 | 53.02 | B103 | TH/TBH112M6 | 22000 | 9450 |
| 18.1 | 1055 | 1.7 | 53.02 | B103 | TP/TBP112M6 | 22000 | 9450 |
| 18.0 | 1051 | 1.6 | 78.92 | B103 | TBS100LA4 | 22000 | 9475 |
| 18.0 | 1051 | 3.3 | 80.04 | B123 | TP/TBP100LA4 | 30000 | 13290 |
| 18.0 | 1015 | 2.6 | 160.23 | B123 | TH/TBH90L2 | 30000 | 13342 |
| 18.0 | 1015 | 2.6 | 160.23 | B123 | TP/TBP90L2 | 30000 | 13342 |
| 17.9 | 1058 | 3.3 | 80.04 | B123 | TH/TBH100LA4 | 30000 | 13314 |
| 17.8 | 1022 | 2.6 | 160.23 | B123 | TBS90L2 | 30000 | 13366 |
| 17.7 | 1080 | 3.1 | 54.30 | B123 | TH/TBH112M6 | 30000 | 13337 |
| 17.7 | 1080 | 3.1 | 54.30 | B123 | TP/TBP112M6 | 30000 | 13337 |
| 17.7 | 1066 | 3.3 | 80.04 | B123 | TBS100LA4 | 30000 | 13339 |
| 17.5 | 1083 | 1.7 | 83.66 | B103 | TP/TBP112MR4 | 22000 | 9552 |
| 17.5 | 1089 | 1.6 | 53.02 | B103 | TBS112MA6 | 22000 | 9531 |
| 17.4 | 1047 | 1.3 | 165.25 | B103 | TH/TBH90L2 | 22000 | 9587 |
| 17.4 | 1047 | 1.3 | 165.25 | B103 | TP/TBP90L2 | 22000 | 9587 |
| 17.3 | 1054 | 1.3 | 165.25 | B103 | TBS90L2 | 22000 | 9605 |
| 17.2 | 1099 | 1.6 | 83.66 | B103 | TP/TBP100LA4 | 22000 | 9588 |
| 17.1 | 1106 | 1.6 | 83.66 | B103 | TH/TBH100LA4 | 22000 | 9605 |
| 17.1 | 1115 | 3.0 | 54.30 | B123 | TBS112MA6 | 30000 | 13446 |
| 17.0 | 1114 | 1.6 | 83.66 | B103 | TBS100LA4 | 22000 | 9623 |
| 16.4 | 1164 | 1.5 | 58.50 | B103 | TH/TBH112M6 | 22000 | 9701 |
| 16.4 | 1164 | 1.5 | 58.50 | B103 | TP/TBP112M6 | 22000 | 9701 |
| 16.2 | 1181 | 2.8 | 59.36 | B123 | TH/TBH112M6 | 30000 | 13644 |
| 16.2 | 1181 | 2.8 | 59.36 | B123 | TP/TBP112M6 | 30000 | 13644 |
| 16.2 | 1164 | 3.0 | 89.87 | B123 | TP/TBP112MR4 | 30000 | 13644 |
| 16.0 | 1180 | 3.0 | 89.87 | B123 | TP/TBP100LA4 | 30000 | 13692 |
| 16.0 | 1143 | 2.3 | 180.40 | B123 | TH/TBH90L2 | 30000 | 13760 |
| 16.0 | 1143 | 2.3 | 180.40 | B123 | TP/TBP90L2 | 30000 | 13760 |
| 15.9 | 1201 | 1.5 | 58.50 | B103 | TBS112MA6 | 22000 | 9782 |
| 15.9 | 1151 | 2.3 | 180.40 | B123 | TBS90L2 | 30000 | 13784 |
| 15.9 | 1188 | 2.9 | 89.87 | B123 | TH/TBH100LA4 | 30000 | 13716 |
| 15.8 | 1196 | 1.5 | 92.31 | B103 | TP/TBP112MR4 | 22000 | 9805 |
| 15.8 | 1197 | 2.9 | 89.87 | B123 | TBS100LA4 | 30000 | 13741 |
| 15.7 | 1219 | 2.8 | 59.36 | B123 | TBS112MA6 | 30000 | 13755 |
| 15.6 | 1212 | 1.5 | 92.31 | B103 | TP/TBP100LA4 | 22000 | 9840 |
| 15.5 | 1221 | 1.5 | 92.31 | B103 | TH/TBH100LA4 | 22000 | 9858 |
| 15.4 | 1229 | 1.5 | 92.31 | B103 | TBS100LA4 | 22000 | 9877 |
| 15.3 | 1245 | 2.8 | 62.59 | B123 | TH/TBH112M6 | 30000 | 13828 |

# 5.1 B/BA MOTORIDUTTORE (50Hz)



## 2.20 kW

| n2 [rpm] | M2 [Nm] | fs | i | Riduttore | Motore | Fr2 D-S-P [N] | Fr2 C [N] |
|---|---|---|---|---|---|---|---|
| 15.3 | 1245 | 2.8 | 62.59 | B123 | TP/TBP112M6 | 30000 | 13828 |
| 15.1 | 1253 | 4.0 | 94.13 | B143 | TBS100LA4 | 40000 | 40000 |
| 14.9 | 1285 | 2.7 | 62.59 | B123 | TBS112MA6 | 30000 | 13938 |
| 14.8 | 1291 | 1.4 | 64.89 | B103 | TH/TBH112M6 | 22000 | 9967 |
| 14.8 | 1291 | 1.4 | 64.89 | B103 | TP/TBP112M6 | 22000 | 9967 |
| 14.6 | 1291 | 2.7 | 99.70 | B123 | TP/TBP112MR4 | 30000 | 14006 |
| 14.4 | 1309 | 2.7 | 99.70 | B123 | TP/TBP100LA4 | 30000 | 14054 |
| 14.3 | 1332 | 1.3 | 64.89 | B103 | TBS112MA6 | 22000 | 10049 |
| 14.3 | 1318 | 2.7 | 99.70 | B123 | TH/TBH100LA4 | 30000 | 14078 |
| 14.3 | 1332 | 3.9 | 64.88 | B143 | TBS112MA6 | 40000 | 40000 |
| 14.2 | 1328 | 2.6 | 99.70 | B123 | TBS100LA4 | 30000 | 14103 |
| 14.0 | 1364 | 1.3 | 68.58 | B103 | TH/TBH112M6 | 22000 | 10110 |
| 14.0 | 1364 | 1.3 | 68.58 | B103 | TP/TBP112M6 | 22000 | 10110 |
| 13.8 | 1366 | 1.3 | 105.44 | B103 | TP/TBP112MR4 | 22000 | 10149 |
| 13.8 | 1381 | 2.5 | 69.43 | B123 | TH/TBH112M6 | 30000 | 14188 |
| 13.8 | 1381 | 2.5 | 69.43 | B123 | TP/TBP112M6 | 30000 | 14188 |
| 13.8 | 1371 | 3.6 | 105.83 | B143 | TP/TBP112MR4 | 40000 | 40000 |
| 13.7 | 1385 | 1.3 | 105.44 | B103 | TP/TBP100LA4 | 22000 | 10185 |
| 13.7 | 1381 | 2.5 | 106.65 | B123 | TP/TBP112MR4 | 30000 | 14241 |
| 13.6 | 1394 | 1.3 | 105.44 | B103 | TH/TBH100LA4 | 22000 | 10203 |
| 13.6 | 1408 | 1.3 | 68.58 | B103 | TBS112MA6 | 22000 | 10192 |
| 13.6 | 1401 | 3.7 | 70.43 | B143 | TH/TBH112M6 | 40000 | 40000 |
| 13.6 | 1401 | 3.7 | 70.43 | B143 | TP/TBP112M6 | 40000 | 40000 |
| 13.6 | 1390 | 3.6 | 105.83 | B143 | TP/TBP100LA4 | 40000 | 40000 |
| 13.5 | 1404 | 1.3 | 105.44 | B103 | TBS100LA4 | 22000 | 10222 |
| 13.5 | 1400 | 2.5 | 106.65 | B123 | TP/TBP100LA4 | 30000 | 14289 |
| 13.5 | 1399 | 3.6 | 105.83 | B143 | TH/TBH100LA4 | 40000 | 40000 |
| 13.4 | 1410 | 2.5 | 106.65 | B123 | TH/TBH100LA4 | 30000 | 14313 |
| 13.4 | 1426 | 2.4 | 69.43 | B123 | TBS112MA6 | 30000 | 14298 |
| 13.4 | 1409 | 3.5 | 105.83 | B143 | TBS100LA4 | 40000 | 40000 |
| 13.3 | 1420 | 2.5 | 106.65 | B123 | TBS100LA4 | 30000 | 14338 |
| 13.2 | 1447 | 1.2 | 72.76 | B103 | TH/TBH112M6 | 22000 | 10263 |
| 13.2 | 1447 | 1.2 | 72.76 | B103 | TP/TBP112M6 | 22000 | 10263 |
| 13.2 | 1446 | 3.6 | 70.43 | B143 | TBS112MA6 | 40000 | 40000 |
| 13.0 | 1450 | 3.4 | 111.94 | B143 | TP/TBP112MR4 | 40000 | 40000 |
| 12.9 | 1480 | 2.5 | 74.42 | B123 | TH/TBH112M6 | 30000 | 14428 |
| 12.9 | 1480 | 2.5 | 74.42 | B123 | TP/TBP112M6 | 30000 | 14428 |
| 12.9 | 1470 | 3.4 | 111.94 | B143 | TP/TBP100LA4 | 40000 | 40000 |
| 12.8 | 1494 | 1.2 | 72.76 | B103 | TBS112MA6 | 22000 | 10345 |
| 12.8 | 1480 | 3.4 | 111.94 | B143 | TH/TBH100LA4 | 40000 | 40000 |
| 12.7 | 1487 | 1.2 | 114.80 | B103 | TP/TBP112MR4 | 22000 | 10370 |

# 5.1 B/BA MOTORIDUTTORE (50Hz)



## 2.20 kW

| n2 [rpm] | M2 [Nm] | fs | i | Riduttore | Motore | Fr2 D-S-P [N] | Fr2 C [N] |
|---|---|---|---|---|---|---|---|
| 12.7 | 1491 | 3.4 | 111.94 | B143 | TBS100LA4 | 40000 | 40000 |
| 12.5 | 1518 | 1.2 | 114.80 | B103 | TH/TBH100LA4 | 22000 | 10424 |
| 12.5 | 1507 | 1.2 | 114.80 | B103 | TP/TBP100LA4 | 22000 | 10406 |
| 12.5 | 1528 | 2.4 | 74.42 | B123 | TBS112MA6 | 30000 | 14538 |
| 12.4 | 1529 | 1.2 | 114.80 | B103 | TBS100LA4 | 22000 | 10443 |
| 12.4 | 1534 | 3.4 | 77.12 | B143 | TH/TBH112M6 | 40000 | 40000 |
| 12.4 | 1534 | 3.4 | 77.12 | B143 | TP/TBP112M6 | 40000 | 40000 |
| 12.2 | 1570 | 1.1 | 78.92 | B103 | TH/TBH112M6 | 22000 | 10474 |
| 12.2 | 1570 | 1.1 | 78.92 | B103 | TP/TBP112M6 | 22000 | 10474 |
| 12.2 | 1549 | 2.3 | 119.60 | B123 | TP/TBP112MR4 | 30000 | 14639 |
| 12.1 | 1560 | 1.2 | 120.42 | B103 | TP/TBP112MR4 | 22000 | 10495 |
| 12.1 | 1584 | 3.3 | 77.12 | B143 | TBS112MA6 | 40000 | 40000 |
| 12.0 | 1581 | 1.1 | 120.42 | B103 | TP/TBP100LA4 | 22000 | 10531 |
| 12.0 | 1592 | 2.3 | 80.04 | B123 | TH/TBH112M6 | 30000 | 14680 |
| 12.0 | 1592 | 2.3 | 80.04 | B123 | TP/TBP112M6 | 30000 | 14680 |
| 12.0 | 1581 | 2.2 | 119.60 | B123 | TH/TBH100LA4 | 30000 | 14711 |
| 12.0 | 1570 | 2.2 | 119.60 | B123 | TP/TBP100LA4 | 30000 | 14687 |
| 11.9 | 1592 | 1.1 | 120.42 | B103 | TH/TBH100LA4 | 22000 | 10549 |
| 11.9 | 1593 | 2.2 | 119.60 | B123 | TBS100LA4 | 30000 | 14736 |
| 11.8 | 1621 | 1.1 | 78.92 | B103 | TBS112MA6 | 22000 | 10556 |
| 11.8 | 1604 | 1.1 | 120.42 | B103 | TBS100LA4 | 22000 | 10567 |
| 11.7 | 1614 | 3.1 | 124.62 | B143 | TP/TBP112MR4 | 40000 | 40000 |
| 11.6 | 1644 | 2.2 | 80.04 | B123 | TBS112MA6 | 30000 | 14789 |
| 11.6 | 1636 | 3.1 | 124.62 | B143 | TP/TBP100LA4 | 40000 | 40000 |
| 11.5 | 1664 | 1.1 | 83.66 | B103 | TH/TBH112M6 | 22000 | 10625 |
| 11.5 | 1664 | 1.1 | 83.66 | B103 | TP/TBP112M6 | 22000 | 10625 |
| 11.5 | 1648 | 3.0 | 124.62 | B143 | TH/TBH100LA4 | 40000 | 40000 |
| 11.4 | 1659 | 3.0 | 124.62 | B143 | TBS100LA4 | 40000 | 40000 |
| 11.2 | 1683 | 2.1 | 129.96 | B123 | TP/TBP112MR4 | 30000 | 14927 |
| 11.2 | 1702 | 3.1 | 85.54 | B143 | TH/TBH112M6 | 40000 | 40000 |
| 11.2 | 1702 | 3.1 | 85.54 | B143 | TP/TBP112M6 | 40000 | 40000 |
| 11.1 | 1718 | 1.1 | 83.66 | B103 | TBS112MA6 | 22000 | 10707 |
| 11.1 | 1707 | 2.1 | 129.96 | B123 | TP/TBP100LA4 | 30000 | 14974 |
| 11.0 | 1721 | 1.0 | 132.87 | B103 | TP/TBP112MR4 | 22000 | 10751 |
| 11.0 | 1718 | 2.0 | 129.96 | B123 | TH/TBH100LA4 | 30000 | 14998 |
| 10.9 | 1731 | 2.0 | 129.96 | B123 | TBS100LA4 | 30000 | 15022 |
| 10.9 | 1757 | 3.0 | 85.54 | B143 | TBS112MA6 | 40000 | 40000 |
| 10.8 | 1757 | 1.0 | 132.87 | B103 | TH/TBH100LA4 | 22000 | 10805 |
| 10.8 | 1745 | 1.0 | 132.87 | B103 | TP/TBP100LA4 | 22000 | 10787 |
| 10.7 | 1769 | 1.0 | 132.87 | B103 | TBS100LA4 | 22000 | 10823 |
| 10.7 | 1788 | 2.1 | 89.87 | B123 | TH/TBH112M6 | 30000 | 15076 |

# 5.1 B/BA MOTORIDUTTORE (50Hz)



## 2.20 kW

| n2 [rpm] | M2 [Nm] | fs | i | Riduttore | Motore | Fr2 D-S-P [N] | Fr2 C [N] |
|---|---|---|---|---|---|---|---|
| 10.7 | 1788 | 2.1 | 89.87 | B123 | TP/TBP112M6 | 30000 | 15076 |
| 10.7 | 1767 | 2.8 | 136.44 | B143 | TP/TBP112MR4 | 40000 | 40000 |
| 10.6 | 1792 | 2.8 | 136.44 | B143 | TP/TBP100LA4 | 40000 | 40000 |
| 10.5 | 1804 | 2.8 | 136.44 | B143 | TH/TBH100LA4 | 40000 | 40000 |
| 10.4 | 1836 | 1.0 | 92.31 | B103 | TH/TBH112M6 | 22000 | 10879 |
| 10.4 | 1836 | 1.0 | 92.31 | B103 | TP/TBP112M6 | 22000 | 10879 |
| 10.4 | 1817 | 2.8 | 136.44 | B143 | TBS100LA4 | 40000 | 40000 |
| 10.3 | 1845 | 2.0 | 89.87 | B123 | TBS112MA6 | 30000 | 15184 |
| 10.2 | 1873 | 2.8 | 94.13 | B143 | TH/TBH112M6 | 40000 | 40000 |
| 10.2 | 1873 | 2.8 | 94.13 | B143 | TP/TBP112M6 | 40000 | 40000 |
| 10.1 | 1896 | 1.0 | 92.31 | B103 | TBS112MA6 | 22000 | 10961 |
| 10.1 | 1874 | 1.0 | 144.69 | B103 | TP/TBP112MR4 | 22000 | 10972 |
| 10.1 | 1871 | 1.9 | 144.43 | B123 | TP/TBP112MR4 | 30000 | 15288 |
| 10.0 | 1900 | 0.9 | 144.69 | B103 | TP/TBP100LA4 | 22000 | 11008 |
| 10.0 | 1897 | 1.8 | 144.43 | B123 | TP/TBP100LA4 | 30000 | 15335 |
| 9.9 | 1913 | 0.9 | 144.69 | B103 | TH/TBH100LA4 | 22000 | 11026 |
| 9.9 | 1910 | 1.8 | 144.43 | B123 | TH/TBH100LA4 | 30000 | 15358 |
| 9.9 | 1933 | 2.7 | 94.13 | B143 | TBS112MA6 | 40000 | 40000 |
| 9.8 | 1927 | 0.9 | 144.69 | B103 | TBS100LA4 | 22000 | 11044 |
| 9.8 | 1923 | 1.8 | 144.43 | B123 | TBS100LA4 | 30000 | 15382 |
| 9.8 | 1937 | 2.6 | 149.59 | B143 | TP/TBP112MR4 | 40000 | 40000 |
| 9.6 | 1983 | 1.9 | 99.70 | B123 | TH/TBH112M6 | 30000 | 15427 |
| 9.6 | 1983 | 1.9 | 99.70 | B123 | TP/TBP112M6 | 30000 | 15427 |
| 9.6 | 1978 | 2.5 | 149.59 | B143 | TH/TBH100LA4 | 40000 | 40000 |
| 9.6 | 1964 | 2.5 | 149.59 | B143 | TP/TBP100LA4 | 40000 | 40000 |
| 9.5 | 1992 | 2.5 | 149.59 | B143 | TBS100LA4 | 40000 | 40000 |
| 9.3 | 2047 | 1.8 | 99.70 | B123 | TBS112MA6 | 30000 | 15533 |
| 9.1 | 2098 | 0.9 | 105.44 | B103 | TH/TBH112M6 | 22000 | 11220 |
| 9.1 | 2098 | 0.9 | 105.44 | B103 | TP/TBP112M6 | 22000 | 11220 |
| 9.1 | 2075 | 1.7 | 160.23 | B123 | TP/TBP112MR4 | 30000 | 15638 |
| 9.1 | 2105 | 2.5 | 105.83 | B143 | TH/TBH112M6 | 40000 | 40000 |
| 9.1 | 2105 | 2.5 | 105.83 | B143 | TP/TBP112M6 | 40000 | 40000 |
| 9.0 | 2122 | 1.7 | 106.65 | B123 | TH/TBH112M6 | 30000 | 15651 |
| 9.0 | 2122 | 1.7 | 106.65 | B123 | TP/TBP112M6 | 30000 | 15651 |
| 9.0 | 2104 | 1.7 | 160.23 | B123 | TP/TBP100LA4 | 30000 | 15684 |
| 8.9 | 2119 | 1.7 | 160.23 | B123 | TH/TBH100LA4 | 30000 | 15707 |
| 8.9 | 2134 | 1.6 | 160.23 | B123 | TBS100LA4 | 30000 | 15730 |
| 8.8 | 2173 | 2.4 | 105.83 | B143 | TBS112MA6 | 40000 | 40000 |
| 8.8 | 2157 | 2.3 | 166.53 | B143 | TP/TBP112MR4 | 40000 | 40000 |
| 8.7 | 2190 | 1.7 | 106.65 | B123 | TBS112MA6 | 30000 | 15755 |
| 8.6 | 2227 | 2.4 | 111.94 | B143 | TH/TBH112M6 | 40000 | 40000 |

# 5.1 B/BA MOTORIDUTTORE (50Hz)



## 2.20 kW

| n2 [rpm] | M2 [Nm] | fs | i | Riduttore | Motore | Fr2 D-S-P [N] | Fr2 C [N] |
|---|---|---|---|---|---|---|---|
| 8.6 | 2227 | 2.4 | 111.94 | B143 | TP/TBP112M6 | 40000 | 40000 |
| 8.6 | 2202 | 2.3 | 166.53 | B143 | TH/TBH100LA4 | 40000 | 40000 |
| 8.6 | 2187 | 2.3 | 166.53 | B143 | TP/TBP100LA4 | 40000 | 40000 |
| 8.5 | 2218 | 2.3 | 166.53 | B143 | TBS100LA4 | 40000 | 40000 |
| 8.3 | 2299 | 2.3 | 111.94 | B143 | TBS112MA6 | 40000 | 40000 |
| 8.1 | 2336 | 1.5 | 180.40 | B123 | TP/TBP112MR4 | 30000 | 16027 |
| 8.0 | 2379 | 1.5 | 119.60 | B123 | TH/TBH112M6 | 30000 | 16023 |
| 8.0 | 2379 | 1.5 | 119.60 | B123 | TP/TBP112M6 | 30000 | 16023 |
| 8.0 | 2369 | 1.5 | 180.40 | B123 | TP/TBP100LA4 | 30000 | 16072 |
| 7.9 | 2385 | 1.5 | 180.40 | B123 | TH/TBH100LA4 | 30000 | 16094 |
| 7.9 | 2402 | 1.5 | 180.40 | B123 | TBS100LA4 | 30000 | 16117 |
| 7.8 | 2456 | 1.5 | 119.60 | B123 | TBS112MA6 | 30000 | 16124 |
| 7.8 | 2425 | 2.1 | 187.24 | B143 | TP/TBP112MR4 | 40000 | 40000 |
| 7.7 | 2459 | 2.0 | 187.24 | B143 | TP/TBP100LA4 | 40000 | 40000 |
| 7.7 | 2479 | 2.1 | 124.62 | B143 | TH/TBH112M6 | 40000 | 40000 |
| 7.7 | 2479 | 2.1 | 124.62 | B143 | TP/TBP112M6 | 40000 | 40000 |
| 7.6 | 2476 | 2.0 | 187.24 | B143 | TH/TBH100LA4 | 40000 | 40000 |
| 7.6 | 2493 | 2.0 | 187.24 | B143 | TBS100LA4 | 40000 | 40000 |
| 7.5 | 2559 | 2.1 | 124.62 | B143 | TBS112MA6 | 40000 | 40000 |
| 7.4 | 2585 | 1.4 | 129.96 | B123 | TH/TBH112M6 | 30000 | 16285 |
| 7.4 | 2585 | 1.4 | 129.96 | B123 | TP/TBP112M6 | 30000 | 16285 |
| 7.2 | 2669 | 1.4 | 129.96 | B123 | TBS112MA6 | 30000 | 16382 |
| 7.0 | 2714 | 1.9 | 136.44 | B143 | TH/TBH112M6 | 40000 | 40000 |
| 7.0 | 2714 | 1.9 | 136.44 | B143 | TP/TBP112M6 | 40000 | 40000 |
| 6.8 | 2802 | 1.9 | 136.44 | B143 | TBS112MA6 | 40000 | 40000 |
| 6.6 | 2873 | 1.3 | 144.43 | B123 | TH/TBH112M6 | 30000 | 16604 |
| 6.6 | 2873 | 1.3 | 144.43 | B123 | TP/TBP112M6 | 30000 | 16604 |
| 6.4 | 2966 | 1.2 | 144.43 | B123 | TBS112MA6 | 30000 | 16697 |
| 6.4 | 2976 | 1.8 | 149.59 | B143 | TH/TBH112M6 | 40000 | 40000 |
| 6.4 | 2976 | 1.8 | 149.59 | B143 | TP/TBP112M6 | 40000 | 40000 |
| 6.2 | 3072 | 1.7 | 149.59 | B143 | TBS112MA6 | 40000 | 40000 |
| 6.0 | 3188 | 1.2 | 160.23 | B123 | TH/TBH112M6 | 30000 | 16901 |
| 6.0 | 3188 | 1.2 | 160.23 | B123 | TP/TBP112M6 | 30000 | 16901 |
| 5.8 | 3290 | 1.1 | 160.23 | B123 | TBS112MA6 | 30000 | 16989 |
| 5.8 | 3313 | 1.6 | 166.53 | B143 | TH/TBH112M6 | 40000 | 40000 |
| 5.8 | 3313 | 1.6 | 166.53 | B143 | TP/TBP112M6 | 40000 | 40000 |
| 5.6 | 3420 | 1.5 | 166.53 | B143 | TBS112MA6 | 40000 | 40000 |
| 5.3 | 3589 | 1.0 | 180.40 | B123 | TH/TBH112M6 | 30000 | 17216 |
| 5.3 | 3589 | 1.0 | 180.40 | B123 | TP/TBP112M6 | 30000 | 17216 |
| 5.2 | 3705 | 1.0 | 180.40 | B123 | TBS112MA6 | 30000 | 17295 |
| 5.1 | 3725 | 1.4 | 187.24 | B143 | TH/TBH112M6 | 40000 | 40000 |

# 5.1 B/BA MOTORIDUTTORE (50Hz)



## 2.20 kW

| n2 [rpm] | M2 [Nm] | fs | i | Riduttore | Motore | Fr2 D-S-P [N] | Fr2 C [N] |
|---|---|---|---|---|---|---|---|
| 5.1 | 3725 | 1.4 | 187.24 | B143 | TP/TBP112M6 | 40000 | 40000 |
| 5.0 | 3845 | 1.4 | 187.24 | B143 | TBS112MA6 | 40000 | 40000 |

## 3.00 kW

| n2 [rpm] | M2 [Nm] | fs | i | Riduttore | Motore | Fr2 D-S-P [N] | Fr2 C [N] |
|---|---|---|---|---|---|---|---|
| 347.0 | 76 | 3.5 | 8.36 | BA72 | TH/TBH100L2 | 3984 | 1992 |
| 347.0 | 76 | 3.5 | 8.36 | BA72 | TP/TBP100L2 | 3984 | 1992 |
| 343.4 | 76 | 3.4 | 8.36 | BA72 | TBS100LA2 | 3998 | 1999 |
| 288.3 | 91 | 2.9 | 10.06 | BA72 | TH/TBH100L2 | 4238 | 2119 |
| 288.3 | 91 | 2.9 | 10.06 | BA72 | TP/TBP100L2 | 4238 | 2119 |
| 285.3 | 92 | 2.9 | 10.06 | BA72 | TBS100LA2 | 4253 | 2127 |
| 253.7 | 102 | 2.9 | 5.71 | B063 | TP/TBP112MS4 | 7788 | 2225 |
| 250.2 | 103 | 2.8 | 5.71 | B063 | TH/TBH100LB4 | 7820 | 2234 |
| 248.5 | 104 | 2.8 | 5.71 | B063 | TBS100LB4 | 7836 | 2239 |
| 233.1 | 113 | 2.3 | 12.44 | BA72 | TH/TBH100L2 | 4550 | 2275 |
| 233.1 | 113 | 2.3 | 12.44 | BA72 | TP/TBP100L2 | 4550 | 2275 |
| 230.7 | 114 | 2.3 | 12.44 | BA72 | TBS100LA2 | 4565 | 2283 |
| 220.5 | 113 | 3.9 | 13.15 | B063 | TH/TBH100L2 | 8129 | 2322 |
| 220.5 | 113 | 3.9 | 13.15 | B063 | TP/TBP100L2 | 8129 | 2322 |
| 218.2 | 114 | 3.9 | 13.15 | B063 | TBS100LA2 | 8153 | 2329 |
| 210.8 | 122 | 2.8 | 6.88 | B063 | TP/TBP112MS4 | 8215 | 2347 |
| 207.9 | 124 | 2.7 | 6.88 | B063 | TH/TBH100LB4 | 8248 | 2357 |
| 206.4 | 125 | 2.7 | 6.88 | B063 | TBS100LB4 | 8264 | 2361 |
| 198.0 | 130 | 2.7 | 7.32 | B063 | TP/TBP112MS4 | 8362 | 2389 |
| 195.3 | 132 | 2.7 | 7.32 | B063 | TH/TBH100LB4 | 8395 | 2399 |
| 194.5 | 135 | 2.3 | 14.91 | BA72 | TH/TBH100L2 | 4832 | 2416 |
| 194.5 | 135 | 2.3 | 14.91 | BA72 | TP/TBP100L2 | 4832 | 2416 |
| 193.9 | 133 | 2.6 | 7.32 | B063 | TBS100LB4 | 8412 | 2403 |
| 192.5 | 136 | 2.3 | 14.91 | BA72 | TBS100LA2 | 4849 | 2424 |
| 191.1 | 130 | 3.4 | 15.18 | B063 | TH/TBH100L2 | 8468 | 2419 |
| 191.1 | 130 | 3.4 | 15.18 | B063 | TP/TBP100L2 | 8468 | 2419 |
| 189.1 | 132 | 3.4 | 15.18 | B063 | TBS100LA2 | 8493 | 2427 |
| 185.7 | 139 | 3.6 | 7.81 | B083 | TP/TBP112MS4 | 13279 | 3794 |
| 183.1 | 141 | 3.6 | 7.81 | B083 | TH/TBH100LB4 | 13335 | 3810 |
| 181.8 | 142 | 3.5 | 7.81 | B083 | TBS100LB4 | 13363 | 3818 |
| 173.5 | 157 | 2.2 | 8.36 | BA72 | TP/TBP112MS4 | 5020 | 2510 |
| 171.1 | 159 | 2.2 | 8.36 | BA72 | TH/TBH100LB4 | 5043 | 2522 |
| 170.6 | 146 | 3.1 | 17.00 | B063 | TH/TBH100L2 | 8743 | 2498 |
| 170.6 | 146 | 3.1 | 17.00 | B063 | TP/TBP100L2 | 8743 | 2498 |
| 169.9 | 160 | 2.2 | 8.36 | BA72 | TBS100LB4 | 5055 | 2528 |

# 5.1 B/BA MOTORIDUTTORE (50Hz)



## 3.00 kW

| n2 [rpm] | M2 [Nm] | fs | i | Riduttore | Motore | Fr2 D-S-P [N] | Fr2 C [N] |
|---|---|---|---|---|---|---|---|
| 168.8 | 147 | 3.1 | 17.00 | B063 | TBS100LA2 | 8769 | 2505 |
| 168.2 | 153 | 3.9 | 8.62 | B083 | TP/TBP112MS4 | 13681 | 3909 |
| 165.8 | 155 | 3.9 | 8.62 | B083 | TH/TBH100LB4 | 13738 | 3925 |
| 164.7 | 157 | 3.8 | 8.62 | B083 | TBS100LB4 | 13767 | 3933 |
| 162.7 | 160 | 1.9 | 5.71 | B063 | TBS112MB6 | 8827 | 2522 |
| 161.6 | 163 | 1.9 | 17.94 | BA72 | TH/TBH100L2 | 5140 | 2570 |
| 161.6 | 163 | 1.9 | 17.94 | BA72 | TP/TBP100L2 | 5140 | 2570 |
| 160.0 | 164 | 1.9 | 17.94 | BA72 | TBS100LA2 | 5158 | 2579 |
| 158.3 | 163 | 2.8 | 9.16 | B063 | TP/TBP112MS4 | 8901 | 2543 |
| 156.1 | 165 | 2.8 | 9.16 | B063 | TH/TBH100LB4 | 8935 | 2553 |
| 155.0 | 166 | 2.8 | 9.16 | B063 | TBS100LB4 | 8953 | 2558 |
| 144.1 | 189 | 1.9 | 10.06 | BA72 | TP/TBP112MS4 | 5340 | 2670 |
| 142.2 | 191 | 1.8 | 10.06 | BA72 | TH/TBH100LB4 | 5365 | 2682 |
| 141.3 | 183 | 2.8 | 10.26 | B063 | TP/TBP112MS4 | 9181 | 2623 |
| 141.2 | 193 | 1.8 | 10.06 | BA72 | TBS100LB4 | 5377 | 2689 |
| 139.3 | 185 | 2.8 | 10.26 | B063 | TH/TBH100LB4 | 9216 | 2633 |
| 138.4 | 186 | 2.8 | 10.26 | B063 | TBS100LB4 | 9233 | 2638 |
| 138.2 | 187 | 3.5 | 10.49 | B083 | TP/TBP112MS4 | 14504 | 4144 |
| 136.3 | 189 | 3.4 | 10.49 | B083 | TH/TBH100LB4 | 14563 | 4161 |
| 135.3 | 191 | 3.4 | 10.49 | B083 | TBS100LB4 | 14593 | 4170 |
| 135.2 | 193 | 1.9 | 6.88 | B063 | TBS112MB6 | 9282 | 2652 |
| 131.5 | 196 | 2.8 | 11.03 | B063 | TP/TBP112MS4 | 9360 | 2674 |
| 130.7 | 201 | 1.6 | 22.19 | BA72 | TH/TBH100L2 | 5518 | 2759 |
| 130.7 | 201 | 1.6 | 22.19 | BA72 | TP/TBP100L2 | 5518 | 2759 |
| 129.7 | 199 | 2.7 | 11.03 | B063 | TH/TBH100LB4 | 9394 | 2684 |
| 129.5 | 192 | 2.3 | 22.39 | B063 | TH/TBH100L2 | 9429 | 2694 |
| 129.5 | 192 | 2.3 | 22.39 | B063 | TP/TBP100L2 | 9429 | 2694 |
| 129.3 | 203 | 1.6 | 22.19 | BA72 | TBS100LA2 | 5537 | 2768 |
| 128.8 | 200 | 2.7 | 11.03 | B063 | TBS100LB4 | 9412 | 2689 |
| 128.2 | 194 | 2.3 | 22.39 | B063 | TBS100LA2 | 9455 | 2702 |
| 127.1 | 196 | 3.3 | 22.82 | B083 | TH/TBH100L2 | 14894 | 4255 |
| 127.1 | 196 | 3.3 | 22.82 | B083 | TP/TBP100L2 | 14894 | 4255 |
| 127.0 | 205 | 1.8 | 7.32 | B063 | TBS112MB6 | 9437 | 2696 |
| 125.8 | 198 | 3.2 | 22.82 | B083 | TBS100LA2 | 14939 | 4268 |
| 125.1 | 206 | 3.6 | 11.59 | B083 | TP/TBP112MS4 | 14932 | 4266 |
| 124.2 | 210 | 2.5 | 7.81 | B083 | TH/TBH132S6 | 14957 | 4273 |
| 124.2 | 210 | 2.5 | 7.81 | B083 | TP/TBP132S6 | 14957 | 4273 |
| 123.4 | 209 | 3.6 | 11.59 | B083 | TH/TBH100LB4 | 14993 | 4284 |
| 122.9 | 212 | 2.5 | 7.81 | B083 | TBS132SA6 | 15002 | 4286 |
| 122.5 | 210 | 3.6 | 11.59 | B083 | TBS100LB4 | 15024 | 4293 |
| 119.4 | 218 | 3.8 | 8.13 | B103 | TH/TBH132S6 | 18751 | 5357 |

# 5.1 B/BA MOTORIDUTTORE (50Hz)



## 3.00 kW

| n2 [rpm] | M2 [Nm] | fs | i | Riduttore | Motore | Fr2 D-S-P [N] | Fr2 C [N] |
|---|---|---|---|---|---|---|---|
| 119.4 | 218 | 3.8 | 8.13 | B103 | TP/TBP132S6 | 18751 | 5357 |
| 119.1 | 219 | 2.4 | 7.81 | B083 | TBS112MB6 | 15141 | 4326 |
| 118.1 | 220 | 3.8 | 8.13 | B103 | TBS132SA6 | 18811 | 5375 |
| 117.4 | 220 | 2.6 | 12.35 | B063 | TP/TBP112MS4 | 9645 | 2756 |
| 116.5 | 234 | 1.5 | 12.44 | BA72 | TP/TBP112MS4 | 5732 | 2866 |
| 115.7 | 223 | 2.6 | 12.35 | B063 | TH/TBH100LB4 | 9680 | 2766 |
| 114.9 | 224 | 2.6 | 12.35 | B063 | TBS100LB4 | 9697 | 2771 |
| 114.9 | 237 | 1.5 | 12.44 | BA72 | TH/TBH100LB4 | 5759 | 2879 |
| 114.4 | 228 | 3.7 | 8.13 | B103 | TBS112MB6 | 18995 | 5427 |
| 114.1 | 238 | 1.5 | 12.44 | BA72 | TBS100LB4 | 5772 | 2886 |
| 112.5 | 232 | 2.7 | 8.62 | B083 | TH/TBH132S6 | 15394 | 4398 |
| 112.5 | 232 | 2.7 | 8.62 | B083 | TP/TBP132S6 | 15394 | 4398 |
| 111.3 | 234 | 2.7 | 8.62 | B083 | TBS132SA6 | 15440 | 4411 |
| 111.3 | 247 | 1.5 | 8.36 | BA72 | TBS112MB6 | 5821 | 2910 |
| 111.2 | 224 | 2.0 | 26.09 | B063 | TH/TBH100L2 | 9819 | 2805 |
| 111.2 | 224 | 2.0 | 26.09 | B063 | TP/TBP100L2 | 9819 | 2805 |
| 110.3 | 234 | 2.5 | 13.15 | B063 | TP/TBP112MS4 | 9802 | 2801 |
| 110.0 | 226 | 2.0 | 26.09 | B063 | TBS100LA2 | 9845 | 2813 |
| 108.7 | 237 | 2.5 | 13.15 | B063 | TH/TBH100LB4 | 9837 | 2811 |
| 108.6 | 229 | 2.8 | 26.71 | B083 | TH/TBH100L2 | 15596 | 4456 |
| 108.6 | 229 | 2.8 | 26.71 | B083 | TP/TBP100L2 | 15596 | 4456 |
| 108.2 | 241 | 3.9 | 8.97 | B103 | TH/TBH132S6 | 19326 | 5522 |
| 108.2 | 241 | 3.9 | 8.97 | B103 | TP/TBP132S6 | 19326 | 5522 |
| 108.0 | 239 | 2.5 | 13.15 | B063 | TBS100LB4 | 9855 | 2816 |
| 107.9 | 241 | 2.6 | 8.62 | B083 | TBS112MB6 | 15582 | 4452 |
| 107.4 | 232 | 2.8 | 26.71 | B083 | TBS100LA2 | 15643 | 4469 |
| 107.1 | 243 | 3.9 | 8.97 | B103 | TBS132SA6 | 19387 | 5539 |
| 105.6 | 249 | 1.3 | 27.45 | BA72 | TH/TBH100L2 | 5923 | 2961 |
| 105.6 | 249 | 1.3 | 27.45 | BA72 | TP/TBP100L2 | 5923 | 2961 |
| 104.6 | 251 | 1.3 | 27.45 | BA72 | TBS100LA2 | 5943 | 2972 |
| 103.7 | 251 | 3.8 | 8.97 | B103 | TBS112MB6 | 19576 | 5593 |
| 103.5 | 241 | 1.9 | 28.03 | B063 | TH/TBH100L2 | 10003 | 2858 |
| 103.5 | 241 | 1.9 | 28.03 | B063 | TP/TBP100L2 | 10003 | 2858 |
| 102.4 | 243 | 1.9 | 28.03 | B063 | TBS100LA2 | 10030 | 2866 |
| 101.5 | 257 | 1.9 | 9.16 | B063 | TBS112MB6 | 10000 | 2857 |
| 100.5 | 257 | 3.2 | 14.43 | B083 | TP/TBP112MS4 | 15911 | 4546 |
| 99.1 | 260 | 3.1 | 14.43 | B083 | TH/TBH100LB4 | 15975 | 4564 |
| 98.4 | 262 | 3.1 | 14.43 | B083 | TBS100LB4 | 16007 | 4573 |
| 98.3 | 253 | 2.5 | 29.50 | B083 | TH/TBH100L2 | 16048 | 4585 |
| 98.3 | 253 | 2.5 | 29.50 | B083 | TP/TBP100L2 | 16048 | 4585 |
| 97.3 | 256 | 2.5 | 29.50 | B083 | TBS100LA2 | 16096 | 4599 |

# 5.1 B/BA MOTORIDUTTORE (50Hz)



## 3.00 kW

| n2 [rpm] | M2 [Nm] | fs | i | Riduttore | Motore | Fr2 D-S-P [N] | Fr2 C [N] |
|---|---|---|---|---|---|---|---|
| 97.3 | 280 | 1.5 | 14.91 | BA72 | TP/TBP112MS4 | 6088 | 3044 |
| 95.9 | 284 | 1.5 | 14.91 | BA72 | TH/TBH100LB4 | 6116 | 3058 |
| 95.5 | 270 | 2.2 | 15.18 | B063 | TP/TBP112MS4 | 10165 | 2904 |
| 95.3 | 286 | 1.5 | 14.91 | BA72 | TBS100LB4 | 6131 | 3065 |
| 94.2 | 274 | 2.2 | 15.18 | B063 | TH/TBH100LB4 | 10200 | 2914 |
| 93.6 | 276 | 2.1 | 15.18 | B063 | TBS100LB4 | 10218 | 2919 |
| 92.4 | 282 | 2.4 | 10.49 | B083 | TH/TBH132S6 | 16284 | 4652 |
| 92.4 | 282 | 2.4 | 10.49 | B083 | TP/TBP132S6 | 16284 | 4652 |
| 92.4 | 297 | 1.2 | 10.06 | BA72 | TBS112MB6 | 6192 | 3096 |
| 91.5 | 285 | 2.4 | 10.49 | B083 | TBS132SA6 | 16331 | 4666 |
| 91.2 | 273 | 2.3 | 31.80 | B083 | TH/TBH100L2 | 16397 | 4685 |
| 91.2 | 273 | 2.3 | 31.80 | B083 | TP/TBP100L2 | 16397 | 4685 |
| 90.6 | 287 | 1.9 | 10.26 | B063 | TBS112MB6 | 10287 | 2939 |
| 90.3 | 276 | 2.3 | 31.80 | B083 | TBS100LA2 | 16446 | 4699 |
| 88.8 | 293 | 3.6 | 10.92 | B103 | TH/TBH132S6 | 20520 | 5863 |
| 88.8 | 293 | 3.6 | 10.92 | B103 | TP/TBP132S6 | 20520 | 5863 |
| 88.6 | 294 | 2.3 | 10.49 | B083 | TBS112MB6 | 16478 | 4708 |
| 87.9 | 296 | 3.5 | 10.92 | B103 | TBS132SA6 | 20585 | 5881 |
| 87.8 | 299 | 1.1 | 33.04 | BA72 | TH/TBH100L2 | 6300 | 3150 |
| 87.8 | 299 | 1.1 | 33.04 | BA72 | TP/TBP100L2 | 6300 | 3150 |
| 87.4 | 295 | 2.9 | 16.60 | B083 | TP/TBP112MS4 | 16556 | 4730 |
| 86.9 | 302 | 1.0 | 33.04 | BA72 | TBS100LA2 | 6322 | 3161 |
| 86.7 | 287 | 1.6 | 33.43 | B063 | TH/TBH100L2 | 10458 | 2988 |
| 86.7 | 287 | 1.6 | 33.43 | B063 | TP/TBP100L2 | 10458 | 2988 |
| 86.2 | 299 | 2.8 | 16.60 | B083 | TH/TBH100LB4 | 16621 | 4749 |
| 85.8 | 290 | 1.6 | 33.43 | B063 | TBS100LA2 | 10484 | 2996 |
| 85.6 | 301 | 2.8 | 16.60 | B083 | TBS100LB4 | 16654 | 4758 |
| 85.3 | 302 | 2.0 | 17.00 | B063 | TP/TBP112MS4 | 10454 | 2987 |
| 85.2 | 306 | 3.4 | 10.92 | B103 | TBS112MB6 | 20783 | 5938 |
| 84.3 | 309 | 1.8 | 11.03 | B063 | TBS112MB6 | 10468 | 2991 |
| 84.1 | 307 | 2.0 | 17.00 | B063 | TH/TBH100LB4 | 10489 | 2997 |
| 84.1 | 296 | 2.2 | 34.49 | B083 | TH/TBH100L2 | 16780 | 4794 |
| 84.1 | 296 | 2.2 | 34.49 | B083 | TP/TBP100L2 | 16780 | 4794 |
| 83.7 | 311 | 2.5 | 11.59 | B083 | TH/TBH132S6 | 16744 | 4784 |
| 83.7 | 311 | 2.5 | 11.59 | B083 | TP/TBP132S6 | 16744 | 4784 |
| 83.5 | 309 | 1.9 | 17.00 | B063 | TBS100LB4 | 10507 | 3002 |
| 83.2 | 299 | 2.1 | 34.49 | B083 | TBS100LA2 | 16829 | 4808 |
| 82.9 | 314 | 2.5 | 11.59 | B083 | TBS132SA6 | 16793 | 4798 |
| 80.8 | 337 | 1.2 | 17.94 | BA72 | TP/TBP112MS4 | 6476 | 3238 |
| 80.5 | 324 | 3.2 | 12.05 | B103 | TH/TBH132S6 | 21138 | 6039 |
| 80.5 | 324 | 3.2 | 12.05 | B103 | TP/TBP132S6 | 21138 | 6039 |

# 5.1 B/BA MOTORIDUTTORE (50Hz)



## 3.00 kW

| n2 [rpm] | M2 [Nm] | fs | i | Riduttore | Motore | Fr2 D-S-P [N] | Fr2 C [N] |
|---|---|---|---|---|---|---|---|
| 80.3 | 324 | 2.4 | 11.59 | B083 | TBS112MB6 | 16942 | 4841 |
| 79.7 | 327 | 3.2 | 12.05 | B103 | TBS132SA6 | 21204 | 6058 |
| 79.7 | 342 | 1.2 | 17.94 | BA72 | TH/TBH100LB4 | 6506 | 3253 |
| 79.1 | 326 | 2.6 | 18.32 | B083 | TP/TBP112MS4 | 17022 | 4863 |
| 79.1 | 344 | 1.2 | 17.94 | BA72 | TBS100LB4 | 6521 | 3261 |
| 78.0 | 330 | 2.6 | 18.32 | B083 | TH/TBH100LB4 | 17088 | 4882 |
| 77.5 | 333 | 2.6 | 18.32 | B083 | TBS100LB4 | 17121 | 4892 |
| 77.2 | 337 | 3.1 | 12.05 | B103 | TBS112MB6 | 21407 | 6116 |
| 75.3 | 346 | 1.8 | 12.35 | B063 | TBS112MB6 | 10754 | 3073 |
| 75.2 | 331 | 1.4 | 38.58 | B063 | TH/TBH100L2 | 10827 | 3093 |
| 75.2 | 331 | 1.4 | 38.58 | B063 | TP/TBP100L2 | 10827 | 3093 |
| 74.7 | 368 | 1.0 | 12.44 | BA72 | TBS112MB6 | 6647 | 3323 |
| 74.4 | 334 | 1.3 | 38.58 | B063 | TBS100LA2 | 10854 | 3101 |
| 73.2 | 340 | 1.9 | 39.60 | B083 | TH/TBH100L2 | 17440 | 4983 |
| 73.2 | 340 | 1.9 | 39.60 | B083 | TP/TBP100L2 | 17440 | 4983 |
| 72.5 | 343 | 1.9 | 39.60 | B083 | TBS100LA2 | 17490 | 4997 |
| 70.7 | 368 | 1.7 | 13.15 | B063 | TBS112MB6 | 10910 | 3117 |
| 70.5 | 353 | 3.6 | 41.12 | B103 | TH/TBH100L2 | 22000 | 6297 |
| 70.5 | 353 | 3.6 | 41.12 | B103 | TP/TBP100L2 | 22000 | 6297 |
| 69.8 | 357 | 3.6 | 41.12 | B103 | TBS100LA2 | 22000 | 6316 |
| 67.5 | 369 | 1.7 | 42.95 | B083 | TH/TBH100L2 | 17836 | 5096 |
| 67.5 | 369 | 1.7 | 42.95 | B083 | TP/TBP100L2 | 17836 | 5096 |
| 67.2 | 387 | 2.2 | 14.43 | B083 | TH/TBH132S6 | 17787 | 5082 |
| 67.2 | 387 | 2.2 | 14.43 | B083 | TP/TBP132S6 | 17787 | 5082 |
| 67.1 | 371 | 1.2 | 43.22 | B063 | TH/TBH100L2 | 11118 | 3177 |
| 67.1 | 371 | 1.2 | 43.22 | B063 | TP/TBP100L2 | 11118 | 3177 |
| 66.8 | 372 | 1.7 | 42.95 | B083 | TBS100LA2 | 17886 | 5110 |
| 66.5 | 391 | 2.2 | 14.43 | B083 | TBS132SA6 | 17837 | 5096 |
| 66.4 | 375 | 1.2 | 43.22 | B063 | TBS100LA2 | 11144 | 3184 |
| 65.3 | 417 | 1.0 | 22.19 | BA72 | TP/TBP112MS4 | 6952 | 3476 |
| 65.0 | 383 | 3.3 | 44.61 | B103 | TH/TBH100L2 | 22000 | 6451 |
| 65.0 | 383 | 3.3 | 44.61 | B103 | TP/TBP100L2 | 22000 | 6451 |
| 64.8 | 398 | 1.5 | 22.39 | B063 | TP/TBP112MS4 | 11145 | 3184 |
| 64.7 | 402 | 3.1 | 14.99 | B103 | TH/TBH132S6 | 22000 | 6445 |
| 64.7 | 402 | 3.1 | 14.99 | B103 | TP/TBP132S6 | 22000 | 6445 |
| 64.5 | 404 | 2.1 | 14.43 | B083 | TBS112MB6 | 17990 | 5140 |
| 64.4 | 422 | 1.0 | 22.19 | BA72 | TH/TBH100LB4 | 6984 | 3492 |
| 64.3 | 387 | 3.3 | 44.61 | B103 | TBS100LA2 | 22000 | 6471 |
| 64.1 | 407 | 3.1 | 14.99 | B103 | TBS132SA6 | 22000 | 6465 |
| 64.0 | 425 | 1.0 | 22.19 | BA72 | TBS100LB4 | 7000 | 3500 |
| 63.9 | 404 | 1.5 | 22.39 | B063 | TH/TBH100LB4 | 11180 | 3194 |

# 5.1 B/BA MOTORIDUTTORE (50Hz)



## 3.00 kW

| n2 [rpm] | M2 [Nm] | fs | i | Riduttore | Motore | Fr2 D-S-P [N] | Fr2 C [N] |
|---|---|---|---|---|---|---|---|
| 63.8 | 390 | 1.6 | 45.44 | B083 | TH/TBH100L2 | 18000 | 5175 |
| 63.8 | 390 | 1.6 | 45.44 | B083 | TP/TBP100L2 | 18000 | 5175 |
| 63.5 | 406 | 2.1 | 22.82 | B083 | TP/TBP112MS4 | 18000 | 5164 |
| 63.4 | 407 | 1.5 | 22.39 | B063 | TBS100LB4 | 11197 | 3199 |
| 63.2 | 394 | 1.6 | 45.44 | B083 | TBS100LA2 | 18000 | 5189 |
| 62.7 | 411 | 2.1 | 22.82 | B083 | TH/TBH100LB4 | 18000 | 5184 |
| 62.4 | 441 | 1.0 | 14.91 | BA72 | TBS112MB6 | 7059 | 3530 |
| 62.2 | 414 | 2.1 | 22.82 | B083 | TBS100LB4 | 18000 | 5193 |
| 62.1 | 420 | 3.0 | 14.99 | B103 | TBS112MB6 | 22000 | 6526 |
| 61.3 | 425 | 1.5 | 15.18 | B063 | TBS112MB6 | 11262 | 3218 |
| 61.3 | 406 | 3.1 | 47.28 | B103 | TH/TBH100L2 | 22000 | 6564 |
| 61.3 | 406 | 3.1 | 47.28 | B103 | TP/TBP100L2 | 22000 | 6564 |
| 61.2 | 421 | 3.3 | 23.70 | B103 | TP/TBP112MS4 | 22000 | 6556 |
| 60.7 | 410 | 3.1 | 47.28 | B103 | TBS100LA2 | 22000 | 6584 |
| 60.3 | 427 | 3.3 | 23.70 | B103 | TH/TBH100LB4 | 22000 | 6583 |
| 59.9 | 430 | 3.3 | 23.70 | B103 | TBS100LB4 | 22000 | 6597 |
| 58.5 | 446 | 2.0 | 16.60 | B083 | TH/TBH132S6 | 18000 | 5276 |
| 58.5 | 446 | 2.0 | 16.60 | B083 | TP/TBP132S6 | 18000 | 5276 |
| 57.8 | 450 | 2.0 | 16.60 | B083 | TBS132SA6 | 18000 | 5290 |
| 57.7 | 431 | 3.0 | 50.24 | B103 | TH/TBH100L2 | 22000 | 6683 |
| 57.7 | 431 | 3.0 | 50.24 | B103 | TP/TBP100L2 | 22000 | 6683 |
| 57.1 | 436 | 1.0 | 50.81 | B063 | TH/TBH100L2 | 11525 | 3293 |
| 57.1 | 436 | 1.0 | 50.81 | B063 | TP/TBP100L2 | 11525 | 3293 |
| 57.1 | 436 | 2.9 | 50.24 | B103 | TBS100LA2 | 22000 | 6703 |
| 56.7 | 439 | 1.5 | 51.19 | B083 | TH/TBH100L2 | 18000 | 5343 |
| 56.7 | 439 | 1.5 | 51.19 | B083 | TP/TBP100L2 | 18000 | 5343 |
| 56.5 | 441 | 1.0 | 50.81 | B063 | TBS100LA2 | 11551 | 3300 |
| 56.2 | 464 | 3.2 | 17.27 | B103 | TH/TBH132S6 | 22000 | 6719 |
| 56.2 | 464 | 3.2 | 17.27 | B103 | TP/TBP132S6 | 22000 | 6719 |
| 56.1 | 444 | 1.4 | 51.19 | B083 | TBS100LA2 | 18000 | 5358 |
| 56.0 | 465 | 1.9 | 16.60 | B083 | TBS112MB6 | 18000 | 5335 |
| 55.6 | 464 | 1.3 | 26.09 | B063 | TP/TBP112MS4 | 11518 | 3291 |
| 55.6 | 469 | 3.1 | 17.27 | B103 | TBS132SA6 | 22000 | 6740 |
| 54.8 | 470 | 1.3 | 26.09 | B063 | TH/TBH100LB4 | 11551 | 3300 |
| 54.7 | 476 | 1.3 | 17.00 | B063 | TBS112MB6 | 11535 | 3296 |
| 54.7 | 455 | 2.8 | 53.02 | B103 | TH/TBH100L2 | 22000 | 6789 |
| 54.7 | 455 | 2.8 | 53.02 | B103 | TP/TBP100L2 | 22000 | 6789 |
| 54.7 | 471 | 3.2 | 26.51 | B103 | TP/TBP112MS4 | 22000 | 6776 |
| 54.4 | 474 | 1.3 | 26.09 | B063 | TBS100LB4 | 11568 | 3305 |
| 54.3 | 475 | 1.8 | 26.71 | B083 | TP/TBP112MS4 | 18000 | 5385 |
| 54.1 | 460 | 2.8 | 53.02 | B103 | TBS100LA2 | 22000 | 6810 |

# 5.1 B/BA MOTORIDUTTORE (50Hz)



## 3.00 kW

| n2 [rpm] | M2 [Nm] | fs | i | Riduttore | Motore | Fr2 D-S-P [N] | Fr2 C [N] |
|---|---|---|---|---|---|---|---|
| 53.9 | 484 | 3.0 | 17.27 | B103 | TBS112MB6 | 22000 | 6802 |
| 53.9 | 478 | 3.1 | 26.51 | B103 | TH/TBH100LB4 | 22000 | 6803 |
| 53.6 | 481 | 3.1 | 26.51 | B103 | TBS100LB4 | 22000 | 6817 |
| 53.5 | 482 | 1.8 | 26.71 | B083 | TH/TBH100LB4 | 18000 | 5405 |
| 53.2 | 485 | 1.8 | 26.71 | B083 | TBS100LB4 | 18000 | 5415 |
| 52.9 | 492 | 1.8 | 18.32 | B083 | TH/TBH132S6 | 18000 | 5415 |
| 52.9 | 492 | 1.8 | 18.32 | B083 | TP/TBP132S6 | 18000 | 5415 |
| 52.4 | 497 | 1.8 | 18.32 | B083 | TBS132SA6 | 18000 | 5429 |
| 52.2 | 476 | 1.3 | 55.52 | B083 | TH/TBH100L2 | 18000 | 5459 |
| 52.2 | 476 | 1.3 | 55.52 | B083 | TP/TBP100L2 | 18000 | 5459 |
| 51.7 | 498 | 1.2 | 28.03 | B063 | TP/TBP112MS4 | 11689 | 3340 |
| 51.7 | 481 | 1.3 | 55.52 | B083 | TBS100LA2 | 18000 | 5474 |
| 51.0 | 505 | 1.2 | 28.03 | B063 | TH/TBH100LB4 | 11721 | 3349 |
| 50.9 | 512 | 2.9 | 19.06 | B103 | TH/TBH132S6 | 22000 | 6914 |
| 50.9 | 512 | 2.9 | 19.06 | B103 | TP/TBP132S6 | 22000 | 6914 |
| 50.8 | 513 | 1.7 | 18.32 | B083 | TBS112MB6 | 18000 | 5474 |
| 50.7 | 509 | 1.2 | 28.03 | B063 | TBS100LB4 | 11738 | 3354 |
| 50.4 | 517 | 2.8 | 19.06 | B103 | TBS132SA6 | 22000 | 6935 |
| 49.6 | 502 | 2.5 | 58.50 | B103 | TH/TBH100L2 | 22000 | 6987 |
| 49.6 | 502 | 2.5 | 58.50 | B103 | TP/TBP100L2 | 22000 | 6987 |
| 49.2 | 525 | 1.6 | 29.50 | B083 | TP/TBP112MS4 | 18000 | 5525 |
| 49.1 | 507 | 2.5 | 58.50 | B103 | TBS100LA2 | 22000 | 7008 |
| 48.8 | 534 | 2.8 | 19.06 | B103 | TBS112MB6 | 22000 | 6999 |
| 48.5 | 532 | 1.6 | 29.50 | B083 | TH/TBH100LB4 | 18000 | 5545 |
| 48.4 | 514 | 1.2 | 59.96 | B083 | TH/TBH100L2 | 18000 | 5570 |
| 48.4 | 514 | 1.2 | 59.96 | B083 | TP/TBP100L2 | 18000 | 5570 |
| 48.1 | 536 | 1.6 | 29.50 | B083 | TBS100LB4 | 18000 | 5555 |
| 47.9 | 520 | 1.2 | 59.96 | B083 | TBS100LA2 | 18000 | 5585 |
| 47.5 | 543 | 2.9 | 30.55 | B103 | TP/TBP112MS4 | 22000 | 7060 |
| 46.8 | 551 | 2.9 | 30.55 | B103 | TH/TBH100LB4 | 22000 | 7088 |
| 46.5 | 555 | 2.9 | 30.55 | B103 | TBS100LB4 | 22000 | 7103 |
| 45.6 | 565 | 1.5 | 31.80 | B083 | TP/TBP112MS4 | 18000 | 5632 |
| 45.5 | 547 | 1.2 | 63.74 | B083 | TH/TBH100L2 | 18000 | 5658 |
| 45.5 | 547 | 1.2 | 63.74 | B083 | TP/TBP100L2 | 18000 | 5658 |
| 45.0 | 553 | 1.2 | 63.74 | B083 | TBS100LA2 | 18000 | 5673 |
| 45.0 | 573 | 1.5 | 31.80 | B083 | TH/TBH100LB4 | 18000 | 5651 |
| 44.7 | 577 | 1.5 | 31.80 | B083 | TBS100LB4 | 18000 | 5661 |
| 44.7 | 557 | 2.3 | 64.89 | B103 | TH/TBH100L2 | 22000 | 7199 |
| 44.7 | 557 | 2.3 | 64.89 | B103 | TP/TBP100L2 | 22000 | 7199 |
| 44.2 | 563 | 2.3 | 64.89 | B103 | TBS100LA2 | 22000 | 7221 |
| 43.9 | 588 | 2.9 | 33.07 | B103 | TP/TBP112MS4 | 22000 | 7222 |

# 5.1 B/BA MOTORIDUTTORE (50Hz)



## 3.00 kW

| n2 [rpm] | M2 [Nm] | fs | i | Riduttore | Motore | Fr2 D-S-P [N] | Fr2 C [N] |
|---|---|---|---|---|---|---|---|
| 43.4 | 595 | 1.0 | 33.43 | B063 | TP/TBP112MS4 | 12000 | 3454 |
| 43.2 | 596 | 2.9 | 33.07 | B103 | TH/TBH100LB4 | 22000 | 7250 |
| 42.9 | 600 | 2.8 | 33.07 | B103 | TBS100LB4 | 22000 | 7265 |
| 42.8 | 603 | 1.0 | 33.43 | B063 | TH/TBH100LB4 | 12000 | 3463 |
| 42.5 | 607 | 1.0 | 33.43 | B063 | TBS100LB4 | 12000 | 3467 |
| 42.5 | 613 | 1.5 | 22.82 | B083 | TH/TBH132S6 | 18000 | 5725 |
| 42.5 | 613 | 1.5 | 22.82 | B083 | TP/TBP132S6 | 18000 | 5725 |
| 42.3 | 588 | 2.2 | 68.58 | B103 | TH/TBH100L2 | 22000 | 7314 |
| 42.3 | 588 | 2.2 | 68.58 | B103 | TP/TBP100L2 | 22000 | 7314 |
| 42.1 | 619 | 1.4 | 22.82 | B083 | TBS132SA6 | 18000 | 5739 |
| 42.0 | 613 | 1.4 | 34.49 | B083 | TP/TBP112MS4 | 18000 | 5747 |
| 41.9 | 593 | 1.1 | 69.14 | B083 | TH/TBH100L2 | 18000 | 5775 |
| 41.9 | 593 | 1.1 | 69.14 | B083 | TP/TBP100L2 | 18000 | 5775 |
| 41.9 | 595 | 2.1 | 68.58 | B103 | TBS100LA2 | 22000 | 7336 |
| 41.5 | 627 | 1.0 | 22.39 | B063 | TBS112MB6 | 12000 | 3473 |
| 41.5 | 622 | 1.4 | 34.49 | B083 | TH/TBH100LB4 | 18000 | 5767 |
| 41.5 | 599 | 1.1 | 69.14 | B083 | TBS100LA2 | 18000 | 5791 |
| 41.2 | 626 | 1.4 | 34.49 | B083 | TBS100LB4 | 18000 | 5777 |
| 40.9 | 636 | 2.3 | 23.70 | B103 | TH/TBH132S6 | 22000 | 7359 |
| 40.9 | 636 | 2.3 | 23.70 | B103 | TP/TBP132S6 | 22000 | 7359 |
| 40.8 | 639 | 1.4 | 22.82 | B083 | TBS112MB6 | 18000 | 5784 |
| 40.5 | 643 | 2.3 | 23.70 | B103 | TBS132SA6 | 22000 | 7381 |
| 40.4 | 638 | 2.7 | 35.87 | B103 | TP/TBP112MS4 | 22000 | 7390 |
| 39.9 | 647 | 2.6 | 35.87 | B103 | TH/TBH100LB4 | 22000 | 7419 |
| 39.9 | 624 | 2.0 | 72.76 | B103 | TH/TBH100L2 | 22000 | 7438 |
| 39.9 | 624 | 2.0 | 72.76 | B103 | TP/TBP100L2 | 22000 | 7438 |
| 39.6 | 628 | 1.0 | 73.14 | B083 | TH/TBH100L2 | 18000 | 5857 |
| 39.6 | 628 | 1.0 | 73.14 | B083 | TP/TBP100L2 | 18000 | 5857 |
| 39.6 | 651 | 2.6 | 35.87 | B103 | TBS100LB4 | 22000 | 7434 |
| 39.4 | 631 | 2.0 | 72.76 | B103 | TBS100LA2 | 22000 | 7460 |
| 39.2 | 634 | 1.0 | 73.14 | B083 | TBS100LA2 | 18000 | 5872 |
| 39.2 | 664 | 2.2 | 23.70 | B103 | TBS112MB6 | 22000 | 7447 |
| 36.7 | 677 | 1.9 | 78.92 | B103 | TH/TBH100L2 | 22000 | 7611 |
| 36.7 | 677 | 1.9 | 78.92 | B103 | TP/TBP100L2 | 22000 | 7611 |
| 36.6 | 704 | 1.2 | 39.60 | B083 | TP/TBP112MS4 | 18000 | 5943 |
| 36.6 | 712 | 2.2 | 26.51 | B103 | TH/TBH132S6 | 22000 | 7595 |
| 36.6 | 712 | 2.2 | 26.51 | B103 | TP/TBP132S6 | 22000 | 7595 |
| 36.4 | 684 | 1.9 | 78.92 | B103 | TBS100LA2 | 22000 | 7634 |
| 36.3 | 717 | 1.2 | 26.71 | B083 | TH/TBH132S6 | 18000 | 5947 |
| 36.3 | 717 | 1.2 | 26.71 | B083 | TP/TBP132S6 | 18000 | 5947 |
| 36.2 | 719 | 2.2 | 26.51 | B103 | TBS132SA6 | 22000 | 7616 |

# 5.1 B/BA MOTORIDUTTORE (50Hz)



## 3.00 kW

| n2 [rpm] | M2 [Nm] | fs | i | Riduttore | Motore | Fr2 D-S-P [N] | Fr2 C [N] |
|---|---|---|---|---|---|---|---|
| 36.2 | 687 | 3.8 | 80.04 | B123 | TH/TBH100L2 | 30000 | 10742 |
| 36.2 | 687 | 3.8 | 80.04 | B123 | TP/TBP100L2 | 30000 | 10742 |
| 36.1 | 714 | 1.2 | 39.60 | B083 | TH/TBH100LB4 | 18000 | 5963 |
| 35.9 | 719 | 1.2 | 39.60 | B083 | TBS100LB4 | 18000 | 5973 |
| 35.9 | 725 | 1.2 | 26.71 | B083 | TBS132SA6 | 18000 | 5962 |
| 35.9 | 694 | 3.8 | 80.04 | B123 | TBS100LA2 | 30000 | 10773 |
| 35.8 | 721 | 3.9 | 40.53 | B123 | TP/TBP112MS4 | 30000 | 10747 |
| 35.3 | 731 | 2.3 | 41.12 | B103 | TP/TBP112MS4 | 22000 | 7679 |
| 35.3 | 739 | 4.0 | 27.51 | B123 | TH/TBH132S6 | 30000 | 10779 |
| 35.3 | 739 | 4.0 | 27.51 | B123 | TP/TBP132S6 | 30000 | 10779 |
| 35.3 | 731 | 3.8 | 40.53 | B123 | TH/TBH100LB4 | 30000 | 10787 |
| 35.1 | 742 | 2.1 | 26.51 | B103 | TBS112MB6 | 22000 | 7684 |
| 35.0 | 736 | 3.8 | 40.53 | B123 | TBS100LB4 | 30000 | 10808 |
| 34.9 | 746 | 3.9 | 27.51 | B123 | TBS132SA6 | 30000 | 10809 |
| 34.8 | 748 | 1.2 | 26.71 | B083 | TBS112MB6 | 18000 | 6006 |
| 34.8 | 742 | 2.3 | 41.12 | B103 | TH/TBH100LB4 | 22000 | 7708 |
| 34.7 | 718 | 1.9 | 83.66 | B103 | TH/TBH100L2 | 22000 | 7737 |
| 34.7 | 718 | 1.9 | 83.66 | B103 | TP/TBP100L2 | 22000 | 7737 |
| 34.5 | 747 | 2.3 | 41.12 | B103 | TBS100LB4 | 22000 | 7723 |
| 34.3 | 725 | 1.9 | 83.66 | B103 | TBS100LA2 | 22000 | 7759 |
| 33.8 | 764 | 1.1 | 42.95 | B083 | TP/TBP112MS4 | 18000 | 6058 |
| 33.3 | 774 | 1.1 | 42.95 | B083 | TH/TBH100LB4 | 18000 | 6078 |
| 33.1 | 780 | 1.1 | 42.95 | B083 | TBS100LB4 | 18000 | 6088 |
| 32.9 | 792 | 1.1 | 29.50 | B083 | TH/TBH132S6 | 18000 | 6086 |
| 32.9 | 792 | 1.1 | 29.50 | B083 | TP/TBP132S6 | 18000 | 6086 |
| 32.5 | 800 | 1.1 | 29.50 | B083 | TBS132SA6 | 18000 | 6100 |
| 32.5 | 793 | 2.1 | 44.61 | B103 | TP/TBP112MS4 | 22000 | 7853 |
| 32.3 | 798 | 3.8 | 44.89 | B123 | TP/TBP112MS4 | 30000 | 11046 |
| 32.3 | 771 | 3.4 | 89.87 | B123 | TH/TBH100L2 | 30000 | 11085 |
| 32.3 | 771 | 3.4 | 89.87 | B123 | TP/TBP100L2 | 30000 | 11085 |
| 32.1 | 804 | 2.1 | 44.61 | B103 | TH/TBH100LB4 | 22000 | 7883 |
| 31.9 | 808 | 1.1 | 45.44 | B083 | TP/TBP112MS4 | 18000 | 6137 |
| 31.9 | 809 | 3.7 | 44.89 | B123 | TH/TBH100LB4 | 30000 | 11087 |
| 31.9 | 779 | 3.4 | 89.87 | B123 | TBS100LA2 | 30000 | 11116 |
| 31.8 | 810 | 2.1 | 44.61 | B103 | TBS100LB4 | 22000 | 7898 |
| 31.7 | 820 | 2.0 | 30.55 | B103 | TH/TBH132S6 | 22000 | 7897 |
| 31.7 | 820 | 2.0 | 30.55 | B103 | TP/TBP132S6 | 22000 | 7897 |
| 31.6 | 815 | 3.7 | 44.89 | B123 | TBS100LB4 | 30000 | 11107 |
| 31.5 | 826 | 1.1 | 29.50 | B083 | TBS112MB6 | 18000 | 6145 |
| 31.5 | 819 | 1.0 | 45.44 | B083 | TH/TBH100LB4 | 18000 | 6157 |
| 31.5 | 827 | 3.6 | 30.79 | B123 | TH/TBH132S6 | 30000 | 11109 |

# 5.1 B/BA MOTORIDUTTORE (50Hz)



## 3.00 kW

| n2 [rpm] | M2 [Nm] | fs | i | Riduttore | Motore | Fr2 D-S-P [N] | Fr2 C [N] |
|---|---|---|---|---|---|---|---|
| 31.5 | 827 | 3.6 | 30.79 | B123 | TP/TBP132S6 | 30000 | 11109 |
| 31.4 | 792 | 1.7 | 92.31 | B103 | TH/TBH100L2 | 22000 | 7950 |
| 31.4 | 792 | 1.7 | 92.31 | B103 | TP/TBP100L2 | 22000 | 7950 |
| 31.4 | 829 | 2.0 | 30.55 | B103 | TBS132SA6 | 22000 | 7920 |
| 31.3 | 825 | 1.0 | 45.44 | B083 | TBS100LB4 | 18000 | 6166 |
| 31.2 | 835 | 3.5 | 30.79 | B123 | TBS132SA6 | 30000 | 11139 |
| 31.1 | 800 | 1.7 | 92.31 | B103 | TBS100LA2 | 22000 | 7973 |
| 31.0 | 839 | 3.5 | 31.26 | B123 | TH/TBH132S6 | 30000 | 11153 |
| 31.0 | 839 | 3.5 | 31.26 | B123 | TP/TBP132S6 | 30000 | 11153 |
| 30.7 | 841 | 2.0 | 47.28 | B103 | TP/TBP112MS4 | 22000 | 7979 |
| 30.7 | 848 | 3.5 | 31.26 | B123 | TBS132SA6 | 30000 | 11184 |
| 30.5 | 854 | 1.0 | 31.80 | B083 | TH/TBH132S6 | 18000 | 6190 |
| 30.5 | 854 | 1.0 | 31.80 | B083 | TP/TBP132S6 | 18000 | 6190 |
| 30.4 | 856 | 2.0 | 30.55 | B103 | TBS112MB6 | 22000 | 7988 |
| 30.2 | 863 | 1.0 | 31.80 | B083 | TBS132SA6 | 18000 | 6205 |
| 30.2 | 853 | 2.0 | 47.28 | B103 | TH/TBH100LB4 | 22000 | 8009 |
| 30.0 | 859 | 2.0 | 47.28 | B103 | TBS100LB4 | 22000 | 8025 |
| 29.7 | 875 | 3.4 | 31.26 | B123 | TBS112MB6 | 30000 | 11278 |
| 29.3 | 888 | 2.0 | 33.07 | B103 | TH/TBH132S6 | 22000 | 8069 |
| 29.3 | 888 | 2.0 | 33.07 | B103 | TP/TBP132S6 | 22000 | 8069 |
| 29.2 | 890 | 1.0 | 31.80 | B083 | TBS112MB6 | 18000 | 6248 |
| 29.1 | 886 | 3.6 | 49.80 | B123 | TP/TBP112MS4 | 30000 | 11353 |
| 29.1 | 855 | 3.1 | 99.70 | B123 | TH/TBH100L2 | 30000 | 11396 |
| 29.1 | 855 | 3.1 | 99.70 | B123 | TP/TBP100L2 | 30000 | 11396 |
| 29.0 | 897 | 2.0 | 33.07 | B103 | TBS132SA6 | 22000 | 8091 |
| 28.9 | 893 | 1.9 | 50.24 | B103 | TP/TBP112MS4 | 22000 | 8111 |
| 28.8 | 864 | 3.0 | 99.70 | B123 | TBS100LA2 | 30000 | 11427 |
| 28.7 | 898 | 3.6 | 49.80 | B123 | TH/TBH100LB4 | 30000 | 11394 |
| 28.5 | 906 | 1.9 | 50.24 | B103 | TH/TBH100LB4 | 22000 | 8142 |
| 28.5 | 904 | 3.5 | 49.80 | B123 | TBS100LB4 | 30000 | 11415 |
| 28.3 | 910 | 0.9 | 51.19 | B083 | TP/TBP112MS4 | 18000 | 6302 |
| 28.3 | 912 | 1.9 | 50.24 | B103 | TBS100LB4 | 22000 | 8157 |
| 28.1 | 926 | 1.0 | 34.49 | B083 | TH/TBH132S6 | 18000 | 6302 |
| 28.1 | 926 | 1.0 | 34.49 | B083 | TP/TBP132S6 | 18000 | 6302 |
| 28.1 | 926 | 1.9 | 33.07 | B103 | TBS112MB6 | 22000 | 8160 |
| 28.0 | 931 | 3.2 | 34.68 | B123 | TH/TBH132S6 | 30000 | 11460 |
| 28.0 | 931 | 3.2 | 34.68 | B123 | TP/TBP132S6 | 30000 | 11460 |
| 27.9 | 923 | 0.9 | 51.19 | B083 | TH/TBH100LB4 | 18000 | 6322 |
| 27.8 | 936 | 1.0 | 34.49 | B083 | TBS132SA6 | 18000 | 6316 |
| 27.7 | 929 | 0.9 | 51.19 | B083 | TBS100LB4 | 18000 | 6331 |
| 27.7 | 941 | 3.1 | 34.68 | B123 | TBS132SA6 | 30000 | 11491 |

# 5.1 B/BA MOTORIDUTTORE (50Hz)



## 3.00 kW

| n2 [rpm] | M2 [Nm] | fs | i | Riduttore | Motore | Fr2 D-S-P [N] | Fr2 C [N] |
|---|---|---|---|---|---|---|---|
| 27.5 | 905 | 1.5 | 105.44 | B103 | TH/TBH100L2 | 22000 | 8244 |
| 27.5 | 905 | 1.5 | 105.44 | B103 | TP/TBP100L2 | 22000 | 8244 |
| 27.3 | 943 | 1.8 | 53.02 | B103 | TP/TBP112MS4 | 22000 | 8229 |
| 27.2 | 914 | 1.5 | 105.44 | B103 | TBS100LA2 | 22000 | 8267 |
| 27.2 | 915 | 2.9 | 106.65 | B123 | TH/TBH100L2 | 30000 | 11600 |
| 27.2 | 915 | 2.9 | 106.65 | B123 | TP/TBP100L2 | 30000 | 11600 |
| 27.0 | 966 | 0.9 | 34.49 | B083 | TBS112MB6 | 18000 | 6359 |
| 27.0 | 956 | 1.8 | 53.02 | B103 | TH/TBH100LB4 | 22000 | 8260 |
| 27.0 | 963 | 1.9 | 35.87 | B103 | TH/TBH132S6 | 22000 | 8246 |
| 27.0 | 963 | 1.9 | 35.87 | B103 | TP/TBP132S6 | 22000 | 8246 |
| 26.9 | 925 | 2.8 | 106.65 | B123 | TBS100LA2 | 30000 | 11631 |
| 26.8 | 973 | 1.8 | 35.87 | B103 | TBS132SA6 | 22000 | 8269 |
| 26.8 | 963 | 1.8 | 53.02 | B103 | TBS100LB4 | 22000 | 8275 |
| 26.8 | 971 | 3.0 | 34.68 | B123 | TBS112MB6 | 30000 | 11585 |
| 26.7 | 966 | 3.3 | 54.30 | B123 | TP/TBP112MS4 | 30000 | 11610 |
| 26.3 | 979 | 3.3 | 54.30 | B123 | TH/TBH100LB4 | 30000 | 11651 |
| 26.2 | 986 | 3.2 | 54.30 | B123 | TBS100LB4 | 30000 | 11672 |
| 25.9 | 1004 | 1.8 | 35.87 | B103 | TBS112MB6 | 22000 | 8339 |
| 25.9 | 960 | 3.9 | 111.94 | B143 | TH/TBH100L2 | 39586 | 39586 |
| 25.9 | 960 | 3.9 | 111.94 | B143 | TP/TBP100L2 | 39586 | 39586 |
| 25.6 | 970 | 3.9 | 111.94 | B143 | TBS100LA2 | 39701 | 39701 |
| 25.3 | 985 | 1.4 | 114.80 | B103 | TH/TBH100L2 | 22000 | 8433 |
| 25.3 | 985 | 1.4 | 114.80 | B103 | TP/TBP100L2 | 22000 | 8433 |
| 25.0 | 995 | 1.4 | 114.80 | B103 | TBS100LA2 | 22000 | 8457 |
| 24.8 | 1040 | 1.6 | 58.50 | B103 | TP/TBP112MS4 | 22000 | 8446 |
| 24.4 | 1055 | 1.6 | 58.50 | B103 | TH/TBH100LB4 | 22000 | 8477 |
| 24.4 | 1056 | 3.0 | 59.36 | B123 | TP/TBP112MS4 | 30000 | 11876 |
| 24.3 | 1062 | 1.6 | 58.50 | B103 | TBS100LB4 | 22000 | 8493 |
| 24.2 | 1026 | 2.6 | 119.60 | B123 | TH/TBH100L2 | 30000 | 11947 |
| 24.2 | 1026 | 2.6 | 119.60 | B123 | TP/TBP100L2 | 30000 | 11947 |
| 24.1 | 1033 | 1.3 | 120.42 | B103 | TH/TBH100L2 | 22000 | 8541 |
| 24.1 | 1033 | 1.3 | 120.42 | B103 | TP/TBP100L2 | 22000 | 8541 |
| 24.1 | 1070 | 3.0 | 59.36 | B123 | TH/TBH100LB4 | 30000 | 11917 |
| 24.0 | 1037 | 2.5 | 119.60 | B123 | TBS100LA2 | 30000 | 11978 |
| 23.9 | 1078 | 3.0 | 59.36 | B123 | TBS100LB4 | 30000 | 11938 |
| 23.9 | 1088 | 2.7 | 40.53 | B123 | TH/TBH132S6 | 30000 | 11923 |
| 23.9 | 1088 | 2.7 | 40.53 | B123 | TP/TBP132S6 | 30000 | 11923 |
| 23.8 | 1044 | 1.3 | 120.42 | B103 | TBS100LA2 | 22000 | 8564 |
| 23.7 | 1100 | 2.7 | 40.53 | B123 | TBS132SA6 | 30000 | 11954 |
| 23.6 | 1104 | 1.6 | 41.12 | B103 | TH/TBH132S6 | 22000 | 8547 |
| 23.6 | 1104 | 1.6 | 41.12 | B103 | TP/TBP132S6 | 22000 | 8547 |

# 5.1 B/BA MOTORIDUTTORE (50Hz)



## 3.00 kW

| n2 [rpm] | M2 [Nm] | fs | i | Riduttore | Motore | Fr2 D-S-P [N] | Fr2 C [N] |
|---|---|---|---|---|---|---|---|
| 23.3 | 1116 | 1.6 | 41.12 | B103 | TBS132SA6 | 22000 | 8570 |
| 23.3 | 1069 | 3.5 | 124.62 | B143 | TH/TBH100L2 | 40000 | 40000 |
| 23.3 | 1069 | 3.5 | 124.62 | B143 | TP/TBP100L2 | 40000 | 40000 |
| 23.2 | 1113 | 3.0 | 62.59 | B123 | TP/TBP112MS4 | 30000 | 12034 |
| 23.0 | 1080 | 3.5 | 124.62 | B143 | TBS100LA2 | 40000 | 40000 |
| 22.9 | 1135 | 2.6 | 40.53 | B123 | TBS112MB6 | 30000 | 12048 |
| 22.8 | 1129 | 2.9 | 62.59 | B123 | TH/TBH100LB4 | 30000 | 12076 |
| 22.7 | 1136 | 2.9 | 62.59 | B123 | TBS100LB4 | 30000 | 12097 |
| 22.6 | 1152 | 1.6 | 41.12 | B103 | TBS112MB6 | 22000 | 8640 |
| 22.3 | 1154 | 1.5 | 64.89 | B103 | TP/TBP112MS4 | 22000 | 8676 |
| 22.3 | 1115 | 2.4 | 129.96 | B123 | TH/TBH100L2 | 30000 | 12200 |
| 22.3 | 1115 | 2.4 | 129.96 | B123 | TP/TBP100L2 | 30000 | 12200 |
| 22.1 | 1127 | 2.3 | 129.96 | B123 | TBS100LA2 | 30000 | 12231 |
| 22.0 | 1170 | 1.5 | 64.89 | B103 | TH/TBH100LB4 | 22000 | 8707 |
| 21.9 | 1178 | 1.4 | 64.89 | B103 | TBS100LB4 | 22000 | 8723 |
| 21.8 | 1140 | 1.2 | 132.87 | B103 | TH/TBH100L2 | 22000 | 8763 |
| 21.8 | 1140 | 1.2 | 132.87 | B103 | TP/TBP100L2 | 22000 | 8763 |
| 21.7 | 1198 | 1.5 | 44.61 | B103 | TH/TBH132S6 | 22000 | 8728 |
| 21.7 | 1198 | 1.5 | 44.61 | B103 | TP/TBP132S6 | 22000 | 8728 |
| 21.6 | 1152 | 1.2 | 132.87 | B103 | TBS100LA2 | 22000 | 8787 |
| 21.6 | 1205 | 2.6 | 44.89 | B123 | TH/TBH132S6 | 30000 | 12227 |
| 21.6 | 1205 | 2.6 | 44.89 | B123 | TP/TBP132S6 | 30000 | 12227 |
| 21.5 | 1210 | 1.5 | 44.61 | B103 | TBS132SA6 | 22000 | 8751 |
| 21.4 | 1218 | 2.6 | 44.89 | B123 | TBS132SA6 | 30000 | 12258 |
| 21.3 | 1171 | 3.2 | 136.44 | B143 | TH/TBH100L2 | 40000 | 40000 |
| 21.3 | 1171 | 3.2 | 136.44 | B143 | TP/TBP100L2 | 40000 | 40000 |
| 21.1 | 1219 | 1.4 | 68.58 | B103 | TP/TBP112MS4 | 22000 | 8800 |
| 21.0 | 1183 | 3.2 | 136.44 | B143 | TBS100LA2 | 40000 | 40000 |
| 20.9 | 1237 | 1.4 | 68.58 | B103 | TH/TBH100LB4 | 22000 | 8831 |
| 20.9 | 1235 | 2.7 | 69.43 | B123 | TP/TBP112MS4 | 30000 | 12345 |
| 20.8 | 1249 | 1.4 | 44.61 | B103 | TBS112MB6 | 22000 | 8821 |
| 20.7 | 1245 | 1.4 | 68.58 | B103 | TBS100LB4 | 22000 | 8846 |
| 20.7 | 1257 | 2.5 | 44.89 | B123 | TBS112MB6 | 30000 | 12352 |
| 20.6 | 1252 | 2.6 | 69.43 | B123 | TH/TBH100LB4 | 30000 | 12386 |
| 20.6 | 1253 | 4.0 | 70.43 | B143 | TP/TBP112MS4 | 40000 | 40000 |
| 20.5 | 1270 | 1.4 | 47.28 | B103 | TH/TBH132S6 | 22000 | 8857 |
| 20.5 | 1270 | 1.4 | 47.28 | B103 | TP/TBP132S6 | 22000 | 8857 |
| 20.5 | 1261 | 2.6 | 69.43 | B123 | TBS100LB4 | 30000 | 12407 |
| 20.3 | 1283 | 1.4 | 47.28 | B103 | TBS132SA6 | 22000 | 8880 |
| 20.3 | 1270 | 3.9 | 70.43 | B143 | TH/TBH100LB4 | 40000 | 40000 |
| 20.2 | 1279 | 3.9 | 70.43 | B143 | TBS100LB4 | 40000 | 40000 |

# 5.1 B/BA MOTORIDUTTORE (50Hz)



## 3.00 kW

| n2 [rpm] | M2 [Nm] | fs | i | Riduttore | Motore | Fr2 D-S-P [N] | Fr2 C [N] |
|---|---|---|---|---|---|---|---|
| 20.1 | 1239 | 2.1 | 144.43 | B123 | TH/TBH100L2 | 30000 | 12521 |
| 20.1 | 1239 | 2.1 | 144.43 | B123 | TP/TBP100L2 | 30000 | 12521 |
| 20.0 | 1241 | 1.1 | 144.69 | B103 | TH/TBH100L2 | 22000 | 8956 |
| 20.0 | 1241 | 1.1 | 144.69 | B103 | TP/TBP100L2 | 22000 | 8956 |
| 19.9 | 1294 | 1.3 | 72.76 | B103 | TP/TBP112MS4 | 22000 | 8932 |
| 19.9 | 1252 | 2.1 | 144.43 | B123 | TBS100LA2 | 30000 | 12553 |
| 19.8 | 1254 | 1.1 | 144.69 | B103 | TBS100LA2 | 22000 | 8980 |
| 19.7 | 1324 | 1.3 | 47.28 | B103 | TBS112MB6 | 22000 | 8951 |
| 19.7 | 1312 | 1.3 | 72.76 | B103 | TH/TBH100LB4 | 22000 | 8963 |
| 19.5 | 1321 | 1.3 | 72.76 | B103 | TBS100LB4 | 22000 | 8979 |
| 19.5 | 1337 | 2.5 | 49.80 | B123 | TH/TBH132S6 | 30000 | 12535 |
| 19.5 | 1337 | 2.5 | 49.80 | B123 | TP/TBP132S6 | 30000 | 12535 |
| 19.5 | 1323 | 2.6 | 74.42 | B123 | TP/TBP112MS4 | 30000 | 12551 |
| 19.4 | 1284 | 2.9 | 149.59 | B143 | TH/TBH100L2 | 40000 | 40000 |
| 19.4 | 1284 | 2.9 | 149.59 | B143 | TP/TBP100L2 | 40000 | 40000 |
| 19.3 | 1349 | 1.3 | 50.24 | B103 | TH/TBH132S6 | 22000 | 8992 |
| 19.3 | 1349 | 1.3 | 50.24 | B103 | TP/TBP132S6 | 22000 | 8992 |
| 19.3 | 1351 | 2.5 | 49.80 | B123 | TBS132SA6 | 30000 | 12566 |
| 19.2 | 1342 | 2.6 | 74.42 | B123 | TH/TBH100LB4 | 30000 | 12593 |
| 19.2 | 1354 | 3.9 | 48.35 | B143 | TBS112MB6 | 40000 | 40000 |
| 19.2 | 1297 | 2.9 | 149.59 | B143 | TBS100LA2 | 40000 | 40000 |
| 19.1 | 1363 | 1.3 | 50.24 | B103 | TBS132SA6 | 22000 | 9015 |
| 19.1 | 1351 | 2.6 | 74.42 | B123 | TBS100LB4 | 30000 | 12614 |
| 18.8 | 1371 | 3.6 | 77.12 | B143 | TP/TBP112MS4 | 40000 | 40000 |
| 18.7 | 1395 | 2.4 | 49.80 | B123 | TBS112MB6 | 30000 | 12660 |
| 18.5 | 1407 | 1.3 | 50.24 | B103 | TBS112MB6 | 22000 | 9086 |
| 18.5 | 1391 | 3.6 | 77.12 | B143 | TH/TBH100LB4 | 40000 | 40000 |
| 18.4 | 1403 | 1.2 | 78.92 | B103 | TP/TBP112MS4 | 22000 | 9114 |
| 18.4 | 1400 | 3.6 | 77.12 | B143 | TBS100LB4 | 40000 | 40000 |
| 18.3 | 1424 | 1.3 | 53.02 | B103 | TH/TBH132S6 | 22000 | 9112 |
| 18.3 | 1424 | 1.3 | 53.02 | B103 | TP/TBP132S6 | 22000 | 9112 |
| 18.2 | 1427 | 3.7 | 53.16 | B143 | TH/TBH132S6 | 40000 | 40000 |
| 18.2 | 1427 | 3.7 | 53.16 | B143 | TP/TBP132S6 | 40000 | 40000 |
| 18.1 | 1423 | 1.2 | 78.92 | B103 | TH/TBH100LB4 | 22000 | 9145 |
| 18.1 | 1438 | 1.2 | 53.02 | B103 | TBS132SA6 | 22000 | 9135 |
| 18.1 | 1423 | 2.5 | 80.04 | B123 | TP/TBP112MS4 | 30000 | 12768 |
| 18.1 | 1375 | 1.9 | 160.23 | B123 | TH/TBH100L2 | 30000 | 12836 |
| 18.1 | 1375 | 1.9 | 160.23 | B123 | TP/TBP100L2 | 30000 | 12836 |
| 18.1 | 1442 | 3.6 | 53.16 | B143 | TBS132SA6 | 40000 | 40000 |
| 18.0 | 1433 | 1.2 | 78.92 | B103 | TBS100LB4 | 22000 | 9161 |
| 17.9 | 1458 | 2.3 | 54.30 | B123 | TH/TBH132S6 | 30000 | 12790 |

# 5.1 B/BA MOTORIDUTTORE (50Hz)



## 3.00 kW

| n2 [rpm] | M2 [Nm] | fs | i | Riduttore | Motore | Fr2 D-S-P [N] | Fr2 C [N] |
|---|---|---|---|---|---|---|---|
| 17.9 | 1458 | 2.3 | 54.30 | B123 | TP/TBP132S6 | 30000 | 12790 |
| 17.9 | 1443 | 2.4 | 80.04 | B123 | TH/TBH100LB4 | 30000 | 12809 |
| 17.9 | 1389 | 1.9 | 160.23 | B123 | TBS100LA2 | 30000 | 12867 |
| 17.8 | 1467 | 3.6 | 54.63 | B143 | TH/TBH132S6 | 40000 | 40000 |
| 17.8 | 1467 | 3.6 | 54.63 | B143 | TP/TBP132S6 | 40000 | 40000 |
| 17.7 | 1473 | 2.3 | 54.30 | B123 | TBS132SA6 | 30000 | 12821 |
| 17.7 | 1453 | 2.4 | 80.04 | B123 | TBS100LB4 | 30000 | 12830 |
| 17.6 | 1482 | 3.5 | 54.63 | B143 | TBS132SA6 | 40000 | 40000 |
| 17.5 | 1485 | 1.2 | 53.02 | B103 | TBS112MB6 | 22000 | 9205 |
| 17.5 | 1489 | 3.5 | 53.16 | B143 | TBS112MB6 | 40000 | 40000 |
| 17.4 | 1429 | 2.6 | 166.53 | B143 | TH/TBH100L2 | 40000 | 40000 |
| 17.4 | 1429 | 2.6 | 166.53 | B143 | TP/TBP100L2 | 40000 | 40000 |
| 17.3 | 1488 | 1.2 | 83.66 | B103 | TP/TBP112MS4 | 22000 | 9244 |
| 17.2 | 1444 | 2.6 | 166.53 | B143 | TBS100LA2 | 40000 | 40000 |
| 17.1 | 1508 | 1.2 | 83.66 | B103 | TH/TBH100LB4 | 22000 | 9275 |
| 17.1 | 1521 | 2.2 | 54.30 | B123 | TBS112MB6 | 30000 | 12914 |
| 17.0 | 1519 | 1.2 | 83.66 | B103 | TBS100LB4 | 22000 | 9291 |
| 17.0 | 1521 | 3.3 | 85.54 | B143 | TP/TBP112MS4 | 40000 | 40000 |
| 17.0 | 1530 | 3.4 | 54.63 | B143 | TBS112MB6 | 40000 | 40000 |
| 16.7 | 1542 | 3.2 | 85.54 | B143 | TH/TBH100LB4 | 40000 | 40000 |
| 16.6 | 1571 | 1.1 | 58.50 | B103 | TH/TBH132S6 | 22000 | 9330 |
| 16.6 | 1571 | 1.1 | 58.50 | B103 | TP/TBP132S6 | 22000 | 9330 |
| 16.6 | 1553 | 3.2 | 85.54 | B143 | TBS100LB4 | 40000 | 40000 |
| 16.4 | 1587 | 1.1 | 58.50 | B103 | TBS132SA6 | 22000 | 9353 |
| 16.4 | 1584 | 3.3 | 59.02 | B143 | TH/TBH132S6 | 40000 | 40000 |
| 16.4 | 1584 | 3.3 | 59.02 | B143 | TP/TBP132S6 | 40000 | 40000 |
| 16.3 | 1594 | 2.1 | 59.36 | B123 | TH/TBH132S6 | 30000 | 13051 |
| 16.3 | 1594 | 2.1 | 59.36 | B123 | TP/TBP132S6 | 30000 | 13051 |
| 16.3 | 1601 | 3.3 | 59.02 | B143 | TBS132SA6 | 40000 | 40000 |
| 16.2 | 1610 | 2.1 | 59.36 | B123 | TBS132SA6 | 30000 | 13081 |
| 16.1 | 1598 | 2.2 | 89.87 | B123 | TP/TBP112MS4 | 30000 | 13108 |
| 16.1 | 1548 | 1.7 | 180.40 | B123 | TH/TBH100L2 | 30000 | 13193 |
| 16.1 | 1548 | 1.7 | 180.40 | B123 | TP/TBP100L2 | 30000 | 13193 |
| 15.9 | 1638 | 1.1 | 58.50 | B103 | TBS112MB6 | 22000 | 9423 |
| 15.9 | 1564 | 1.7 | 180.40 | B123 | TBS100LA2 | 30000 | 13224 |
| 15.9 | 1620 | 2.2 | 89.87 | B123 | TH/TBH100LB4 | 30000 | 13149 |
| 15.8 | 1632 | 2.1 | 89.87 | B123 | TBS100LB4 | 30000 | 13169 |
| 15.8 | 1653 | 3.2 | 59.02 | B143 | TBS112MB6 | 40000 | 40000 |
| 15.7 | 1641 | 1.1 | 92.31 | B103 | TP/TBP112MS4 | 22000 | 9463 |
| 15.7 | 1662 | 2.0 | 59.36 | B123 | TBS112MB6 | 30000 | 13172 |
| 15.5 | 1664 | 1.1 | 92.31 | B103 | TH/TBH100LB4 | 22000 | 9494 |

# 5.1 B/BA MOTORIDUTTORE (50Hz)



## 3.00 kW

| n2 [rpm] | M2 [Nm] | fs | i | Riduttore | Motore | Fr2 D-S-P [N] | Fr2 C [N] |
|---|---|---|---|---|---|---|---|
| 15.5 | 1680 | 2.1 | 62.59 | B123 | TH/TBH132S6 | 30000 | 13204 |
| 15.5 | 1680 | 2.1 | 62.59 | B123 | TP/TBP132S6 | 30000 | 13204 |
| 15.5 | 1607 | 2.3 | 187.24 | B143 | TH/TBH100L2 | 40000 | 40000 |
| 15.5 | 1607 | 2.3 | 187.24 | B143 | TP/TBP100L2 | 40000 | 40000 |
| 15.4 | 1676 | 1.1 | 92.31 | B103 | TBS100LB4 | 22000 | 9509 |
| 15.4 | 1674 | 3.0 | 94.13 | B143 | TP/TBP112MS4 | 40000 | 40000 |
| 15.3 | 1698 | 2.0 | 62.59 | B123 | TBS132SA6 | 30000 | 13234 |
| 15.3 | 1623 | 2.3 | 187.24 | B143 | TBS100LA2 | 40000 | 40000 |
| 15.2 | 1697 | 2.9 | 94.13 | B143 | TH/TBH100LB4 | 40000 | 40000 |
| 15.1 | 1709 | 2.9 | 94.13 | B143 | TBS100LB4 | 40000 | 40000 |
| 15.0 | 1742 | 3.0 | 64.88 | B143 | TH/TBH132S6 | 40000 | 40000 |
| 15.0 | 1742 | 3.0 | 64.88 | B143 | TP/TBP132S6 | 40000 | 40000 |
| 14.9 | 1742 | 1.0 | 64.89 | B103 | TH/TBH132S6 | 22000 | 9559 |
| 14.9 | 1742 | 1.0 | 64.89 | B103 | TP/TBP132S6 | 22000 | 9559 |
| 14.9 | 1753 | 2.0 | 62.59 | B123 | TBS112MB6 | 30000 | 13324 |
| 14.8 | 1760 | 1.0 | 64.89 | B103 | TBS132SA6 | 22000 | 9581 |
| 14.8 | 1760 | 3.0 | 64.88 | B143 | TBS132SA6 | 40000 | 40000 |
| 14.5 | 1773 | 2.0 | 99.70 | B123 | TP/TBP112MS4 | 30000 | 13409 |
| 14.3 | 1817 | 1.0 | 64.89 | B103 | TBS112MB6 | 22000 | 9651 |
| 14.3 | 1798 | 1.9 | 99.70 | B123 | TH/TBH100LB4 | 30000 | 13449 |
| 14.3 | 1817 | 2.9 | 64.88 | B143 | TBS112MB6 | 40000 | 40000 |
| 14.2 | 1810 | 1.9 | 99.70 | B123 | TBS100LB4 | 30000 | 13469 |
| 14.1 | 1841 | 1.0 | 68.58 | B103 | TH/TBH132S6 | 22000 | 9680 |
| 14.1 | 1841 | 1.0 | 68.58 | B103 | TP/TBP132S6 | 22000 | 9680 |
| 14.0 | 1860 | 1.0 | 68.58 | B103 | TBS132SA6 | 22000 | 9702 |
| 14.0 | 1864 | 1.9 | 69.43 | B123 | TH/TBH132S6 | 30000 | 13499 |
| 14.0 | 1864 | 1.9 | 69.43 | B123 | TP/TBP132S6 | 30000 | 13499 |
| 13.8 | 1875 | 1.0 | 105.44 | B103 | TP/TBP112MS4 | 22000 | 9756 |
| 13.8 | 1884 | 1.8 | 69.43 | B123 | TBS132SA6 | 30000 | 13529 |
| 13.8 | 1891 | 2.8 | 70.43 | B143 | TH/TBH132S6 | 40000 | 40000 |
| 13.8 | 1891 | 2.8 | 70.43 | B143 | TP/TBP132S6 | 40000 | 40000 |
| 13.7 | 1882 | 2.7 | 105.83 | B143 | TP/TBP112MS4 | 40000 | 40000 |
| 13.6 | 1901 | 0.9 | 105.44 | B103 | TH/TBH100LB4 | 22000 | 9787 |
| 13.6 | 1920 | 0.9 | 68.58 | B103 | TBS112MB6 | 22000 | 9771 |
| 13.6 | 1897 | 1.8 | 106.65 | B123 | TP/TBP112MS4 | 30000 | 13601 |
| 13.6 | 1911 | 2.7 | 70.43 | B143 | TBS132SA6 | 40000 | 40000 |
| 13.5 | 1915 | 0.9 | 105.44 | B103 | TBS100LB4 | 22000 | 9802 |
| 13.5 | 1908 | 2.6 | 105.83 | B143 | TH/TBH100LB4 | 40000 | 40000 |
| 13.4 | 1923 | 1.8 | 106.65 | B123 | TH/TBH100LB4 | 30000 | 13640 |
| 13.4 | 1944 | 1.8 | 69.43 | B123 | TBS112MB6 | 30000 | 13617 |
| 13.4 | 1922 | 2.6 | 105.83 | B143 | TBS100LB4 | 40000 | 40000 |

# 5.1 B/BA MOTORIDUTTORE (50Hz)



## 3.00 kW

| n2 [rpm] | M2 [Nm] | fs | i | Riduttore | Motore | Fr2 D-S-P [N] | Fr2 C [N] |
|---|---|---|---|---|---|---|---|
| 13.3 | 1953 | 0.9 | 72.76 | B103 | TH/TBH132S6 | 22000 | 9808 |
| 13.3 | 1953 | 0.9 | 72.76 | B103 | TP/TBP132S6 | 22000 | 9808 |
| 13.3 | 1937 | 1.8 | 106.65 | B123 | TBS100LB4 | 30000 | 13659 |
| 13.2 | 1974 | 0.9 | 72.76 | B103 | TBS132SA6 | 22000 | 9830 |
| 13.2 | 1972 | 2.7 | 70.43 | B143 | TBS112MB6 | 40000 | 40000 |
| 13.0 | 1998 | 1.8 | 74.42 | B123 | TH/TBH132S6 | 30000 | 13693 |
| 13.0 | 1998 | 1.8 | 74.42 | B123 | TP/TBP132S6 | 30000 | 13693 |
| 13.0 | 1991 | 2.5 | 111.94 | B143 | TP/TBP112MS4 | 40000 | 40000 |
| 12.9 | 2019 | 1.8 | 74.42 | B123 | TBS132SA6 | 30000 | 13721 |
| 12.8 | 2018 | 2.5 | 111.94 | B143 | TH/TBH100LB4 | 40000 | 40000 |
| 12.7 | 2033 | 2.5 | 111.94 | B143 | TBS100LB4 | 40000 | 40000 |
| 12.6 | 2070 | 2.5 | 77.12 | B143 | TH/TBH132S6 | 40000 | 40000 |
| 12.6 | 2070 | 2.5 | 77.12 | B143 | TP/TBP132S6 | 40000 | 40000 |
| 12.5 | 2084 | 1.8 | 74.42 | B123 | TBS112MB6 | 30000 | 13808 |
| 12.4 | 2092 | 2.5 | 77.12 | B143 | TBS132SA6 | 40000 | 40000 |
| 12.1 | 2127 | 1.6 | 119.60 | B123 | TP/TBP112MS4 | 30000 | 13918 |
| 12.1 | 2149 | 1.7 | 80.04 | B123 | TH/TBH132S6 | 30000 | 13891 |
| 12.1 | 2149 | 1.7 | 80.04 | B123 | TP/TBP132S6 | 30000 | 13891 |
| 12.1 | 2160 | 2.4 | 77.12 | B143 | TBS112MB6 | 40000 | 40000 |
| 12.0 | 2171 | 1.7 | 80.04 | B123 | TBS132SA6 | 30000 | 13919 |
| 12.0 | 2157 | 1.6 | 119.60 | B123 | TH/TBH100LB4 | 30000 | 13956 |
| 11.9 | 2172 | 1.6 | 119.60 | B123 | TBS100LB4 | 30000 | 13975 |
| 11.6 | 2241 | 1.6 | 80.04 | B123 | TBS112MB6 | 30000 | 14004 |
| 11.6 | 2216 | 2.3 | 124.62 | B143 | TP/TBP112MS4 | 40000 | 40000 |
| 11.6 | 2252 | 3.7 | 83.89 | B153 | TH/TBH132S6 | 65000 | 65000 |
| 11.6 | 2252 | 3.7 | 83.89 | B153 | TP/TBP132S6 | 65000 | 65000 |
| 11.5 | 2247 | 2.2 | 124.62 | B143 | TH/TBH100LB4 | 40000 | 40000 |
| 11.4 | 2263 | 2.2 | 124.62 | B143 | TBS100LB4 | 40000 | 40000 |
| 11.4 | 2276 | 3.7 | 83.89 | B153 | TBS132SA6 | 65000 | 65000 |
| 11.3 | 2297 | 2.3 | 85.54 | B143 | TH/TBH132S6 | 40000 | 40000 |
| 11.3 | 2297 | 2.3 | 85.54 | B143 | TP/TBP132S6 | 40000 | 40000 |
| 11.2 | 2311 | 1.5 | 129.96 | B123 | TP/TBP112MS4 | 30000 | 14141 |
| 11.2 | 2321 | 2.3 | 85.54 | B143 | TBS132SA6 | 40000 | 40000 |
| 11.1 | 2353 | 3.6 | 87.65 | B153 | TH/TBH132S6 | 65000 | 65000 |
| 11.1 | 2353 | 3.6 | 87.65 | B153 | TP/TBP132S6 | 65000 | 65000 |
| 11.0 | 2343 | 1.5 | 129.96 | B123 | TH/TBH100LB4 | 30000 | 14177 |
| 11.0 | 2378 | 3.5 | 87.65 | B153 | TBS132SA6 | 65000 | 65000 |
| 10.9 | 2360 | 1.5 | 129.96 | B123 | TBS100LB4 | 30000 | 14196 |
| 10.9 | 2396 | 2.2 | 85.54 | B143 | TBS112MB6 | 40000 | 40000 |
| 10.8 | 2413 | 1.5 | 89.87 | B123 | TH/TBH132S6 | 30000 | 14196 |
| 10.8 | 2413 | 1.5 | 89.87 | B123 | TP/TBP132S6 | 30000 | 14196 |

# 5.1 B/BA MOTORIDUTTORE (50Hz)



## 3.00 kW

| n2 [rpm] | M2 [Nm] | fs | i | Riduttore | Motore | Fr2 D-S-P [N] | Fr2 C [N] |
|---|---|---|---|---|---|---|---|
| 10.7 | 2438 | 1.5 | 89.87 | B123 | TBS132SA6 | 30000 | 14222 |
| 10.6 | 2426 | 2.1 | 136.44 | B143 | TP/TBP112MS4 | 40000 | 40000 |
| 10.5 | 2460 | 2.0 | 136.44 | B143 | TH/TBH100LB4 | 40000 | 40000 |
| 10.4 | 2478 | 2.0 | 136.44 | B143 | TBS100LB4 | 40000 | 40000 |
| 10.4 | 2498 | 3.4 | 93.05 | B153 | TH/TBH132S6 | 65000 | 65000 |
| 10.4 | 2498 | 3.4 | 93.05 | B153 | TP/TBP132S6 | 65000 | 65000 |
| 10.3 | 2517 | 1.5 | 89.87 | B123 | TBS112MB6 | 30000 | 14303 |
| 10.3 | 2527 | 2.1 | 94.13 | B143 | TH/TBH132S6 | 40000 | 40000 |
| 10.3 | 2527 | 2.1 | 94.13 | B143 | TP/TBP132S6 | 40000 | 40000 |
| 10.3 | 2524 | 3.3 | 93.05 | B153 | TBS132SA6 | 65000 | 65000 |
| 10.2 | 2553 | 2.1 | 94.13 | B143 | TBS132SA6 | 40000 | 40000 |
| 10.0 | 2568 | 1.4 | 144.43 | B123 | TP/TBP112MS4 | 30000 | 14412 |
| 9.9 | 2604 | 1.3 | 144.43 | B123 | TH/TBH100LB4 | 30000 | 14446 |
| 9.9 | 2636 | 2.0 | 94.13 | B143 | TBS112MB6 | 40000 | 40000 |
| 9.8 | 2623 | 1.3 | 144.43 | B123 | TBS100LB4 | 30000 | 14464 |
| 9.7 | 2677 | 1.4 | 99.70 | B123 | TH/TBH132S6 | 30000 | 14455 |
| 9.7 | 2677 | 1.4 | 99.70 | B123 | TP/TBP132S6 | 30000 | 14455 |
| 9.7 | 2660 | 1.9 | 149.59 | B143 | TP/TBP112MS4 | 40000 | 40000 |
| 9.6 | 2705 | 1.4 | 99.70 | B123 | TBS132SA6 | 30000 | 14480 |
| 9.6 | 2697 | 1.9 | 149.59 | B143 | TH/TBH100LB4 | 40000 | 40000 |
| 9.5 | 2716 | 1.8 | 149.59 | B143 | TBS100LB4 | 40000 | 40000 |
| 9.4 | 2768 | 3.0 | 103.12 | B153 | TH/TBH132S6 | 65000 | 65000 |
| 9.4 | 2768 | 3.0 | 103.12 | B153 | TP/TBP132S6 | 65000 | 65000 |
| 9.3 | 2792 | 1.3 | 99.70 | B123 | TBS112MB6 | 30000 | 14555 |
| 9.3 | 2797 | 3.0 | 103.12 | B153 | TBS132SA6 | 65000 | 65000 |
| 9.2 | 2841 | 1.8 | 105.83 | B143 | TH/TBH132S6 | 40000 | 40000 |
| 9.2 | 2841 | 1.8 | 105.83 | B143 | TP/TBP132S6 | 40000 | 40000 |
| 9.1 | 2863 | 1.3 | 106.65 | B123 | TH/TBH132S6 | 30000 | 14614 |
| 9.1 | 2863 | 1.3 | 106.65 | B123 | TP/TBP132S6 | 30000 | 14614 |
| 9.1 | 2871 | 1.8 | 105.83 | B143 | TBS132SA6 | 40000 | 40000 |
| 9.0 | 2893 | 1.3 | 106.65 | B123 | TBS132SA6 | 30000 | 14638 |
| 9.0 | 2849 | 1.2 | 160.23 | B123 | TP/TBP112MS4 | 30000 | 14663 |
| 8.9 | 2889 | 1.2 | 160.23 | B123 | TH/TBH100LB4 | 30000 | 14695 |
| 8.9 | 2909 | 1.2 | 160.23 | B123 | TBS100LB4 | 30000 | 14711 |
| 8.8 | 2964 | 1.8 | 105.83 | B143 | TBS112MB6 | 40000 | 40000 |
| 8.7 | 2987 | 1.2 | 106.65 | B123 | TBS112MB6 | 30000 | 14709 |
| 8.7 | 3005 | 1.7 | 111.94 | B143 | TH/TBH132S6 | 40000 | 40000 |
| 8.7 | 3005 | 1.7 | 111.94 | B143 | TP/TBP132S6 | 40000 | 40000 |
| 8.7 | 2961 | 1.7 | 166.53 | B143 | TP/TBP112MS4 | 40000 | 40000 |
| 8.6 | 3037 | 1.7 | 111.94 | B143 | TBS132SA6 | 40000 | 40000 |
| 8.6 | 3003 | 1.7 | 166.53 | B143 | TH/TBH100LB4 | 40000 | 40000 |

# 5.1 B/BA MOTORIDUTTORE (50Hz)



## 3.00 kW

| n2 [rpm] | M2 [Nm] | fs | i | Riduttore | Motore | Fr2 D-S-P [N] | Fr2 C [N] |
|---|---|---|---|---|---|---|---|
| 8.5 | 3024 | 1.7 | 166.53 | B143 | TBS100LB4 | 40000 | 40000 |
| 8.3 | 3135 | 1.7 | 111.94 | B143 | TBS112MB6 | 40000 | 40000 |
| 8.1 | 3211 | 1.1 | 119.60 | B123 | TH/TBH132S6 | 30000 | 14865 |
| 8.1 | 3211 | 1.1 | 119.60 | B123 | TP/TBP132S6 | 30000 | 14865 |
| 8.0 | 3244 | 1.1 | 119.60 | B123 | TBS132SA6 | 30000 | 14887 |
| 8.0 | 3208 | 1.1 | 180.40 | B123 | TP/TBP112MS4 | 30000 | 14926 |
| 7.9 | 3253 | 1.1 | 180.40 | B123 | TH/TBH100LB4 | 30000 | 14955 |
| 7.9 | 3276 | 1.1 | 180.40 | B123 | TBS100LB4 | 30000 | 14970 |
| 7.8 | 3349 | 1.1 | 119.60 | B123 | TBS112MB6 | 30000 | 14951 |
| 7.8 | 3346 | 1.6 | 124.62 | B143 | TH/TBH132S6 | 40000 | 40000 |
| 7.8 | 3346 | 1.6 | 124.62 | B143 | TP/TBP132S6 | 40000 | 40000 |
| 7.8 | 3326 | 2.5 | 123.88 | B153 | TH/TBH132S6 | 65000 | 65000 |
| 7.8 | 3326 | 2.5 | 123.88 | B153 | TP/TBP132S6 | 65000 | 65000 |
| 7.7 | 3381 | 1.6 | 124.62 | B143 | TBS132SA6 | 40000 | 40000 |
| 7.7 | 3330 | 1.5 | 187.24 | B143 | TP/TBP112MS4 | 40000 | 40000 |
| 7.7 | 3361 | 2.5 | 123.88 | B153 | TBS132SA6 | 65000 | 65000 |
| 7.6 | 3376 | 1.5 | 187.24 | B143 | TH/TBH100LB4 | 40000 | 40000 |
| 7.6 | 3400 | 1.5 | 187.24 | B143 | TBS100LB4 | 40000 | 40000 |
| 7.5 | 3489 | 1.1 | 129.96 | B123 | TH/TBH132S6 | 30000 | 15030 |
| 7.5 | 3489 | 1.1 | 129.96 | B123 | TP/TBP132S6 | 30000 | 15030 |
| 7.5 | 3490 | 1.5 | 124.62 | B143 | TBS112MB6 | 40000 | 40000 |
| 7.4 | 3526 | 1.0 | 129.96 | B123 | TBS132SA6 | 30000 | 15050 |
| 7.2 | 3639 | 1.0 | 129.96 | B123 | TBS112MB6 | 30000 | 15108 |
| 7.2 | 3605 | 2.3 | 134.27 | B153 | TH/TBH132S6 | 65000 | 65000 |
| 7.2 | 3605 | 2.3 | 134.27 | B153 | TP/TBP132S6 | 65000 | 65000 |
| 7.2 | 3642 | 2.3 | 134.27 | B153 | TBS132SA6 | 65000 | 65000 |
| 7.1 | 3663 | 1.4 | 136.44 | B143 | TH/TBH132S6 | 40000 | 40000 |
| 7.1 | 3663 | 1.4 | 136.44 | B143 | TP/TBP132S6 | 40000 | 40000 |
| 7.0 | 3701 | 1.4 | 136.44 | B143 | TBS132SA6 | 40000 | 40000 |
| 6.8 | 3821 | 1.4 | 136.44 | B143 | TBS112MB6 | 40000 | 40000 |
| 6.7 | 3878 | 0.9 | 144.43 | B123 | TH/TBH132S6 | 30000 | 15215 |
| 6.7 | 3878 | 0.9 | 144.43 | B123 | TP/TBP132S6 | 30000 | 15215 |
| 6.6 | 3918 | 0.9 | 144.43 | B123 | TBS132SA6 | 30000 | 15232 |
| 6.5 | 4016 | 1.3 | 149.59 | B143 | TH/TBH132S6 | 40000 | 40000 |
| 6.5 | 4016 | 1.3 | 149.59 | B143 | TP/TBP132S6 | 40000 | 40000 |
| 6.5 | 4007 | 2.1 | 149.26 | B153 | TH/TBH132S6 | 65000 | 65000 |
| 6.5 | 4007 | 2.1 | 149.26 | B153 | TP/TBP132S6 | 65000 | 65000 |
| 6.4 | 4044 | 0.9 | 144.43 | B123 | TBS112MB6 | 30000 | 15281 |
| 6.4 | 4058 | 1.3 | 149.59 | B143 | TBS132SA6 | 40000 | 40000 |
| 6.4 | 4049 | 2.1 | 149.26 | B153 | TBS132SA6 | 65000 | 65000 |
| 6.2 | 4189 | 1.3 | 149.59 | B143 | TBS112MB6 | 40000 | 40000 |

# 5.1 B/BA MOTORIDUTTORE (50Hz)



## 3.00 kW

| n2 [rpm] | M2 [Nm] | fs | i | Riduttore | Motore | Fr2 D-S-P [N] | Fr2 C [N] |
|---|---|---|---|---|---|---|---|
| 5.9 | 4441 | 1.9 | 165.42 | B153 | TH/TBH132S6 | 65000 | 65000 |
| 5.9 | 4441 | 1.9 | 165.42 | B153 | TP/TBP132S6 | 65000 | 65000 |
| 5.8 | 4471 | 1.2 | 166.53 | B143 | TH/TBH132S6 | 40000 | 40000 |
| 5.8 | 4471 | 1.2 | 166.53 | B143 | TP/TBP132S6 | 40000 | 40000 |
| 5.8 | 4518 | 1.2 | 166.53 | B143 | TBS132SA6 | 40000 | 40000 |
| 5.8 | 4487 | 1.9 | 165.42 | B153 | TBS132SA6 | 65000 | 65000 |
| 5.6 | 4663 | 1.1 | 166.53 | B143 | TBS112MB6 | 40000 | 40000 |
| 5.2 | 5027 | 1.0 | 187.24 | B143 | TH/TBH132S6 | 40000 | 40000 |
| 5.2 | 5027 | 1.0 | 187.24 | B143 | TP/TBP132S6 | 40000 | 40000 |
| 5.1 | 5079 | 1.0 | 187.24 | B143 | TBS132SA6 | 40000 | 40000 |
| 5.0 | 5243 | 1.0 | 187.24 | B143 | TBS112MB6 | 40000 | 40000 |

## 4.00 kW

| n2 [rpm] | M2 [Nm] | fs | i | Riduttore | Motore | Fr2 D-S-P [N] | Fr2 C [N] |
|---|---|---|---|---|---|---|---|
| 512.7 | 65 | 3.4 | 5.71 | B063 | TH/TBH112M2 | 6246 | 1785 |
| 512.7 | 65 | 3.4 | 5.71 | B063 | TP/TBP112M2 | 6246 | 1785 |
| 507.5 | 65 | 3.3 | 5.71 | B063 | TBS112MA2 | 6266 | 1790 |
| 502.2 | 66 | 3.3 | 5.71 | B063 | TBS100LB2 | 6285 | 1796 |
| 425.9 | 78 | 3.3 | 6.88 | B063 | TH/TBH112M2 | 6600 | 1886 |
| 425.9 | 78 | 3.3 | 6.88 | B063 | TP/TBP112M2 | 6600 | 1886 |
| 421.6 | 79 | 3.2 | 6.88 | B063 | TBS112MA2 | 6620 | 1891 |
| 417.2 | 80 | 3.2 | 6.88 | B063 | TBS100LB2 | 6640 | 1897 |
| 400.1 | 83 | 3.2 | 7.32 | B063 | TH/TBH112M2 | 6722 | 1921 |
| 400.1 | 83 | 3.2 | 7.32 | B063 | TP/TBP112M2 | 6722 | 1921 |
| 396.0 | 84 | 3.1 | 7.32 | B063 | TBS112MA2 | 6742 | 1926 |
| 391.9 | 85 | 3.1 | 7.32 | B063 | TBS100LB2 | 6763 | 1932 |
| 350.6 | 100 | 2.6 | 8.36 | BA72 | TH/TBH112M2 | 3971 | 1985 |
| 350.6 | 100 | 2.6 | 8.36 | BA72 | TP/TBP112M2 | 3971 | 1985 |
| 347.0 | 101 | 2.6 | 8.36 | BA72 | TBS112MA2 | 3984 | 1992 |
| 343.4 | 102 | 2.6 | 8.36 | BA72 | TBS100LB2 | 3998 | 1999 |
| 319.8 | 104 | 3.3 | 9.16 | B063 | TH/TBH112M2 | 7172 | 2049 |
| 319.8 | 104 | 3.3 | 9.16 | B063 | TP/TBP112M2 | 7172 | 2049 |
| 316.6 | 105 | 3.3 | 9.16 | B063 | TBS112MA2 | 7193 | 2055 |
| 313.3 | 106 | 3.3 | 9.16 | B063 | TBS100LB2 | 7215 | 2061 |
| 291.3 | 120 | 2.2 | 10.06 | BA72 | TH/TBH112M2 | 4224 | 2112 |
| 291.3 | 120 | 2.2 | 10.06 | BA72 | TP/TBP112M2 | 4224 | 2112 |
| 288.3 | 121 | 2.2 | 10.06 | BA72 | TBS112MA2 | 4238 | 2119 |
| 285.5 | 116 | 3.4 | 10.26 | B063 | TH/TBH112M2 | 7408 | 2116 |
| 285.5 | 116 | 3.4 | 10.26 | B063 | TP/TBP112M2 | 7408 | 2116 |
| 285.3 | 123 | 2.1 | 10.06 | BA72 | TBS100LB2 | 4253 | 2127 |

# 5.1 B/BA MOTORIDUTTORE (50Hz)



## 4.00 kW

| n2 [rpm] | M2 [Nm] | fs | i | Riduttore | Motore | Fr2 D-S-P [N] | Fr2 C [N] |
|---|---|---|---|---|---|---|---|
| 282.6 | 117 | 3.3 | 10.26 | B063 | TBS112MA2 | 7429 | 2123 |
| 279.6 | 119 | 3.3 | 10.26 | B063 | TBS100LB2 | 7451 | 2129 |
| 265.7 | 125 | 3.2 | 11.03 | B063 | TH/TBH112M2 | 7559 | 2160 |
| 265.7 | 125 | 3.2 | 11.03 | B063 | TP/TBP112M2 | 7559 | 2160 |
| 263.0 | 126 | 3.2 | 11.03 | B063 | TBS112MA2 | 7581 | 2166 |
| 260.3 | 127 | 3.2 | 11.03 | B063 | TBS100LB2 | 7603 | 2172 |
| 253.7 | 136 | 2.1 | 5.71 | B063 | TH/TBH112M4 | 7635 | 2182 |
| 253.7 | 136 | 2.1 | 5.71 | B063 | TP/TBP112M4 | 7635 | 2182 |
| 252.0 | 136 | 2.1 | 5.71 | B063 | TBS112MA4 | 7650 | 2186 |
| 237.2 | 140 | 3.1 | 12.35 | B063 | TH/TBH112M2 | 7801 | 2229 |
| 237.2 | 140 | 3.1 | 12.35 | B063 | TP/TBP112M2 | 7801 | 2229 |
| 235.5 | 149 | 1.8 | 12.44 | BA72 | TH/TBH112M2 | 4534 | 2267 |
| 235.5 | 149 | 1.8 | 12.44 | BA72 | TP/TBP112M2 | 4534 | 2267 |
| 234.7 | 141 | 3.1 | 12.35 | B063 | TBS112MA2 | 7824 | 2235 |
| 233.1 | 150 | 1.7 | 12.44 | BA72 | TBS112MA2 | 4550 | 2275 |
| 232.3 | 143 | 3.0 | 12.35 | B063 | TBS100LB2 | 7846 | 2242 |
| 230.7 | 152 | 1.7 | 12.44 | BA72 | TBS100LB2 | 4565 | 2283 |
| 222.8 | 149 | 3.0 | 13.15 | B063 | TH/TBH112M2 | 7936 | 2268 |
| 222.8 | 149 | 3.0 | 13.15 | B063 | TP/TBP112M2 | 7936 | 2268 |
| 220.5 | 150 | 2.9 | 13.15 | B063 | TBS112MA2 | 7959 | 2274 |
| 218.2 | 152 | 2.9 | 13.15 | B063 | TBS100LB2 | 7981 | 2280 |
| 210.8 | 163 | 2.1 | 6.88 | B063 | TH/TBH112M4 | 8031 | 2295 |
| 210.8 | 163 | 2.1 | 6.88 | B063 | TP/TBP112M4 | 8031 | 2295 |
| 209.3 | 164 | 2.1 | 6.88 | B063 | TBS112MA4 | 8046 | 2299 |
| 203.1 | 163 | 3.7 | 14.43 | B083 | TH/TBH112M2 | 12777 | 3651 |
| 203.1 | 163 | 3.7 | 14.43 | B083 | TP/TBP112M2 | 12777 | 3651 |
| 201.0 | 165 | 3.7 | 14.43 | B083 | TBS112MA2 | 12816 | 3662 |
| 198.9 | 167 | 3.6 | 14.43 | B083 | TBS100LB2 | 12856 | 3673 |
| 198.0 | 174 | 2.0 | 7.32 | B063 | TH/TBH112M4 | 8167 | 2333 |
| 198.0 | 174 | 2.0 | 7.32 | B063 | TP/TBP112M4 | 8167 | 2333 |
| 196.6 | 175 | 2.0 | 7.32 | B063 | TBS112MA4 | 8182 | 2338 |
| 196.6 | 178 | 1.8 | 14.91 | BA72 | TH/TBH112M2 | 4815 | 2408 |
| 196.6 | 178 | 1.8 | 14.91 | BA72 | TP/TBP112M2 | 4815 | 2408 |
| 194.5 | 180 | 1.7 | 14.91 | BA72 | TBS112MA2 | 4832 | 2416 |
| 193.1 | 172 | 2.6 | 15.18 | B063 | TH/TBH112M2 | 8249 | 2357 |
| 193.1 | 172 | 2.6 | 15.18 | B063 | TP/TBP112M2 | 8249 | 2357 |
| 192.5 | 182 | 1.7 | 14.91 | BA72 | TBS100LB2 | 4849 | 2424 |
| 191.1 | 174 | 2.5 | 15.18 | B063 | TBS112MA2 | 8272 | 2363 |
| 189.1 | 175 | 2.5 | 15.18 | B063 | TBS100LB2 | 8295 | 2370 |
| 185.7 | 185 | 2.7 | 7.81 | B083 | TH/TBH112M4 | 13092 | 3741 |
| 185.7 | 185 | 2.7 | 7.81 | B083 | TP/TBP112M4 | 13092 | 3741 |

# 5.1 B/BA MOTORIDUTTORE (50Hz)



## 4.00 kW

| n2 [rpm] | M2 [Nm] | fs | i | Riduttore | Motore | Fr2 D-S-P [N] | Fr2 C [N] |
|---|---|---|---|---|---|---|---|
| 184.4 | 186 | 2.7 | 7.81 | B083 | TBS112MA4 | 13119 | 3748 |
| 176.6 | 188 | 3.4 | 16.60 | B083 | TH/TBH112M2 | 13313 | 3804 |
| 176.6 | 188 | 3.4 | 16.60 | B083 | TP/TBP112M2 | 13313 | 3804 |
| 174.7 | 190 | 3.4 | 16.60 | B083 | TBS112MA2 | 13353 | 3815 |
| 173.5 | 209 | 1.7 | 8.36 | BA72 | TH/TBH112M4 | 5020 | 2510 |
| 173.5 | 209 | 1.7 | 8.36 | BA72 | TP/TBP112M4 | 5020 | 2510 |
| 172.9 | 192 | 3.3 | 16.60 | B083 | TBS100LB2 | 13393 | 3827 |
| 172.3 | 193 | 2.3 | 17.00 | B063 | TH/TBH112M2 | 8501 | 2429 |
| 172.3 | 193 | 2.3 | 17.00 | B063 | TP/TBP112M2 | 8501 | 2429 |
| 172.3 | 211 | 1.7 | 8.36 | BA72 | TBS112MA4 | 5032 | 2516 |
| 170.6 | 195 | 2.3 | 17.00 | B063 | TBS112MA2 | 8524 | 2435 |
| 168.8 | 197 | 2.3 | 17.00 | B063 | TBS100LB2 | 8547 | 2442 |
| 168.2 | 204 | 2.9 | 8.62 | B083 | TH/TBH112M4 | 13474 | 3850 |
| 168.2 | 204 | 2.9 | 8.62 | B083 | TP/TBP112M4 | 13474 | 3850 |
| 167.0 | 206 | 2.9 | 8.62 | B083 | TBS112MA4 | 13501 | 3857 |
| 163.3 | 214 | 1.5 | 17.94 | BA72 | TH/TBH112M2 | 5122 | 2561 |
| 163.3 | 214 | 1.5 | 17.94 | BA72 | TP/TBP112M2 | 5122 | 2561 |
| 161.6 | 217 | 1.5 | 17.94 | BA72 | TBS112MA2 | 5140 | 2570 |
| 160.0 | 219 | 1.4 | 17.94 | BA72 | TBS100LB2 | 5158 | 2579 |
| 159.9 | 207 | 3.1 | 18.32 | B083 | TH/TBH112M2 | 13701 | 3915 |
| 159.9 | 207 | 3.1 | 18.32 | B083 | TP/TBP112M2 | 13701 | 3915 |
| 158.3 | 217 | 2.1 | 9.16 | B063 | TH/TBH112M4 | 8656 | 2473 |
| 158.3 | 217 | 2.1 | 9.16 | B063 | TP/TBP112M4 | 8656 | 2473 |
| 158.3 | 210 | 3.0 | 18.32 | B083 | TBS112MA2 | 13742 | 3926 |
| 157.2 | 219 | 2.1 | 9.16 | B063 | TBS112MA4 | 8671 | 2478 |
| 156.6 | 212 | 3.0 | 18.32 | B083 | TBS100LB2 | 13783 | 3938 |
| 144.1 | 252 | 1.4 | 10.06 | BA72 | TH/TBH112M4 | 5340 | 2670 |
| 144.1 | 252 | 1.4 | 10.06 | BA72 | TP/TBP112M4 | 5340 | 2670 |
| 143.1 | 254 | 1.4 | 10.06 | BA72 | TBS112MA4 | 5352 | 2676 |
| 141.3 | 243 | 2.1 | 10.26 | B063 | TH/TBH112M4 | 8907 | 2545 |
| 141.3 | 243 | 2.1 | 10.26 | B063 | TP/TBP112M4 | 8907 | 2545 |
| 140.3 | 245 | 2.1 | 10.26 | B063 | TBS112MA4 | 8922 | 2549 |
| 138.2 | 249 | 2.6 | 10.49 | B083 | TH/TBH112M4 | 14252 | 4072 |
| 138.2 | 249 | 2.6 | 10.49 | B083 | TP/TBP112M4 | 14252 | 4072 |
| 137.2 | 251 | 2.6 | 10.49 | B083 | TBS112MA4 | 14280 | 4080 |
| 132.8 | 259 | 3.9 | 10.92 | B103 | TH/TBH112M4 | 17964 | 5133 |
| 132.8 | 259 | 3.9 | 10.92 | B103 | TP/TBP112M4 | 17964 | 5133 |
| 132.0 | 265 | 1.2 | 22.19 | BA72 | TH/TBH112M2 | 5499 | 2749 |
| 132.0 | 265 | 1.2 | 22.19 | BA72 | TP/TBP112M2 | 5499 | 2749 |
| 131.9 | 261 | 3.8 | 10.92 | B103 | TBS112MA4 | 18002 | 5143 |
| 131.5 | 261 | 2.1 | 11.03 | B063 | TH/TBH112M4 | 9065 | 2590 |

# 5.1 B/BA MOTORIDUTTORE (50Hz)



## 4.00 kW

| n2 [rpm] | M2 [Nm] | fs | i | Riduttore | Motore | Fr2 D-S-P [N] | Fr2 C [N] |
|---|---|---|---|---|---|---|---|
| 131.5 | 261 | 2.1 | 11.03 | B063 | TP/TBP112M4 | 9065 | 2590 |
| 130.8 | 254 | 1.8 | 22.39 | B063 | TH/TBH112M2 | 9117 | 2605 |
| 130.8 | 254 | 1.8 | 22.39 | B063 | TP/TBP112M2 | 9117 | 2605 |
| 130.7 | 268 | 1.2 | 22.19 | BA72 | TBS112MA2 | 5518 | 2759 |
| 130.6 | 263 | 2.1 | 11.03 | B063 | TBS112MA4 | 9080 | 2594 |
| 129.5 | 256 | 1.8 | 22.39 | B063 | TBS112MA2 | 9140 | 2611 |
| 129.3 | 271 | 1.2 | 22.19 | BA72 | TBS100LB2 | 5537 | 2768 |
| 128.4 | 258 | 2.5 | 22.82 | B083 | TH/TBH112M2 | 14587 | 4168 |
| 128.4 | 258 | 2.5 | 22.82 | B083 | TP/TBP112M2 | 14587 | 4168 |
| 128.2 | 259 | 1.7 | 22.39 | B063 | TBS100LB2 | 9163 | 2618 |
| 127.1 | 261 | 2.4 | 22.82 | B083 | TBS112MA2 | 14630 | 4180 |
| 125.8 | 264 | 2.4 | 22.82 | B083 | TBS100LB2 | 14672 | 4192 |
| 125.1 | 275 | 2.7 | 11.59 | B083 | TH/TBH112M4 | 14654 | 4187 |
| 125.1 | 275 | 2.7 | 11.59 | B083 | TP/TBP112M4 | 14654 | 4187 |
| 124.3 | 277 | 2.7 | 11.59 | B083 | TBS112MA4 | 14683 | 4195 |
| 124.2 | 280 | 1.9 | 7.81 | B083 | TH/TBH132MA6 | 14674 | 4193 |
| 124.2 | 280 | 1.9 | 7.81 | B083 | TP/TBP132MA6 | 14674 | 4193 |
| 123.6 | 268 | 3.9 | 23.70 | B103 | TH/TBH112M2 | 18383 | 5252 |
| 123.6 | 268 | 3.9 | 23.70 | B103 | TP/TBP112M2 | 18383 | 5252 |
| 122.9 | 282 | 1.9 | 7.81 | B083 | TBS132MA6 | 14716 | 4205 |
| 122.4 | 271 | 3.9 | 23.70 | B103 | TBS112MA2 | 18440 | 5269 |
| 121.1 | 274 | 3.8 | 23.70 | B103 | TBS100LB2 | 18498 | 5285 |
| 120.3 | 286 | 3.5 | 12.05 | B103 | TH/TBH112M4 | 18505 | 5287 |
| 120.3 | 286 | 3.5 | 12.05 | B103 | TP/TBP112M4 | 18505 | 5287 |
| 119.5 | 288 | 3.5 | 12.05 | B103 | TBS112MA4 | 18543 | 5298 |
| 119.4 | 291 | 2.9 | 8.13 | B103 | TH/TBH132MA6 | 18542 | 5298 |
| 119.4 | 291 | 2.9 | 8.13 | B103 | TP/TBP132MA6 | 18542 | 5298 |
| 118.1 | 294 | 2.9 | 8.13 | B103 | TBS132MA6 | 18600 | 5314 |
| 117.4 | 293 | 2.0 | 12.35 | B063 | TH/TBH112M4 | 9314 | 2661 |
| 117.4 | 293 | 2.0 | 12.35 | B063 | TP/TBP112M4 | 9314 | 2661 |
| 116.6 | 295 | 2.0 | 12.35 | B063 | TBS112MA4 | 9329 | 2666 |
| 116.5 | 311 | 1.1 | 12.44 | BA72 | TH/TBH112M4 | 5732 | 2866 |
| 116.5 | 311 | 1.1 | 12.44 | BA72 | TP/TBP112M4 | 5732 | 2866 |
| 115.7 | 314 | 1.1 | 12.44 | BA72 | TBS112MA4 | 5745 | 2873 |
| 112.5 | 309 | 2.0 | 8.62 | B083 | TH/TBH132MA6 | 15081 | 4309 |
| 112.5 | 309 | 2.0 | 8.62 | B083 | TP/TBP132MA6 | 15081 | 4309 |
| 112.3 | 295 | 1.5 | 26.09 | B063 | TH/TBH112M2 | 9459 | 2703 |
| 112.3 | 295 | 1.5 | 26.09 | B063 | TP/TBP112M2 | 9459 | 2703 |
| 111.3 | 312 | 2.0 | 8.62 | B083 | TBS132MA6 | 15124 | 4321 |
| 111.2 | 298 | 1.5 | 26.09 | B063 | TBS112MA2 | 9482 | 2709 |
| 110.5 | 300 | 3.7 | 26.51 | B103 | TH/TBH112M2 | 19014 | 5433 |

# 5.1 B/BA MOTORIDUTTORE (50Hz)



## 4.00 kW

| n2 [rpm] | M2 [Nm] | fs | i | Riduttore | Motore | Fr2 D-S-P [N] | Fr2 C [N] |
|---|---|---|---|---|---|---|---|
| 110.5 | 300 | 3.7 | 26.51 | B103 | TP/TBP112M2 | 19014 | 5433 |
| 110.3 | 312 | 1.9 | 13.15 | B063 | TH/TBH112M4 | 9451 | 2700 |
| 110.3 | 312 | 1.9 | 13.15 | B063 | TP/TBP112M4 | 9451 | 2700 |
| 110.0 | 302 | 1.5 | 26.09 | B063 | TBS100LB2 | 9505 | 2716 |
| 109.7 | 302 | 2.1 | 26.71 | B083 | TH/TBH112M2 | 15243 | 4355 |
| 109.7 | 302 | 2.1 | 26.71 | B083 | TP/TBP112M2 | 15243 | 4355 |
| 109.5 | 314 | 1.9 | 13.15 | B063 | TBS112MA4 | 9466 | 2704 |
| 109.4 | 303 | 3.7 | 26.51 | B103 | TBS112MA2 | 19073 | 5449 |
| 108.6 | 306 | 2.1 | 26.71 | B083 | TBS112MA2 | 15287 | 4368 |
| 108.2 | 306 | 3.7 | 26.51 | B103 | TBS100LB2 | 19132 | 5466 |
| 108.2 | 321 | 2.9 | 8.97 | B103 | TH/TBH132MA6 | 19095 | 5456 |
| 108.2 | 321 | 2.9 | 8.97 | B103 | TP/TBP132MA6 | 19095 | 5456 |
| 107.4 | 309 | 2.1 | 26.71 | B083 | TBS100LB2 | 15331 | 4380 |
| 107.1 | 324 | 2.9 | 8.97 | B103 | TBS132MA6 | 19154 | 5473 |
| 104.5 | 317 | 1.4 | 28.03 | B063 | TH/TBH112M2 | 9618 | 2748 |
| 104.5 | 317 | 1.4 | 28.03 | B063 | TP/TBP112M2 | 9618 | 2748 |
| 103.5 | 321 | 1.4 | 28.03 | B063 | TBS112MA2 | 9641 | 2755 |
| 102.4 | 324 | 1.4 | 28.03 | B063 | TBS100LB2 | 9664 | 2761 |
| 100.5 | 342 | 2.4 | 14.43 | B083 | TH/TBH112M4 | 15565 | 4447 |
| 100.5 | 342 | 2.4 | 14.43 | B083 | TP/TBP112M4 | 15565 | 4447 |
| 99.8 | 344 | 2.4 | 14.43 | B083 | TBS112MA4 | 15595 | 4456 |
| 99.3 | 334 | 1.9 | 29.50 | B083 | TH/TBH112M2 | 15663 | 4475 |
| 99.3 | 334 | 1.9 | 29.50 | B083 | TP/TBP112M2 | 15663 | 4475 |
| 98.3 | 337 | 1.9 | 29.50 | B083 | TBS112MA2 | 15707 | 4488 |
| 97.3 | 341 | 1.9 | 29.50 | B083 | TBS100LB2 | 15752 | 4500 |
| 97.3 | 373 | 1.1 | 14.91 | BA72 | TH/TBH112M4 | 6088 | 3044 |
| 97.3 | 373 | 1.1 | 14.91 | BA72 | TP/TBP112M4 | 6088 | 3044 |
| 96.8 | 355 | 3.4 | 14.99 | B103 | TH/TBH112M4 | 19747 | 5642 |
| 96.8 | 355 | 3.4 | 14.99 | B103 | TP/TBP112M4 | 19747 | 5642 |
| 96.6 | 376 | 1.1 | 14.91 | BA72 | TBS112MA4 | 6102 | 3051 |
| 96.1 | 358 | 3.4 | 14.99 | B103 | TBS112MA4 | 19787 | 5653 |
| 95.9 | 346 | 3.5 | 30.55 | B103 | TH/TBH112M2 | 19835 | 5667 |
| 95.9 | 346 | 3.5 | 30.55 | B103 | TP/TBP112M2 | 19835 | 5667 |
| 95.5 | 360 | 1.6 | 15.18 | B063 | TH/TBH112M4 | 9759 | 2788 |
| 95.5 | 360 | 1.6 | 15.18 | B063 | TP/TBP112M4 | 9759 | 2788 |
| 94.9 | 362 | 1.6 | 15.18 | B063 | TBS112MA4 | 9774 | 2793 |
| 94.9 | 350 | 3.4 | 30.55 | B103 | TBS112MA2 | 19896 | 5684 |
| 93.9 | 353 | 3.4 | 30.55 | B103 | TBS100LB2 | 19957 | 5702 |
| 92.4 | 376 | 1.8 | 10.49 | B083 | TH/TBH132MA6 | 15904 | 4544 |
| 92.4 | 376 | 1.8 | 10.49 | B083 | TP/TBP132MA6 | 15904 | 4544 |
| 92.1 | 360 | 1.8 | 31.80 | B083 | TH/TBH112M2 | 15985 | 4567 |

# 5.1 B/BA MOTORIDUTTORE (50Hz)



## 4.00 kW

| n2 [rpm] | M2 [Nm] | fs | i | Riduttore | Motore | Fr2 D-S-P [N] | Fr2 C [N] |
|---|---|---|---|---|---|---|---|
| 92.1 | 360 | 1.8 | 31.80 | B083 | TP/TBP112M2 | 15985 | 4567 |
| 91.5 | 380 | 1.8 | 10.49 | B083 | TBS132MA6 | 15948 | 4556 |
| 91.2 | 364 | 1.8 | 31.80 | B083 | TBS112MA2 | 16029 | 4580 |
| 90.3 | 368 | 1.7 | 31.80 | B083 | TBS100LB2 | 16074 | 4593 |
| 88.8 | 391 | 2.7 | 10.92 | B103 | TH/TBH132MA6 | 20239 | 5783 |
| 88.8 | 391 | 2.7 | 10.92 | B103 | TP/TBP132MA6 | 20239 | 5783 |
| 88.6 | 374 | 3.4 | 33.07 | B103 | TH/TBH112M2 | 20304 | 5801 |
| 88.6 | 374 | 3.4 | 33.07 | B103 | TP/TBP112M2 | 20304 | 5801 |
| 87.9 | 395 | 2.7 | 10.92 | B103 | TBS132MA6 | 20301 | 5800 |
| 87.7 | 378 | 3.4 | 33.07 | B103 | TBS112MA2 | 20365 | 5819 |
| 87.6 | 379 | 1.2 | 33.43 | B063 | TH/TBH112M2 | 10004 | 2858 |
| 87.6 | 379 | 1.2 | 33.43 | B063 | TP/TBP112M2 | 10004 | 2858 |
| 87.4 | 393 | 2.2 | 16.60 | B083 | TH/TBH112M4 | 16158 | 4617 |
| 87.4 | 393 | 2.2 | 16.60 | B083 | TP/TBP112M4 | 16158 | 4617 |
| 86.8 | 396 | 2.1 | 16.60 | B083 | TBS112MA4 | 16188 | 4625 |
| 86.8 | 382 | 3.3 | 33.07 | B103 | TBS100LB2 | 20428 | 5836 |
| 86.7 | 382 | 1.2 | 33.43 | B063 | TBS112MA2 | 10026 | 2865 |
| 85.8 | 386 | 1.2 | 33.43 | B063 | TBS100LB2 | 10048 | 2871 |
| 85.3 | 403 | 1.5 | 17.00 | B063 | TH/TBH112M4 | 9999 | 2857 |
| 85.3 | 403 | 1.5 | 17.00 | B063 | TP/TBP112M4 | 9999 | 2857 |
| 84.9 | 391 | 1.6 | 34.49 | B083 | TH/TBH112M2 | 16336 | 4667 |
| 84.9 | 391 | 1.6 | 34.49 | B083 | TP/TBP112M2 | 16336 | 4667 |
| 84.7 | 406 | 1.5 | 17.00 | B063 | TBS112MA4 | 10013 | 2861 |
| 84.1 | 395 | 1.6 | 34.49 | B083 | TBS112MA2 | 16381 | 4680 |
| 84.0 | 409 | 3.4 | 17.27 | B103 | TH/TBH112M4 | 20586 | 5882 |
| 84.0 | 409 | 3.4 | 17.27 | B103 | TP/TBP112M4 | 20586 | 5882 |
| 83.7 | 415 | 1.9 | 11.59 | B083 | TH/TBH132MA6 | 16325 | 4664 |
| 83.7 | 415 | 1.9 | 11.59 | B083 | TP/TBP132MA6 | 16325 | 4664 |
| 83.4 | 412 | 3.4 | 17.27 | B103 | TBS112MA4 | 20628 | 5894 |
| 83.2 | 399 | 1.6 | 34.49 | B083 | TBS100LB2 | 16426 | 4693 |
| 82.9 | 419 | 1.9 | 11.59 | B083 | TBS132MA6 | 16369 | 4677 |
| 81.7 | 406 | 3.1 | 35.87 | B103 | TH/TBH112M2 | 20794 | 5941 |
| 81.7 | 406 | 3.1 | 35.87 | B103 | TP/TBP112M2 | 20794 | 5941 |
| 80.8 | 410 | 3.1 | 35.87 | B103 | TBS112MA2 | 20857 | 5959 |
| 80.8 | 449 | 0.9 | 17.94 | BA72 | TH/TBH112M4 | 6476 | 3238 |
| 80.8 | 449 | 0.9 | 17.94 | BA72 | TP/TBP112M4 | 6476 | 3238 |
| 80.5 | 431 | 2.4 | 12.05 | B103 | TH/TBH132MA6 | 20828 | 5951 |
| 80.5 | 431 | 2.4 | 12.05 | B103 | TP/TBP132MA6 | 20828 | 5951 |
| 80.3 | 452 | 0.9 | 17.94 | BA72 | TBS112MA4 | 6491 | 3246 |
| 80.0 | 415 | 3.1 | 35.87 | B103 | TBS100LB2 | 20920 | 5977 |
| 79.7 | 436 | 2.4 | 12.05 | B103 | TBS132MA6 | 20891 | 5969 |

# 5.1 B/BA MOTORIDUTTORE (50Hz)



## 4.00 kW

| n2 [rpm] | M2 [Nm] | fs | i | Riduttore | Motore | Fr2 D-S-P [N] | Fr2 C [N] |
|---|---|---|---|---|---|---|---|
| 79.1 | 434 | 2.0 | 18.32 | B083 | TH/TBH112M4 | 16582 | 4738 |
| 79.1 | 434 | 2.0 | 18.32 | B083 | TP/TBP112M4 | 16582 | 4738 |
| 78.6 | 437 | 1.9 | 18.32 | B083 | TBS112MA4 | 16612 | 4746 |
| 76.1 | 452 | 3.1 | 19.06 | B103 | TH/TBH112M4 | 21183 | 6052 |
| 76.1 | 452 | 3.1 | 19.06 | B103 | TP/TBP112M4 | 21183 | 6052 |
| 76.0 | 437 | 1.0 | 38.58 | B063 | TH/TBH112M2 | 10307 | 2945 |
| 76.0 | 437 | 1.0 | 38.58 | B063 | TP/TBP112M2 | 10307 | 2945 |
| 75.6 | 455 | 3.1 | 19.06 | B103 | TBS112MA4 | 21225 | 6064 |
| 75.2 | 441 | 1.0 | 38.58 | B063 | TBS112MA2 | 10329 | 2951 |
| 74.4 | 446 | 1.0 | 38.58 | B063 | TBS100LB2 | 10350 | 2957 |
| 74.0 | 448 | 1.4 | 39.60 | B083 | TH/TBH112M2 | 16937 | 4839 |
| 74.0 | 448 | 1.4 | 39.60 | B083 | TP/TBP112M2 | 16937 | 4839 |
| 73.2 | 453 | 1.4 | 39.60 | B083 | TBS112MA2 | 16982 | 4852 |
| 72.5 | 458 | 1.4 | 39.60 | B083 | TBS100LB2 | 17027 | 4865 |
| 71.2 | 466 | 2.7 | 41.12 | B103 | TH/TBH112M2 | 21636 | 6182 |
| 71.2 | 466 | 2.7 | 41.12 | B103 | TP/TBP112M2 | 21636 | 6182 |
| 70.5 | 470 | 2.7 | 41.12 | B103 | TBS112MA2 | 21701 | 6200 |
| 69.8 | 475 | 2.7 | 41.12 | B103 | TBS100LB2 | 21766 | 6219 |
| 68.2 | 486 | 1.3 | 42.95 | B083 | TH/TBH112M2 | 17293 | 4941 |
| 68.2 | 486 | 1.3 | 42.95 | B083 | TP/TBP112M2 | 17293 | 4941 |
| 67.5 | 491 | 1.3 | 42.95 | B083 | TBS112MA2 | 17339 | 4954 |
| 67.2 | 517 | 1.6 | 14.43 | B083 | TH/TBH132MA6 | 17264 | 4933 |
| 67.2 | 517 | 1.6 | 14.43 | B083 | TP/TBP132MA6 | 17264 | 4933 |
| 66.8 | 497 | 1.3 | 42.95 | B083 | TBS100LB2 | 17384 | 4967 |
| 66.5 | 522 | 1.6 | 14.43 | B083 | TBS132MA6 | 17309 | 4945 |
| 65.7 | 505 | 2.5 | 44.61 | B103 | TH/TBH112M2 | 22000 | 6328 |
| 65.7 | 505 | 2.5 | 44.61 | B103 | TP/TBP112M2 | 22000 | 6328 |
| 65.0 | 510 | 2.5 | 44.61 | B103 | TBS112MA2 | 22000 | 6347 |
| 64.8 | 531 | 1.1 | 22.39 | B063 | TH/TBH112M4 | 10546 | 3013 |
| 64.8 | 531 | 1.1 | 22.39 | B063 | TP/TBP112M4 | 10546 | 3013 |
| 64.7 | 536 | 2.3 | 14.99 | B103 | TH/TBH132MA6 | 22000 | 6335 |
| 64.7 | 536 | 2.3 | 14.99 | B103 | TP/TBP132MA6 | 22000 | 6335 |
| 64.5 | 514 | 1.2 | 45.44 | B083 | TH/TBH112M2 | 17540 | 5012 |
| 64.5 | 514 | 1.2 | 45.44 | B083 | TP/TBP112M2 | 17540 | 5012 |
| 64.3 | 535 | 1.1 | 22.39 | B063 | TBS112MA4 | 10559 | 3017 |
| 64.3 | 516 | 2.5 | 44.61 | B103 | TBS100LB2 | 22000 | 6366 |
| 64.1 | 542 | 2.3 | 14.99 | B103 | TBS132MA6 | 22000 | 6354 |
| 63.8 | 520 | 1.2 | 45.44 | B083 | TBS112MA2 | 17586 | 5024 |
| 63.5 | 541 | 1.6 | 22.82 | B083 | TH/TBH112M4 | 17528 | 5008 |
| 63.5 | 541 | 1.6 | 22.82 | B083 | TP/TBP112M4 | 17528 | 5008 |
| 63.2 | 525 | 1.2 | 45.44 | B083 | TBS100LB2 | 17631 | 5038 |

# 5.1 B/BA MOTORIDUTTORE (50Hz)



## 4.00 kW

| n2 [rpm] | M2 [Nm] | fs | i | Riduttore | Motore | Fr2 D-S-P [N] | Fr2 C [N] |
|---|---|---|---|---|---|---|---|
| 63.1 | 545 | 1.6 | 22.82 | B083 | TBS112MA4 | 17558 | 5017 |
| 62.4 | 556 | 4.0 | 15.38 | B123 | TBS132MA6 | 30000 | 9001 |
| 62.0 | 535 | 2.4 | 47.28 | B103 | TH/TBH112M2 | 22000 | 6434 |
| 62.0 | 535 | 2.4 | 47.28 | B103 | TP/TBP112M2 | 22000 | 6434 |
| 61.3 | 541 | 2.4 | 47.28 | B103 | TBS112MA2 | 22000 | 6453 |
| 61.2 | 562 | 2.5 | 23.70 | B103 | TH/TBH112M4 | 22000 | 6441 |
| 61.2 | 562 | 2.5 | 23.70 | B103 | TP/TBP112M4 | 22000 | 6441 |
| 60.8 | 566 | 2.5 | 23.70 | B103 | TBS112MA4 | 22000 | 6454 |
| 60.7 | 547 | 2.3 | 47.28 | B103 | TBS100LB2 | 22000 | 6472 |
| 58.5 | 594 | 1.5 | 16.60 | B083 | TH/TBH132MA6 | 17865 | 5104 |
| 58.5 | 594 | 1.5 | 16.60 | B083 | TP/TBP132MA6 | 17865 | 5104 |
| 58.3 | 569 | 2.2 | 50.24 | B103 | TH/TBH112M2 | 22000 | 6545 |
| 58.3 | 569 | 2.2 | 50.24 | B103 | TP/TBP112M2 | 22000 | 6545 |
| 57.8 | 600 | 1.5 | 16.60 | B083 | TBS132MA6 | 17909 | 5117 |
| 57.7 | 575 | 2.2 | 50.24 | B103 | TBS112MA2 | 22000 | 6564 |
| 57.2 | 580 | 1.1 | 51.19 | B083 | TH/TBH112M2 | 18000 | 5161 |
| 57.2 | 580 | 1.1 | 51.19 | B083 | TP/TBP112M2 | 18000 | 5161 |
| 57.1 | 581 | 2.2 | 50.24 | B103 | TBS100LB2 | 22000 | 6584 |
| 56.7 | 586 | 1.1 | 51.19 | B083 | TBS112MA2 | 18000 | 5174 |
| 56.2 | 618 | 2.4 | 17.27 | B103 | TH/TBH132MA6 | 22000 | 6593 |
| 56.2 | 618 | 2.4 | 17.27 | B103 | TP/TBP132MA6 | 22000 | 6593 |
| 56.1 | 592 | 1.1 | 51.19 | B083 | TBS100LB2 | 18000 | 5187 |
| 55.6 | 619 | 1.0 | 26.09 | B063 | TH/TBH112M4 | 10820 | 3091 |
| 55.6 | 619 | 1.0 | 26.09 | B063 | TP/TBP112M4 | 10820 | 3091 |
| 55.6 | 625 | 2.4 | 17.27 | B103 | TBS132MA6 | 22000 | 6612 |
| 55.3 | 600 | 2.1 | 53.02 | B103 | TH/TBH112M2 | 22000 | 6645 |
| 55.3 | 600 | 2.1 | 53.02 | B103 | TP/TBP112M2 | 22000 | 6645 |
| 55.2 | 623 | 1.0 | 26.09 | B063 | TBS112MA4 | 10832 | 3095 |
| 54.7 | 629 | 2.4 | 26.51 | B103 | TH/TBH112M4 | 22000 | 6647 |
| 54.7 | 629 | 2.4 | 26.51 | B103 | TP/TBP112M4 | 22000 | 6647 |
| 54.7 | 607 | 2.1 | 53.02 | B103 | TBS112MA2 | 22000 | 6665 |
| 54.3 | 633 | 1.3 | 26.71 | B083 | TH/TBH112M4 | 18000 | 5202 |
| 54.3 | 633 | 1.3 | 26.71 | B083 | TP/TBP112M4 | 18000 | 5202 |
| 54.3 | 633 | 2.4 | 26.51 | B103 | TBS112MA4 | 22000 | 6659 |
| 54.1 | 613 | 2.1 | 53.02 | B103 | TBS100LB2 | 22000 | 6684 |
| 54.0 | 615 | 3.9 | 54.30 | B123 | TH/TBH112M2 | 30000 | 9403 |
| 54.0 | 615 | 3.9 | 54.30 | B123 | TP/TBP112M2 | 30000 | 9403 |
| 53.9 | 638 | 1.3 | 26.71 | B083 | TBS112MA4 | 18000 | 5211 |
| 53.4 | 621 | 3.9 | 54.30 | B123 | TBS112MA2 | 30000 | 9429 |
| 52.9 | 656 | 1.4 | 18.32 | B083 | TH/TBH132MA6 | 18000 | 5225 |
| 52.9 | 656 | 1.4 | 18.32 | B083 | TP/TBP132MA6 | 18000 | 5225 |

# 5.1 B/BA MOTORIDUTTORE (50Hz)



## 4.00 kW

| n2 [rpm] | M2 [Nm] | fs | i | Riduttore | Motore | Fr2 D-S-P [N] | Fr2 C [N] |
|---|---|---|---|---|---|---|---|
| 52.9 | 628 | 3.8 | 54.30 | B123 | TBS100LB2 | 30000 | 9456 |
| 52.8 | 629 | 1.0 | 55.52 | B083 | TH/TBH112M2 | 18000 | 5263 |
| 52.8 | 629 | 1.0 | 55.52 | B083 | TP/TBP112M2 | 18000 | 5263 |
| 52.4 | 663 | 1.3 | 18.32 | B083 | TBS132MA6 | 18000 | 5238 |
| 52.2 | 635 | 1.0 | 55.52 | B083 | TBS112MA2 | 18000 | 5276 |
| 52.2 | 665 | 3.5 | 18.58 | B123 | TH/TBH132MA6 | 30000 | 9448 |
| 52.2 | 665 | 3.5 | 18.58 | B123 | TP/TBP132MA6 | 30000 | 9448 |
| 51.7 | 665 | 0.9 | 28.03 | B063 | TH/TBH112M4 | 10939 | 3125 |
| 51.7 | 665 | 0.9 | 28.03 | B063 | TP/TBP112M4 | 10939 | 3125 |
| 51.7 | 672 | 3.4 | 18.58 | B123 | TBS132MA6 | 30000 | 9474 |
| 50.9 | 682 | 2.2 | 19.06 | B103 | TH/TBH132MA6 | 22000 | 6774 |
| 50.9 | 682 | 2.2 | 19.06 | B103 | TP/TBP132MA6 | 22000 | 6774 |
| 50.4 | 689 | 2.1 | 19.06 | B103 | TBS132MA6 | 22000 | 6794 |
| 50.1 | 662 | 1.9 | 58.50 | B103 | TH/TBH112M2 | 22000 | 6830 |
| 50.1 | 662 | 1.9 | 58.50 | B103 | TP/TBP112M2 | 22000 | 6830 |
| 49.6 | 669 | 1.9 | 58.50 | B103 | TBS112MA2 | 22000 | 6849 |
| 49.4 | 672 | 3.6 | 59.36 | B123 | TH/TBH112M2 | 30000 | 9632 |
| 49.4 | 672 | 3.6 | 59.36 | B123 | TP/TBP112M2 | 30000 | 9632 |
| 49.2 | 699 | 1.2 | 29.50 | B083 | TH/TBH112M4 | 18000 | 5323 |
| 49.2 | 699 | 1.2 | 29.50 | B083 | TP/TBP112M4 | 18000 | 5323 |
| 49.1 | 676 | 1.9 | 58.50 | B103 | TBS100LB2 | 22000 | 6869 |
| 48.9 | 679 | 3.5 | 59.36 | B123 | TBS112MA2 | 30000 | 9659 |
| 48.8 | 704 | 1.2 | 29.50 | B083 | TBS112MA4 | 18000 | 5331 |
| 48.4 | 686 | 3.5 | 59.36 | B123 | TBS100LB2 | 30000 | 9685 |
| 47.5 | 724 | 2.2 | 30.55 | B103 | TH/TBH112M4 | 22000 | 6911 |
| 47.5 | 724 | 2.2 | 30.55 | B103 | TP/TBP112M4 | 22000 | 6911 |
| 47.1 | 729 | 2.2 | 30.55 | B103 | TBS112MA4 | 22000 | 6924 |
| 47.1 | 738 | 3.6 | 20.61 | B123 | TH/TBH132MA6 | 30000 | 9712 |
| 47.1 | 738 | 3.6 | 20.61 | B123 | TP/TBP132MA6 | 30000 | 9712 |
| 46.8 | 709 | 3.5 | 62.59 | B123 | TH/TBH112M2 | 30000 | 9769 |
| 46.8 | 709 | 3.5 | 62.59 | B123 | TP/TBP112M2 | 30000 | 9769 |
| 46.6 | 745 | 3.5 | 20.61 | B123 | TBS132MA6 | 30000 | 9739 |
| 46.4 | 741 | 3.8 | 31.26 | B123 | TH/TBH112M4 | 30000 | 9760 |
| 46.4 | 741 | 3.8 | 31.26 | B123 | TP/TBP112M4 | 30000 | 9760 |
| 46.3 | 716 | 3.5 | 62.59 | B123 | TBS112MA2 | 30000 | 9796 |
| 46.1 | 746 | 3.8 | 31.26 | B123 | TBS112MA4 | 30000 | 9777 |
| 45.9 | 723 | 3.4 | 62.59 | B123 | TBS100LB2 | 30000 | 9823 |
| 45.6 | 754 | 1.1 | 31.80 | B083 | TH/TBH112M4 | 18000 | 5414 |
| 45.6 | 754 | 1.1 | 31.80 | B083 | TP/TBP112M4 | 18000 | 5414 |
| 45.3 | 759 | 1.1 | 31.80 | B083 | TBS112MA4 | 18000 | 5422 |
| 45.2 | 735 | 1.7 | 64.89 | B103 | TH/TBH112M2 | 22000 | 7027 |

# 5.1 B/BA MOTORIDUTTORE (50Hz)



## 4.00 kW

| n2 [rpm] | M2 [Nm] | fs | i | Riduttore | Motore | Fr2 D-S-P [N] | Fr2 C [N] |
|---|---|---|---|---|---|---|---|
| 45.2 | 735 | 1.7 | 64.89 | B103 | TP/TBP112M2 | 22000 | 7027 |
| 44.7 | 742 | 1.7 | 64.89 | B103 | TBS112MA2 | 22000 | 7047 |
| 44.2 | 750 | 1.7 | 64.89 | B103 | TBS100LB2 | 22000 | 7067 |
| 43.9 | 784 | 2.2 | 33.07 | B103 | TH/TBH112M4 | 22000 | 7061 |
| 43.9 | 784 | 2.2 | 33.07 | B103 | TP/TBP112M4 | 22000 | 7061 |
| 43.5 | 789 | 2.2 | 33.07 | B103 | TBS112MA4 | 22000 | 7074 |
| 42.7 | 776 | 1.6 | 68.58 | B103 | TH/TBH112M2 | 22000 | 7133 |
| 42.7 | 776 | 1.6 | 68.58 | B103 | TP/TBP112M2 | 22000 | 7133 |
| 42.6 | 815 | 3.6 | 22.78 | B123 | TH/TBH132MA6 | 30000 | 9969 |
| 42.6 | 815 | 3.6 | 22.78 | B123 | TP/TBP132MA6 | 30000 | 9969 |
| 42.5 | 817 | 1.1 | 22.82 | B083 | TH/TBH132MA6 | 18000 | 5488 |
| 42.5 | 817 | 1.1 | 22.82 | B083 | TP/TBP132MA6 | 18000 | 5488 |
| 42.3 | 785 | 1.6 | 68.58 | B103 | TBS112MA2 | 22000 | 7153 |
| 42.2 | 786 | 3.1 | 69.43 | B123 | TH/TBH112M2 | 30000 | 10040 |
| 42.2 | 786 | 3.1 | 69.43 | B123 | TP/TBP112M2 | 30000 | 10040 |
| 42.1 | 825 | 1.1 | 22.82 | B083 | TBS132MA6 | 18000 | 5501 |
| 42.1 | 824 | 3.6 | 22.78 | B123 | TBS132MA6 | 30000 | 9996 |
| 42.0 | 818 | 1.0 | 34.49 | B083 | TH/TBH112M4 | 18000 | 5511 |
| 42.0 | 818 | 1.0 | 34.49 | B083 | TP/TBP112M4 | 18000 | 5511 |
| 41.9 | 793 | 1.6 | 68.58 | B103 | TBS100LB2 | 22000 | 7173 |
| 41.8 | 822 | 3.4 | 34.68 | B123 | TH/TBH112M4 | 30000 | 10027 |
| 41.8 | 822 | 3.4 | 34.68 | B123 | TP/TBP112M4 | 30000 | 10027 |
| 41.8 | 794 | 3.1 | 69.43 | B123 | TBS112MA2 | 30000 | 10067 |
| 41.7 | 823 | 1.0 | 34.49 | B083 | TBS112MA4 | 18000 | 5519 |
| 41.5 | 828 | 3.4 | 34.68 | B123 | TBS112MA4 | 30000 | 10045 |
| 41.3 | 803 | 3.1 | 69.43 | B123 | TBS100LB2 | 30000 | 10095 |
| 40.9 | 848 | 1.7 | 23.70 | B103 | TH/TBH132MA6 | 22000 | 7185 |
| 40.9 | 848 | 1.7 | 23.70 | B103 | TP/TBP132MA6 | 22000 | 7185 |
| 40.5 | 857 | 1.7 | 23.70 | B103 | TBS132MA6 | 22000 | 7205 |
| 40.4 | 850 | 2.0 | 35.87 | B103 | TH/TBH112M4 | 22000 | 7216 |
| 40.4 | 850 | 2.0 | 35.87 | B103 | TP/TBP112M4 | 22000 | 7216 |
| 40.3 | 824 | 1.5 | 72.76 | B103 | TH/TBH112M2 | 22000 | 7248 |
| 40.3 | 824 | 1.5 | 72.76 | B103 | TP/TBP112M2 | 22000 | 7248 |
| 40.1 | 856 | 2.0 | 35.87 | B103 | TBS112MA4 | 22000 | 7229 |
| 39.9 | 832 | 1.5 | 72.76 | B103 | TBS112MA2 | 22000 | 7267 |
| 39.4 | 841 | 1.5 | 72.76 | B103 | TBS100LB2 | 22000 | 7288 |
| 39.4 | 843 | 3.1 | 74.42 | B123 | TH/TBH112M2 | 30000 | 10223 |
| 39.4 | 843 | 3.1 | 74.42 | B123 | TP/TBP112M2 | 30000 | 10223 |
| 39.0 | 851 | 3.1 | 74.42 | B123 | TBS112MA2 | 30000 | 10250 |
| 38.6 | 860 | 3.1 | 74.42 | B123 | TBS100LB2 | 30000 | 10277 |
| 37.5 | 927 | 3.2 | 25.89 | B123 | TH/TBH132MA6 | 30000 | 10299 |

# 5.1 B/BA MOTORIDUTTORE (50Hz)



## 4.00 kW

| n2 [rpm] | M2 [Nm] | fs | i | Riduttore | Motore | Fr2 D-S-P [N] | Fr2 C [N] |
|---|---|---|---|---|---|---|---|
| 37.5 | 927 | 3.2 | 25.89 | B123 | TP/TBP132MA6 | 30000 | 10299 |
| 37.1 | 894 | 1.4 | 78.92 | B103 | TH/TBH112M2 | 22000 | 7406 |
| 37.1 | 894 | 1.4 | 78.92 | B103 | TP/TBP112M2 | 22000 | 7406 |
| 37.1 | 936 | 3.1 | 25.89 | B123 | TBS132MA6 | 30000 | 10326 |
| 36.7 | 903 | 1.4 | 78.92 | B103 | TBS112MA2 | 22000 | 7426 |
| 36.6 | 939 | 0.9 | 39.60 | B083 | TH/TBH112M4 | 18000 | 5672 |
| 36.6 | 939 | 0.9 | 39.60 | B083 | TP/TBP112M4 | 18000 | 5672 |
| 36.6 | 949 | 1.7 | 26.51 | B103 | TH/TBH132MA6 | 22000 | 7400 |
| 36.6 | 949 | 1.7 | 26.51 | B103 | TP/TBP132MA6 | 22000 | 7400 |
| 36.6 | 906 | 2.9 | 80.04 | B123 | TH/TBH112M2 | 30000 | 10415 |
| 36.6 | 906 | 2.9 | 80.04 | B123 | TP/TBP112M2 | 30000 | 10415 |
| 36.4 | 912 | 1.4 | 78.92 | B103 | TBS100LB2 | 22000 | 7446 |
| 36.3 | 956 | 0.9 | 26.71 | B083 | TH/TBH132MA6 | 18000 | 5671 |
| 36.3 | 956 | 0.9 | 26.71 | B083 | TP/TBP132MA6 | 18000 | 5671 |
| 36.2 | 959 | 1.6 | 26.51 | B103 | TBS132MA6 | 22000 | 7420 |
| 36.2 | 916 | 2.9 | 80.04 | B123 | TBS112MA2 | 30000 | 10442 |
| 35.9 | 966 | 0.9 | 26.71 | B083 | TBS132MA6 | 18000 | 5682 |
| 35.9 | 925 | 2.8 | 80.04 | B123 | TBS100LB2 | 30000 | 10469 |
| 35.8 | 961 | 2.9 | 40.53 | B123 | TH/TBH112M4 | 30000 | 10431 |
| 35.8 | 961 | 2.9 | 40.53 | B123 | TP/TBP112M4 | 30000 | 10431 |
| 35.5 | 968 | 2.9 | 40.53 | B123 | TBS112MA4 | 30000 | 10449 |
| 35.3 | 975 | 1.7 | 41.12 | B103 | TH/TBH112M4 | 22000 | 7479 |
| 35.3 | 975 | 1.7 | 41.12 | B103 | TP/TBP112M4 | 22000 | 7479 |
| 35.3 | 985 | 3.0 | 27.51 | B123 | TH/TBH132MA6 | 30000 | 10456 |
| 35.3 | 985 | 3.0 | 27.51 | B123 | TP/TBP132MA6 | 30000 | 10456 |
| 35.0 | 947 | 1.4 | 83.66 | B103 | TH/TBH112M2 | 22000 | 7520 |
| 35.0 | 947 | 1.4 | 83.66 | B103 | TP/TBP112M2 | 22000 | 7520 |
| 35.0 | 982 | 1.7 | 41.12 | B103 | TBS112MA4 | 22000 | 7492 |
| 34.9 | 995 | 3.0 | 27.51 | B123 | TBS132MA6 | 30000 | 10483 |
| 34.7 | 957 | 1.4 | 83.66 | B103 | TBS112MA2 | 22000 | 7540 |
| 34.3 | 967 | 1.4 | 83.66 | B103 | TBS100LB2 | 22000 | 7560 |
| 34.3 | 969 | 3.9 | 85.54 | B143 | TH/TBH112M2 | 35806 | 35806 |
| 34.3 | 969 | 3.9 | 85.54 | B143 | TP/TBP112M2 | 35806 | 35806 |
| 33.9 | 979 | 3.8 | 85.54 | B143 | TBS112MA2 | 35906 | 35906 |
| 33.5 | 989 | 3.8 | 85.54 | B143 | TBS100LB2 | 36008 | 36008 |
| 32.6 | 1018 | 2.6 | 89.87 | B123 | TH/TBH112M2 | 30000 | 10720 |
| 32.6 | 1018 | 2.6 | 89.87 | B123 | TP/TBP112M2 | 30000 | 10720 |
| 32.5 | 1058 | 1.6 | 44.61 | B103 | TH/TBH112M4 | 22000 | 7636 |
| 32.5 | 1058 | 1.6 | 44.61 | B103 | TP/TBP112M4 | 22000 | 7636 |
| 32.3 | 1065 | 1.6 | 44.61 | B103 | TBS112MA4 | 22000 | 7649 |
| 32.3 | 1064 | 2.8 | 44.89 | B123 | TH/TBH112M4 | 30000 | 10696 |

# 5.1 B/BA MOTORIDUTTORE (50Hz)



## 4.00 kW

| n2 [rpm] | M2 [Nm] | fs | i | Riduttore | Motore | Fr2 D-S-P [N] | Fr2 C [N] |
|---|---|---|---|---|---|---|---|
| 32.3 | 1064 | 2.8 | 44.89 | B123 | TP/TBP112M4 | 30000 | 10696 |
| 32.3 | 1028 | 2.6 | 89.87 | B123 | TBS112MA2 | 30000 | 10748 |
| 32.1 | 1072 | 2.8 | 44.89 | B123 | TBS112MA4 | 30000 | 10714 |
| 31.9 | 1039 | 2.5 | 89.87 | B123 | TBS100LB2 | 30000 | 10775 |
| 31.7 | 1045 | 1.3 | 92.31 | B103 | TH/TBH112M2 | 22000 | 7713 |
| 31.7 | 1045 | 1.3 | 92.31 | B103 | TP/TBP112M2 | 22000 | 7713 |
| 31.7 | 1094 | 1.5 | 30.55 | B103 | TH/TBH132MA6 | 22000 | 7673 |
| 31.7 | 1094 | 1.5 | 30.55 | B103 | TP/TBP132MA6 | 22000 | 7673 |
| 31.5 | 1102 | 2.7 | 30.79 | B123 | TH/TBH132MA6 | 30000 | 10747 |
| 31.5 | 1102 | 2.7 | 30.79 | B123 | TP/TBP132MA6 | 30000 | 10747 |
| 31.4 | 1056 | 1.3 | 92.31 | B103 | TBS112MA2 | 22000 | 7733 |
| 31.4 | 1105 | 1.5 | 30.55 | B103 | TBS132MA6 | 22000 | 7693 |
| 31.2 | 1114 | 2.6 | 30.79 | B123 | TBS132MA6 | 30000 | 10774 |
| 31.1 | 1067 | 1.3 | 92.31 | B103 | TBS100LB2 | 22000 | 7754 |
| 31.1 | 1066 | 3.5 | 94.13 | B143 | TH/TBH112M2 | 36743 | 36743 |
| 31.1 | 1066 | 3.5 | 94.13 | B143 | TP/TBP112M2 | 36743 | 36743 |
| 31.0 | 1119 | 2.6 | 31.26 | B123 | TH/TBH132MA6 | 30000 | 10786 |
| 31.0 | 1119 | 2.6 | 31.26 | B123 | TP/TBP132MA6 | 30000 | 10786 |
| 30.8 | 1077 | 3.5 | 94.13 | B143 | TBS112MA2 | 36844 | 36844 |
| 30.7 | 1121 | 1.5 | 47.28 | B103 | TH/TBH112M4 | 22000 | 7749 |
| 30.7 | 1121 | 1.5 | 47.28 | B103 | TP/TBP112M4 | 22000 | 7749 |
| 30.7 | 1131 | 2.6 | 31.26 | B123 | TBS132MA6 | 30000 | 10813 |
| 30.5 | 1129 | 1.5 | 47.28 | B103 | TBS112MA4 | 22000 | 7762 |
| 30.5 | 1088 | 3.4 | 94.13 | B143 | TBS100LB2 | 36947 | 36947 |
| 29.4 | 1129 | 2.3 | 99.70 | B123 | TH/TBH112M2 | 30000 | 10995 |
| 29.4 | 1129 | 2.3 | 99.70 | B123 | TP/TBP112M2 | 30000 | 10995 |
| 29.3 | 1184 | 1.5 | 33.07 | B103 | TH/TBH132MA6 | 22000 | 7825 |
| 29.3 | 1184 | 1.5 | 33.07 | B103 | TP/TBP132MA6 | 22000 | 7825 |
| 29.1 | 1141 | 2.3 | 99.70 | B123 | TBS112MA2 | 30000 | 11022 |
| 29.1 | 1181 | 2.7 | 49.80 | B123 | TH/TBH112M4 | 30000 | 10965 |
| 29.1 | 1181 | 2.7 | 49.80 | B123 | TP/TBP112M4 | 30000 | 10965 |
| 29.0 | 1196 | 1.5 | 33.07 | B103 | TBS132MA6 | 22000 | 7845 |
| 28.9 | 1191 | 1.4 | 50.24 | B103 | TH/TBH112M4 | 22000 | 7867 |
| 28.9 | 1191 | 1.4 | 50.24 | B103 | TP/TBP112M4 | 22000 | 7867 |
| 28.9 | 1189 | 2.7 | 49.80 | B123 | TBS112MA4 | 30000 | 10983 |
| 28.8 | 1152 | 2.3 | 99.70 | B123 | TBS100LB2 | 30000 | 11049 |
| 28.7 | 1199 | 1.4 | 50.24 | B103 | TBS112MA4 | 22000 | 7880 |
| 28.0 | 1242 | 2.4 | 34.68 | B123 | TH/TBH132MA6 | 30000 | 11052 |
| 28.0 | 1242 | 2.4 | 34.68 | B123 | TP/TBP132MA6 | 30000 | 11052 |
| 27.8 | 1194 | 1.1 | 105.44 | B103 | TH/TBH112M2 | 22000 | 7976 |
| 27.8 | 1194 | 1.1 | 105.44 | B103 | TP/TBP112M2 | 22000 | 7976 |

# 5.1 B/BA MOTORIDUTTORE (50Hz)



## 4.00 kW

| n2 [rpm] | M2 [Nm] | fs | i | Riduttore | Motore | Fr2 D-S-P [N] | Fr2 C [N] |
|---|---|---|---|---|---|---|---|
| 27.7 | 1255 | 2.3 | 34.68 | B123 | TBS132MA6 | 30000 | 11079 |
| 27.7 | 1198 | 3.1 | 105.83 | B143 | TH/TBH112M2 | 37903 | 37903 |
| 27.7 | 1198 | 3.1 | 105.83 | B143 | TP/TBP112M2 | 37903 | 37903 |
| 27.5 | 1206 | 1.1 | 105.44 | B103 | TBS112MA2 | 22000 | 7996 |
| 27.5 | 1208 | 2.2 | 106.65 | B123 | TH/TBH112M2 | 30000 | 11172 |
| 27.5 | 1208 | 2.2 | 106.65 | B123 | TP/TBP112M2 | 30000 | 11172 |
| 27.4 | 1211 | 3.1 | 105.83 | B143 | TBS112MA2 | 38005 | 38005 |
| 27.3 | 1257 | 1.4 | 53.02 | B103 | TH/TBH112M4 | 22000 | 7971 |
| 27.3 | 1257 | 1.4 | 53.02 | B103 | TP/TBP112M4 | 22000 | 7971 |
| 27.3 | 1260 | 4.0 | 53.16 | B143 | TH/TBH112M4 | 37910 | 37910 |
| 27.3 | 1260 | 4.0 | 53.16 | B143 | TP/TBP112M4 | 37910 | 37910 |
| 27.2 | 1219 | 1.1 | 105.44 | B103 | TBS100LB2 | 22000 | 8017 |
| 27.2 | 1266 | 1.3 | 53.02 | B103 | TBS112MA4 | 22000 | 7984 |
| 27.2 | 1220 | 2.2 | 106.65 | B123 | TBS112MA2 | 30000 | 11199 |
| 27.1 | 1269 | 3.9 | 53.16 | B143 | TBS112MA4 | 37978 | 37978 |
| 27.1 | 1223 | 3.1 | 105.83 | B143 | TBS100LB2 | 38109 | 38109 |
| 27.0 | 1284 | 1.4 | 35.87 | B103 | TH/TBH132MA6 | 22000 | 7982 |
| 27.0 | 1284 | 1.4 | 35.87 | B103 | TP/TBP132MA6 | 22000 | 7982 |
| 26.9 | 1233 | 2.1 | 106.65 | B123 | TBS100LB2 | 30000 | 11226 |
| 26.8 | 1297 | 1.4 | 35.87 | B103 | TBS132MA6 | 22000 | 8002 |
| 26.7 | 1287 | 2.5 | 54.30 | B123 | TH/TBH112M4 | 30000 | 11187 |
| 26.7 | 1287 | 2.5 | 54.30 | B123 | TP/TBP112M4 | 30000 | 11187 |
| 26.5 | 1296 | 2.5 | 54.30 | B123 | TBS112MA4 | 30000 | 11205 |
| 26.5 | 1313 | 3.8 | 36.67 | B143 | TH/TBH132MA6 | 38171 | 38171 |
| 26.5 | 1313 | 3.8 | 36.67 | B143 | TP/TBP132MA6 | 38171 | 38171 |
| 26.5 | 1295 | 3.9 | 54.63 | B143 | TH/TBH112M4 | 38178 | 38178 |
| 26.5 | 1295 | 3.9 | 54.63 | B143 | TP/TBP112M4 | 38178 | 38178 |
| 26.4 | 1304 | 3.8 | 54.63 | B143 | TBS112MA4 | 38246 | 38246 |
| 26.2 | 1326 | 3.8 | 36.67 | B143 | TBS132MA6 | 38273 | 38273 |
| 26.2 | 1267 | 3.0 | 111.94 | B143 | TH/TBH112M2 | 38462 | 38462 |
| 26.2 | 1267 | 3.0 | 111.94 | B143 | TP/TBP112M2 | 38462 | 38462 |
| 25.9 | 1281 | 2.9 | 111.94 | B143 | TBS112MA2 | 38565 | 38565 |
| 25.6 | 1294 | 2.9 | 111.94 | B143 | TBS100LB2 | 38669 | 38669 |
| 25.5 | 1300 | 1.0 | 114.80 | B103 | TH/TBH112M2 | 22000 | 8143 |
| 25.5 | 1300 | 1.0 | 114.80 | B103 | TP/TBP112M2 | 22000 | 8143 |
| 25.3 | 1313 | 1.0 | 114.80 | B103 | TBS112MA2 | 22000 | 8164 |
| 25.0 | 1327 | 1.0 | 114.80 | B103 | TBS100LB2 | 22000 | 8184 |
| 24.8 | 1387 | 1.2 | 58.50 | B103 | TH/TBH112M4 | 22000 | 8161 |
| 24.8 | 1387 | 1.2 | 58.50 | B103 | TP/TBP112M4 | 22000 | 8161 |
| 24.6 | 1397 | 1.2 | 58.50 | B103 | TBS112MA4 | 22000 | 8175 |
| 24.6 | 1399 | 3.6 | 59.02 | B143 | TH/TBH112M4 | 38939 | 38939 |

# 5.1 B/BA MOTORIDUTTORE (50Hz)



## 4.00 kW

| n2 [rpm] | M2 [Nm] | fs | i | Riduttore | Motore | Fr2 D-S-P [N] | Fr2 C [N] |
|---|---|---|---|---|---|---|---|
| 24.6 | 1399 | 3.6 | 59.02 | B143 | TP/TBP112M4 | 38939 | 38939 |
| 24.5 | 1354 | 1.9 | 119.60 | B123 | TH/TBH112M2 | 30000 | 11471 |
| 24.5 | 1354 | 1.9 | 119.60 | B123 | TP/TBP112M2 | 30000 | 11471 |
| 24.4 | 1407 | 2.3 | 59.36 | B123 | TH/TBH112M4 | 30000 | 11414 |
| 24.4 | 1407 | 2.3 | 59.36 | B123 | TP/TBP112M4 | 30000 | 11414 |
| 24.4 | 1409 | 3.5 | 59.02 | B143 | TBS112MA4 | 39007 | 39007 |
| 24.3 | 1417 | 2.3 | 59.36 | B123 | TBS112MA4 | 30000 | 11431 |
| 24.2 | 1368 | 1.9 | 119.60 | B123 | TBS112MA2 | 30000 | 11498 |
| 24.1 | 1442 | 3.5 | 40.29 | B143 | TH/TBH132MA6 | 39094 | 39094 |
| 24.1 | 1442 | 3.5 | 40.29 | B143 | TP/TBP132MA6 | 39094 | 39094 |
| 24.0 | 1383 | 1.9 | 119.60 | B123 | TBS100LB2 | 30000 | 11525 |
| 23.9 | 1451 | 2.0 | 40.53 | B123 | TH/TBH132MA6 | 30000 | 11447 |
| 23.9 | 1451 | 2.0 | 40.53 | B123 | TP/TBP132MA6 | 30000 | 11447 |
| 23.8 | 1457 | 3.5 | 40.29 | B143 | TBS132MA6 | 39195 | 39195 |
| 23.7 | 1466 | 2.0 | 40.53 | B123 | TBS132MA6 | 30000 | 11472 |
| 23.6 | 1472 | 1.2 | 41.12 | B103 | TH/TBH132MA6 | 22000 | 8245 |
| 23.6 | 1472 | 1.2 | 41.12 | B103 | TP/TBP132MA6 | 22000 | 8245 |
| 23.5 | 1411 | 2.7 | 124.62 | B143 | TH/TBH112M2 | 39536 | 39536 |
| 23.5 | 1411 | 2.7 | 124.62 | B143 | TP/TBP112M2 | 39536 | 39536 |
| 23.3 | 1487 | 1.2 | 41.12 | B103 | TBS132MA6 | 22000 | 8265 |
| 23.3 | 1426 | 2.6 | 124.62 | B143 | TBS112MA2 | 39639 | 39639 |
| 23.2 | 1484 | 2.2 | 62.59 | B123 | TH/TBH112M4 | 30000 | 11547 |
| 23.2 | 1484 | 2.2 | 62.59 | B123 | TP/TBP112M4 | 30000 | 11547 |
| 23.0 | 1494 | 2.2 | 62.59 | B123 | TBS112MA4 | 30000 | 11564 |
| 23.0 | 1441 | 2.6 | 124.62 | B143 | TBS100LB2 | 39744 | 39744 |
| 22.5 | 1472 | 1.8 | 129.96 | B123 | TH/TBH112M2 | 30000 | 11685 |
| 22.5 | 1472 | 1.8 | 129.96 | B123 | TP/TBP112M2 | 30000 | 11685 |
| 22.3 | 1538 | 1.1 | 64.89 | B103 | TH/TBH112M4 | 22000 | 8360 |
| 22.3 | 1538 | 1.1 | 64.89 | B103 | TP/TBP112M4 | 22000 | 8360 |
| 22.3 | 1487 | 1.8 | 129.96 | B123 | TBS112MA2 | 30000 | 11712 |
| 22.3 | 1538 | 3.3 | 64.88 | B143 | TH/TBH112M4 | 39874 | 39874 |
| 22.3 | 1538 | 3.3 | 64.88 | B143 | TP/TBP112M4 | 39874 | 39874 |
| 22.2 | 1549 | 1.1 | 64.89 | B103 | TBS112MA4 | 22000 | 8374 |
| 22.2 | 1549 | 3.2 | 64.88 | B143 | TBS112MA4 | 39942 | 39942 |
| 22.1 | 1502 | 1.7 | 129.96 | B123 | TBS100LB2 | 30000 | 11738 |
| 22.0 | 1581 | 3.2 | 44.16 | B143 | TH/TBH132MA6 | 39995 | 39995 |
| 22.0 | 1581 | 3.2 | 44.16 | B143 | TP/TBP132MA6 | 39995 | 39995 |
| 21.7 | 1597 | 1.1 | 44.61 | B103 | TH/TBH132MA6 | 22000 | 8400 |
| 21.7 | 1597 | 1.1 | 44.61 | B103 | TP/TBP132MA6 | 22000 | 8400 |
| 21.7 | 1597 | 3.2 | 44.16 | B143 | TBS132MA6 | 40000 | 40000 |
| 21.6 | 1607 | 2.0 | 44.89 | B123 | TH/TBH132MA6 | 30000 | 11700 |

# 5.1 B/BA MOTORIDUTTORE (50Hz)



## 4.00 kW

| n2 [rpm] | M2 [Nm] | fs | i | Riduttore | Motore | Fr2 D-S-P [N] | Fr2 C [N] |
|---|---|---|---|---|---|---|---|
| 21.6 | 1607 | 2.0 | 44.89 | B123 | TP/TBP132MA6 | 30000 | 11700 |
| 21.5 | 1614 | 1.1 | 44.61 | B103 | TBS132MA6 | 22000 | 8419 |
| 21.5 | 1545 | 2.4 | 136.44 | B143 | TH/TBH112M2 | 40000 | 40000 |
| 21.5 | 1545 | 2.4 | 136.44 | B143 | TP/TBP112M2 | 40000 | 40000 |
| 21.4 | 1624 | 1.9 | 44.89 | B123 | TBS132MA6 | 30000 | 11725 |
| 21.3 | 1561 | 2.4 | 136.44 | B143 | TBS112MA2 | 40000 | 40000 |
| 21.1 | 1626 | 1.0 | 68.58 | B103 | TH/TBH112M4 | 22000 | 8466 |
| 21.1 | 1626 | 1.0 | 68.58 | B103 | TP/TBP112M4 | 22000 | 8466 |
| 21.0 | 1637 | 1.0 | 68.58 | B103 | TBS112MA4 | 22000 | 8479 |
| 21.0 | 1577 | 2.4 | 136.44 | B143 | TBS100LB2 | 40000 | 40000 |
| 20.9 | 1646 | 2.0 | 69.43 | B123 | TH/TBH112M4 | 30000 | 11804 |
| 20.9 | 1646 | 2.0 | 69.43 | B123 | TP/TBP112M4 | 30000 | 11804 |
| 20.7 | 1658 | 2.0 | 69.43 | B123 | TBS112MA4 | 30000 | 11821 |
| 20.6 | 1670 | 3.0 | 70.43 | B143 | TH/TBH112M4 | 40000 | 40000 |
| 20.6 | 1670 | 3.0 | 70.43 | B143 | TP/TBP112M4 | 40000 | 40000 |
| 20.5 | 1693 | 1.1 | 47.28 | B103 | TH/TBH132MA6 | 22000 | 8509 |
| 20.5 | 1693 | 1.1 | 47.28 | B103 | TP/TBP132MA6 | 22000 | 8509 |
| 20.4 | 1682 | 3.0 | 70.43 | B143 | TBS112MA4 | 40000 | 40000 |
| 20.3 | 1710 | 1.0 | 47.28 | B103 | TBS132MA6 | 22000 | 8529 |
| 20.3 | 1635 | 1.6 | 144.43 | B123 | TH/TBH112M2 | 30000 | 11953 |
| 20.3 | 1635 | 1.6 | 144.43 | B123 | TP/TBP112M2 | 30000 | 11953 |
| 20.1 | 1652 | 1.6 | 144.43 | B123 | TBS112MA2 | 30000 | 11978 |
| 20.1 | 1731 | 3.0 | 48.35 | B143 | TH/TBH132MA6 | 40000 | 40000 |
| 20.1 | 1731 | 3.0 | 48.35 | B143 | TP/TBP132MA6 | 40000 | 40000 |
| 19.9 | 1725 | 1.0 | 72.76 | B103 | TH/TBH112M4 | 22000 | 8578 |
| 19.9 | 1725 | 1.0 | 72.76 | B103 | TP/TBP112M4 | 22000 | 8578 |
| 19.9 | 1670 | 1.6 | 144.43 | B123 | TBS100LB2 | 30000 | 12004 |
| 19.9 | 1749 | 3.0 | 48.35 | B143 | TBS132MA6 | 40000 | 40000 |
| 19.8 | 1737 | 1.0 | 72.76 | B103 | TBS112MA4 | 22000 | 8591 |
| 19.6 | 1694 | 2.2 | 149.59 | B143 | TH/TBH112M2 | 40000 | 40000 |
| 19.6 | 1694 | 2.2 | 149.59 | B143 | TP/TBP112M2 | 40000 | 40000 |
| 19.5 | 1783 | 1.9 | 49.80 | B123 | TH/TBH132MA6 | 30000 | 11950 |
| 19.5 | 1783 | 1.9 | 49.80 | B123 | TP/TBP132MA6 | 30000 | 11950 |
| 19.5 | 1764 | 2.0 | 74.42 | B123 | TH/TBH112M4 | 30000 | 11972 |
| 19.5 | 1764 | 2.0 | 74.42 | B123 | TP/TBP112M4 | 30000 | 11972 |
| 19.4 | 1777 | 2.0 | 74.42 | B123 | TBS112MA4 | 30000 | 11989 |
| 19.4 | 1711 | 2.2 | 149.59 | B143 | TBS112MA2 | 40000 | 40000 |
| 19.3 | 1798 | 1.0 | 50.24 | B103 | TH/TBH132MA6 | 22000 | 8623 |
| 19.3 | 1798 | 1.0 | 50.24 | B103 | TP/TBP132MA6 | 22000 | 8623 |
| 19.3 | 1801 | 1.9 | 49.80 | B123 | TBS132MA6 | 30000 | 11975 |
| 19.2 | 1729 | 2.2 | 149.59 | B143 | TBS100LB2 | 40000 | 40000 |

# 5.1 B/BA MOTORIDUTTORE (50Hz)



## 4.00 kW

| n2 [rpm] | M2 [Nm] | fs | i | Riduttore | Motore | Fr2 D-S-P [N] | Fr2 C [N] |
|---|---|---|---|---|---|---|---|
| 19.1 | 1817 | 1.0 | 50.24 | B103 | TBS132MA6 | 22000 | 8642 |
| 18.8 | 1828 | 2.7 | 77.12 | B143 | TH/TBH112M4 | 40000 | 40000 |
| 18.8 | 1828 | 2.7 | 77.12 | B143 | TP/TBP112M4 | 40000 | 40000 |
| 18.7 | 1841 | 2.7 | 77.12 | B143 | TBS112MA4 | 40000 | 40000 |
| 18.4 | 1871 | 0.9 | 78.92 | B103 | TH/TBH112M4 | 22000 | 8730 |
| 18.4 | 1871 | 0.9 | 78.92 | B103 | TP/TBP112M4 | 22000 | 8730 |
| 18.3 | 1898 | 0.9 | 53.02 | B103 | TH/TBH132MA6 | 22000 | 8722 |
| 18.3 | 1898 | 0.9 | 53.02 | B103 | TP/TBP132MA6 | 22000 | 8722 |
| 18.3 | 1814 | 1.4 | 160.23 | B123 | TH/TBH112M2 | 30000 | 12209 |
| 18.3 | 1814 | 1.4 | 160.23 | B123 | TP/TBP112M2 | 30000 | 12209 |
| 18.2 | 1884 | 0.9 | 78.92 | B103 | TBS112MA4 | 22000 | 8742 |
| 18.2 | 1903 | 2.8 | 53.16 | B143 | TH/TBH132MA6 | 40000 | 40000 |
| 18.2 | 1903 | 2.8 | 53.16 | B143 | TP/TBP132MA6 | 40000 | 40000 |
| 18.1 | 1918 | 0.9 | 53.02 | B103 | TBS132MA6 | 22000 | 8741 |
| 18.1 | 1833 | 1.4 | 160.23 | B123 | TBS112MA2 | 30000 | 12234 |
| 18.1 | 1898 | 1.8 | 80.04 | B123 | TH/TBH112M4 | 30000 | 12145 |
| 18.1 | 1898 | 1.8 | 80.04 | B123 | TP/TBP112M4 | 30000 | 12145 |
| 18.1 | 1923 | 2.7 | 53.16 | B143 | TBS132MA6 | 40000 | 40000 |
| 18.0 | 1911 | 1.8 | 80.04 | B123 | TBS112MA4 | 30000 | 12161 |
| 17.9 | 1944 | 1.7 | 54.30 | B123 | TH/TBH132MA6 | 30000 | 12152 |
| 17.9 | 1944 | 1.7 | 54.30 | B123 | TP/TBP132MA6 | 30000 | 12152 |
| 17.9 | 1852 | 1.4 | 160.23 | B123 | TBS100LB2 | 30000 | 12259 |
| 17.8 | 1956 | 2.7 | 54.63 | B143 | TH/TBH132MA6 | 40000 | 40000 |
| 17.8 | 1956 | 2.7 | 54.63 | B143 | TP/TBP132MA6 | 40000 | 40000 |
| 17.7 | 1964 | 1.7 | 54.30 | B123 | TBS132MA6 | 30000 | 12176 |
| 17.6 | 1976 | 2.7 | 54.63 | B143 | TBS132MA6 | 40000 | 40000 |
| 17.6 | 1886 | 2.0 | 166.53 | B143 | TH/TBH112M2 | 40000 | 40000 |
| 17.6 | 1886 | 2.0 | 166.53 | B143 | TP/TBP112M2 | 40000 | 40000 |
| 17.4 | 1905 | 2.0 | 166.53 | B143 | TBS112MA2 | 40000 | 40000 |
| 17.3 | 1984 | 0.9 | 83.66 | B103 | TH/TBH112M4 | 22000 | 8837 |
| 17.3 | 1984 | 0.9 | 83.66 | B103 | TP/TBP112M4 | 22000 | 8837 |
| 17.2 | 1997 | 0.9 | 83.66 | B103 | TBS112MA4 | 22000 | 8849 |
| 17.2 | 1925 | 1.9 | 166.53 | B143 | TBS100LB2 | 40000 | 40000 |
| 17.0 | 2028 | 2.5 | 85.54 | B143 | TH/TBH112M4 | 40000 | 40000 |
| 17.0 | 2028 | 2.5 | 85.54 | B143 | TP/TBP112M4 | 40000 | 40000 |
| 16.8 | 2042 | 2.4 | 85.54 | B143 | TBS112MA4 | 40000 | 40000 |
| 16.4 | 2113 | 2.5 | 59.02 | B143 | TH/TBH132MA6 | 40000 | 40000 |
| 16.4 | 2113 | 2.5 | 59.02 | B143 | TP/TBP132MA6 | 40000 | 40000 |
| 16.3 | 2125 | 1.6 | 59.36 | B123 | TH/TBH132MA6 | 30000 | 12353 |
| 16.3 | 2125 | 1.6 | 59.36 | B123 | TP/TBP132MA6 | 30000 | 12353 |
| 16.3 | 2135 | 2.5 | 59.02 | B143 | TBS132MA6 | 40000 | 40000 |

# 5.1 B/BA MOTORIDUTTORE (50Hz)



## 4.00 kW

| n2 [rpm] | M2 [Nm] | fs | i | Riduttore | Motore | Fr2 D-S-P [N] | Fr2 C [N] |
|---|---|---|---|---|---|---|---|
| 16.2 | 2147 | 1.6 | 59.36 | B123 | TBS132MA6 | 30000 | 12376 |
| 16.2 | 2043 | 1.3 | 180.40 | B123 | TH/TBH112M2 | 30000 | 12492 |
| 16.2 | 2043 | 1.3 | 180.40 | B123 | TP/TBP112M2 | 30000 | 12492 |
| 16.1 | 2064 | 1.3 | 180.40 | B123 | TBS112MA2 | 30000 | 12515 |
| 16.1 | 2131 | 1.6 | 89.87 | B123 | TH/TBH112M4 | 30000 | 12409 |
| 16.1 | 2131 | 1.6 | 89.87 | B123 | TP/TBP112M4 | 30000 | 12409 |
| 16.0 | 2146 | 1.6 | 89.87 | B123 | TBS112MA4 | 30000 | 12424 |
| 15.9 | 2085 | 1.3 | 180.40 | B123 | TBS100LB2 | 30000 | 12539 |
| 15.9 | 2181 | 3.9 | 60.92 | B153 | TH/TBH132MA6 | 65000 | 65000 |
| 15.9 | 2181 | 3.9 | 60.92 | B153 | TP/TBP132MA6 | 65000 | 65000 |
| 15.8 | 2204 | 3.8 | 60.92 | B153 | TBS132MA6 | 65000 | 65000 |
| 15.6 | 2120 | 1.8 | 187.24 | B143 | TH/TBH112M2 | 40000 | 40000 |
| 15.6 | 2120 | 1.8 | 187.24 | B143 | TP/TBP112M2 | 40000 | 40000 |
| 15.5 | 2240 | 1.5 | 62.59 | B123 | TH/TBH132MA6 | 30000 | 12468 |
| 15.5 | 2240 | 1.5 | 62.59 | B123 | TP/TBP132MA6 | 30000 | 12468 |
| 15.5 | 2142 | 1.8 | 187.24 | B143 | TBS112MA2 | 40000 | 40000 |
| 15.4 | 2232 | 2.2 | 94.13 | B143 | TH/TBH112M4 | 40000 | 40000 |
| 15.4 | 2232 | 2.2 | 94.13 | B143 | TP/TBP112M4 | 40000 | 40000 |
| 15.3 | 2264 | 1.5 | 62.59 | B123 | TBS132MA6 | 30000 | 12490 |
| 15.3 | 2247 | 2.2 | 94.13 | B143 | TBS112MA4 | 40000 | 40000 |
| 15.3 | 2164 | 1.7 | 187.24 | B143 | TBS100LB2 | 40000 | 40000 |
| 15.3 | 2272 | 3.7 | 63.47 | B153 | TH/TBH132MA6 | 65000 | 65000 |
| 15.3 | 2272 | 3.7 | 63.47 | B153 | TP/TBP132MA6 | 65000 | 65000 |
| 15.1 | 2296 | 3.7 | 63.47 | B153 | TBS132MA6 | 65000 | 65000 |
| 15.0 | 2323 | 2.3 | 64.88 | B143 | TH/TBH132MA6 | 40000 | 40000 |
| 15.0 | 2323 | 2.3 | 64.88 | B143 | TP/TBP132MA6 | 40000 | 40000 |
| 14.8 | 2347 | 2.2 | 64.88 | B143 | TBS132MA6 | 40000 | 40000 |
| 14.5 | 2364 | 1.5 | 99.70 | B123 | TH/TBH112M4 | 30000 | 12633 |
| 14.5 | 2364 | 1.5 | 99.70 | B123 | TP/TBP112M4 | 30000 | 12633 |
| 14.4 | 2380 | 1.5 | 99.70 | B123 | TBS112MA4 | 30000 | 12647 |
| 14.0 | 2486 | 1.4 | 69.43 | B123 | TH/TBH132MA6 | 30000 | 12683 |
| 14.0 | 2486 | 1.4 | 69.43 | B123 | TP/TBP132MA6 | 30000 | 12683 |
| 13.8 | 2511 | 1.4 | 69.43 | B123 | TBS132MA6 | 30000 | 12704 |
| 13.8 | 2521 | 2.1 | 70.43 | B143 | TH/TBH132MA6 | 40000 | 40000 |
| 13.8 | 2521 | 2.1 | 70.43 | B143 | TP/TBP132MA6 | 40000 | 40000 |
| 13.7 | 2509 | 2.0 | 105.83 | B143 | TH/TBH112M4 | 40000 | 40000 |
| 13.7 | 2509 | 2.0 | 105.83 | B143 | TP/TBP112M4 | 40000 | 40000 |
| 13.6 | 2529 | 1.4 | 106.65 | B123 | TH/TBH112M4 | 30000 | 12770 |
| 13.6 | 2529 | 1.4 | 106.65 | B123 | TP/TBP112M4 | 30000 | 12770 |
| 13.6 | 2527 | 2.0 | 105.83 | B143 | TBS112MA4 | 40000 | 40000 |
| 13.6 | 2548 | 2.1 | 70.43 | B143 | TBS132MA6 | 40000 | 40000 |

# 5.1 B/BA MOTORIDUTTORE (50Hz)



## 4.00 kW

| n2 [rpm] | M2 [Nm] | fs | i | Riduttore | Motore | Fr2 D-S-P [N] | Fr2 C [N] |
|---|---|---|---|---|---|---|---|
| 13.6 | 2547 | 3.3 | 71.15 | B153 | TH/TBH132MA6 | 65000 | 65000 |
| 13.6 | 2547 | 3.3 | 71.15 | B153 | TP/TBP132MA6 | 65000 | 65000 |
| 13.5 | 2546 | 1.4 | 106.65 | B123 | TBS112MA4 | 30000 | 12784 |
| 13.5 | 2573 | 3.3 | 71.15 | B153 | TBS132MA6 | 65000 | 65000 |
| 13.0 | 2664 | 1.4 | 74.42 | B123 | TH/TBH132MA6 | 30000 | 12818 |
| 13.0 | 2664 | 1.4 | 74.42 | B123 | TP/TBP132MA6 | 30000 | 12818 |
| 13.0 | 2654 | 1.9 | 111.94 | B143 | TH/TBH112M4 | 40000 | 40000 |
| 13.0 | 2654 | 1.9 | 111.94 | B143 | TP/TBP112M4 | 40000 | 40000 |
| 12.9 | 2692 | 1.4 | 74.42 | B123 | TBS132MA6 | 30000 | 12838 |
| 12.9 | 2673 | 1.9 | 111.94 | B143 | TBS112MA4 | 40000 | 40000 |
| 12.6 | 2761 | 1.9 | 77.12 | B143 | TH/TBH132MA6 | 40000 | 40000 |
| 12.6 | 2761 | 1.9 | 77.12 | B143 | TP/TBP132MA6 | 40000 | 40000 |
| 12.6 | 2764 | 3.0 | 77.22 | B153 | TH/TBH132MA6 | 65000 | 65000 |
| 12.6 | 2764 | 3.0 | 77.22 | B153 | TP/TBP132MA6 | 65000 | 65000 |
| 12.4 | 2789 | 1.9 | 77.12 | B143 | TBS132MA6 | 40000 | 40000 |
| 12.4 | 2793 | 3.0 | 77.22 | B153 | TBS132MA6 | 65000 | 65000 |
| 12.1 | 2836 | 1.2 | 119.60 | B123 | TH/TBH112M4 | 30000 | 12987 |
| 12.1 | 2836 | 1.2 | 119.60 | B123 | TP/TBP112M4 | 30000 | 12987 |
| 12.1 | 2865 | 1.3 | 80.04 | B123 | TH/TBH132MA6 | 30000 | 12951 |
| 12.1 | 2865 | 1.3 | 80.04 | B123 | TP/TBP132MA6 | 30000 | 12951 |
| 12.0 | 2895 | 1.3 | 80.04 | B123 | TBS132MA6 | 30000 | 12969 |
| 12.0 | 2855 | 1.2 | 119.60 | B123 | TBS112MA4 | 30000 | 13000 |
| 11.6 | 2955 | 1.7 | 124.62 | B143 | TH/TBH112M4 | 40000 | 40000 |
| 11.6 | 2955 | 1.7 | 124.62 | B143 | TP/TBP112M4 | 40000 | 40000 |
| 11.6 | 2975 | 1.7 | 124.62 | B143 | TBS112MA4 | 40000 | 40000 |
| 11.6 | 3003 | 2.8 | 83.89 | B153 | TH/TBH132MA6 | 65000 | 65000 |
| 11.6 | 3003 | 2.8 | 83.89 | B153 | TP/TBP132MA6 | 65000 | 65000 |
| 11.4 | 3034 | 2.8 | 83.89 | B153 | TBS132MA6 | 65000 | 65000 |
| 11.3 | 3062 | 1.7 | 85.54 | B143 | TH/TBH132MA6 | 40000 | 40000 |
| 11.3 | 3062 | 1.7 | 85.54 | B143 | TP/TBP132MA6 | 40000 | 40000 |
| 11.2 | 3081 | 1.1 | 129.96 | B123 | TH/TBH112M4 | 30000 | 13129 |
| 11.2 | 3081 | 1.1 | 129.96 | B123 | TP/TBP112M4 | 30000 | 13129 |
| 11.2 | 3094 | 1.7 | 85.54 | B143 | TBS132MA6 | 40000 | 40000 |
| 11.1 | 3103 | 1.1 | 129.96 | B123 | TBS112MA4 | 30000 | 13140 |
| 11.1 | 3138 | 2.7 | 87.65 | B153 | TH/TBH132MA6 | 65000 | 65000 |
| 11.1 | 3138 | 2.7 | 87.65 | B153 | TP/TBP132MA6 | 65000 | 65000 |
| 11.0 | 3170 | 2.6 | 87.65 | B153 | TBS132MA6 | 65000 | 65000 |
| 10.8 | 3217 | 1.1 | 89.87 | B123 | TH/TBH132MA6 | 30000 | 13140 |
| 10.8 | 3217 | 1.1 | 89.87 | B123 | TP/TBP132MA6 | 30000 | 13140 |
| 10.7 | 3251 | 1.1 | 89.87 | B123 | TBS132MA6 | 30000 | 13155 |
| 10.6 | 3235 | 1.5 | 136.44 | B143 | TH/TBH112M4 | 40000 | 40000 |

# 5.1 B/BA MOTORIDUTTORE (50Hz)



## 4.00 kW

| n2 [rpm] | M2 [Nm] | fs | i | Riduttore | Motore | Fr2 D-S-P [N] | Fr2 C [N] |
|---|---|---|---|---|---|---|---|
| 10.6 | 3235 | 1.5 | 136.44 | B143 | TP/TBP112M4 | 40000 | 40000 |
| 10.6 | 3257 | 1.5 | 136.44 | B143 | TBS112MA4 | 40000 | 40000 |
| 10.4 | 3331 | 2.5 | 93.05 | B153 | TH/TBH132MA6 | 65000 | 65000 |
| 10.4 | 3331 | 2.5 | 93.05 | B153 | TP/TBP132MA6 | 65000 | 65000 |
| 10.3 | 3370 | 1.6 | 94.13 | B143 | TH/TBH132MA6 | 40000 | 40000 |
| 10.3 | 3370 | 1.6 | 94.13 | B143 | TP/TBP132MA6 | 40000 | 40000 |
| 10.3 | 3366 | 2.5 | 93.05 | B153 | TBS132MA6 | 65000 | 65000 |
| 10.2 | 3405 | 1.5 | 94.13 | B143 | TBS132MA6 | 40000 | 40000 |
| 10.0 | 3424 | 1.0 | 144.43 | B123 | TH/TBH112M4 | 30000 | 13287 |
| 10.0 | 3424 | 1.0 | 144.43 | B123 | TP/TBP112M4 | 30000 | 13287 |
| 10.0 | 3448 | 1.0 | 144.43 | B123 | TBS112MA4 | 30000 | 13297 |
| 9.7 | 3569 | 1.0 | 99.70 | B123 | TH/TBH132MA6 | 30000 | 13283 |
| 9.7 | 3569 | 1.0 | 99.70 | B123 | TP/TBP132MA6 | 30000 | 13283 |
| 9.7 | 3547 | 1.4 | 149.59 | B143 | TH/TBH112M4 | 40000 | 40000 |
| 9.7 | 3547 | 1.4 | 149.59 | B143 | TP/TBP112M4 | 40000 | 40000 |
| 9.6 | 3606 | 1.0 | 99.70 | B123 | TBS132MA6 | 30000 | 13296 |
| 9.6 | 3571 | 1.4 | 149.59 | B143 | TBS112MA4 | 40000 | 40000 |
| 9.4 | 3691 | 2.3 | 103.12 | B153 | TH/TBH132MA6 | 65000 | 65000 |
| 9.4 | 3691 | 2.3 | 103.12 | B153 | TP/TBP132MA6 | 65000 | 65000 |
| 9.3 | 3730 | 2.3 | 103.12 | B153 | TBS132MA6 | 65000 | 65000 |
| 9.2 | 3788 | 1.4 | 105.83 | B143 | TH/TBH132MA6 | 40000 | 40000 |
| 9.2 | 3788 | 1.4 | 105.83 | B143 | TP/TBP132MA6 | 40000 | 40000 |
| 9.1 | 3818 | 1.0 | 106.65 | B123 | TH/TBH132MA6 | 30000 | 13360 |
| 9.1 | 3818 | 1.0 | 106.65 | B123 | TP/TBP132MA6 | 30000 | 13360 |
| 9.1 | 3828 | 1.4 | 105.83 | B143 | TBS132MA6 | 40000 | 40000 |
| 9.0 | 3858 | 1.0 | 106.65 | B123 | TBS132MA6 | 30000 | 13371 |
| 9.0 | 3799 | 0.9 | 160.23 | B123 | TH/TBH112M4 | 30000 | 13415 |
| 9.0 | 3799 | 0.9 | 160.23 | B123 | TP/TBP112M4 | 30000 | 13415 |
| 9.0 | 3825 | 0.9 | 160.23 | B123 | TBS112MA4 | 30000 | 13423 |
| 8.7 | 4007 | 1.3 | 111.94 | B143 | TH/TBH132MA6 | 40000 | 40000 |
| 8.7 | 4007 | 1.3 | 111.94 | B143 | TP/TBP132MA6 | 40000 | 40000 |
| 8.7 | 3949 | 1.3 | 166.53 | B143 | TH/TBH112M4 | 40000 | 40000 |
| 8.7 | 3949 | 1.3 | 166.53 | B143 | TP/TBP112M4 | 40000 | 40000 |
| 8.6 | 4049 | 1.3 | 111.94 | B143 | TBS132MA6 | 40000 | 40000 |
| 8.6 | 3976 | 1.3 | 166.53 | B143 | TBS112MA4 | 40000 | 40000 |
| 7.8 | 4461 | 1.2 | 124.62 | B143 | TH/TBH132MA6 | 40000 | 40000 |
| 7.8 | 4461 | 1.2 | 124.62 | B143 | TP/TBP132MA6 | 40000 | 40000 |
| 7.8 | 4435 | 1.9 | 123.88 | B153 | TH/TBH132MA6 | 65000 | 65000 |
| 7.8 | 4435 | 1.9 | 123.88 | B153 | TP/TBP132MA6 | 65000 | 65000 |
| 7.7 | 4507 | 1.2 | 124.62 | B143 | TBS132MA6 | 40000 | 40000 |
| 7.7 | 4439 | 1.1 | 187.24 | B143 | TH/TBH112M4 | 40000 | 40000 |

# 5.1 B/BA MOTORIDUTTORE (50Hz)



## 4.00 kW

| n2 [rpm] | M2 [Nm] | fs | i | Riduttore | Motore | Fr2 D-S-P [N] | Fr2 C [N] |
|---|---|---|---|---|---|---|---|
| 7.7 | 4439 | 1.1 | 187.24 | B143 | TP/TBP112M4 | 40000 | 40000 |
| 7.7 | 4470 | 1.1 | 187.24 | B143 | TBS112MA4 | 40000 | 40000 |
| 7.7 | 4481 | 1.9 | 123.88 | B153 | TBS132MA6 | 65000 | 65000 |
| 7.2 | 4806 | 1.7 | 134.27 | B153 | TH/TBH132MA6 | 65000 | 65000 |
| 7.2 | 4806 | 1.7 | 134.27 | B153 | TP/TBP132MA6 | 65000 | 65000 |
| 7.2 | 4856 | 1.7 | 134.27 | B153 | TBS132MA6 | 65000 | 65000 |
| 7.1 | 4884 | 1.1 | 136.44 | B143 | TH/TBH132MA6 | 40000 | 40000 |
| 7.1 | 4884 | 1.1 | 136.44 | B143 | TP/TBP132MA6 | 40000 | 40000 |
| 7.0 | 4935 | 1.1 | 136.44 | B143 | TBS132MA6 | 40000 | 40000 |
| 6.5 | 5355 | 1.0 | 149.59 | B143 | TH/TBH132MA6 | 40000 | 40000 |
| 6.5 | 5355 | 1.0 | 149.59 | B143 | TP/TBP132MA6 | 40000 | 40000 |
| 6.5 | 5343 | 1.6 | 149.26 | B153 | TH/TBH132MA6 | 65000 | 65000 |
| 6.5 | 5343 | 1.6 | 149.26 | B153 | TP/TBP132MA6 | 65000 | 65000 |
| 6.4 | 5411 | 1.0 | 149.59 | B143 | TBS132MA6 | 40000 | 40000 |
| 6.4 | 5399 | 1.6 | 149.26 | B153 | TBS132MA6 | 65000 | 65000 |
| 5.9 | 5921 | 1.4 | 165.42 | B153 | TH/TBH132MA6 | 65000 | 65000 |
| 5.9 | 5921 | 1.4 | 165.42 | B153 | TP/TBP132MA6 | 65000 | 65000 |
| 5.8 | 5983 | 1.4 | 165.42 | B153 | TBS132MA6 | 65000 | 65000 |

## 4.80 kW

| n2 [rpm] | M2 [Nm] | fs | i | Riduttore | Motore | Fr2 D-S-P [N] | Fr2 C [N] |
|---|---|---|---|---|---|---|---|
| 250.2 | 165 | 1.8 | 5.71 | B063 | TBS112MB4 | 7541 | 2155 |
| 207.9 | 198 | 1.7 | 6.88 | B063 | TBS112MB4 | 7912 | 2261 |
| 195.3 | 211 | 1.7 | 7.32 | B063 | TBS112MB4 | 8038 | 2297 |
| 183.1 | 225 | 2.2 | 7.81 | B083 | TBS112MB4 | 12993 | 3712 |
| 176.0 | 234 | 3.4 | 8.13 | B103 | TBS112MB4 | 16375 | 4678 |
| 171.1 | 255 | 1.4 | 8.36 | BA72 | TBS112MB4 | 5043 | 2522 |
| 165.8 | 249 | 2.4 | 8.62 | B083 | TBS112MB4 | 13361 | 3817 |
| 159.5 | 259 | 3.5 | 8.97 | B103 | TBS112MB4 | 16868 | 4819 |
| 156.1 | 264 | 1.7 | 9.16 | B063 | TBS112MB4 | 8488 | 2425 |
| 142.2 | 306 | 1.1 | 10.06 | BA72 | TBS112MB4 | 5365 | 2682 |
| 139.3 | 296 | 1.8 | 10.26 | B063 | TBS112MB4 | 8714 | 2490 |
| 136.3 | 303 | 2.1 | 10.49 | B083 | TBS112MB4 | 14104 | 4030 |
| 130.9 | 315 | 3.2 | 10.92 | B103 | TBS112MB4 | 17889 | 5111 |
| 129.7 | 318 | 1.7 | 11.03 | B063 | TBS112MB4 | 8856 | 2530 |
| 123.4 | 334 | 2.2 | 11.59 | B083 | TBS112MB4 | 14486 | 4139 |
| 118.7 | 348 | 2.9 | 12.05 | B103 | TBS112MB4 | 18416 | 5262 |
| 115.7 | 356 | 1.6 | 12.35 | B063 | TBS112MB4 | 9076 | 2593 |
| 114.9 | 379 | 0.9 | 12.44 | BA72 | TBS112MB4 | 5759 | 2879 |
| 108.7 | 379 | 1.6 | 13.15 | B063 | TBS112MB4 | 9195 | 2627 |

# 5.1 B/BA MOTORIDUTTORE (50Hz)



## 4.80 kW

| n2 [rpm] | M2 [Nm] | fs | i | Riduttore | Motore | Fr2 D-S-P [N] | Fr2 C [N] |
|---|---|---|---|---|---|---|---|
| 99.1 | 416 | 1.9 | 14.43 | B083 | TBS112MB4 | 15343 | 4384 |
| 95.9 | 454 | 0.9 | 14.91 | BA72 | TBS112MB4 | 6116 | 3058 |
| 95.4 | 432 | 2.8 | 14.99 | B103 | TBS112MB4 | 19621 | 5606 |
| 94.2 | 438 | 1.3 | 15.18 | B063 | TBS112MB4 | 9459 | 2703 |
| 86.2 | 479 | 1.8 | 16.60 | B083 | TBS112MB4 | 15895 | 4541 |
| 84.1 | 491 | 1.2 | 17.00 | B063 | TBS112MB4 | 9659 | 2760 |
| 82.8 | 498 | 2.8 | 17.27 | B103 | TBS112MB4 | 20431 | 5837 |
| 78.0 | 529 | 1.6 | 18.32 | B083 | TBS112MB4 | 16286 | 4653 |
| 75.0 | 550 | 2.5 | 19.06 | B103 | TBS112MB4 | 21005 | 6001 |
| 63.9 | 646 | 0.9 | 22.39 | B063 | TBS112MB4 | 10086 | 2882 |
| 62.7 | 658 | 1.3 | 22.82 | B083 | TBS112MB4 | 17144 | 4898 |
| 60.3 | 684 | 2.0 | 23.70 | B103 | TBS112MB4 | 22000 | 6373 |
| 55.2 | 747 | 3.7 | 25.89 | B123 | TBS112MB4 | 30000 | 9151 |
| 53.9 | 765 | 2.0 | 26.51 | B103 | TBS112MB4 | 22000 | 6568 |
| 53.5 | 771 | 1.1 | 26.71 | B083 | TBS112MB4 | 17747 | 5071 |
| 48.5 | 851 | 1.0 | 29.50 | B083 | TBS112MB4 | 18000 | 5176 |
| 46.8 | 882 | 1.8 | 30.55 | B103 | TBS112MB4 | 22000 | 6817 |
| 45.7 | 902 | 3.1 | 31.26 | B123 | TBS112MB4 | 30000 | 9598 |
| 45.0 | 917 | 0.9 | 31.80 | B083 | TBS112MB4 | 18000 | 5254 |
| 43.2 | 954 | 1.8 | 33.07 | B103 | TBS112MB4 | 22000 | 6956 |
| 41.2 | 1001 | 2.8 | 34.68 | B123 | TBS112MB4 | 30000 | 9844 |
| 39.9 | 1035 | 1.6 | 35.87 | B103 | TBS112MB4 | 22000 | 7101 |
| 35.3 | 1169 | 2.4 | 40.53 | B123 | TBS112MB4 | 30000 | 10211 |
| 34.8 | 1186 | 1.4 | 41.12 | B103 | TBS112MB4 | 22000 | 7343 |
| 32.4 | 1274 | 3.8 | 44.16 | B143 | TBS112MB4 | 35559 | 35559 |
| 32.1 | 1287 | 1.3 | 44.61 | B103 | TBS112MB4 | 22000 | 7487 |
| 31.9 | 1295 | 2.3 | 44.89 | B123 | TBS112MB4 | 30000 | 10449 |
| 30.2 | 1364 | 1.2 | 47.28 | B103 | TBS112MB4 | 22000 | 7589 |
| 29.6 | 1395 | 3.6 | 48.35 | B143 | TBS112MB4 | 36376 | 36376 |
| 28.7 | 1437 | 2.2 | 49.80 | B123 | TBS112MB4 | 30000 | 10686 |
| 28.5 | 1449 | 1.2 | 50.24 | B103 | TBS112MB4 | 22000 | 7695 |
| 27.0 | 1530 | 1.1 | 53.02 | B103 | TBS112MB4 | 22000 | 7789 |
| 26.9 | 1534 | 3.3 | 53.16 | B143 | TBS112MB4 | 37231 | 37231 |
| 26.3 | 1567 | 2.0 | 54.30 | B123 | TBS112MB4 | 30000 | 10880 |
| 26.2 | 1576 | 3.2 | 54.63 | B143 | TBS112MB4 | 37477 | 37477 |
| 24.4 | 1688 | 1.0 | 58.50 | B103 | TBS112MB4 | 22000 | 7957 |
| 24.2 | 1703 | 2.9 | 59.02 | B143 | TBS112MB4 | 38170 | 38170 |
| 24.1 | 1712 | 1.9 | 59.36 | B123 | TBS112MB4 | 30000 | 11074 |
| 22.8 | 1806 | 1.8 | 62.59 | B123 | TBS112MB4 | 30000 | 11186 |
| 22.0 | 1872 | 0.9 | 64.89 | B103 | TBS112MB4 | 22000 | 8131 |
| 22.0 | 1872 | 2.7 | 64.88 | B143 | TBS112MB4 | 39016 | 39016 |

# 5.1 B/BA MOTORIDUTTORE (50Hz)



## 4.80 kW

| n2 [rpm] | M2 [Nm] | fs | i | Riduttore | Motore | Fr2 D-S-P [N] | Fr2 C [N] |
|---|---|---|---|---|---|---|---|
| 20.6 | 2003 | 1.6 | 69.43 | B123 | TBS112MB4 | 30000 | 11400 |
| 20.3 | 2032 | 2.5 | 70.43 | B143 | TBS112MB4 | 39740 | 39740 |
| 19.2 | 2147 | 1.6 | 74.42 | B123 | TBS112MB4 | 30000 | 11535 |
| 18.5 | 2225 | 2.2 | 77.12 | B143 | TBS112MB4 | 40000 | 40000 |
| 17.9 | 2309 | 1.5 | 80.04 | B123 | TBS112MB4 | 30000 | 11672 |
| 16.7 | 2468 | 2.0 | 85.54 | B143 | TBS112MB4 | 40000 | 40000 |
| 15.9 | 2593 | 1.3 | 89.87 | B123 | TBS112MB4 | 30000 | 11872 |
| 15.2 | 2716 | 1.8 | 94.13 | B143 | TBS112MB4 | 40000 | 40000 |
| 14.3 | 2876 | 1.2 | 99.70 | B123 | TBS112MB4 | 30000 | 12032 |
| 13.5 | 3053 | 1.6 | 105.83 | B143 | TBS112MB4 | 40000 | 40000 |
| 13.4 | 3077 | 1.1 | 106.65 | B123 | TBS112MB4 | 30000 | 12124 |
| 12.8 | 3229 | 1.5 | 111.94 | B143 | TBS112MB4 | 40000 | 40000 |
| 12.0 | 3450 | 1.0 | 119.60 | B123 | TBS112MB4 | 30000 | 12257 |
| 11.5 | 3595 | 1.4 | 124.62 | B143 | TBS112MB4 | 40000 | 40000 |
| 11.0 | 3749 | 0.9 | 129.96 | B123 | TBS112MB4 | 30000 | 12331 |
| 10.5 | 3936 | 1.3 | 136.44 | B143 | TBS112MB4 | 40000 | 40000 |
| 9.6 | 4316 | 1.2 | 149.59 | B143 | TBS112MB4 | 40000 | 40000 |
| 8.6 | 4804 | 1.0 | 166.53 | B143 | TBS112MB4 | 40000 | 40000 |
| 7.6 | 5402 | 0.9 | 187.24 | B143 | TBS112MB4 | 40000 | 40000 |

## 5.50 kW

| n2 [rpm] | M2 [Nm] | fs | i | Riduttore | Motore | Fr2 D-S-P [N] | Fr2 C [N] |
|---|---|---|---|---|---|---|---|
| 423.0 | 108 | 2.4 | 6.88 | B063 | TBS112MB2 | 6480 | 1851 |
| 397.4 | 115 | 2.3 | 7.32 | B063 | TBS112MB2 | 6594 | 1884 |
| 377.7 | 121 | 3.1 | 7.81 | B083 | TP/TBP132S2 | 10461 | 2989 |
| 376.5 | 121 | 3.1 | 7.81 | B083 | TH/TBH132SA2 | 10471 | 2992 |
| 372.6 | 122 | 3.1 | 7.81 | B083 | TBS112MB2 | 10503 | 3001 |
| 372.6 | 122 | 3.1 | 7.81 | B083 | TBS132SA2 | 10503 | 3001 |
| 348.2 | 138 | 1.9 | 8.36 | BA72 | TBS112MB2 | 3980 | 1990 |
| 342.1 | 133 | 3.4 | 8.62 | B083 | TP/TBP132S2 | 10774 | 3078 |
| 340.9 | 134 | 3.4 | 8.62 | B083 | TH/TBH132SA2 | 10785 | 3081 |
| 337.5 | 135 | 3.3 | 8.62 | B083 | TBS112MB2 | 10817 | 3091 |
| 337.5 | 135 | 3.3 | 8.62 | B083 | TBS132SA2 | 10817 | 3091 |
| 289.3 | 166 | 1.6 | 10.06 | BA72 | TBS112MB2 | 4233 | 2117 |
| 281.1 | 162 | 3.0 | 10.49 | B083 | TP/TBP132S2 | 11414 | 3261 |
| 280.2 | 163 | 3.0 | 10.49 | B083 | TH/TBH132SA2 | 11425 | 3264 |
| 277.3 | 165 | 3.0 | 10.49 | B083 | TBS112MB2 | 11460 | 3274 |
| 277.3 | 165 | 3.0 | 10.49 | B083 | TBS132SA2 | 11460 | 3274 |
| 263.9 | 173 | 2.3 | 11.03 | B063 | TBS112MB2 | 7361 | 2103 |
| 254.6 | 179 | 3.1 | 11.59 | B083 | TP/TBP132S2 | 11747 | 3356 |

# 5.1 B/BA MOTORIDUTTORE (50Hz)



## 5.50 kW

| n2 [rpm] | M2 [Nm] | fs | i | Riduttore | Motore | Fr2 D-S-P [N] | Fr2 C [N] |
|---|---|---|---|---|---|---|---|
| 253.7 | 180 | 3.1 | 11.59 | B083 | TH/TBH132SA2 | 11758 | 3360 |
| 251.1 | 182 | 3.1 | 11.59 | B083 | TBS112MB2 | 11793 | 3370 |
| 251.1 | 182 | 3.1 | 11.59 | B083 | TBS132SA2 | 11793 | 3370 |
| 241.5 | 189 | 4.0 | 12.05 | B103 | TBS112MB2 | 14814 | 4233 |
| 241.5 | 189 | 4.0 | 12.05 | B103 | TBS132SA2 | 14814 | 4233 |
| 233.9 | 206 | 1.3 | 12.44 | BA72 | TBS112MB2 | 4544 | 2272 |
| 221.3 | 206 | 2.1 | 13.15 | B063 | TBS112MB2 | 7698 | 2199 |
| 204.4 | 223 | 2.7 | 14.43 | B083 | TP/TBP132S2 | 12505 | 3573 |
| 203.8 | 224 | 2.7 | 14.43 | B083 | TH/TBH132SA2 | 12517 | 3576 |
| 201.7 | 226 | 2.7 | 14.43 | B083 | TBS112MB2 | 12554 | 3587 |
| 201.7 | 226 | 2.7 | 14.43 | B083 | TBS132SA2 | 12554 | 3587 |
| 196.9 | 232 | 3.9 | 14.99 | B103 | TP/TBP132S2 | 15763 | 4504 |
| 196.2 | 233 | 3.9 | 14.99 | B103 | TH/TBH132SA2 | 15779 | 4508 |
| 195.2 | 247 | 1.3 | 14.91 | BA72 | TBS112MB2 | 4826 | 2413 |
| 194.2 | 235 | 3.8 | 14.99 | B103 | TBS112MB2 | 15828 | 4522 |
| 194.2 | 235 | 3.8 | 14.99 | B103 | TBS132SA2 | 15828 | 4522 |
| 191.8 | 238 | 1.9 | 15.18 | B063 | TBS112MB2 | 7972 | 2278 |
| 188.2 | 251 | 2.0 | 7.81 | B083 | TP/TBP132MS4 | 12763 | 3646 |
| 187.0 | 253 | 2.0 | 7.81 | B083 | TH/TBH132S4 | 12787 | 3653 |
| 185.7 | 255 | 2.0 | 7.81 | B083 | TBS132S4 | 12811 | 3660 |
| 180.9 | 261 | 3.1 | 8.13 | B103 | TP/TBP132MS4 | 16143 | 4612 |
| 179.6 | 263 | 3.0 | 8.13 | B103 | TH/TBH132S4 | 16176 | 4622 |
| 178.4 | 265 | 3.0 | 8.13 | B103 | TBS132S4 | 16209 | 4631 |
| 177.8 | 257 | 2.5 | 16.60 | B083 | TP/TBP132S2 | 13003 | 3715 |
| 177.2 | 257 | 2.5 | 16.60 | B083 | TH/TBH132SA2 | 13015 | 3719 |
| 175.4 | 260 | 2.5 | 16.60 | B083 | TBS112MB2 | 13052 | 3729 |
| 175.4 | 260 | 2.5 | 16.60 | B083 | TBS132SA2 | 13052 | 3729 |
| 171.2 | 267 | 1.7 | 17.00 | B063 | TBS112MB2 | 8188 | 2339 |
| 170.8 | 267 | 3.9 | 17.27 | B103 | TP/TBP132S2 | 16449 | 4700 |
| 170.5 | 277 | 2.2 | 8.62 | B083 | TP/TBP132MS4 | 13115 | 3747 |
| 170.2 | 268 | 3.9 | 17.27 | B103 | TH/TBH132SA2 | 16465 | 4704 |
| 169.3 | 279 | 2.1 | 8.62 | B083 | TH/TBH132S4 | 13139 | 3754 |
| 168.5 | 271 | 3.9 | 17.27 | B103 | TBS112MB2 | 16516 | 4719 |
| 168.5 | 271 | 3.9 | 17.27 | B103 | TBS132SA2 | 16516 | 4719 |
| 168.2 | 281 | 2.1 | 8.62 | B083 | TBS132S4 | 13164 | 3761 |
| 163.9 | 288 | 3.1 | 8.97 | B103 | TP/TBP132MS4 | 16623 | 4749 |
| 162.8 | 290 | 3.1 | 8.97 | B103 | TH/TBH132S4 | 16656 | 4759 |
| 162.2 | 297 | 1.1 | 17.94 | BA72 | TBS112MB2 | 5134 | 2567 |
| 161.7 | 292 | 3.1 | 8.97 | B103 | TBS132S4 | 16690 | 4769 |
| 161.0 | 283 | 2.2 | 18.32 | B083 | TP/TBP132S2 | 13362 | 3818 |
| 160.4 | 284 | 2.2 | 18.32 | B083 | TH/TBH132SA2 | 13374 | 3821 |

# 5.1 B/BA MOTORIDUTTORE (50Hz)



## 5.50 kW

| n2 [rpm] | M2 [Nm] | fs | i | Riduttore | Motore | Fr2 D-S-P [N] | Fr2 C [N] |
|---|---|---|---|---|---|---|---|
| 158.8 | 287 | 2.2 | 18.32 | B083 | TBS112MB2 | 13412 | 3832 |
| 158.8 | 287 | 2.2 | 18.32 | B083 | TBS132SA2 | 13412 | 3832 |
| 154.8 | 295 | 3.6 | 19.06 | B103 | TP/TBP132S2 | 16937 | 4839 |
| 154.3 | 296 | 3.6 | 19.06 | B103 | TH/TBH132SA2 | 16954 | 4844 |
| 152.7 | 299 | 3.5 | 19.06 | B103 | TBS112MB2 | 17006 | 4859 |
| 152.7 | 299 | 3.5 | 19.06 | B103 | TBS132SA2 | 17006 | 4859 |
| 140.1 | 337 | 1.9 | 10.49 | B083 | TP/TBP132MS4 | 13825 | 3950 |
| 139.1 | 340 | 1.9 | 10.49 | B083 | TH/TBH132S4 | 13850 | 3957 |
| 138.2 | 342 | 1.9 | 10.49 | B083 | TBS132S4 | 13875 | 3964 |
| 134.6 | 351 | 2.8 | 10.92 | B103 | TP/TBP132MS4 | 17615 | 5033 |
| 133.7 | 354 | 2.8 | 10.92 | B103 | TH/TBH132S4 | 17650 | 5043 |
| 132.8 | 356 | 2.8 | 10.92 | B103 | TBS132S4 | 17685 | 5053 |
| 130.0 | 351 | 1.3 | 22.39 | B063 | TBS112MB2 | 8700 | 2486 |
| 129.3 | 353 | 1.8 | 22.82 | B083 | TP/TBP132S2 | 14170 | 4049 |
| 128.8 | 354 | 1.8 | 22.82 | B083 | TH/TBH132SA2 | 14182 | 4052 |
| 127.5 | 358 | 1.8 | 22.82 | B083 | TBS112MB2 | 14221 | 4063 |
| 127.5 | 358 | 1.8 | 22.82 | B083 | TBS132SA2 | 14221 | 4063 |
| 126.9 | 373 | 2.0 | 11.59 | B083 | TP/TBP132MS4 | 14187 | 4054 |
| 126.0 | 375 | 2.0 | 11.59 | B083 | TH/TBH132S4 | 14212 | 4061 |
| 125.1 | 378 | 2.0 | 11.59 | B083 | TBS132S4 | 14238 | 4068 |
| 124.5 | 366 | 2.9 | 23.70 | B103 | TP/TBP132S2 | 18058 | 5159 |
| 124.2 | 384 | 1.4 | 7.81 | B083 | TH/TBH132MB6 | 14250 | 4071 |
| 124.2 | 384 | 1.4 | 7.81 | B083 | TP/TBP132MB6 | 14250 | 4071 |
| 124.1 | 368 | 2.9 | 23.70 | B103 | TH/TBH132SA2 | 18076 | 5164 |
| 122.9 | 388 | 1.4 | 7.81 | B083 | TBS132MB6 | 14288 | 4082 |
| 122.8 | 372 | 2.8 | 23.70 | B103 | TBS112MB2 | 18130 | 5180 |
| 122.8 | 372 | 2.8 | 23.70 | B103 | TBS132SA2 | 18130 | 5180 |
| 122.0 | 388 | 2.6 | 12.05 | B103 | TP/TBP132MS4 | 18125 | 5179 |
| 121.2 | 390 | 2.6 | 12.05 | B103 | TH/TBH132S4 | 18161 | 5189 |
| 120.5 | 396 | 4.0 | 7.97 | B123 | TBS132MB6 | 25591 | 7312 |
| 120.3 | 393 | 2.5 | 12.05 | B103 | TBS132S4 | 18197 | 5199 |
| 119.4 | 400 | 2.1 | 8.13 | B103 | TH/TBH132MB6 | 18228 | 5208 |
| 119.4 | 400 | 2.1 | 8.13 | B103 | TP/TBP132MB6 | 18228 | 5208 |
| 118.1 | 404 | 2.1 | 8.13 | B103 | TBS132MB6 | 18283 | 5224 |
| 112.5 | 424 | 1.5 | 8.62 | B083 | TH/TBH132MB6 | 14613 | 4175 |
| 112.5 | 424 | 1.5 | 8.62 | B083 | TP/TBP132MB6 | 14613 | 4175 |
| 111.5 | 409 | 1.1 | 26.09 | B063 | TBS112MB2 | 8971 | 2563 |
| 111.3 | 429 | 1.5 | 8.62 | B083 | TBS132MB6 | 14651 | 4186 |
| 111.3 | 410 | 2.7 | 26.51 | B103 | TP/TBP132S2 | 18654 | 5330 |
| 110.9 | 411 | 2.7 | 26.51 | B103 | TH/TBH132SA2 | 18672 | 5335 |
| 110.4 | 413 | 1.5 | 26.71 | B083 | TP/TBP132S2 | 14759 | 4217 |

# 5.1 B/BA MOTORIDUTTORE (50Hz)



## 5.50 kW

| n2 [rpm] | M2 [Nm] | fs | i | Riduttore | Motore | Fr2 D-S-P [N] | Fr2 C [N] |
|---|---|---|---|---|---|---|---|
| 110.1 | 415 | 1.5 | 26.71 | B083 | TH/TBH132SA2 | 14772 | 4220 |
| 109.8 | 416 | 2.7 | 26.51 | B103 | TBS112MB2 | 18727 | 5351 |
| 109.8 | 416 | 2.7 | 26.51 | B103 | TBS132SA2 | 18727 | 5351 |
| 108.9 | 419 | 1.5 | 26.71 | B083 | TBS112MB2 | 14810 | 4231 |
| 108.9 | 419 | 1.5 | 26.71 | B083 | TBS132SA2 | 14810 | 4231 |
| 108.2 | 441 | 2.1 | 8.97 | B103 | TH/TBH132MB6 | 18749 | 5357 |
| 108.2 | 441 | 2.1 | 8.97 | B103 | TP/TBP132MB6 | 18749 | 5357 |
| 107.1 | 446 | 2.1 | 8.97 | B103 | TBS132MB6 | 18804 | 5373 |
| 103.8 | 439 | 1.0 | 28.03 | B063 | TBS112MB2 | 9093 | 2598 |
| 101.9 | 464 | 1.7 | 14.43 | B083 | TP/TBP132MS4 | 14996 | 4285 |
| 101.2 | 467 | 1.7 | 14.43 | B083 | TH/TBH132S4 | 15021 | 4292 |
| 100.8 | 473 | 4.0 | 9.62 | B123 | TH/TBH132MB6 | 26896 | 7685 |
| 100.8 | 473 | 4.0 | 9.62 | B123 | TP/TBP132MB6 | 26896 | 7685 |
| 100.5 | 470 | 1.7 | 14.43 | B083 | TBS132S4 | 15046 | 4299 |
| 100.0 | 456 | 1.4 | 29.50 | B083 | TP/TBP132S2 | 15131 | 4323 |
| 99.8 | 478 | 4.0 | 9.62 | B123 | TBS132MB6 | 26973 | 7707 |
| 99.7 | 458 | 1.4 | 29.50 | B083 | TH/TBH132SA2 | 15144 | 4327 |
| 98.7 | 462 | 1.4 | 29.50 | B083 | TBS112MB2 | 15182 | 4338 |
| 98.7 | 462 | 1.4 | 29.50 | B083 | TBS132SA2 | 15182 | 4338 |
| 98.1 | 482 | 2.5 | 14.99 | B103 | TP/TBP132MS4 | 19289 | 5511 |
| 97.4 | 485 | 2.5 | 14.99 | B103 | TH/TBH132S4 | 19326 | 5522 |
| 96.8 | 489 | 2.5 | 14.99 | B103 | TBS132S4 | 19364 | 5532 |
| 96.5 | 472 | 2.5 | 30.55 | B103 | TP/TBP132S2 | 19425 | 5550 |
| 96.2 | 474 | 2.5 | 30.55 | B103 | TH/TBH132SA2 | 19443 | 5555 |
| 95.2 | 479 | 2.5 | 30.55 | B103 | TBS112MB2 | 19500 | 5571 |
| 95.2 | 479 | 2.5 | 30.55 | B103 | TBS132SA2 | 19500 | 5571 |
| 92.8 | 492 | 1.3 | 31.80 | B083 | TP/TBP132S2 | 15413 | 4404 |
| 92.5 | 493 | 1.3 | 31.80 | B083 | TH/TBH132SA2 | 15426 | 4407 |
| 92.4 | 517 | 1.3 | 10.49 | B083 | TH/TBH132MB6 | 15334 | 4381 |
| 92.4 | 517 | 1.3 | 10.49 | B083 | TP/TBP132MB6 | 15334 | 4381 |
| 91.5 | 522 | 1.3 | 10.49 | B083 | TBS132MB6 | 15372 | 4392 |
| 91.5 | 498 | 1.3 | 31.80 | B083 | TBS112MB2 | 15464 | 4418 |
| 91.5 | 498 | 1.3 | 31.80 | B083 | TBS132SA2 | 15464 | 4418 |
| 89.2 | 511 | 2.5 | 33.07 | B103 | TP/TBP132S2 | 19862 | 5675 |
| 88.9 | 513 | 2.5 | 33.07 | B103 | TH/TBH132SA2 | 19881 | 5680 |
| 88.8 | 538 | 2.0 | 10.92 | B103 | TH/TBH132MB6 | 19818 | 5662 |
| 88.8 | 538 | 2.0 | 10.92 | B103 | TP/TBP132MB6 | 19818 | 5662 |
| 88.6 | 534 | 1.6 | 16.60 | B083 | TP/TBP132MS4 | 15511 | 4432 |
| 88.0 | 537 | 1.6 | 16.60 | B083 | TH/TBH132S4 | 15536 | 4439 |
| 88.0 | 518 | 2.5 | 33.07 | B103 | TBS112MB2 | 19938 | 5697 |
| 88.0 | 518 | 2.5 | 33.07 | B103 | TBS132SA2 | 19938 | 5697 |

# 5.1 B/BA MOTORIDUTTORE (50Hz)



## 5.50 kW

| n2 [rpm] | M2 [Nm] | fs | i | Riduttore | Motore | Fr2 D-S-P [N] | Fr2 C [N] |
|---|---|---|---|---|---|---|---|
| 87.9 | 543 | 1.9 | 10.92 | B103 | TBS132MB6 | 19875 | 5678 |
| 87.4 | 541 | 1.6 | 16.60 | B083 | TBS132S4 | 15561 | 4446 |
| 85.5 | 533 | 1.2 | 34.49 | B083 | TP/TBP132S2 | 15718 | 4491 |
| 85.2 | 535 | 1.2 | 34.49 | B083 | TH/TBH132SA2 | 15731 | 4494 |
| 85.1 | 555 | 2.5 | 17.27 | B103 | TP/TBP132MS4 | 20069 | 5734 |
| 85.1 | 536 | 3.9 | 34.68 | B123 | TP/TBP132S2 | 28287 | 8082 |
| 84.8 | 538 | 3.9 | 34.68 | B123 | TH/TBH132SA2 | 28313 | 8090 |
| 84.5 | 559 | 2.5 | 17.27 | B103 | TH/TBH132S4 | 20107 | 5745 |
| 84.4 | 541 | 1.2 | 34.49 | B083 | TBS112MB2 | 15769 | 4505 |
| 84.4 | 541 | 1.2 | 34.49 | B083 | TBS132SA2 | 15769 | 4505 |
| 84.0 | 563 | 2.5 | 17.27 | B103 | TBS132S4 | 20145 | 5756 |
| 83.9 | 544 | 3.9 | 34.68 | B123 | TBS112MB2 | 28392 | 8112 |
| 83.9 | 544 | 3.9 | 34.68 | B123 | TBS132SA2 | 28392 | 8112 |
| 83.7 | 570 | 1.4 | 11.59 | B083 | TH/TBH132MB6 | 15695 | 4484 |
| 83.7 | 570 | 1.4 | 11.59 | B083 | TP/TBP132MB6 | 15695 | 4484 |
| 82.9 | 576 | 1.4 | 11.59 | B083 | TBS132MB6 | 15733 | 4495 |
| 82.2 | 555 | 2.3 | 35.87 | B103 | TP/TBP132S2 | 20318 | 5805 |
| 82.0 | 557 | 2.3 | 35.87 | B103 | TH/TBH132SA2 | 20337 | 5811 |
| 81.1 | 562 | 2.3 | 35.87 | B103 | TBS112MB2 | 20395 | 5827 |
| 81.1 | 562 | 2.3 | 35.87 | B103 | TBS132SA2 | 20395 | 5827 |
| 80.5 | 593 | 1.8 | 12.05 | B103 | TH/TBH132MB6 | 20363 | 5818 |
| 80.5 | 593 | 1.8 | 12.05 | B103 | TP/TBP132MB6 | 20363 | 5818 |
| 80.2 | 589 | 1.4 | 18.32 | B083 | TP/TBP132MS4 | 15874 | 4535 |
| 79.7 | 593 | 1.4 | 18.32 | B083 | TH/TBH132S4 | 15898 | 4542 |
| 79.7 | 599 | 1.8 | 12.05 | B103 | TBS132MB6 | 20421 | 5834 |
| 79.1 | 597 | 1.4 | 18.32 | B083 | TBS132S4 | 15923 | 4550 |
| 79.1 | 597 | 3.7 | 18.58 | B123 | TP/TBP132MS4 | 28748 | 8214 |
| 78.6 | 601 | 3.7 | 18.58 | B123 | TH/TBH132S4 | 28800 | 8229 |
| 78.1 | 606 | 3.6 | 18.58 | B123 | TBS132S4 | 28852 | 8244 |
| 77.7 | 614 | 3.4 | 12.48 | B123 | TH/TBH132MB6 | 28857 | 8245 |
| 77.7 | 614 | 3.4 | 12.48 | B123 | TP/TBP132MB6 | 28857 | 8245 |
| 77.1 | 613 | 2.3 | 19.06 | B103 | TP/TBP132MS4 | 20619 | 5891 |
| 76.9 | 621 | 3.4 | 12.48 | B123 | TBS132MB6 | 28936 | 8267 |
| 76.6 | 617 | 2.3 | 19.06 | B103 | TH/TBH132S4 | 20657 | 5902 |
| 76.1 | 621 | 2.3 | 19.06 | B103 | TBS132S4 | 20696 | 5913 |
| 74.5 | 612 | 1.0 | 39.60 | B083 | TP/TBP132S2 | 16232 | 4638 |
| 74.2 | 614 | 1.0 | 39.60 | B083 | TH/TBH132SA2 | 16244 | 4641 |
| 73.5 | 621 | 1.0 | 39.60 | B083 | TBS112MB2 | 16282 | 4652 |
| 73.5 | 621 | 1.0 | 39.60 | B083 | TBS132SA2 | 16282 | 4652 |
| 72.8 | 627 | 3.4 | 40.53 | B123 | TP/TBP132S2 | 29494 | 8427 |
| 72.5 | 629 | 3.3 | 40.53 | B123 | TH/TBH132SA2 | 29521 | 8434 |

# 5.1 B/BA MOTORIDUTTORE (50Hz)



## 5.50 kW

| n2 [rpm] | M2 [Nm] | fs | i | Riduttore | Motore | Fr2 D-S-P [N] | Fr2 C [N] |
|---|---|---|---|---|---|---|---|
| 71.8 | 635 | 3.3 | 40.53 | B123 | TBS112MB2 | 29601 | 8457 |
| 71.8 | 635 | 3.3 | 40.53 | B123 | TBS132SA2 | 29601 | 8457 |
| 71.7 | 636 | 2.0 | 41.12 | B103 | TP/TBP132S2 | 21095 | 6027 |
| 71.5 | 638 | 2.0 | 41.12 | B103 | TH/TBH132SA2 | 21115 | 6033 |
| 71.3 | 663 | 3.8 | 20.61 | B123 | TP/TBP132MS4 | 29545 | 8441 |
| 70.8 | 645 | 2.0 | 41.12 | B103 | TBS132SA2 | 21174 | 6050 |
| 70.8 | 645 | 2.0 | 41.12 | B103 | TBS112MB2 | 21174 | 6050 |
| 70.8 | 667 | 3.7 | 20.61 | B123 | TH/TBH132S4 | 29598 | 8456 |
| 70.4 | 672 | 3.7 | 20.61 | B123 | TBS132S4 | 29651 | 8472 |
| 70.1 | 681 | 3.2 | 13.84 | B123 | TH/TBH132MB6 | 29652 | 8472 |
| 70.1 | 681 | 3.2 | 13.84 | B123 | TP/TBP132MB6 | 29652 | 8472 |
| 69.3 | 689 | 3.2 | 13.84 | B123 | TBS132MB6 | 29732 | 8495 |
| 67.2 | 710 | 1.2 | 14.43 | B083 | TH/TBH132MB6 | 16481 | 4709 |
| 67.2 | 710 | 1.2 | 14.43 | B083 | TP/TBP132MB6 | 16481 | 4709 |
| 66.5 | 718 | 1.2 | 14.43 | B083 | TBS132MB6 | 16517 | 4719 |
| 66.1 | 690 | 1.8 | 44.61 | B103 | TP/TBP132S2 | 21564 | 6161 |
| 65.9 | 692 | 1.8 | 44.61 | B103 | TH/TBH132SA2 | 21584 | 6167 |
| 65.7 | 694 | 3.2 | 44.89 | B123 | TP/TBP132S2 | 30000 | 8656 |
| 65.5 | 697 | 3.2 | 44.89 | B123 | TH/TBH132SA2 | 30000 | 8663 |
| 65.2 | 699 | 1.8 | 44.61 | B103 | TBS112MB2 | 21643 | 6184 |
| 65.2 | 699 | 1.8 | 44.61 | B103 | TBS132SA2 | 21643 | 6184 |
| 64.8 | 704 | 3.2 | 44.89 | B123 | TBS112MB2 | 30000 | 8686 |
| 64.8 | 704 | 3.2 | 44.89 | B123 | TBS132SA2 | 30000 | 8686 |
| 64.7 | 738 | 1.7 | 14.99 | B103 | TH/TBH132MB6 | 21594 | 6170 |
| 64.7 | 738 | 1.7 | 14.99 | B103 | TP/TBP132MB6 | 21594 | 6170 |
| 64.5 | 733 | 3.8 | 22.78 | B123 | TP/TBP132MS4 | 30000 | 8663 |
| 64.4 | 734 | 1.2 | 22.82 | B083 | TP/TBP132MS4 | 16659 | 4760 |
| 64.1 | 745 | 1.7 | 14.99 | B103 | TBS132MB6 | 21653 | 6187 |
| 64.1 | 738 | 3.8 | 22.78 | B123 | TH/TBH132S4 | 30000 | 8678 |
| 64.0 | 739 | 1.2 | 22.82 | B083 | TH/TBH132S4 | 16683 | 4767 |
| 63.7 | 743 | 3.8 | 22.78 | B123 | TBS132S4 | 30000 | 8693 |
| 63.5 | 744 | 1.1 | 22.82 | B083 | TBS132S4 | 16707 | 4774 |
| 63.1 | 757 | 2.9 | 15.38 | B123 | TH/TBH132MB6 | 30000 | 8704 |
| 63.1 | 757 | 2.9 | 15.38 | B123 | TP/TBP132MB6 | 30000 | 8704 |
| 62.4 | 731 | 1.7 | 47.28 | B103 | TP/TBP132S2 | 21902 | 6258 |
| 62.4 | 765 | 2.9 | 15.38 | B123 | TBS132MB6 | 30000 | 8727 |
| 62.2 | 734 | 1.7 | 47.28 | B103 | TH/TBH132SA2 | 21922 | 6263 |
| 62.0 | 762 | 1.8 | 23.70 | B103 | TP/TBP132MS4 | 21859 | 6245 |
| 61.6 | 767 | 1.8 | 23.70 | B103 | TH/TBH132S4 | 21898 | 6257 |
| 61.5 | 741 | 1.7 | 47.28 | B103 | TBS112MB2 | 21982 | 6280 |
| 61.5 | 741 | 1.7 | 47.28 | B103 | TBS132SA2 | 21982 | 6280 |

# 5.1 B/BA MOTORIDUTTORE (50Hz)



## 5.50 kW

| n2 [rpm] | M2 [Nm] | fs | i | Riduttore | Motore | Fr2 D-S-P [N] | Fr2 C [N] |
|---|---|---|---|---|---|---|---|
| 61.2 | 773 | 1.8 | 23.70 | B103 | TBS132S4 | 21938 | 6268 |
| 59.2 | 770 | 3.1 | 49.80 | B123 | TP/TBP132S2 | 30000 | 8889 |
| 59.0 | 773 | 3.1 | 49.80 | B123 | TH/TBH132SA2 | 30000 | 8897 |
| 58.7 | 777 | 1.6 | 50.24 | B103 | TP/TBP132S2 | 22000 | 6359 |
| 58.5 | 817 | 1.1 | 16.60 | B083 | TH/TBH132MB6 | 16964 | 4847 |
| 58.5 | 817 | 1.1 | 16.60 | B083 | TP/TBP132MB6 | 16964 | 4847 |
| 58.5 | 780 | 1.6 | 50.24 | B103 | TH/TBH132SA2 | 22000 | 6365 |
| 58.4 | 781 | 3.1 | 49.80 | B123 | TBS112MB2 | 30000 | 8920 |
| 58.4 | 781 | 3.1 | 49.80 | B123 | TBS132SA2 | 30000 | 8920 |
| 57.9 | 788 | 1.6 | 50.24 | B103 | TBS112MB2 | 22000 | 6382 |
| 57.9 | 788 | 1.6 | 50.24 | B103 | TBS132SA2 | 22000 | 6382 |
| 57.8 | 825 | 1.1 | 16.60 | B083 | TBS132MB6 | 16999 | 4857 |
| 56.8 | 833 | 3.4 | 25.89 | B123 | TP/TBP132MS4 | 30000 | 8946 |
| 56.4 | 838 | 3.3 | 25.89 | B123 | TH/TBH132S4 | 30000 | 8962 |
| 56.3 | 848 | 4.0 | 17.04 | B143 | TBS132MB6 | 30302 | 30302 |
| 56.2 | 850 | 1.7 | 17.27 | B103 | TH/TBH132MB6 | 22000 | 6402 |
| 56.2 | 850 | 1.7 | 17.27 | B103 | TP/TBP132MB6 | 22000 | 6402 |
| 56.0 | 844 | 3.3 | 25.89 | B123 | TBS132S4 | 30000 | 8977 |
| 55.6 | 859 | 1.7 | 17.27 | B103 | TBS132MB6 | 22000 | 6419 |
| 55.6 | 820 | 1.6 | 53.02 | B103 | TP/TBP132S2 | 22000 | 6449 |
| 55.4 | 823 | 1.5 | 53.02 | B103 | TH/TBH132SA2 | 22000 | 6455 |
| 55.4 | 853 | 1.8 | 26.51 | B103 | TP/TBP132MS4 | 22000 | 6430 |
| 55.1 | 858 | 1.7 | 26.51 | B103 | TH/TBH132S4 | 22000 | 6442 |
| 55.0 | 859 | 1.0 | 26.71 | B083 | TP/TBP132MS4 | 17201 | 4914 |
| 54.9 | 831 | 1.5 | 53.02 | B103 | TBS112MB2 | 22000 | 6472 |
| 54.9 | 831 | 1.5 | 53.02 | B103 | TBS132SA2 | 22000 | 6472 |
| 54.7 | 865 | 1.0 | 26.71 | B083 | TH/TBH132S4 | 17223 | 4921 |
| 54.7 | 864 | 1.7 | 26.51 | B103 | TBS132S4 | 22000 | 6453 |
| 54.3 | 871 | 1.0 | 26.71 | B083 | TBS132S4 | 17246 | 4928 |
| 54.3 | 840 | 2.9 | 54.30 | B123 | TP/TBP132S2 | 30000 | 9084 |
| 54.1 | 843 | 2.8 | 54.30 | B123 | TH/TBH132SA2 | 30000 | 9092 |
| 53.6 | 851 | 2.8 | 54.30 | B123 | TBS112MB2 | 30000 | 9115 |
| 53.6 | 851 | 2.8 | 54.30 | B123 | TBS132SA2 | 30000 | 9115 |
| 53.4 | 885 | 3.2 | 27.51 | B123 | TP/TBP132MS4 | 30000 | 9081 |
| 53.1 | 891 | 3.1 | 27.51 | B123 | TH/TBH132S4 | 30000 | 9096 |
| 52.9 | 902 | 1.0 | 18.32 | B083 | TH/TBH132MB6 | 17293 | 4941 |
| 52.9 | 902 | 1.0 | 18.32 | B083 | TP/TBP132MB6 | 17293 | 4941 |
| 52.7 | 897 | 3.1 | 27.51 | B123 | TBS132S4 | 30000 | 9112 |
| 52.4 | 911 | 1.0 | 18.32 | B083 | TBS132MB6 | 17327 | 4951 |
| 52.2 | 914 | 2.5 | 18.58 | B123 | TH/TBH132MB6 | 30000 | 9120 |
| 52.2 | 914 | 2.5 | 18.58 | B123 | TP/TBP132MB6 | 30000 | 9120 |

# 5.1 B/BA MOTORIDUTTORE (50Hz)



## 5.50 kW

| n2 [rpm] | M2 [Nm] | fs | i | Riduttore | Motore | Fr2 D-S-P [N] | Fr2 C [N] |
|---|---|---|---|---|---|---|---|
| 51.7 | 924 | 2.5 | 18.58 | B123 | TBS132MB6 | 30000 | 9143 |
| 50.9 | 938 | 1.6 | 19.06 | B103 | TH/TBH132MB6 | 22000 | 6564 |
| 50.9 | 938 | 1.6 | 19.06 | B103 | TP/TBP132MB6 | 22000 | 6564 |
| 50.4 | 948 | 1.6 | 19.06 | B103 | TBS132MB6 | 22000 | 6581 |
| 50.4 | 905 | 1.4 | 58.50 | B103 | TP/TBP132S2 | 22000 | 6614 |
| 50.3 | 908 | 1.4 | 58.50 | B103 | TH/TBH132SA2 | 22000 | 6620 |
| 49.7 | 917 | 1.4 | 58.50 | B103 | TBS112MB2 | 22000 | 6637 |
| 49.7 | 917 | 1.4 | 58.50 | B103 | TBS132SA2 | 22000 | 6637 |
| 49.7 | 918 | 2.6 | 59.36 | B123 | TP/TBP132S2 | 30000 | 9286 |
| 49.5 | 921 | 2.6 | 59.36 | B123 | TH/TBH132SA2 | 30000 | 9293 |
| 49.0 | 930 | 2.6 | 59.36 | B123 | TBS112MB2 | 30000 | 9316 |
| 49.0 | 930 | 2.6 | 59.36 | B123 | TBS132SA2 | 30000 | 9316 |
| 48.1 | 983 | 1.6 | 30.55 | B103 | TP/TBP132MS4 | 22000 | 6665 |
| 47.8 | 989 | 1.6 | 30.55 | B103 | TH/TBH132S4 | 22000 | 6677 |
| 47.7 | 990 | 2.8 | 30.79 | B123 | TP/TBP132MS4 | 30000 | 9331 |
| 47.5 | 996 | 1.6 | 30.55 | B103 | TBS132S4 | 22000 | 6688 |
| 47.4 | 997 | 2.8 | 30.79 | B123 | TH/TBH132S4 | 30000 | 9346 |
| 47.1 | 1014 | 2.6 | 20.61 | B123 | TH/TBH132MB6 | 30000 | 9349 |
| 47.1 | 1014 | 2.6 | 20.61 | B123 | TP/TBP132MB6 | 30000 | 9349 |
| 47.1 | 1004 | 2.8 | 30.79 | B123 | TBS132S4 | 30000 | 9361 |
| 47.1 | 968 | 2.6 | 62.59 | B123 | TP/TBP132S2 | 30000 | 9405 |
| 47.0 | 971 | 2.5 | 62.59 | B123 | TH/TBH132SA2 | 30000 | 9413 |
| 47.0 | 1005 | 2.8 | 31.26 | B123 | TP/TBP132MS4 | 30000 | 9364 |
| 46.7 | 1012 | 2.8 | 31.26 | B123 | TH/TBH132S4 | 30000 | 9379 |
| 46.6 | 1025 | 2.6 | 20.61 | B123 | TBS132MB6 | 30000 | 9372 |
| 46.5 | 981 | 2.5 | 62.59 | B123 | TBS112MB2 | 30000 | 9436 |
| 46.5 | 981 | 2.5 | 62.59 | B123 | TBS132SA2 | 30000 | 9436 |
| 46.4 | 1019 | 2.7 | 31.26 | B123 | TBS132S4 | 30000 | 9395 |
| 45.5 | 1003 | 1.3 | 64.89 | B103 | TP/TBP132S2 | 22000 | 6789 |
| 45.5 | 1003 | 3.7 | 64.88 | B143 | TP/TBP132S2 | 32224 | 32224 |
| 45.3 | 1007 | 1.3 | 64.89 | B103 | TH/TBH132SA2 | 22000 | 6795 |
| 45.3 | 1007 | 3.7 | 64.88 | B143 | TH/TBH132SA2 | 32253 | 32253 |
| 44.9 | 1017 | 3.7 | 64.88 | B143 | TBS112MB2 | 32340 | 32340 |
| 44.9 | 1017 | 3.7 | 64.88 | B143 | TBS132SA2 | 32340 | 32340 |
| 44.8 | 1017 | 1.3 | 64.89 | B103 | TBS112MB2 | 22000 | 6812 |
| 44.8 | 1017 | 1.3 | 64.89 | B103 | TBS132SA2 | 22000 | 6812 |
| 44.5 | 1063 | 1.6 | 33.07 | B103 | TP/TBP132MS4 | 22000 | 6796 |
| 44.2 | 1071 | 1.6 | 33.07 | B103 | TH/TBH132S4 | 22000 | 6808 |
| 43.9 | 1078 | 1.6 | 33.07 | B103 | TBS132S4 | 22000 | 6819 |
| 43.0 | 1060 | 1.2 | 68.58 | B103 | TP/TBP132S2 | 22000 | 6882 |
| 42.9 | 1064 | 1.2 | 68.58 | B103 | TH/TBH132SA2 | 22000 | 6888 |

# 5.1 B/BA MOTORIDUTTORE (50Hz)



## 5.50 kW

| n2 [rpm] | M2 [Nm] | fs | i | Riduttore | Motore | Fr2 D-S-P [N] | Fr2 C [N] |
|---|---|---|---|---|---|---|---|
| 42.6 | 1121 | 2.6 | 22.78 | B123 | TH/TBH132MB6 | 30000 | 9568 |
| 42.6 | 1121 | 2.6 | 22.78 | B123 | TP/TBP132MB6 | 30000 | 9568 |
| 42.5 | 1074 | 2.3 | 69.43 | B123 | TP/TBP132S2 | 30000 | 9638 |
| 42.4 | 1075 | 1.2 | 68.58 | B103 | TBS112MB2 | 22000 | 6905 |
| 42.4 | 1075 | 1.2 | 68.58 | B103 | TBS132SA2 | 22000 | 6905 |
| 42.4 | 1115 | 2.5 | 34.68 | B123 | TP/TBP132MS4 | 30000 | 9592 |
| 42.3 | 1077 | 2.3 | 69.43 | B123 | TH/TBH132SA2 | 30000 | 9646 |
| 42.1 | 1133 | 2.6 | 22.78 | B123 | TBS132MB6 | 30000 | 9590 |
| 42.1 | 1123 | 2.5 | 34.68 | B123 | TH/TBH132S4 | 30000 | 9607 |
| 41.9 | 1088 | 2.3 | 69.43 | B123 | TBS112MB2 | 30000 | 9669 |
| 41.9 | 1088 | 2.3 | 69.43 | B123 | TBS132SA2 | 30000 | 9669 |
| 41.9 | 1089 | 3.4 | 70.43 | B143 | TP/TBP132S2 | 32923 | 32923 |
| 41.8 | 1131 | 2.5 | 34.68 | B123 | TBS132S4 | 30000 | 9622 |
| 41.7 | 1093 | 3.4 | 70.43 | B143 | TH/TBH132SA2 | 32952 | 32952 |
| 41.3 | 1104 | 3.4 | 70.43 | B143 | TBS112MB2 | 33040 | 33040 |
| 41.3 | 1104 | 3.4 | 70.43 | B143 | TBS132SA2 | 33040 | 33040 |
| 41.0 | 1153 | 1.5 | 35.87 | B103 | TP/TBP132MS4 | 22000 | 6931 |
| 40.9 | 1166 | 1.3 | 23.70 | B103 | TH/TBH132MB6 | 22000 | 6924 |
| 40.9 | 1166 | 1.3 | 23.70 | B103 | TP/TBP132MB6 | 22000 | 6924 |
| 40.7 | 1161 | 1.5 | 35.87 | B103 | TH/TBH132S4 | 22000 | 6942 |
| 40.5 | 1179 | 1.2 | 23.70 | B103 | TBS132MB6 | 22000 | 6941 |
| 40.5 | 1125 | 1.1 | 72.76 | B103 | TP/TBP132S2 | 22000 | 6982 |
| 40.4 | 1129 | 1.1 | 72.76 | B103 | TH/TBH132SA2 | 22000 | 6988 |
| 40.4 | 1169 | 1.5 | 35.87 | B103 | TBS132S4 | 22000 | 6954 |
| 40.0 | 1141 | 1.1 | 72.76 | B103 | TBS112MB2 | 22000 | 7005 |
| 40.0 | 1141 | 1.1 | 72.76 | B103 | TBS132SA2 | 22000 | 7005 |
| 39.6 | 1151 | 2.3 | 74.42 | B123 | TP/TBP132S2 | 30000 | 9793 |
| 39.5 | 1155 | 2.3 | 74.42 | B123 | TH/TBH132SA2 | 30000 | 9800 |
| 39.1 | 1167 | 2.3 | 74.42 | B123 | TBS112MB2 | 30000 | 9823 |
| 39.1 | 1167 | 2.3 | 74.42 | B123 | TBS132SA2 | 30000 | 9823 |
| 38.3 | 1193 | 3.1 | 77.12 | B143 | TP/TBP132S2 | 33699 | 33699 |
| 38.1 | 1197 | 3.1 | 77.12 | B143 | TH/TBH132SA2 | 33728 | 33728 |
| 37.8 | 1261 | 3.8 | 25.63 | B143 | TH/TBH132MB6 | 33610 | 33610 |
| 37.8 | 1261 | 3.8 | 25.63 | B143 | TP/TBP132MB6 | 33610 | 33610 |
| 37.7 | 1209 | 3.1 | 77.12 | B143 | TBS112MB2 | 33816 | 33816 |
| 37.7 | 1209 | 3.1 | 77.12 | B143 | TBS132SA2 | 33816 | 33816 |
| 37.5 | 1274 | 2.3 | 25.89 | B123 | TH/TBH132MB6 | 30000 | 9843 |
| 37.5 | 1274 | 2.3 | 25.89 | B123 | TP/TBP132MB6 | 30000 | 9843 |
| 37.5 | 1275 | 3.8 | 25.63 | B143 | TBS132MB6 | 33697 | 33697 |
| 37.4 | 1220 | 1.0 | 78.92 | B103 | TP/TBP132S2 | 22000 | 7119 |
| 37.3 | 1225 | 1.0 | 78.92 | B103 | TH/TBH132SA2 | 22000 | 7125 |

# 5.1 B/BA MOTORIDUTTORE (50Hz)



## 5.50 kW

| n2 [rpm] | M2 [Nm] | fs | i | Riduttore | Motore | Fr2 D-S-P [N] | Fr2 C [N] |
|---|---|---|---|---|---|---|---|
| 37.1 | 1288 | 2.3 | 25.89 | B123 | TBS132MB6 | 30000 | 9865 |
| 36.9 | 1237 | 1.0 | 78.92 | B103 | TBS112MB2 | 22000 | 7142 |
| 36.9 | 1237 | 1.0 | 78.92 | B103 | TBS132SA2 | 22000 | 7142 |
| 36.9 | 1238 | 2.1 | 80.04 | B123 | TP/TBP132S2 | 30000 | 9953 |
| 36.7 | 1242 | 2.1 | 80.04 | B123 | TH/TBH132SA2 | 30000 | 9961 |
| 36.6 | 1305 | 1.2 | 26.51 | B103 | TH/TBH132MB6 | 22000 | 7107 |
| 36.6 | 1305 | 1.2 | 26.51 | B103 | TP/TBP132MB6 | 22000 | 7107 |
| 36.5 | 1296 | 3.7 | 40.29 | B143 | TP/TBP132MS4 | 33960 | 33960 |
| 36.4 | 1255 | 2.1 | 80.04 | B123 | TBS112MB2 | 30000 | 9983 |
| 36.4 | 1255 | 2.1 | 80.04 | B123 | TBS132SA2 | 30000 | 9983 |
| 36.3 | 1303 | 2.1 | 40.53 | B123 | TP/TBP132MS4 | 30000 | 9929 |
| 36.2 | 1319 | 1.2 | 26.51 | B103 | TBS132MB6 | 22000 | 7124 |
| 36.2 | 1305 | 3.7 | 40.29 | B143 | TH/TBH132S4 | 34018 | 34018 |
| 36.0 | 1312 | 2.1 | 40.53 | B123 | TH/TBH132S4 | 30000 | 9943 |
| 36.0 | 1314 | 3.7 | 40.29 | B143 | TBS132S4 | 34076 | 34076 |
| 35.8 | 1321 | 2.1 | 40.53 | B123 | TBS132S4 | 30000 | 9958 |
| 35.7 | 1322 | 1.3 | 41.12 | B103 | TP/TBP132MS4 | 22000 | 7156 |
| 35.5 | 1332 | 1.3 | 41.12 | B103 | TH/TBH132S4 | 22000 | 7167 |
| 35.3 | 1341 | 1.3 | 41.12 | B103 | TBS132S4 | 22000 | 7178 |
| 35.3 | 1294 | 1.0 | 83.66 | B103 | TP/TBP132S2 | 22000 | 7217 |
| 35.3 | 1354 | 2.2 | 27.51 | B123 | TH/TBH132MB6 | 30000 | 9971 |
| 35.3 | 1354 | 2.2 | 27.51 | B123 | TP/TBP132MB6 | 30000 | 9971 |
| 35.3 | 1351 | 3.6 | 27.44 | B143 | TH/TBH132MB6 | 34185 | 34185 |
| 35.3 | 1351 | 3.6 | 27.44 | B143 | TP/TBP132MB6 | 34185 | 34185 |
| 35.1 | 1298 | 1.0 | 83.66 | B103 | TH/TBH132SA2 | 22000 | 7222 |
| 35.0 | 1365 | 3.5 | 27.44 | B143 | TBS132MB6 | 34272 | 34272 |
| 34.9 | 1368 | 2.1 | 27.51 | B123 | TBS132MB6 | 30000 | 9993 |
| 34.8 | 1311 | 1.0 | 83.66 | B103 | TBS112MB2 | 22000 | 7239 |
| 34.8 | 1311 | 1.0 | 83.66 | B103 | TBS132SA2 | 22000 | 7239 |
| 34.5 | 1323 | 2.8 | 85.54 | B143 | TP/TBP132S2 | 34589 | 34589 |
| 34.4 | 1327 | 2.8 | 85.54 | B143 | TH/TBH132SA2 | 34618 | 34618 |
| 34.0 | 1341 | 2.8 | 85.54 | B143 | TBS112MB2 | 34706 | 34706 |
| 34.0 | 1341 | 2.8 | 85.54 | B143 | TBS132SA2 | 34706 | 34706 |
| 33.3 | 1420 | 3.4 | 44.16 | B143 | TP/TBP132MS4 | 34734 | 34734 |
| 33.1 | 1430 | 3.4 | 44.16 | B143 | TH/TBH132S4 | 34791 | 34791 |
| 33.0 | 1435 | 1.2 | 44.61 | B103 | TP/TBP132MS4 | 22000 | 7288 |
| 32.8 | 1390 | 1.9 | 89.87 | B123 | TP/TBP132S2 | 30000 | 10205 |
| 32.8 | 1440 | 3.3 | 44.16 | B143 | TBS132S4 | 34849 | 34849 |
| 32.7 | 1444 | 1.2 | 44.61 | B103 | TH/TBH132S4 | 22000 | 7299 |
| 32.7 | 1394 | 1.9 | 89.87 | B123 | TH/TBH132SA2 | 30000 | 10212 |
| 32.7 | 1444 | 2.1 | 44.89 | B123 | TP/TBP132MS4 | 30000 | 10144 |

# 5.1 B/BA MOTORIDUTTORE (50Hz)



## 5.50 kW

| n2 [rpm] | M2 [Nm] | fs | i | Riduttore | Motore | Fr2 D-S-P [N] | Fr2 C [N] |
|---|---|---|---|---|---|---|---|
| 32.5 | 1454 | 1.2 | 44.61 | B103 | TBS132S4 | 22000 | 7310 |
| 32.5 | 1454 | 2.1 | 44.89 | B123 | TH/TBH132S4 | 30000 | 10158 |
| 32.4 | 1409 | 1.9 | 89.87 | B123 | TBS112MB2 | 30000 | 10234 |
| 32.4 | 1409 | 1.9 | 89.87 | B123 | TBS132SA2 | 30000 | 10234 |
| 32.3 | 1464 | 2.0 | 44.89 | B123 | TBS132S4 | 30000 | 10172 |
| 32.3 | 1479 | 3.3 | 30.05 | B143 | TH/TBH132MB6 | 34945 | 34945 |
| 32.3 | 1479 | 3.3 | 30.05 | B143 | TP/TBP132MB6 | 34945 | 34945 |
| 32.0 | 1494 | 3.3 | 30.05 | B143 | TBS132MB6 | 35031 | 35031 |
| 31.7 | 1504 | 1.1 | 30.55 | B103 | TH/TBH132MB6 | 22000 | 7336 |
| 31.7 | 1504 | 1.1 | 30.55 | B103 | TP/TBP132MB6 | 22000 | 7336 |
| 31.5 | 1516 | 1.9 | 30.79 | B123 | TH/TBH132MB6 | 30000 | 10204 |
| 31.5 | 1516 | 1.9 | 30.79 | B123 | TP/TBP132MB6 | 30000 | 10204 |
| 31.4 | 1520 | 1.1 | 30.55 | B103 | TBS132MB6 | 22000 | 7352 |
| 31.3 | 1456 | 2.6 | 94.13 | B143 | TP/TBP132S2 | 35409 | 35409 |
| 31.2 | 1531 | 1.9 | 30.79 | B123 | TBS132MB6 | 30000 | 10225 |
| 31.2 | 1460 | 2.6 | 94.13 | B143 | TH/TBH132SA2 | 35438 | 35438 |
| 31.1 | 1521 | 1.1 | 47.28 | B103 | TP/TBP132MS4 | 22000 | 7382 |
| 31.0 | 1539 | 1.9 | 31.26 | B123 | TH/TBH132MB6 | 30000 | 10235 |
| 31.0 | 1539 | 1.9 | 31.26 | B123 | TP/TBP132MB6 | 30000 | 10235 |
| 30.9 | 1531 | 1.1 | 47.28 | B103 | TH/TBH132S4 | 22000 | 7393 |
| 30.9 | 1476 | 2.5 | 94.13 | B143 | TBS112MB2 | 35526 | 35526 |
| 30.9 | 1476 | 2.5 | 94.13 | B143 | TBS132SA2 | 35526 | 35526 |
| 30.7 | 1542 | 1.1 | 47.28 | B103 | TBS132S4 | 22000 | 7404 |
| 30.7 | 1555 | 1.9 | 31.26 | B123 | TBS132MB6 | 30000 | 10256 |
| 30.4 | 1555 | 3.2 | 48.35 | B143 | TP/TBP132MS4 | 35496 | 35496 |
| 30.2 | 1566 | 3.2 | 48.35 | B143 | TH/TBH132S4 | 35553 | 35553 |
| 30.0 | 1576 | 3.2 | 48.35 | B143 | TBS132S4 | 35611 | 35611 |
| 29.6 | 1542 | 1.7 | 99.70 | B123 | TP/TBP132S2 | 30000 | 10424 |
| 29.5 | 1547 | 1.7 | 99.70 | B123 | TH/TBH132SA2 | 30000 | 10431 |
| 29.5 | 1602 | 2.0 | 49.80 | B123 | TP/TBP132MS4 | 30000 | 10356 |
| 29.4 | 1625 | 3.0 | 33.01 | B143 | TH/TBH132MB6 | 35730 | 35730 |
| 29.4 | 1625 | 3.0 | 33.01 | B143 | TP/TBP132MB6 | 35730 | 35730 |
| 29.3 | 1616 | 1.1 | 50.24 | B103 | TP/TBP132MS4 | 22000 | 7478 |
| 29.3 | 1628 | 1.1 | 33.07 | B103 | TH/TBH132MB6 | 22000 | 7461 |
| 29.3 | 1628 | 1.1 | 33.07 | B103 | TP/TBP132MB6 | 22000 | 7461 |
| 29.3 | 1613 | 2.0 | 49.80 | B123 | TH/TBH132S4 | 30000 | 10370 |
| 29.2 | 1563 | 1.7 | 99.70 | B123 | TBS112MB2 | 30000 | 10453 |
| 29.2 | 1563 | 1.7 | 99.70 | B123 | TBS132SA2 | 30000 | 10453 |
| 29.1 | 1627 | 1.0 | 50.24 | B103 | TH/TBH132S4 | 22000 | 7489 |
| 29.1 | 1624 | 2.0 | 49.80 | B123 | TBS132S4 | 30000 | 10383 |
| 29.1 | 1642 | 3.0 | 33.01 | B143 | TBS132MB6 | 35816 | 35816 |

# 5.1 B/BA MOTORIDUTTORE (50Hz)



## 5.50 kW

| n2 [rpm] | M2 [Nm] | fs | i | Riduttore | Motore | Fr2 D-S-P [N] | Fr2 C [N] |
|---|---|---|---|---|---|---|---|
| 29.0 | 1645 | 1.1 | 33.07 | B103 | TBS132MB6 | 22000 | 7477 |
| 28.9 | 1638 | 1.0 | 50.24 | B103 | TBS132S4 | 22000 | 7500 |
| 28.6 | 1595 | 3.8 | 103.12 | B153 | TP/TBP132S2 | 62916 | 62916 |
| 28.5 | 1600 | 3.8 | 103.12 | B153 | TH/TBH132SA2 | 62981 | 62981 |
| 28.2 | 1616 | 3.7 | 103.12 | B153 | TBS132SA2 | 63179 | 63179 |
| 28.0 | 1707 | 1.7 | 34.68 | B123 | TH/TBH132MB6 | 30000 | 10441 |
| 28.0 | 1707 | 1.7 | 34.68 | B123 | TP/TBP132MB6 | 30000 | 10441 |
| 27.9 | 1637 | 2.3 | 105.83 | B143 | TP/TBP132S2 | 36411 | 36411 |
| 27.8 | 1642 | 2.3 | 105.83 | B143 | TH/TBH132SA2 | 36440 | 36440 |
| 27.7 | 1705 | 1.0 | 53.02 | B103 | TP/TBP132MS4 | 22000 | 7562 |
| 27.7 | 1649 | 1.6 | 106.65 | B123 | TP/TBP132S2 | 30000 | 10563 |
| 27.7 | 1725 | 1.7 | 34.68 | B123 | TBS132MB6 | 30000 | 10461 |
| 27.7 | 1709 | 2.9 | 53.16 | B143 | TP/TBP132MS4 | 36288 | 36288 |
| 27.6 | 1655 | 1.6 | 106.65 | B123 | TH/TBH132SA2 | 30000 | 10570 |
| 27.5 | 1717 | 1.0 | 53.02 | B103 | TH/TBH132S4 | 22000 | 7573 |
| 27.5 | 1659 | 2.3 | 105.83 | B143 | TBS112MB2 | 36528 | 36528 |
| 27.5 | 1659 | 2.3 | 105.83 | B143 | TBS132SA2 | 36528 | 36528 |
| 27.5 | 1721 | 2.9 | 53.16 | B143 | TH/TBH132S4 | 36345 | 36345 |
| 27.3 | 1729 | 1.0 | 53.02 | B103 | TBS132S4 | 22000 | 7584 |
| 27.3 | 1672 | 1.6 | 106.65 | B123 | TBS112MB2 | 30000 | 10591 |
| 27.3 | 1672 | 1.6 | 106.65 | B123 | TBS132SA2 | 30000 | 10591 |
| 27.3 | 1733 | 2.9 | 53.16 | B143 | TBS132S4 | 36402 | 36402 |
| 27.1 | 1746 | 1.8 | 54.30 | B123 | TP/TBP132MS4 | 30000 | 10527 |
| 27.0 | 1766 | 1.0 | 35.87 | B103 | TH/TBH132MB6 | 22000 | 7587 |
| 27.0 | 1766 | 1.0 | 35.87 | B103 | TP/TBP132MB6 | 22000 | 7587 |
| 26.9 | 1758 | 1.8 | 54.30 | B123 | TH/TBH132S4 | 30000 | 10540 |
| 26.9 | 1757 | 2.8 | 54.63 | B143 | TP/TBP132MS4 | 36515 | 36515 |
| 26.8 | 1784 | 1.0 | 35.87 | B103 | TBS132MB6 | 22000 | 7603 |
| 26.7 | 1770 | 1.8 | 54.30 | B123 | TBS132S4 | 30000 | 10553 |
| 26.7 | 1769 | 2.8 | 54.63 | B143 | TH/TBH132S4 | 36571 | 36571 |
| 26.5 | 1805 | 2.8 | 36.67 | B143 | TH/TBH132MB6 | 36601 | 36601 |
| 26.5 | 1805 | 2.8 | 36.67 | B143 | TP/TBP132MB6 | 36601 | 36601 |
| 26.5 | 1781 | 2.8 | 54.63 | B143 | TBS132S4 | 36628 | 36628 |
| 26.4 | 1731 | 2.2 | 111.94 | B143 | TP/TBP132S2 | 36888 | 36888 |
| 26.3 | 1737 | 2.2 | 111.94 | B143 | TH/TBH132SA2 | 36917 | 36917 |
| 26.2 | 1824 | 2.8 | 36.67 | B143 | TBS132MB6 | 36686 | 36686 |
| 26.0 | 1755 | 2.1 | 111.94 | B143 | TBS112MB2 | 37004 | 37004 |
| 26.0 | 1755 | 2.1 | 111.94 | B143 | TBS132SA2 | 37004 | 37004 |
| 25.1 | 1881 | 0.9 | 58.50 | B103 | TP/TBP132MS4 | 22000 | 7713 |
| 24.9 | 1898 | 2.6 | 59.02 | B143 | TP/TBP132MS4 | 37153 | 37153 |
| 24.8 | 1909 | 1.7 | 59.36 | B123 | TP/TBP132MS4 | 30000 | 10695 |

# 5.1 B/BA MOTORIDUTTORE (50Hz)



## 5.50 kW

| n2 [rpm] | M2 [Nm] | fs | i | Riduttore | Motore | Fr2 D-S-P [N] | Fr2 C [N] |
|---|---|---|---|---|---|---|---|
| 24.7 | 1849 | 1.4 | 119.60 | B123 | TP/TBP132S2 | 30000 | 10791 |
| 24.7 | 1911 | 2.6 | 59.02 | B143 | TH/TBH132S4 | 37209 | 37209 |
| 24.6 | 1922 | 1.7 | 59.36 | B123 | TH/TBH132S4 | 30000 | 10708 |
| 24.6 | 1856 | 1.4 | 119.60 | B123 | TH/TBH132SA2 | 30000 | 10797 |
| 24.6 | 1924 | 2.6 | 59.02 | B143 | TBS132S4 | 37265 | 37265 |
| 24.4 | 1935 | 1.7 | 59.36 | B123 | TBS132S4 | 30000 | 10721 |
| 24.3 | 1875 | 1.4 | 119.60 | B123 | TBS112MB2 | 30000 | 10817 |
| 24.3 | 1875 | 1.4 | 119.60 | B123 | TBS132SA2 | 30000 | 10817 |
| 24.1 | 1983 | 2.5 | 40.29 | B143 | TH/TBH132MB6 | 37368 | 37368 |
| 24.1 | 1983 | 2.5 | 40.29 | B143 | TP/TBP132MB6 | 37368 | 37368 |
| 23.9 | 1995 | 1.5 | 40.53 | B123 | TH/TBH132MB6 | 30000 | 10732 |
| 23.9 | 1995 | 1.5 | 40.53 | B123 | TP/TBP132MB6 | 30000 | 10732 |
| 23.8 | 2004 | 2.5 | 40.29 | B143 | TBS132MB6 | 37452 | 37452 |
| 23.8 | 1916 | 3.1 | 123.88 | B153 | TP/TBP132S2 | 65000 | 65000 |
| 23.7 | 2016 | 1.5 | 40.53 | B123 | TBS132MB6 | 30000 | 10750 |
| 23.7 | 1927 | 1.9 | 124.62 | B143 | TP/TBP132S2 | 37791 | 37791 |
| 23.7 | 1922 | 3.1 | 123.88 | B153 | TH/TBH132SA2 | 65000 | 65000 |
| 23.6 | 1934 | 1.9 | 124.62 | B143 | TH/TBH132SA2 | 37819 | 37819 |
| 23.5 | 2013 | 1.6 | 62.59 | B123 | TP/TBP132MS4 | 30000 | 10792 |
| 23.5 | 1942 | 3.1 | 123.88 | B153 | TBS132SA2 | 65000 | 65000 |
| 23.4 | 1954 | 1.9 | 124.62 | B143 | TBS112MB2 | 37905 | 37905 |
| 23.4 | 1954 | 1.9 | 124.62 | B143 | TBS132SA2 | 37905 | 37905 |
| 23.3 | 2026 | 1.6 | 62.59 | B123 | TH/TBH132S4 | 30000 | 10804 |
| 23.2 | 2040 | 1.6 | 62.59 | B123 | TBS132S4 | 30000 | 10816 |
| 23.2 | 2041 | 3.9 | 63.47 | B153 | TP/TBP132MS4 | 65000 | 65000 |
| 23.0 | 2055 | 3.9 | 63.47 | B153 | TH/TBH132S4 | 65000 | 65000 |
| 22.8 | 2069 | 3.9 | 63.47 | B153 | TBS132S4 | 65000 | 65000 |
| 22.7 | 2010 | 1.3 | 129.96 | B123 | TP/TBP132S2 | 30000 | 10948 |
| 22.7 | 2086 | 2.4 | 64.88 | B143 | TP/TBP132MS4 | 37923 | 37923 |
| 22.7 | 2104 | 4.0 | 42.30 | B153 | TBS132MB6 | 65000 | 65000 |
| 22.6 | 2017 | 1.3 | 129.96 | B123 | TH/TBH132SA2 | 30000 | 10954 |
| 22.5 | 2101 | 2.4 | 64.88 | B143 | TH/TBH132S4 | 37978 | 37978 |
| 22.4 | 2037 | 1.3 | 129.96 | B123 | TBS112MB2 | 30000 | 10973 |
| 22.4 | 2037 | 1.3 | 129.96 | B123 | TBS132SA2 | 30000 | 10973 |
| 22.3 | 2115 | 2.4 | 64.88 | B143 | TBS132S4 | 38034 | 38034 |
| 22.0 | 2174 | 2.3 | 44.16 | B143 | TH/TBH132MB6 | 38103 | 38103 |
| 22.0 | 2174 | 2.3 | 44.16 | B143 | TP/TBP132MB6 | 38103 | 38103 |
| 22.0 | 2076 | 2.9 | 134.27 | B153 | TP/TBP132S2 | 65000 | 65000 |
| 21.9 | 2083 | 2.9 | 134.27 | B153 | TH/TBH132SA2 | 65000 | 65000 |
| 21.7 | 2196 | 2.3 | 44.16 | B143 | TBS132MB6 | 38186 | 38186 |
| 21.7 | 2105 | 2.9 | 134.27 | B153 | TBS132SA2 | 65000 | 65000 |

# 5.1 B/BA MOTORIDUTTORE (50Hz)



## 5.50 kW

| n2 [rpm] | M2 [Nm] | fs | i | Riduttore | Motore | Fr2 D-S-P [N] | Fr2 C [N] |
|---|---|---|---|---|---|---|---|
| 21.6 | 2210 | 1.4 | 44.89 | B123 | TH/TBH132MB6 | 30000 | 10908 |
| 21.6 | 2210 | 1.4 | 44.89 | B123 | TP/TBP132MB6 | 30000 | 10908 |
| 21.6 | 2110 | 1.8 | 136.44 | B143 | TP/TBP132S2 | 38542 | 38542 |
| 21.5 | 2117 | 1.8 | 136.44 | B143 | TH/TBH132SA2 | 38570 | 38570 |
| 21.4 | 2233 | 1.4 | 44.89 | B123 | TBS132MB6 | 30000 | 10925 |
| 21.3 | 2139 | 1.8 | 136.44 | B143 | TBS112MB2 | 38654 | 38654 |
| 21.3 | 2139 | 1.8 | 136.44 | B143 | TBS132SA2 | 38654 | 38654 |
| 21.2 | 2233 | 1.5 | 69.43 | B123 | TP/TBP132MS4 | 30000 | 10971 |
| 21.0 | 2248 | 1.5 | 69.43 | B123 | TH/TBH132S4 | 30000 | 10982 |
| 20.9 | 2264 | 1.5 | 69.43 | B123 | TBS132S4 | 30000 | 10993 |
| 20.9 | 2265 | 2.2 | 70.43 | B143 | TP/TBP132MS4 | 38578 | 38578 |
| 20.7 | 2281 | 2.2 | 70.43 | B143 | TH/TBH132S4 | 38632 | 38632 |
| 20.7 | 2288 | 3.5 | 71.15 | B153 | TP/TBP132MS4 | 65000 | 65000 |
| 20.6 | 2296 | 2.2 | 70.43 | B143 | TBS132S4 | 38686 | 38686 |
| 20.5 | 2304 | 3.5 | 71.15 | B153 | TH/TBH132S4 | 65000 | 65000 |
| 20.4 | 2241 | 1.2 | 144.43 | B123 | TH/TBH132SA2 | 30000 | 11142 |
| 20.4 | 2233 | 1.2 | 144.43 | B123 | TP/TBP132S2 | 30000 | 11136 |
| 20.4 | 2340 | 3.6 | 47.53 | B153 | TH/TBH132MB6 | 65000 | 65000 |
| 20.4 | 2340 | 3.6 | 47.53 | B153 | TP/TBP132MB6 | 65000 | 65000 |
| 20.4 | 2319 | 3.4 | 71.15 | B153 | TBS132S4 | 65000 | 65000 |
| 20.2 | 2364 | 3.6 | 47.53 | B153 | TBS132MB6 | 65000 | 65000 |
| 20.1 | 2264 | 1.2 | 144.43 | B123 | TBS112MB2 | 30000 | 11159 |
| 20.1 | 2264 | 1.2 | 144.43 | B123 | TBS132SA2 | 30000 | 11159 |
| 20.1 | 2380 | 2.2 | 48.35 | B143 | TH/TBH132MB6 | 38813 | 38813 |
| 20.1 | 2380 | 2.2 | 48.35 | B143 | TP/TBP132MB6 | 38813 | 38813 |
| 19.9 | 2405 | 2.2 | 48.35 | B143 | TBS132MB6 | 38893 | 38893 |
| 19.8 | 2393 | 1.5 | 74.42 | B123 | TP/TBP132MS4 | 30000 | 11082 |
| 19.8 | 2308 | 2.6 | 149.26 | B153 | TP/TBP132S2 | 65000 | 65000 |
| 19.7 | 2321 | 1.6 | 149.59 | B143 | TH/TBH132SA2 | 39316 | 39316 |
| 19.7 | 2313 | 1.6 | 149.59 | B143 | TP/TBP132S2 | 39289 | 39289 |
| 19.7 | 2316 | 2.6 | 149.26 | B153 | TH/TBH132SA2 | 65000 | 65000 |
| 19.6 | 2409 | 1.5 | 74.42 | B123 | TH/TBH132S4 | 30000 | 11093 |
| 19.5 | 2451 | 1.4 | 49.80 | B123 | TH/TBH132MB6 | 30000 | 11072 |
| 19.5 | 2451 | 1.4 | 49.80 | B123 | TP/TBP132MB6 | 30000 | 11072 |
| 19.5 | 2426 | 1.4 | 74.42 | B123 | TBS132S4 | 30000 | 11103 |
| 19.5 | 2345 | 1.6 | 149.59 | B143 | TBS112MB2 | 39398 | 39398 |
| 19.5 | 2345 | 1.6 | 149.59 | B143 | TBS132SA2 | 39398 | 39398 |
| 19.5 | 2340 | 2.6 | 149.26 | B153 | TBS132SA2 | 65000 | 65000 |
| 19.3 | 2477 | 1.4 | 49.80 | B123 | TBS132MB6 | 30000 | 11087 |
| 19.2 | 2489 | 3.4 | 50.56 | B153 | TH/TBH132MB6 | 65000 | 65000 |
| 19.2 | 2489 | 3.4 | 50.56 | B153 | TP/TBP132MB6 | 65000 | 65000 |

# 5.1 B/BA MOTORIDUTTORE (50Hz)



## 5.50 kW

| n2 [rpm] | M2 [Nm] | fs | i | Riduttore | Motore | Fr2 D-S-P [N] | Fr2 C [N] |
|---|---|---|---|---|---|---|---|
| 19.1 | 2480 | 2.0 | 77.12 | B143 | TP/TBP132MS4 | 39283 | 39283 |
| 19.0 | 2515 | 3.3 | 50.56 | B153 | TBS132MB6 | 65000 | 65000 |
| 19.0 | 2483 | 3.2 | 77.22 | B153 | TP/TBP132MS4 | 65000 | 65000 |
| 18.9 | 2497 | 2.0 | 77.12 | B143 | TH/TBH132S4 | 39336 | 39336 |
| 18.9 | 2500 | 3.2 | 77.22 | B153 | TH/TBH132S4 | 65000 | 65000 |
| 18.8 | 2514 | 2.0 | 77.12 | B143 | TBS132S4 | 39388 | 39388 |
| 18.8 | 2518 | 3.2 | 77.22 | B153 | TBS132S4 | 65000 | 65000 |
| 18.4 | 2478 | 1.1 | 160.23 | B123 | TP/TBP132S2 | 30000 | 11305 |
| 18.4 | 2574 | 1.4 | 80.04 | B123 | TP/TBP132MS4 | 30000 | 11191 |
| 18.3 | 2486 | 1.1 | 160.23 | B123 | TH/TBH132SA2 | 30000 | 11310 |
| 18.2 | 2512 | 1.0 | 160.23 | B123 | TBS112MB2 | 30000 | 11326 |
| 18.2 | 2512 | 1.0 | 160.23 | B123 | TBS132SA2 | 30000 | 11326 |
| 18.2 | 2592 | 1.4 | 80.04 | B123 | TH/TBH132S4 | 30000 | 11200 |
| 18.2 | 2617 | 2.0 | 53.16 | B143 | TH/TBH132MB6 | 39533 | 39533 |
| 18.2 | 2617 | 2.0 | 53.16 | B143 | TP/TBP132MB6 | 39533 | 39533 |
| 18.1 | 2609 | 1.3 | 80.04 | B123 | TBS132S4 | 30000 | 11210 |
| 18.1 | 2644 | 2.0 | 53.16 | B143 | TBS132MB6 | 39610 | 39610 |
| 17.9 | 2673 | 1.3 | 54.30 | B123 | TH/TBH132MB6 | 30000 | 11195 |
| 17.9 | 2673 | 1.3 | 54.30 | B123 | TP/TBP132MB6 | 30000 | 11195 |
| 17.8 | 2689 | 2.0 | 54.63 | B143 | TH/TBH132MB6 | 39735 | 39735 |
| 17.8 | 2689 | 2.0 | 54.63 | B143 | TP/TBP132MB6 | 39735 | 39735 |
| 17.8 | 2689 | 3.1 | 54.64 | B153 | TH/TBH132MB6 | 65000 | 65000 |
| 17.8 | 2689 | 3.1 | 54.64 | B153 | TP/TBP132MB6 | 65000 | 65000 |
| 17.8 | 2567 | 2.3 | 165.42 | B153 | TH/TBH132SA2 | 65000 | 65000 |
| 17.8 | 2558 | 2.3 | 165.42 | B153 | TP/TBP132S2 | 65000 | 65000 |
| 17.7 | 2701 | 1.2 | 54.30 | B123 | TBS132MB6 | 30000 | 11209 |
| 17.7 | 2584 | 1.5 | 166.53 | B143 | TH/TBH132SA2 | 40000 | 40000 |
| 17.7 | 2575 | 1.5 | 166.53 | B143 | TP/TBP132S2 | 40000 | 40000 |
| 17.6 | 2717 | 1.9 | 54.63 | B143 | TBS132MB6 | 39811 | 39811 |
| 17.6 | 2718 | 3.1 | 54.64 | B153 | TBS132MB6 | 65000 | 65000 |
| 17.6 | 2593 | 2.3 | 165.42 | B153 | TBS132SA2 | 65000 | 65000 |
| 17.5 | 2611 | 1.4 | 166.53 | B143 | TBS132SA2 | 40000 | 40000 |
| 17.5 | 2611 | 1.4 | 166.53 | B143 | TBS112MB2 | 40000 | 40000 |
| 17.5 | 2698 | 3.0 | 83.89 | B153 | TP/TBP132MS4 | 65000 | 65000 |
| 17.4 | 2716 | 2.9 | 83.89 | B153 | TH/TBH132S4 | 65000 | 65000 |
| 17.3 | 2735 | 2.9 | 83.89 | B153 | TBS132S4 | 65000 | 65000 |
| 17.2 | 2751 | 1.8 | 85.54 | B143 | TP/TBP132MS4 | 40000 | 40000 |
| 17.1 | 2770 | 1.8 | 85.54 | B143 | TH/TBH132S4 | 40000 | 40000 |
| 17.0 | 2789 | 1.8 | 85.54 | B143 | TBS132S4 | 40000 | 40000 |
| 16.9 | 2819 | 3.0 | 57.27 | B153 | TH/TBH132MB6 | 65000 | 65000 |
| 16.9 | 2819 | 3.0 | 57.27 | B153 | TP/TBP132MB6 | 65000 | 65000 |

# 5.1 B/BA MOTORIDUTTORE (50Hz)



## 5.50 kW

| n2 [rpm] | M2 [Nm] | fs | i | Riduttore | Motore | Fr2 D-S-P [N] | Fr2 C [N] |
|---|---|---|---|---|---|---|---|
| 16.8 | 2848 | 2.9 | 57.27 | B153 | TBS132MB6 | 65000 | 65000 |
| 16.8 | 2819 | 2.8 | 87.65 | B153 | TP/TBP132MS4 | 65000 | 65000 |
| 16.7 | 2838 | 2.8 | 87.65 | B153 | TH/TBH132S4 | 65000 | 65000 |
| 16.5 | 2858 | 2.8 | 87.65 | B153 | TBS132S4 | 65000 | 65000 |
| 16.4 | 2890 | 1.2 | 89.87 | B123 | TP/TBP132MS4 | 30000 | 11343 |
| 16.4 | 2905 | 1.8 | 59.02 | B143 | TH/TBH132MB6 | 40000 | 40000 |
| 16.4 | 2905 | 1.8 | 59.02 | B143 | TP/TBP132MB6 | 40000 | 40000 |
| 16.3 | 2922 | 1.2 | 59.36 | B123 | TH/TBH132MB6 | 30000 | 11306 |
| 16.3 | 2922 | 1.2 | 59.36 | B123 | TP/TBP132MB6 | 30000 | 11306 |
| 16.3 | 2935 | 1.8 | 59.02 | B143 | TBS132MB6 | 40000 | 40000 |
| 16.2 | 2952 | 1.1 | 59.36 | B123 | TBS132MB6 | 30000 | 11318 |
| 16.2 | 2910 | 1.2 | 89.87 | B123 | TH/TBH132S4 | 30000 | 11351 |
| 16.1 | 2930 | 1.2 | 89.87 | B123 | TBS132S4 | 30000 | 11360 |
| 15.9 | 2999 | 2.8 | 60.92 | B153 | TH/TBH132MB6 | 65000 | 65000 |
| 15.9 | 2999 | 2.8 | 60.92 | B153 | TP/TBP132MB6 | 65000 | 65000 |
| 15.8 | 2895 | 1.3 | 187.24 | B143 | TP/TBP132S2 | 40000 | 40000 |
| 15.8 | 3030 | 2.8 | 60.92 | B153 | TBS132MB6 | 65000 | 65000 |
| 15.8 | 2992 | 2.7 | 93.05 | B153 | TP/TBP132MS4 | 65000 | 65000 |
| 15.7 | 2905 | 1.3 | 187.24 | B143 | TH/TBH132SA2 | 40000 | 40000 |
| 15.7 | 3013 | 2.7 | 93.05 | B153 | TH/TBH132S4 | 65000 | 65000 |
| 15.6 | 3027 | 1.7 | 94.13 | B143 | TP/TBP132MS4 | 40000 | 40000 |
| 15.6 | 3033 | 2.6 | 93.05 | B153 | TBS132S4 | 65000 | 65000 |
| 15.5 | 3081 | 1.1 | 62.59 | B123 | TH/TBH132MB6 | 30000 | 11365 |
| 15.5 | 3081 | 1.1 | 62.59 | B123 | TP/TBP132MB6 | 30000 | 11365 |
| 15.5 | 3048 | 1.6 | 94.13 | B143 | TH/TBH132S4 | 40000 | 40000 |
| 15.5 | 2935 | 1.3 | 187.24 | B143 | TBS112MB2 | 40000 | 40000 |
| 15.5 | 2935 | 1.3 | 187.24 | B143 | TBS132SA2 | 40000 | 40000 |
| 15.4 | 3069 | 1.6 | 94.13 | B143 | TBS132S4 | 40000 | 40000 |
| 15.3 | 3113 | 1.1 | 62.59 | B123 | TBS132MB6 | 30000 | 11375 |
| 15.3 | 3124 | 2.7 | 63.47 | B153 | TH/TBH132MB6 | 65000 | 65000 |
| 15.3 | 3124 | 2.7 | 63.47 | B153 | TP/TBP132MB6 | 65000 | 65000 |
| 15.1 | 3157 | 2.7 | 63.47 | B153 | TBS132MB6 | 65000 | 65000 |
| 15.0 | 3194 | 1.6 | 64.88 | B143 | TH/TBH132MB6 | 40000 | 40000 |
| 15.0 | 3194 | 1.6 | 64.88 | B143 | TP/TBP132MB6 | 40000 | 40000 |
| 14.8 | 3227 | 1.6 | 64.88 | B143 | TBS132MB6 | 40000 | 40000 |
| 14.7 | 3206 | 1.1 | 99.70 | B123 | TP/TBP132MS4 | 30000 | 11456 |
| 14.6 | 3228 | 1.1 | 99.70 | B123 | TH/TBH132S4 | 30000 | 11462 |
| 14.5 | 3250 | 1.1 | 99.70 | B123 | TBS132S4 | 30000 | 11469 |
| 14.3 | 3316 | 2.4 | 103.12 | B153 | TP/TBP132MS4 | 65000 | 65000 |
| 14.2 | 3339 | 2.4 | 103.12 | B153 | TH/TBH132S4 | 65000 | 65000 |
| 14.1 | 3362 | 2.4 | 103.12 | B153 | TBS132S4 | 65000 | 65000 |

# 5.1 B/BA MOTORIDUTTORE (50Hz)



## 5.50 kW

| n2 [rpm] | M2 [Nm] | fs | i | Riduttore | Motore | Fr2 D-S-P [N] | Fr2 C [N] |
|---|---|---|---|---|---|---|---|
| 14.0 | 3418 | 1.0 | 69.43 | B123 | TH/TBH132MB6 | 30000 | 11459 |
| 14.0 | 3418 | 1.0 | 69.43 | B123 | TP/TBP132MB6 | 30000 | 11459 |
| 13.9 | 3403 | 1.5 | 105.83 | B143 | TP/TBP132MS4 | 40000 | 40000 |
| 13.8 | 3453 | 1.0 | 69.43 | B123 | TBS132MB6 | 30000 | 11467 |
| 13.8 | 3430 | 1.0 | 106.65 | B123 | TP/TBP132MS4 | 30000 | 11515 |
| 13.8 | 3427 | 1.5 | 105.83 | B143 | TH/TBH132S4 | 40000 | 40000 |
| 13.8 | 3467 | 1.5 | 70.43 | B143 | TH/TBH132MB6 | 40000 | 40000 |
| 13.8 | 3467 | 1.5 | 70.43 | B143 | TP/TBP132MB6 | 40000 | 40000 |
| 13.7 | 3453 | 1.0 | 106.65 | B123 | TH/TBH132S4 | 30000 | 11520 |
| 13.7 | 3450 | 1.4 | 105.83 | B143 | TBS132S4 | 40000 | 40000 |
| 13.6 | 3477 | 1.0 | 106.65 | B123 | TBS132S4 | 30000 | 11525 |
| 13.6 | 3503 | 1.5 | 70.43 | B143 | TBS132MB6 | 40000 | 40000 |
| 13.6 | 3502 | 2.4 | 71.15 | B153 | TH/TBH132MB6 | 65000 | 65000 |
| 13.6 | 3502 | 2.4 | 71.15 | B153 | TP/TBP132MB6 | 65000 | 65000 |
| 13.5 | 3538 | 2.4 | 71.15 | B153 | TBS132MB6 | 65000 | 65000 |
| 13.1 | 3600 | 1.4 | 111.94 | B143 | TP/TBP132MS4 | 40000 | 40000 |
| 13.0 | 3663 | 1.0 | 74.42 | B123 | TH/TBH132MB6 | 30000 | 11506 |
| 13.0 | 3663 | 1.0 | 74.42 | B123 | TP/TBP132MB6 | 30000 | 11506 |
| 13.0 | 3624 | 1.4 | 111.94 | B143 | TH/TBH132S4 | 40000 | 40000 |
| 13.0 | 3649 | 1.4 | 111.94 | B143 | TBS132S4 | 40000 | 40000 |
| 12.9 | 3701 | 1.0 | 74.42 | B123 | TBS132MB6 | 30000 | 11512 |
| 12.6 | 3796 | 1.4 | 77.12 | B143 | TH/TBH132MB6 | 40000 | 40000 |
| 12.6 | 3796 | 1.4 | 77.12 | B143 | TP/TBP132MB6 | 40000 | 40000 |
| 12.6 | 3801 | 2.2 | 77.22 | B153 | TH/TBH132MB6 | 65000 | 65000 |
| 12.6 | 3801 | 2.2 | 77.22 | B153 | TP/TBP132MB6 | 65000 | 65000 |
| 12.4 | 3835 | 1.4 | 77.12 | B143 | TBS132MB6 | 40000 | 40000 |
| 12.4 | 3841 | 2.2 | 77.22 | B153 | TBS132MB6 | 65000 | 65000 |
| 12.3 | 3846 | 0.9 | 119.60 | B123 | TP/TBP132MS4 | 30000 | 11585 |
| 12.2 | 3872 | 0.9 | 119.60 | B123 | TH/TBH132S4 | 30000 | 11588 |
| 12.1 | 3940 | 0.9 | 80.04 | B123 | TH/TBH132MB6 | 30000 | 11540 |
| 12.1 | 3940 | 0.9 | 80.04 | B123 | TP/TBP132MB6 | 30000 | 11540 |
| 12.0 | 3981 | 0.9 | 80.04 | B123 | TBS132MB6 | 30000 | 11543 |
| 11.9 | 3984 | 2.0 | 123.88 | B153 | TP/TBP132MS4 | 65000 | 65000 |
| 11.8 | 4007 | 1.2 | 124.62 | B143 | TP/TBP132MS4 | 40000 | 40000 |
| 11.8 | 4011 | 2.0 | 123.88 | B153 | TH/TBH132S4 | 65000 | 65000 |
| 11.7 | 4035 | 1.2 | 124.62 | B143 | TH/TBH132S4 | 40000 | 40000 |
| 11.7 | 4039 | 2.0 | 123.88 | B153 | TBS132S4 | 65000 | 65000 |
| 11.6 | 4063 | 1.2 | 124.62 | B143 | TBS132S4 | 40000 | 40000 |
| 11.6 | 4129 | 2.0 | 83.89 | B153 | TH/TBH132MB6 | 65000 | 65000 |
| 11.6 | 4129 | 2.0 | 83.89 | B153 | TP/TBP132MB6 | 65000 | 65000 |
| 11.4 | 4172 | 2.0 | 83.89 | B153 | TBS132MB6 | 65000 | 65000 |

# 5.1 B/BA MOTORIDUTTORE (50Hz)



## 5.50 kW

| n2 [rpm] | M2 [Nm] | fs | i | Riduttore | Motore | Fr2 D-S-P [N] | Fr2 C [N] |
|---|---|---|---|---|---|---|---|
| 11.3 | 4211 | 1.2 | 85.54 | B143 | TH/TBH132MB6 | 40000 | 40000 |
| 11.3 | 4211 | 1.2 | 85.54 | B143 | TP/TBP132MB6 | 40000 | 40000 |
| 11.2 | 4255 | 1.2 | 85.54 | B143 | TBS132MB6 | 40000 | 40000 |
| 11.1 | 4314 | 1.9 | 87.65 | B153 | TH/TBH132MB6 | 65000 | 65000 |
| 11.1 | 4314 | 1.9 | 87.65 | B153 | TP/TBP132MB6 | 65000 | 65000 |
| 11.0 | 4359 | 1.9 | 87.65 | B153 | TBS132MB6 | 65000 | 65000 |
| 10.9 | 4318 | 1.9 | 134.27 | B153 | TP/TBP132MS4 | 65000 | 65000 |
| 10.9 | 4347 | 1.8 | 134.27 | B153 | TH/TBH132S4 | 65000 | 65000 |
| 10.8 | 4388 | 1.1 | 136.44 | B143 | TP/TBP132MS4 | 40000 | 40000 |
| 10.8 | 4377 | 1.8 | 134.27 | B153 | TBS132S4 | 65000 | 65000 |
| 10.7 | 4418 | 1.1 | 136.44 | B143 | TH/TBH132S4 | 40000 | 40000 |
| 10.6 | 4448 | 1.1 | 136.44 | B143 | TBS132S4 | 40000 | 40000 |
| 10.4 | 4580 | 1.8 | 93.05 | B153 | TH/TBH132MB6 | 65000 | 65000 |
| 10.4 | 4580 | 1.8 | 93.05 | B153 | TP/TBP132MB6 | 65000 | 65000 |
| 10.3 | 4633 | 1.1 | 94.13 | B143 | TH/TBH132MB6 | 40000 | 40000 |
| 10.3 | 4633 | 1.1 | 94.13 | B143 | TP/TBP132MB6 | 40000 | 40000 |
| 10.3 | 4628 | 1.8 | 93.05 | B153 | TBS132MB6 | 65000 | 65000 |
| 10.2 | 4681 | 1.1 | 94.13 | B143 | TBS132MB6 | 40000 | 40000 |
| 9.8 | 4811 | 1.0 | 149.59 | B143 | TP/TBP132MS4 | 40000 | 40000 |
| 9.8 | 4843 | 1.0 | 149.59 | B143 | TH/TBH132S4 | 40000 | 40000 |
| 9.8 | 4800 | 1.7 | 149.26 | B153 | TP/TBP132MS4 | 65000 | 65000 |
| 9.8 | 4833 | 1.7 | 149.26 | B153 | TH/TBH132S4 | 65000 | 65000 |
| 9.7 | 4877 | 1.0 | 149.59 | B143 | TBS132S4 | 40000 | 40000 |
| 9.7 | 4866 | 1.6 | 149.26 | B153 | TBS132S4 | 65000 | 65000 |
| 9.4 | 5076 | 1.7 | 103.12 | B153 | TH/TBH132MB6 | 65000 | 65000 |
| 9.4 | 5076 | 1.7 | 103.12 | B153 | TP/TBP132MB6 | 65000 | 65000 |
| 9.3 | 5128 | 1.6 | 103.12 | B153 | TBS132MB6 | 65000 | 65000 |
| 9.2 | 5209 | 1.0 | 105.83 | B143 | TH/TBH132MB6 | 40000 | 40000 |
| 9.2 | 5209 | 1.0 | 105.83 | B143 | TP/TBP132MB6 | 40000 | 40000 |
| 9.1 | 5263 | 1.0 | 105.83 | B143 | TBS132MB6 | 40000 | 40000 |
| 8.9 | 5319 | 1.5 | 165.42 | B153 | TP/TBP132MS4 | 65000 | 65000 |
| 8.8 | 5355 | 0.9 | 166.53 | B143 | TP/TBP132MS4 | 40000 | 40000 |
| 8.8 | 5392 | 0.9 | 166.53 | B143 | TH/TBH132S4 | 40000 | 40000 |
| 8.8 | 5356 | 1.5 | 165.42 | B153 | TH/TBH132S4 | 65000 | 65000 |
| 8.8 | 5393 | 1.5 | 165.42 | B153 | TBS132S4 | 65000 | 65000 |
| 8.7 | 5429 | 0.9 | 166.53 | B143 | TBS132S4 | 40000 | 40000 |
| 8.7 | 5510 | 1.0 | 111.94 | B143 | TH/TBH132MB6 | 40000 | 40000 |
| 8.7 | 5510 | 1.0 | 111.94 | B143 | TP/TBP132MB6 | 40000 | 40000 |
| 8.6 | 5567 | 0.9 | 111.94 | B143 | TBS132MB6 | 40000 | 40000 |
| 7.8 | 6097 | 1.4 | 123.88 | B153 | TH/TBH132MB6 | 65000 | 65000 |
| 7.8 | 6097 | 1.4 | 123.88 | B153 | TP/TBP132MB6 | 65000 | 65000 |

# 5.1 B/BA MOTORIDUTTORE (50Hz)



## 5.50 kW

| n2 [rpm] | M2 [Nm] | fs | i | Riduttore | Motore | Fr2 D-S-P [N] | Fr2 C [N] |
|---|---|---|---|---|---|---|---|
| 7.7 | 6161 | 1.4 | 123.88 | B153 | TBS132MB6 | 65000 | 65000 |
| 7.2 | 6609 | 1.3 | 134.27 | B153 | TH/TBH132MB6 | 65000 | 65000 |
| 7.2 | 6609 | 1.3 | 134.27 | B153 | TP/TBP132MB6 | 65000 | 65000 |
| 7.2 | 6678 | 1.3 | 134.27 | B153 | TBS132MB6 | 65000 | 65000 |
| 6.5 | 7347 | 1.1 | 149.26 | B153 | TH/TBH132MB6 | 65000 | 65000 |
| 6.5 | 7347 | 1.1 | 149.26 | B153 | TP/TBP132MB6 | 65000 | 65000 |
| 6.4 | 7423 | 1.1 | 149.26 | B153 | TBS132MB6 | 65000 | 65000 |
| 5.9 | 8142 | 1.0 | 165.42 | B153 | TH/TBH132MB6 | 65000 | 65000 |
| 5.9 | 8142 | 1.0 | 165.42 | B153 | TP/TBP132MB6 | 65000 | 65000 |
| 5.8 | 8227 | 1.0 | 165.42 | B153 | TBS132MB6 | 65000 | 65000 |

## 7.50 kW

| n2 [rpm] | M2 [Nm] | fs | i | Riduttore | Motore | Fr2 D-S-P [N] | Fr2 C [N] |
|---|---|---|---|---|---|---|---|
| 281.1 | 221 | 2.2 | 10.49 | B083 | TP/TBP132M2 | 11175 | 3193 |
| 279.2 | 223 | 2.2 | 10.49 | B083 | TH/TBH132SB2 | 11196 | 3199 |
| 277.3 | 224 | 2.2 | 10.49 | B083 | TBS132SB2 | 11218 | 3205 |
| 270.1 | 230 | 3.3 | 10.92 | B103 | TP/TBP132M2 | 14138 | 4039 |
| 268.3 | 232 | 3.2 | 10.92 | B103 | TH/TBH132SB2 | 14167 | 4048 |
| 266.5 | 233 | 3.2 | 10.92 | B103 | TBS132SB2 | 14196 | 4056 |
| 244.8 | 254 | 3.0 | 12.05 | B103 | TP/TBP132M2 | 14558 | 4159 |
| 243.2 | 256 | 2.9 | 12.05 | B103 | TH/TBH132SB2 | 14587 | 4168 |
| 241.5 | 258 | 2.9 | 12.05 | B103 | TBS132SB2 | 14617 | 4176 |
| 196.9 | 316 | 2.8 | 14.99 | B103 | TP/TBP132M2 | 15520 | 4434 |
| 195.5 | 318 | 2.8 | 14.99 | B103 | TH/TBH132SB2 | 15551 | 4443 |
| 194.2 | 320 | 2.8 | 14.99 | B103 | TBS132SB2 | 15582 | 4452 |
| 187.0 | 345 | 1.5 | 7.81 | B083 | TH/TBH132MA4 | 12415 | 3547 |
| 187.0 | 345 | 1.5 | 7.81 | B083 | TP/TBP132M4 | 12415 | 3547 |
| 185.7 | 347 | 1.4 | 7.81 | B083 | TBS132MA4 | 12437 | 3553 |
| 179.6 | 359 | 2.2 | 8.13 | B103 | TH/TBH132MA4 | 15901 | 4543 |
| 179.6 | 359 | 2.2 | 8.13 | B103 | TP/TBP132M4 | 15901 | 4543 |
| 178.4 | 361 | 2.2 | 8.13 | B103 | TBS132MA4 | 15932 | 4552 |
| 177.8 | 350 | 1.8 | 16.60 | B083 | TP/TBP132M2 | 12626 | 3607 |
| 176.6 | 352 | 1.8 | 16.60 | B083 | TH/TBH132SB2 | 12648 | 3614 |
| 175.4 | 355 | 1.8 | 16.60 | B083 | TBS132SB2 | 12670 | 3620 |
| 170.8 | 364 | 2.9 | 17.27 | B103 | TP/TBP132M2 | 16169 | 4620 |
| 169.7 | 367 | 2.9 | 17.27 | B103 | TH/TBH132SB2 | 16201 | 4629 |
| 169.3 | 381 | 1.6 | 8.62 | B083 | TH/TBH132MA4 | 12729 | 3637 |
| 169.3 | 381 | 1.6 | 8.62 | B083 | TP/TBP132M4 | 12729 | 3637 |
| 168.5 | 369 | 2.8 | 17.27 | B103 | TBS132SB2 | 16233 | 4638 |
| 168.2 | 383 | 1.6 | 8.62 | B083 | TBS132MA4 | 12750 | 3643 |

# 5.1 B/BA MOTORIDUTTORE (50Hz)



## 7.50 kW

| n2 [rpm] | M2 [Nm] | fs | i | Riduttore | Motore | Fr2 D-S-P [N] | Fr2 C [N] |
|---|---|---|---|---|---|---|---|
| 162.8 | 396 | 2.3 | 8.97 | B103 | TH/TBH132MA4 | 16353 | 4672 |
| 162.8 | 396 | 2.3 | 8.97 | B103 | TP/TBP132M4 | 16353 | 4672 |
| 161.7 | 399 | 2.3 | 8.97 | B103 | TBS132MA4 | 16385 | 4681 |
| 161.0 | 386 | 1.6 | 18.32 | B083 | TP/TBP132M2 | 12945 | 3699 |
| 159.9 | 389 | 1.6 | 18.32 | B083 | TH/TBH132SB2 | 12967 | 3705 |
| 158.8 | 392 | 1.6 | 18.32 | B083 | TBS132SB2 | 12989 | 3711 |
| 154.8 | 402 | 2.6 | 19.06 | B103 | TP/TBP132M2 | 16629 | 4751 |
| 153.8 | 405 | 2.6 | 19.06 | B103 | TH/TBH132SB2 | 16661 | 4760 |
| 152.7 | 407 | 2.6 | 19.06 | B103 | TBS132SB2 | 16694 | 4770 |
| 139.1 | 463 | 1.4 | 10.49 | B083 | TH/TBH132MA4 | 13350 | 3814 |
| 139.1 | 463 | 1.4 | 10.49 | B083 | TP/TBP132M4 | 13350 | 3814 |
| 138.2 | 467 | 1.4 | 10.49 | B083 | TBS132MA4 | 13371 | 3820 |
| 133.7 | 482 | 2.1 | 10.92 | B103 | TH/TBH132MA4 | 17280 | 4937 |
| 133.7 | 482 | 2.1 | 10.92 | B103 | TP/TBP132M4 | 17280 | 4937 |
| 132.8 | 486 | 2.1 | 10.92 | B103 | TBS132MA4 | 17313 | 4947 |
| 126.0 | 512 | 1.5 | 11.59 | B083 | TH/TBH132MA4 | 13660 | 3903 |
| 126.0 | 512 | 1.5 | 11.59 | B083 | TP/TBP132M4 | 13660 | 3903 |
| 125.1 | 515 | 1.5 | 11.59 | B083 | TBS132MA4 | 13682 | 3909 |
| 124.5 | 500 | 2.1 | 23.70 | B103 | TP/TBP132M2 | 17675 | 5050 |
| 123.6 | 503 | 2.1 | 23.70 | B103 | TH/TBH132SB2 | 17708 | 5059 |
| 122.8 | 507 | 2.1 | 23.70 | B103 | TBS132SB2 | 17741 | 5069 |
| 121.8 | 535 | 2.9 | 7.97 | B123 | TP/TBP160M6 | 24861 | 7103 |
| 121.2 | 532 | 1.9 | 12.05 | B103 | TH/TBH132MA4 | 17753 | 5072 |
| 121.2 | 532 | 1.9 | 12.05 | B103 | TP/TBP132M4 | 17753 | 5072 |
| 120.3 | 536 | 1.9 | 12.05 | B103 | TBS132MA4 | 17786 | 5082 |
| 119.4 | 545 | 1.5 | 8.13 | B103 | TP/TBP160M6 | 17810 | 5089 |
| 117.0 | 551 | 3.6 | 12.48 | B123 | TH/TBH132MA4 | 25149 | 7185 |
| 117.0 | 551 | 3.6 | 12.48 | B123 | TP/TBP132M4 | 25149 | 7185 |
| 116.2 | 555 | 3.6 | 12.48 | B123 | TBS132MA4 | 25194 | 7198 |
| 113.9 | 546 | 3.8 | 25.89 | B123 | TP/TBP132M2 | 25414 | 7261 |
| 113.2 | 550 | 3.8 | 25.89 | B123 | TH/TBH132SB2 | 25460 | 7274 |
| 112.4 | 553 | 3.8 | 25.89 | B123 | TBS132SB2 | 25506 | 7287 |
| 111.3 | 559 | 2.0 | 26.51 | B103 | TP/TBP132M2 | 18225 | 5207 |
| 110.5 | 563 | 2.0 | 26.51 | B103 | TH/TBH132SB2 | 18259 | 5217 |
| 110.4 | 563 | 1.1 | 26.71 | B083 | TP/TBP132M2 | 14151 | 4043 |
| 109.8 | 567 | 2.0 | 26.51 | B103 | TBS132SB2 | 18293 | 5226 |
| 109.7 | 567 | 1.1 | 26.71 | B083 | TH/TBH132SB2 | 14173 | 4049 |
| 108.9 | 571 | 1.1 | 26.71 | B083 | TBS132SB2 | 14194 | 4055 |
| 108.2 | 602 | 1.6 | 8.97 | B103 | TP/TBP160M6 | 18287 | 5225 |
| 107.2 | 580 | 3.6 | 27.51 | B123 | TP/TBP132M2 | 25822 | 7378 |
| 106.5 | 584 | 3.6 | 27.51 | B123 | TH/TBH132SB2 | 25868 | 7391 |

# 5.1 B/BA MOTORIDUTTORE (50Hz)



## 7.50 kW

| n2 [rpm] | M2 [Nm] | fs | i | Riduttore | Motore | Fr2 D-S-P [N] | Fr2 C [N] |
|---|---|---|---|---|---|---|---|
| 105.8 | 588 | 3.6 | 27.51 | B123 | TBS132SB2 | 25914 | 7404 |
| 105.5 | 611 | 3.4 | 13.84 | B123 | TH/TBH132MA4 | 25837 | 7382 |
| 105.5 | 611 | 3.4 | 13.84 | B123 | TP/TBP132M4 | 25837 | 7382 |
| 104.7 | 615 | 3.4 | 13.84 | B123 | TBS132MA4 | 25882 | 7395 |
| 101.2 | 637 | 1.3 | 14.43 | B083 | TH/TBH132MA4 | 14334 | 4095 |
| 101.2 | 637 | 1.3 | 14.43 | B083 | TP/TBP132M4 | 14334 | 4095 |
| 100.8 | 646 | 2.9 | 9.62 | B123 | TP/TBP160M6 | 26105 | 7459 |
| 100.5 | 641 | 1.3 | 14.43 | B083 | TBS132MA4 | 14354 | 4101 |
| 100.0 | 622 | 1.0 | 29.50 | B083 | TP/TBP132M2 | 14460 | 4131 |
| 99.3 | 626 | 1.0 | 29.50 | B083 | TH/TBH132SB2 | 14481 | 4137 |
| 98.7 | 631 | 1.0 | 29.50 | B083 | TBS132SB2 | 14502 | 4143 |
| 97.4 | 662 | 1.8 | 14.99 | B103 | TH/TBH132MA4 | 18819 | 5377 |
| 97.4 | 662 | 1.8 | 14.99 | B103 | TP/TBP132M4 | 18819 | 5377 |
| 96.8 | 666 | 1.8 | 14.99 | B103 | TBS132MA4 | 18853 | 5386 |
| 96.5 | 644 | 1.9 | 30.55 | B103 | TP/TBP132M2 | 18931 | 5409 |
| 95.9 | 649 | 1.8 | 30.55 | B103 | TH/TBH132SB2 | 18965 | 5418 |
| 95.8 | 649 | 3.2 | 30.79 | B123 | TP/TBP132M2 | 26584 | 7595 |
| 95.2 | 653 | 1.8 | 30.55 | B103 | TBS132SB2 | 18999 | 5428 |
| 95.2 | 654 | 3.2 | 30.79 | B123 | TH/TBH132SB2 | 26630 | 7609 |
| 94.9 | 679 | 3.1 | 15.38 | B123 | TH/TBH132MA4 | 26538 | 7582 |
| 94.9 | 679 | 3.1 | 15.38 | B123 | TP/TBP132M4 | 26538 | 7582 |
| 94.5 | 658 | 3.2 | 30.79 | B123 | TBS132SB2 | 26676 | 7622 |
| 94.4 | 659 | 3.2 | 31.26 | B123 | TP/TBP132M2 | 26687 | 7625 |
| 94.3 | 684 | 3.1 | 15.38 | B123 | TBS132MA4 | 26583 | 7595 |
| 93.9 | 694 | 3.0 | 10.33 | B123 | TP/TBP160M6 | 26580 | 7594 |
| 93.7 | 664 | 3.2 | 31.26 | B123 | TH/TBH132SB2 | 26733 | 7638 |
| 93.1 | 668 | 3.1 | 31.26 | B123 | TBS132SB2 | 26779 | 7651 |
| 89.2 | 697 | 1.8 | 33.07 | B103 | TP/TBP132M2 | 19327 | 5522 |
| 88.8 | 733 | 1.4 | 10.92 | B103 | TP/TBP160M6 | 19256 | 5502 |
| 88.6 | 702 | 1.8 | 33.07 | B103 | TH/TBH132SB2 | 19362 | 5532 |
| 88.0 | 733 | 1.2 | 16.60 | B083 | TH/TBH132MA4 | 14746 | 4213 |
| 88.0 | 733 | 1.2 | 16.60 | B083 | TP/TBP132M4 | 14746 | 4213 |
| 88.0 | 707 | 1.8 | 33.07 | B103 | TBS132SB2 | 19396 | 5542 |
| 87.4 | 738 | 1.2 | 16.60 | B083 | TBS132MA4 | 14765 | 4219 |
| 85.1 | 731 | 2.9 | 34.68 | B123 | TP/TBP132M2 | 27391 | 7826 |
| 84.5 | 763 | 1.8 | 17.27 | B103 | TH/TBH132MA4 | 19522 | 5578 |
| 84.5 | 763 | 1.8 | 17.27 | B103 | TP/TBP132M4 | 19522 | 5578 |
| 84.5 | 736 | 2.9 | 34.68 | B123 | TH/TBH132SB2 | 27437 | 7839 |
| 84.0 | 768 | 1.8 | 17.27 | B103 | TBS132MA4 | 19556 | 5587 |
| 83.9 | 741 | 2.8 | 34.68 | B123 | TBS132SB2 | 27484 | 7852 |
| 82.2 | 756 | 1.7 | 35.87 | B103 | TP/TBP132M2 | 19738 | 5639 |

# 5.1 B/BA MOTORIDUTTORE (50Hz)



## 7.50 kW

| n2 [rpm] | M2 [Nm] | fs | i | Riduttore | Motore | Fr2 D-S-P [N] | Fr2 C [N] |
|---|---|---|---|---|---|---|---|
| 81.7 | 762 | 1.7 | 35.87 | B103 | TH/TBH132SB2 | 19772 | 5649 |
| 81.1 | 767 | 1.7 | 35.87 | B103 | TBS132SB2 | 19807 | 5659 |
| 80.5 | 809 | 1.3 | 12.05 | B103 | TP/TBP160M6 | 19743 | 5641 |
| 79.7 | 809 | 1.1 | 18.32 | B083 | TH/TBH132MA4 | 15026 | 4293 |
| 79.7 | 809 | 1.1 | 18.32 | B083 | TP/TBP132M4 | 15026 | 4293 |
| 79.1 | 815 | 1.0 | 18.32 | B083 | TBS132MA4 | 15045 | 4298 |
| 78.6 | 820 | 2.7 | 18.58 | B123 | TH/TBH132MA4 | 27795 | 7941 |
| 78.6 | 820 | 2.7 | 18.58 | B123 | TP/TBP132M4 | 27795 | 7941 |
| 78.1 | 826 | 2.7 | 18.58 | B123 | TBS132MA4 | 27840 | 7954 |
| 77.7 | 838 | 2.5 | 12.48 | B123 | TP/TBP160M6 | 27830 | 7952 |
| 76.6 | 841 | 1.7 | 19.06 | B103 | TH/TBH132MA4 | 20012 | 5718 |
| 76.6 | 841 | 1.7 | 19.06 | B103 | TP/TBP132M4 | 20012 | 5718 |
| 76.1 | 847 | 1.7 | 19.06 | B103 | TBS132MA4 | 20046 | 5727 |
| 72.8 | 855 | 2.5 | 40.53 | B123 | TP/TBP132M2 | 28446 | 8128 |
| 72.3 | 860 | 2.4 | 40.53 | B123 | TH/TBH132SB2 | 28492 | 8141 |
| 71.8 | 866 | 2.4 | 40.53 | B123 | TBS132SB2 | 28539 | 8154 |
| 71.7 | 867 | 1.5 | 41.12 | B103 | TP/TBP132M2 | 20430 | 5837 |
| 71.2 | 873 | 1.5 | 41.12 | B103 | TH/TBH132SB2 | 20465 | 5847 |
| 70.8 | 879 | 1.5 | 41.12 | B103 | TBS132SB2 | 20500 | 5857 |
| 70.8 | 910 | 2.7 | 20.61 | B123 | TH/TBH132MA4 | 28482 | 8138 |
| 70.8 | 910 | 2.7 | 20.61 | B123 | TP/TBP132M4 | 28482 | 8138 |
| 70.4 | 916 | 2.7 | 20.61 | B123 | TBS132MA4 | 28528 | 8151 |
| 70.1 | 929 | 2.4 | 13.84 | B123 | TP/TBP160M6 | 28513 | 8147 |
| 67.0 | 972 | 3.3 | 14.49 | B143 | TP/TBP160M6 | 28074 | 28074 |
| 66.8 | 931 | 3.9 | 44.16 | B143 | TP/TBP132M2 | 28230 | 28230 |
| 66.3 | 938 | 3.8 | 44.16 | B143 | TH/TBH132SB2 | 28280 | 28280 |
| 66.1 | 941 | 1.4 | 44.61 | B103 | TP/TBP132M2 | 20843 | 5955 |
| 65.9 | 944 | 3.8 | 44.16 | B143 | TBS132SB2 | 28331 | 28331 |
| 65.7 | 947 | 1.3 | 44.61 | B103 | TH/TBH132SB2 | 20877 | 5965 |
| 65.7 | 947 | 2.4 | 44.89 | B123 | TP/TBP132M2 | 29134 | 8324 |
| 65.3 | 953 | 2.4 | 44.89 | B123 | TH/TBH132SB2 | 29180 | 8337 |
| 65.2 | 954 | 1.3 | 44.61 | B103 | TBS132SB2 | 20912 | 5975 |
| 64.8 | 960 | 2.3 | 44.89 | B123 | TBS132SB2 | 29226 | 8350 |
| 64.7 | 1006 | 1.3 | 14.99 | B103 | TP/TBP160M6 | 20823 | 5949 |
| 64.1 | 1006 | 2.8 | 22.78 | B123 | TH/TBH132MA4 | 29140 | 8326 |
| 64.1 | 1006 | 2.8 | 22.78 | B123 | TP/TBP132M4 | 29140 | 8326 |
| 63.7 | 1013 | 2.8 | 22.78 | B123 | TBS132MA4 | 29185 | 8338 |
| 63.1 | 1032 | 2.1 | 15.38 | B123 | TP/TBP160M6 | 29198 | 8342 |
| 62.4 | 997 | 1.3 | 47.28 | B103 | TP/TBP132M2 | 21138 | 6039 |
| 62.0 | 1004 | 1.3 | 47.28 | B103 | TH/TBH132SB2 | 21172 | 6049 |
| 61.6 | 1046 | 1.3 | 23.70 | B103 | TH/TBH132MA4 | 21096 | 6027 |

# 5.1 B/BA MOTORIDUTTORE (50Hz)



## 7.50 kW

| n2 [rpm] | M2 [Nm] | fs | i | Riduttore | Motore | Fr2 D-S-P [N] | Fr2 C [N] |
|---|---|---|---|---|---|---|---|
| 61.6 | 1046 | 1.3 | 23.70 | B103 | TP/TBP132M4 | 21096 | 6027 |
| 61.5 | 1011 | 1.3 | 47.28 | B103 | TBS132SB2 | 21207 | 6059 |
| 61.2 | 1054 | 1.3 | 23.70 | B103 | TBS132MA4 | 21130 | 6037 |
| 61.0 | 1020 | 3.7 | 48.35 | B143 | TP/TBP132M2 | 28896 | 28896 |
| 60.6 | 1027 | 3.7 | 48.35 | B143 | TH/TBH132SB2 | 28946 | 28946 |
| 60.2 | 1034 | 3.6 | 48.35 | B143 | TBS132SB2 | 28996 | 28996 |
| 59.2 | 1050 | 2.3 | 49.80 | B123 | TP/TBP132M2 | 29825 | 8521 |
| 58.8 | 1057 | 2.3 | 49.80 | B123 | TH/TBH132SB2 | 29870 | 8534 |
| 58.7 | 1059 | 1.2 | 50.24 | B103 | TP/TBP132M2 | 21444 | 6127 |
| 58.4 | 1065 | 2.3 | 49.80 | B123 | TBS132SB2 | 29915 | 8547 |
| 58.3 | 1067 | 1.2 | 50.24 | B103 | TH/TBH132SB2 | 21478 | 6137 |
| 57.9 | 1074 | 1.2 | 50.24 | B103 | TBS132SB2 | 21512 | 6146 |
| 56.9 | 1144 | 2.9 | 17.04 | B143 | TP/TBP160M6 | 29244 | 29244 |
| 56.4 | 1143 | 2.4 | 25.89 | B123 | TH/TBH132MA4 | 29965 | 8561 |
| 56.4 | 1143 | 2.4 | 25.89 | B123 | TP/TBP132M4 | 29965 | 8561 |
| 56.2 | 1159 | 1.3 | 17.27 | B103 | TP/TBP160M6 | 21518 | 6148 |
| 56.0 | 1151 | 2.4 | 25.89 | B123 | TBS132MA4 | 30000 | 8574 |
| 55.6 | 1118 | 1.1 | 53.02 | B103 | TP/TBP132M2 | 21714 | 6204 |
| 55.5 | 1121 | 3.3 | 53.16 | B143 | TP/TBP132M2 | 29594 | 29594 |
| 55.3 | 1126 | 1.1 | 53.02 | B103 | TH/TBH132SB2 | 21748 | 6214 |
| 55.1 | 1171 | 1.3 | 26.51 | B103 | TH/TBH132MA4 | 21648 | 6185 |
| 55.1 | 1171 | 1.3 | 26.51 | B103 | TP/TBP132M4 | 21648 | 6185 |
| 55.1 | 1129 | 3.3 | 53.16 | B143 | TH/TBH132SB2 | 29644 | 29644 |
| 54.9 | 1133 | 1.1 | 53.02 | B103 | TBS132SB2 | 21783 | 6224 |
| 54.7 | 1179 | 1.3 | 26.51 | B103 | TBS132MA4 | 21682 | 6195 |
| 54.7 | 1136 | 3.3 | 53.16 | B143 | TBS132SB2 | 29695 | 29695 |
| 54.3 | 1145 | 2.1 | 54.30 | B123 | TP/TBP132M2 | 30000 | 8683 |
| 54.0 | 1153 | 2.1 | 54.30 | B123 | TH/TBH132SB2 | 30000 | 8696 |
| 54.0 | 1152 | 3.3 | 54.63 | B143 | TP/TBP132M2 | 29795 | 29795 |
| 53.6 | 1161 | 2.1 | 54.30 | B123 | TBS132SB2 | 30000 | 8709 |
| 53.6 | 1160 | 3.2 | 54.63 | B143 | TH/TBH132SB2 | 29845 | 29845 |
| 53.3 | 1168 | 3.2 | 54.63 | B143 | TBS132SB2 | 29896 | 29896 |
| 53.2 | 1212 | 3.8 | 27.44 | B143 | TH/TBH132MA4 | 29770 | 29770 |
| 53.2 | 1212 | 3.8 | 27.44 | B143 | TP/TBP132M4 | 29770 | 29770 |
| 53.1 | 1215 | 2.3 | 27.51 | B123 | TH/TBH132MA4 | 30000 | 8671 |
| 53.1 | 1215 | 2.3 | 27.51 | B123 | TP/TBP132M4 | 30000 | 8671 |
| 52.8 | 1220 | 3.8 | 27.44 | B143 | TBS132MA4 | 29819 | 29819 |
| 52.7 | 1223 | 2.3 | 27.51 | B123 | TBS132MA4 | 30000 | 8683 |
| 52.2 | 1247 | 1.9 | 18.58 | B123 | TP/TBP160M6 | 30000 | 8684 |
| 52.0 | 1252 | 3.0 | 18.66 | B143 | TP/TBP160M6 | 29897 | 29897 |
| 50.9 | 1279 | 1.1 | 19.06 | B103 | TP/TBP160M6 | 21994 | 6284 |

# 5.1 B/BA MOTORIDUTTORE (50Hz)



## 7.50 kW

| n2 [rpm] | M2 [Nm] | fs | i | Riduttore | Motore | Fr2 D-S-P [N] | Fr2 C [N] |
|---|---|---|---|---|---|---|---|
| 50.4 | 1234 | 1.0 | 58.50 | B103 | TP/TBP132M2 | 22000 | 6344 |
| 50.1 | 1242 | 1.0 | 58.50 | B103 | TH/TBH132SB2 | 22000 | 6354 |
| 50.0 | 1244 | 3.0 | 59.02 | B143 | TP/TBP132M2 | 30364 | 30364 |
| 49.7 | 1251 | 1.0 | 58.50 | B103 | TBS132SB2 | 22000 | 6363 |
| 49.7 | 1252 | 1.9 | 59.36 | B123 | TP/TBP132M2 | 30000 | 8847 |
| 49.6 | 1253 | 3.0 | 59.02 | B143 | TH/TBH132SB2 | 30414 | 30414 |
| 49.4 | 1260 | 1.9 | 59.36 | B123 | TH/TBH132SB2 | 30000 | 8860 |
| 49.3 | 1262 | 3.0 | 59.02 | B143 | TBS132SB2 | 30465 | 30465 |
| 49.0 | 1269 | 1.9 | 59.36 | B123 | TBS132SB2 | 30000 | 8872 |
| 48.6 | 1327 | 3.5 | 30.05 | B143 | TH/TBH132MA4 | 30424 | 30424 |
| 48.6 | 1327 | 3.5 | 30.05 | B143 | TP/TBP132M4 | 30424 | 30424 |
| 48.3 | 1336 | 3.5 | 30.05 | B143 | TBS132MA4 | 30474 | 30474 |
| 47.8 | 1349 | 1.2 | 30.55 | B103 | TH/TBH132MA4 | 22000 | 6381 |
| 47.8 | 1349 | 1.2 | 30.55 | B103 | TP/TBP132M4 | 22000 | 6381 |
| 47.5 | 1358 | 1.2 | 30.55 | B103 | TBS132MA4 | 22000 | 6391 |
| 47.4 | 1360 | 2.1 | 30.79 | B123 | TH/TBH132MA4 | 30000 | 8870 |
| 47.4 | 1360 | 2.1 | 30.79 | B123 | TP/TBP132M4 | 30000 | 8870 |
| 47.1 | 1383 | 1.9 | 20.61 | B123 | TP/TBP160M6 | 30000 | 8864 |
| 47.1 | 1369 | 2.0 | 30.79 | B123 | TBS132MA4 | 30000 | 8882 |
| 47.1 | 1320 | 1.9 | 62.59 | B123 | TP/TBP132M2 | 30000 | 8943 |
| 46.8 | 1329 | 1.9 | 62.59 | B123 | TH/TBH132SB2 | 30000 | 8955 |
| 46.7 | 1380 | 2.0 | 31.26 | B123 | TH/TBH132MA4 | 30000 | 8896 |
| 46.7 | 1380 | 2.0 | 31.26 | B123 | TP/TBP132M4 | 30000 | 8896 |
| 46.5 | 1338 | 1.8 | 62.59 | B123 | TBS132SB2 | 30000 | 8967 |
| 46.4 | 1390 | 2.0 | 31.26 | B123 | TBS132MA4 | 30000 | 8908 |
| 46.2 | 1409 | 3.0 | 21.00 | B143 | TP/TBP160M6 | 30743 | 30743 |
| 45.5 | 1368 | 2.7 | 64.88 | B143 | TP/TBP132M2 | 31060 | 31060 |
| 45.2 | 1378 | 2.7 | 64.88 | B143 | TH/TBH132SB2 | 31110 | 31110 |
| 44.9 | 1387 | 2.7 | 64.88 | B143 | TBS132SB2 | 31160 | 31160 |
| 44.2 | 1460 | 1.2 | 33.07 | B103 | TH/TBH132MA4 | 22000 | 6488 |
| 44.2 | 1460 | 1.2 | 33.07 | B103 | TP/TBP132M4 | 22000 | 6488 |
| 44.2 | 1457 | 3.2 | 33.01 | B143 | TH/TBH132MA4 | 31099 | 31099 |
| 44.2 | 1457 | 3.2 | 33.01 | B143 | TP/TBP132M4 | 31099 | 31099 |
| 43.9 | 1470 | 1.2 | 33.07 | B103 | TBS132MA4 | 22000 | 6497 |
| 43.9 | 1467 | 3.2 | 33.01 | B143 | TBS132MA4 | 31149 | 31149 |
| 42.6 | 1529 | 1.9 | 22.78 | B123 | TP/TBP160M6 | 30000 | 9032 |
| 42.6 | 1529 | 3.0 | 22.77 | B143 | TP/TBP160M6 | 31320 | 31320 |
| 42.5 | 1464 | 1.7 | 69.43 | B123 | TP/TBP132M2 | 30000 | 9125 |
| 42.2 | 1474 | 1.7 | 69.43 | B123 | TH/TBH132SB2 | 30000 | 9137 |
| 42.1 | 1531 | 1.8 | 34.68 | B123 | TH/TBH132MA4 | 30000 | 9071 |
| 42.1 | 1531 | 1.8 | 34.68 | B123 | TP/TBP132M4 | 30000 | 9071 |

# 5.1 B/BA MOTORIDUTTORE (50Hz)



## 7.50 kW

| n2 [rpm] | M2 [Nm] | fs | i | Riduttore | Motore | Fr2 D-S-P [N] | Fr2 C [N] |
|---|---|---|---|---|---|---|---|
| 41.9 | 1484 | 1.7 | 69.43 | B123 | TBS132SB2 | 30000 | 9149 |
| 41.9 | 1485 | 2.5 | 70.43 | B143 | TP/TBP132M2 | 31660 | 31660 |
| 41.8 | 1542 | 1.8 | 34.68 | B123 | TBS132MA4 | 30000 | 9082 |
| 41.6 | 1495 | 2.5 | 70.43 | B143 | TH/TBH132SB2 | 31709 | 31709 |
| 41.5 | 1500 | 4.0 | 71.15 | B153 | TP/TBP132M2 | 55533 | 55533 |
| 41.3 | 1506 | 2.5 | 70.43 | B143 | TBS132SB2 | 31759 | 31759 |
| 41.2 | 1510 | 4.0 | 71.15 | B153 | TH/TBH132SB2 | 55647 | 55647 |
| 40.9 | 1591 | 0.9 | 23.70 | B103 | TP/TBP160M6 | 22000 | 6575 |
| 40.9 | 1521 | 3.9 | 71.15 | B153 | TBS132SB2 | 55763 | 55763 |
| 40.7 | 1584 | 1.1 | 35.87 | B103 | TH/TBH132MA4 | 22000 | 6595 |
| 40.7 | 1584 | 1.1 | 35.87 | B103 | TP/TBP132M4 | 22000 | 6595 |
| 40.4 | 1595 | 1.1 | 35.87 | B103 | TBS132MA4 | 22000 | 6604 |
| 39.8 | 1619 | 3.0 | 36.67 | B143 | TH/TBH132MA4 | 31847 | 31847 |
| 39.8 | 1619 | 3.0 | 36.67 | B143 | TP/TBP132M4 | 31847 | 31847 |
| 39.6 | 1569 | 1.7 | 74.42 | B123 | TP/TBP132M2 | 30000 | 9243 |
| 39.5 | 1630 | 2.9 | 36.67 | B143 | TBS132MA4 | 31895 | 31895 |
| 39.4 | 1580 | 1.7 | 74.42 | B123 | TH/TBH132SB2 | 30000 | 9254 |
| 39.1 | 1591 | 1.7 | 74.42 | B123 | TBS132SB2 | 30000 | 9266 |
| 38.3 | 1626 | 2.3 | 77.12 | B143 | TP/TBP132M2 | 32315 | 32315 |
| 38.2 | 1628 | 3.7 | 77.22 | B153 | TP/TBP132M2 | 56927 | 56927 |
| 38.0 | 1637 | 2.3 | 77.12 | B143 | TH/TBH132SB2 | 32364 | 32364 |
| 37.9 | 1639 | 3.7 | 77.22 | B153 | TH/TBH132SB2 | 57044 | 57044 |
| 37.8 | 1720 | 2.8 | 25.63 | B143 | TP/TBP160M6 | 32147 | 32147 |
| 37.7 | 1649 | 2.3 | 77.12 | B143 | TBS132SB2 | 32413 | 32413 |
| 37.7 | 1651 | 3.6 | 77.22 | B153 | TBS132SB2 | 57162 | 57162 |
| 37.5 | 1738 | 1.7 | 25.89 | B123 | TP/TBP160M6 | 30000 | 9234 |
| 36.9 | 1688 | 1.6 | 80.04 | B123 | TP/TBP132M2 | 30000 | 9362 |
| 36.6 | 1699 | 1.5 | 80.04 | B123 | TH/TBH132SB2 | 30000 | 9373 |
| 36.4 | 1711 | 1.5 | 80.04 | B123 | TBS132SB2 | 30000 | 9384 |
| 36.2 | 1779 | 2.7 | 40.29 | B143 | TH/TBH132MA4 | 32504 | 32504 |
| 36.2 | 1779 | 2.7 | 40.29 | B143 | TP/TBP132M4 | 32504 | 32504 |
| 36.0 | 1790 | 1.6 | 40.53 | B123 | TH/TBH132MA4 | 30000 | 9316 |
| 36.0 | 1790 | 1.6 | 40.53 | B123 | TP/TBP132M4 | 30000 | 9316 |
| 36.0 | 1791 | 2.7 | 40.29 | B143 | TBS132MA4 | 32552 | 32552 |
| 35.8 | 1802 | 1.6 | 40.53 | B123 | TBS132MA4 | 30000 | 9327 |
| 35.5 | 1816 | 0.9 | 41.12 | B103 | TH/TBH132MA4 | 22000 | 6769 |
| 35.5 | 1816 | 0.9 | 41.12 | B103 | TP/TBP132M4 | 22000 | 6769 |
| 35.3 | 1828 | 0.9 | 41.12 | B103 | TBS132MA4 | 22000 | 6778 |
| 35.3 | 1846 | 1.6 | 27.51 | B123 | TP/TBP160M6 | 30000 | 9324 |
| 35.3 | 1842 | 2.6 | 27.44 | B143 | TP/TBP160M6 | 32618 | 32618 |
| 35.2 | 1769 | 3.4 | 83.89 | B153 | TP/TBP132M2 | 58364 | 58364 |

# 5.1 B/BA MOTORIDUTTORE (50Hz)



## 7.50 kW

| n2 [rpm] | M2 [Nm] | fs | i | Riduttore | Motore | Fr2 D-S-P [N] | Fr2 C [N] |
|---|---|---|---|---|---|---|---|
| 34.9 | 1781 | 3.4 | 83.89 | B153 | TH/TBH132SB2 | 58483 | 58483 |
| 34.7 | 1793 | 3.3 | 83.89 | B153 | TBS132SB2 | 58604 | 58604 |
| 34.5 | 1804 | 2.1 | 85.54 | B143 | TP/TBP132M2 | 33054 | 33054 |
| 34.3 | 1816 | 2.1 | 85.54 | B143 | TH/TBH132SB2 | 33102 | 33102 |
| 34.0 | 1829 | 2.1 | 85.54 | B143 | TBS132SB2 | 33150 | 33150 |
| 33.7 | 1848 | 3.2 | 87.65 | B153 | TP/TBP132M2 | 59137 | 59137 |
| 33.4 | 1861 | 3.2 | 87.65 | B153 | TH/TBH132SB2 | 59258 | 59258 |
| 33.2 | 1874 | 3.2 | 87.65 | B153 | TBS132SB2 | 59379 | 59379 |
| 33.1 | 1950 | 2.5 | 44.16 | B143 | TH/TBH132MA4 | 33133 | 33133 |
| 33.1 | 1950 | 2.5 | 44.16 | B143 | TP/TBP132M4 | 33133 | 33133 |
| 32.8 | 1895 | 1.4 | 89.87 | B123 | TP/TBP132M2 | 30000 | 9541 |
| 32.8 | 1963 | 2.4 | 44.16 | B143 | TBS132MA4 | 33179 | 33179 |
| 32.6 | 1908 | 1.4 | 89.87 | B123 | TH/TBH132SB2 | 30000 | 9551 |
| 32.5 | 1982 | 1.5 | 44.89 | B123 | TH/TBH132MA4 | 30000 | 9464 |
| 32.5 | 1982 | 1.5 | 44.89 | B123 | TP/TBP132M4 | 30000 | 9464 |
| 32.4 | 1921 | 1.4 | 89.87 | B123 | TBS132SB2 | 30000 | 9561 |
| 32.3 | 1996 | 1.5 | 44.89 | B123 | TBS132MA4 | 30000 | 9473 |
| 32.3 | 2017 | 2.4 | 30.05 | B143 | TP/TBP160M6 | 33229 | 33229 |
| 31.7 | 1962 | 3.1 | 93.05 | B153 | TP/TBP132M2 | 60201 | 60201 |
| 31.5 | 2067 | 1.4 | 30.79 | B123 | TP/TBP160M6 | 30000 | 9480 |
| 31.5 | 1975 | 3.0 | 93.05 | B153 | TH/TBH132SB2 | 60323 | 60323 |
| 31.3 | 1985 | 1.9 | 94.13 | B143 | TP/TBP132M2 | 33721 | 33721 |
| 31.3 | 1989 | 3.0 | 93.05 | B153 | TBS132SB2 | 60447 | 60447 |
| 31.1 | 1998 | 1.9 | 94.13 | B143 | TH/TBH132SB2 | 33768 | 33768 |
| 31.0 | 2098 | 1.4 | 31.26 | B123 | TP/TBP160M6 | 30000 | 9500 |
| 30.9 | 2012 | 1.9 | 94.13 | B143 | TBS132SB2 | 33815 | 33815 |
| 30.7 | 2099 | 3.8 | 47.53 | B153 | TH/TBH132MA4 | 60664 | 60664 |
| 30.7 | 2099 | 3.8 | 47.53 | B153 | TP/TBP132M4 | 60664 | 60664 |
| 30.5 | 2113 | 3.8 | 47.53 | B153 | TBS132MA4 | 60787 | 60787 |
| 30.2 | 2135 | 2.3 | 48.35 | B143 | TH/TBH132MA4 | 33737 | 33737 |
| 30.2 | 2135 | 2.3 | 48.35 | B143 | TP/TBP132M4 | 33737 | 33737 |
| 30.0 | 2150 | 2.3 | 48.35 | B143 | TBS132MA4 | 33782 | 33782 |
| 29.6 | 2102 | 1.2 | 99.70 | B123 | TP/TBP132M2 | 30000 | 9688 |
| 29.4 | 2117 | 1.2 | 99.70 | B123 | TH/TBH132SB2 | 30000 | 9697 |
| 29.4 | 2216 | 2.2 | 33.01 | B143 | TP/TBP160M6 | 33845 | 33845 |
| 29.3 | 2199 | 1.5 | 49.80 | B123 | TH/TBH132MA4 | 30000 | 9600 |
| 29.3 | 2199 | 1.5 | 49.80 | B123 | TP/TBP132M4 | 30000 | 9600 |
| 29.2 | 2131 | 1.2 | 99.70 | B123 | TBS132SB2 | 30000 | 9706 |
| 29.1 | 2214 | 1.4 | 49.80 | B123 | TBS132MA4 | 30000 | 9608 |
| 28.9 | 2232 | 3.6 | 50.56 | B153 | TH/TBH132MA4 | 61781 | 61781 |
| 28.9 | 2232 | 3.6 | 50.56 | B153 | TP/TBP132M4 | 61781 | 61781 |

# 5.1 B/BA MOTORIDUTTORE (50Hz)



## 7.50 kW

| n2 [rpm] | M2 [Nm] | fs | i | Riduttore | Motore | Fr2 D-S-P [N] | Fr2 C [N] |
|---|---|---|---|---|---|---|---|
| 28.8 | 2257 | 3.7 | 33.63 | B153 | TP/TBP160M6 | 61770 | 61770 |
| 28.7 | 2248 | 3.6 | 50.56 | B153 | TBS132MA4 | 61906 | 61906 |
| 28.6 | 2174 | 2.8 | 103.12 | B153 | TP/TBP132M2 | 62066 | 62066 |
| 28.4 | 2189 | 2.7 | 103.12 | B153 | TH/TBH132SB2 | 62190 | 62190 |
| 28.2 | 2204 | 2.7 | 103.12 | B153 | TBS132SB2 | 62316 | 62316 |
| 28.0 | 2328 | 1.3 | 34.68 | B123 | TP/TBP160M6 | 30000 | 9626 |
| 27.9 | 2232 | 1.7 | 105.83 | B143 | TP/TBP132M2 | 34513 | 34513 |
| 27.7 | 2249 | 1.2 | 106.65 | B123 | TP/TBP132M2 | 30000 | 9776 |
| 27.7 | 2247 | 1.7 | 105.83 | B143 | TH/TBH132SB2 | 34558 | 34558 |
| 27.7 | 2350 | 3.6 | 35.02 | B153 | TP/TBP160M6 | 62506 | 62506 |
| 27.5 | 2264 | 1.2 | 106.65 | B123 | TH/TBH132SB2 | 30000 | 9784 |
| 27.5 | 2347 | 2.1 | 53.16 | B143 | TH/TBH132MA4 | 34349 | 34349 |
| 27.5 | 2347 | 2.1 | 53.16 | B143 | TP/TBP132M4 | 34349 | 34349 |
| 27.5 | 2262 | 1.7 | 105.83 | B143 | TBS132SB2 | 34603 | 34603 |
| 27.3 | 2280 | 1.2 | 106.65 | B123 | TBS132SB2 | 30000 | 9793 |
| 27.3 | 2363 | 2.1 | 53.16 | B143 | TBS132MA4 | 34392 | 34392 |
| 26.9 | 2397 | 1.3 | 54.30 | B123 | TH/TBH132MA4 | 30000 | 9700 |
| 26.9 | 2397 | 1.3 | 54.30 | B123 | TP/TBP132M4 | 30000 | 9700 |
| 26.7 | 2414 | 1.3 | 54.30 | B123 | TBS132MA4 | 30000 | 9708 |
| 26.7 | 2412 | 2.1 | 54.63 | B143 | TH/TBH132MA4 | 34520 | 34520 |
| 26.7 | 2412 | 2.1 | 54.63 | B143 | TP/TBP132M4 | 34520 | 34520 |
| 26.7 | 2413 | 3.3 | 54.64 | B153 | TH/TBH132MA4 | 63203 | 63203 |
| 26.7 | 2413 | 3.3 | 54.64 | B153 | TP/TBP132M4 | 63203 | 63203 |
| 26.5 | 2461 | 2.0 | 36.67 | B143 | TP/TBP160M6 | 34507 | 34507 |
| 26.5 | 2429 | 2.1 | 54.63 | B143 | TBS132MA4 | 34562 | 34562 |
| 26.5 | 2429 | 3.3 | 54.64 | B153 | TBS132MA4 | 63331 | 63331 |
| 26.4 | 2360 | 1.6 | 111.94 | B143 | TP/TBP132M2 | 34880 | 34880 |
| 26.2 | 2377 | 1.6 | 111.94 | B143 | TH/TBH132SB2 | 34924 | 34924 |
| 26.0 | 2393 | 1.6 | 111.94 | B143 | TBS132SB2 | 34968 | 34968 |
| 25.5 | 2529 | 3.2 | 57.27 | B153 | TH/TBH132MA4 | 64077 | 64077 |
| 25.5 | 2529 | 3.2 | 57.27 | B153 | TP/TBP132M4 | 64077 | 64077 |
| 25.3 | 2546 | 3.1 | 57.27 | B153 | TBS132MA4 | 64206 | 64206 |
| 25.0 | 2605 | 3.2 | 38.81 | B153 | TP/TBP160M6 | 64407 | 64407 |
| 24.7 | 2522 | 1.0 | 119.60 | B123 | TP/TBP132M2 | 30000 | 9908 |
| 24.7 | 2606 | 1.9 | 59.02 | B143 | TH/TBH132MA4 | 34992 | 34992 |
| 24.7 | 2606 | 1.9 | 59.02 | B143 | TP/TBP132M4 | 34992 | 34992 |
| 24.6 | 2621 | 1.2 | 59.36 | B123 | TH/TBH132MA4 | 30000 | 9790 |
| 24.6 | 2621 | 1.2 | 59.36 | B123 | TP/TBP132M4 | 30000 | 9790 |
| 24.6 | 2624 | 1.9 | 59.02 | B143 | TBS132MA4 | 35033 | 35033 |
| 24.5 | 2539 | 1.0 | 119.60 | B123 | TH/TBH132SB2 | 30000 | 9915 |
| 24.4 | 2639 | 1.2 | 59.36 | B123 | TBS132MA4 | 30000 | 9796 |

# 5.1 B/BA MOTORIDUTTORE (50Hz)



## 7.50 kW

| n2 [rpm] | M2 [Nm] | fs | i | Riduttore | Motore | Fr2 D-S-P [N] | Fr2 C [N] |
|---|---|---|---|---|---|---|---|
| 24.3 | 2557 | 1.0 | 119.60 | B123 | TBS132SB2 | 30000 | 9922 |
| 24.1 | 2704 | 1.9 | 40.29 | B143 | TP/TBP160M6 | 35068 | 35068 |
| 24.0 | 2690 | 3.0 | 60.92 | B153 | TH/TBH132MA4 | 65000 | 65000 |
| 24.0 | 2690 | 3.0 | 60.92 | B153 | TP/TBP132M4 | 65000 | 65000 |
| 23.9 | 2720 | 1.1 | 40.53 | B123 | TP/TBP160M6 | 30000 | 9779 |
| 23.8 | 2708 | 3.0 | 60.92 | B153 | TBS132MA4 | 65000 | 65000 |
| 23.8 | 2612 | 2.3 | 123.88 | B153 | TP/TBP132M2 | 65000 | 65000 |
| 23.7 | 2628 | 1.4 | 124.62 | B143 | TP/TBP132M2 | 35556 | 35556 |
| 23.7 | 2630 | 2.3 | 123.88 | B153 | TH/TBH132SB2 | 65000 | 65000 |
| 23.5 | 2646 | 1.4 | 124.62 | B143 | TH/TBH132SB2 | 35597 | 35597 |
| 23.5 | 2648 | 2.3 | 123.88 | B153 | TBS132SB2 | 65000 | 65000 |
| 23.4 | 2664 | 1.4 | 124.62 | B143 | TBS132SB2 | 35639 | 35639 |
| 23.3 | 2763 | 1.2 | 62.59 | B123 | TH/TBH132MA4 | 30000 | 9836 |
| 23.3 | 2763 | 1.2 | 62.59 | B123 | TP/TBP132M4 | 30000 | 9836 |
| 23.2 | 2782 | 1.2 | 62.59 | B123 | TBS132MA4 | 30000 | 9842 |
| 23.0 | 2802 | 2.9 | 63.47 | B153 | TH/TBH132MA4 | 65000 | 65000 |
| 23.0 | 2802 | 2.9 | 63.47 | B153 | TP/TBP132M4 | 65000 | 65000 |
| 22.9 | 2839 | 3.0 | 42.30 | B153 | TP/TBP160M6 | 65000 | 65000 |
| 22.8 | 2822 | 2.8 | 63.47 | B153 | TBS132MA4 | 65000 | 65000 |
| 22.5 | 2865 | 1.7 | 64.88 | B143 | TH/TBH132MA4 | 35541 | 35541 |
| 22.5 | 2865 | 1.7 | 64.88 | B143 | TP/TBP132M4 | 35541 | 35541 |
| 22.3 | 2884 | 1.7 | 64.88 | B143 | TBS132MA4 | 35580 | 35580 |
| 22.0 | 2964 | 1.7 | 44.16 | B143 | TP/TBP160M6 | 35582 | 35582 |
| 22.0 | 2831 | 2.1 | 134.27 | B153 | TP/TBP132M2 | 65000 | 65000 |
| 21.8 | 2851 | 2.1 | 134.27 | B153 | TH/TBH132SB2 | 65000 | 65000 |
| 21.7 | 2870 | 2.1 | 134.27 | B153 | TBS132SB2 | 65000 | 65000 |
| 21.6 | 3013 | 1.0 | 44.89 | B123 | TP/TBP160M6 | 30000 | 9853 |
| 21.6 | 2877 | 1.3 | 136.44 | B143 | TP/TBP132M2 | 36094 | 36094 |
| 21.5 | 2897 | 1.3 | 136.44 | B143 | TH/TBH132SB2 | 36134 | 36134 |
| 21.3 | 2917 | 1.3 | 136.44 | B143 | TBS132SB2 | 36173 | 36173 |
| 21.0 | 3066 | 1.1 | 69.43 | B123 | TH/TBH132MA4 | 30000 | 9909 |
| 21.0 | 3066 | 1.1 | 69.43 | B123 | TP/TBP132M4 | 30000 | 9909 |
| 20.9 | 3087 | 1.1 | 69.43 | B123 | TBS132MA4 | 30000 | 9912 |
| 20.7 | 3110 | 1.6 | 70.43 | B143 | TH/TBH132MA4 | 35986 | 35986 |
| 20.7 | 3110 | 1.6 | 70.43 | B143 | TP/TBP132M4 | 35986 | 35986 |
| 20.6 | 3131 | 1.6 | 70.43 | B143 | TBS132MA4 | 36022 | 36022 |
| 20.5 | 3141 | 2.5 | 71.15 | B153 | TH/TBH132MA4 | 65000 | 65000 |
| 20.5 | 3141 | 2.5 | 71.15 | B153 | TP/TBP132M4 | 65000 | 65000 |
| 20.4 | 3190 | 2.6 | 47.53 | B153 | TP/TBP160M6 | 65000 | 65000 |
| 20.4 | 3163 | 2.5 | 71.15 | B153 | TBS132MA4 | 65000 | 65000 |
| 20.1 | 3245 | 1.6 | 48.35 | B143 | TP/TBP160M6 | 36052 | 36052 |

# 5.1 B/BA MOTORIDUTTORE (50Hz)



## 7.50 kW

| n2 [rpm] | M2 [Nm] | fs | i | Riduttore | Motore | Fr2 D-S-P [N] | Fr2 C [N] |
|---|---|---|---|---|---|---|---|
| 19.8 | 3147 | 1.9 | 149.26 | B153 | TP/TBP132M2 | 65000 | 65000 |
| 19.7 | 3154 | 1.2 | 149.59 | B143 | TP/TBP132M2 | 36606 | 36606 |
| 19.6 | 3286 | 1.1 | 74.42 | B123 | TH/TBH132MA4 | 30000 | 9942 |
| 19.6 | 3286 | 1.1 | 74.42 | B123 | TP/TBP132M4 | 30000 | 9942 |
| 19.6 | 3176 | 1.2 | 149.59 | B143 | TH/TBH132SB2 | 36642 | 36642 |
| 19.6 | 3169 | 1.9 | 149.26 | B153 | TH/TBH132SB2 | 65000 | 65000 |
| 19.5 | 3343 | 1.0 | 49.80 | B123 | TP/TBP160M6 | 30000 | 9901 |
| 19.5 | 3308 | 1.1 | 74.42 | B123 | TBS132MA4 | 30000 | 9945 |
| 19.5 | 3198 | 1.2 | 149.59 | B143 | TBS132SB2 | 36678 | 36678 |
| 19.5 | 3191 | 1.9 | 149.26 | B153 | TBS132SB2 | 65000 | 65000 |
| 19.2 | 3394 | 2.5 | 50.56 | B153 | TP/TBP160M6 | 65000 | 65000 |
| 19.0 | 3423 | 4.0 | 51.00 | B163 | TP/TBP160M6 | 80000 | 65000 |
| 18.9 | 3405 | 1.5 | 77.12 | B143 | TH/TBH132MA4 | 36439 | 36439 |
| 18.9 | 3405 | 1.5 | 77.12 | B143 | TP/TBP132M4 | 36439 | 36439 |
| 18.9 | 3410 | 2.3 | 77.22 | B153 | TH/TBH132MA4 | 65000 | 65000 |
| 18.9 | 3410 | 2.3 | 77.22 | B153 | TP/TBP132M4 | 65000 | 65000 |
| 18.8 | 3428 | 1.5 | 77.12 | B143 | TBS132MA4 | 36472 | 36472 |
| 18.8 | 3433 | 2.3 | 77.22 | B153 | TBS132MA4 | 65000 | 65000 |
| 18.2 | 3534 | 1.0 | 80.04 | B123 | TH/TBH132MA4 | 30000 | 9963 |
| 18.2 | 3534 | 1.0 | 80.04 | B123 | TP/TBP132M4 | 30000 | 9963 |
| 18.2 | 3568 | 1.5 | 53.16 | B143 | TP/TBP160M6 | 36497 | 36497 |
| 18.1 | 3558 | 1.0 | 80.04 | B123 | TBS132MA4 | 30000 | 9964 |
| 18.1 | 3600 | 3.8 | 53.63 | B163 | TP/TBP160M6 | 80000 | 65000 |
| 17.9 | 3645 | 0.9 | 54.30 | B123 | TP/TBP160M6 | 30000 | 9918 |
| 17.8 | 3667 | 1.4 | 54.63 | B143 | TP/TBP160M6 | 36615 | 36615 |
| 17.8 | 3667 | 2.3 | 54.64 | B153 | TP/TBP160M6 | 65000 | 65000 |
| 17.8 | 3488 | 1.7 | 165.42 | B153 | TP/TBP132M2 | 65000 | 65000 |
| 17.7 | 3512 | 1.1 | 166.53 | B143 | TP/TBP132M2 | 37148 | 37148 |
| 17.7 | 3512 | 1.7 | 165.42 | B153 | TH/TBH132SB2 | 65000 | 65000 |
| 17.6 | 3536 | 1.1 | 166.53 | B143 | TH/TBH132SB2 | 37180 | 37180 |
| 17.6 | 3536 | 1.7 | 165.42 | B153 | TBS132SB2 | 65000 | 65000 |
| 17.5 | 3560 | 1.1 | 166.53 | B143 | TBS132SB2 | 37212 | 37212 |
| 17.4 | 3704 | 2.2 | 83.89 | B153 | TH/TBH132MA4 | 65000 | 65000 |
| 17.4 | 3704 | 2.2 | 83.89 | B153 | TP/TBP132M4 | 65000 | 65000 |
| 17.3 | 3729 | 2.1 | 83.89 | B153 | TBS132MA4 | 65000 | 65000 |
| 17.1 | 3777 | 1.3 | 85.54 | B143 | TH/TBH132MA4 | 36899 | 36899 |
| 17.1 | 3777 | 1.3 | 85.54 | B143 | TP/TBP132M4 | 36899 | 36899 |
| 17.0 | 3803 | 1.3 | 85.54 | B143 | TBS132MA4 | 36927 | 36927 |
| 16.9 | 3844 | 2.2 | 57.27 | B153 | TP/TBP160M6 | 65000 | 65000 |
| 16.7 | 3870 | 2.1 | 87.65 | B153 | TH/TBH132MA4 | 65000 | 65000 |
| 16.7 | 3870 | 2.1 | 87.65 | B153 | TP/TBP132M4 | 65000 | 65000 |

# 5.1 B/BA MOTORIDUTTORE (50Hz)



## 7.50 kW

| n2 [rpm] | M2 [Nm] | fs | i | Riduttore | Motore | Fr2 D-S-P [N] | Fr2 C [N] |
|---|---|---|---|---|---|---|---|
| 16.5 | 3897 | 2.1 | 87.65 | B153 | TBS132MA4 | 65000 | 65000 |
| 16.5 | 3958 | 3.4 | 58.97 | B163 | TP/TBP160M6 | 80000 | 65000 |
| 16.4 | 3961 | 1.3 | 59.02 | B143 | TP/TBP160M6 | 36924 | 36924 |
| 15.9 | 4089 | 2.1 | 60.92 | B153 | TP/TBP160M6 | 65000 | 65000 |
| 15.7 | 4108 | 1.9 | 93.05 | B153 | TH/TBH132MA4 | 65000 | 65000 |
| 15.7 | 4108 | 1.9 | 93.05 | B153 | TP/TBP132M4 | 65000 | 65000 |
| 15.6 | 4137 | 1.9 | 93.05 | B153 | TBS132MA4 | 65000 | 65000 |
| 15.5 | 4156 | 1.2 | 94.13 | B143 | TH/TBH132MA4 | 37259 | 37259 |
| 15.5 | 4156 | 1.2 | 94.13 | B143 | TP/TBP132M4 | 37259 | 37259 |
| 15.4 | 4185 | 1.2 | 94.13 | B143 | TBS132MA4 | 37282 | 37282 |
| 15.3 | 4260 | 2.0 | 63.47 | B153 | TP/TBP160M6 | 65000 | 65000 |
| 15.0 | 4355 | 1.2 | 64.88 | B143 | TP/TBP160M6 | 37242 | 37242 |
| 14.2 | 4553 | 1.8 | 103.12 | B153 | TH/TBH132MA4 | 65000 | 65000 |
| 14.2 | 4553 | 1.8 | 103.12 | B153 | TP/TBP132M4 | 65000 | 65000 |
| 14.1 | 4584 | 1.7 | 103.12 | B153 | TBS132MA4 | 65000 | 65000 |
| 13.9 | 4683 | 2.9 | 69.78 | B163 | TP/TBP160M6 | 80000 | 65000 |
| 13.8 | 4728 | 1.1 | 70.43 | B143 | TP/TBP160M6 | 37457 | 37457 |
| 13.8 | 4673 | 1.1 | 105.83 | B143 | TH/TBH132MA4 | 37603 | 37603 |
| 13.8 | 4673 | 1.1 | 105.83 | B143 | TP/TBP132M4 | 37603 | 37603 |
| 13.7 | 4705 | 1.1 | 105.83 | B143 | TBS132MA4 | 37619 | 37619 |
| 13.6 | 4775 | 1.8 | 71.15 | B153 | TP/TBP160M6 | 65000 | 65000 |
| 13.0 | 4942 | 1.0 | 111.94 | B143 | TH/TBH132MA4 | 37724 | 37724 |
| 13.0 | 4942 | 1.0 | 111.94 | B143 | TP/TBP132M4 | 37724 | 37724 |
| 13.0 | 4976 | 1.0 | 111.94 | B143 | TBS132MA4 | 37736 | 37736 |
| 12.6 | 5176 | 1.0 | 77.12 | B143 | TP/TBP160M6 | 37622 | 37622 |
| 12.6 | 5183 | 1.6 | 77.22 | B153 | TP/TBP160M6 | 65000 | 65000 |
| 12.6 | 5149 | 2.7 | 76.72 | B163 | TP/TBP160M6 | 80000 | 65000 |
| 11.8 | 5469 | 1.5 | 123.88 | B153 | TH/TBH132MA4 | 65000 | 65000 |
| 11.8 | 5469 | 1.5 | 123.88 | B153 | TP/TBP132M4 | 65000 | 65000 |
| 11.7 | 5502 | 0.9 | 124.62 | B143 | TH/TBH132MA4 | 37866 | 37866 |
| 11.7 | 5502 | 0.9 | 124.62 | B143 | TP/TBP132M4 | 37866 | 37866 |
| 11.7 | 5507 | 1.5 | 123.88 | B153 | TBS132MA4 | 65000 | 65000 |
| 11.6 | 5540 | 0.9 | 124.62 | B143 | TBS132MA4 | 37870 | 37870 |
| 11.6 | 5631 | 1.5 | 83.89 | B153 | TP/TBP160M6 | 65000 | 65000 |
| 11.3 | 5742 | 0.9 | 85.54 | B143 | TP/TBP160M6 | 37702 | 37702 |
| 11.1 | 5883 | 1.4 | 87.65 | B153 | TP/TBP160M6 | 65000 | 65000 |
| 11.1 | 5875 | 2.3 | 87.54 | B163 | TP/TBP160M6 | 80000 | 65000 |
| 10.9 | 5928 | 1.3 | 134.27 | B153 | TH/TBH132MA4 | 65000 | 65000 |
| 10.9 | 5928 | 1.3 | 134.27 | B153 | TP/TBP132M4 | 65000 | 65000 |
| 10.8 | 5969 | 1.3 | 134.27 | B153 | TBS132MA4 | 65000 | 65000 |
| 10.4 | 6245 | 1.3 | 93.05 | B153 | TP/TBP160M6 | 65000 | 65000 |

# 5.1 B/BA MOTORIDUTTORE (50Hz)



## 7.50 kW

| n2 [rpm] | M2 [Nm] | fs | i | Riduttore | Motore | Fr2 D-S-P [N] | Fr2 C [N] |
|---|---|---|---|---|---|---|---|
| 10.1 | 6460 | 2.1 | 96.25 | B163 | TP/TBP160M6 | 80000 | 65000 |
| 9.8 | 6590 | 1.2 | 149.26 | B153 | TH/TBH132MA4 | 65000 | 65000 |
| 9.8 | 6590 | 1.2 | 149.26 | B153 | TP/TBP132M4 | 65000 | 65000 |
| 9.7 | 6636 | 1.2 | 149.26 | B153 | TBS132MA4 | 65000 | 65000 |
| 9.4 | 6921 | 1.2 | 103.12 | B153 | TP/TBP160M6 | 65000 | 65000 |
| 9.3 | 6976 | 2.0 | 103.93 | B163 | TP/TBP160M6 | 80000 | 65000 |
| 8.8 | 7303 | 1.1 | 165.42 | B153 | TH/TBH132MA4 | 65000 | 65000 |
| 8.8 | 7303 | 1.1 | 165.42 | B153 | TP/TBP132M4 | 65000 | 65000 |
| 8.8 | 7354 | 1.1 | 165.42 | B153 | TBS132MA4 | 65000 | 65000 |
| 8.5 | 7670 | 1.8 | 114.27 | B163 | TP/TBP160M6 | 80000 | 65000 |
| 7.8 | 8315 | 1.0 | 123.88 | B153 | TP/TBP160M6 | 65000 | 65000 |
| 7.7 | 8476 | 1.6 | 126.29 | B163 | TP/TBP160M6 | 80000 | 65000 |
| 7.2 | 9012 | 0.9 | 134.27 | B153 | TP/TBP160M6 | 65000 | 65000 |
| 7.0 | 9320 | 1.5 | 138.85 | B163 | TP/TBP160M6 | 80000 | 65000 |
| 6.3 | 10392 | 1.3 | 154.83 | B163 | TP/TBP160M6 | 80000 | 65000 |

## 9.20 kW

| n2 [rpm] | M2 [Nm] | fs | i | Riduttore | Motore | Fr2 D-S-P [N] | Fr2 C [N] |
|---|---|---|---|---|---|---|---|
| 190.5 | 401 | 3.9 | 15.38 | B123 | TH/TBH132M2 | 21727 | 6208 |
| 189.2 | 403 | 3.9 | 15.38 | B123 | TBS132MA2 | 21768 | 6219 |
| 187.0 | 423 | 1.2 | 7.81 | B083 | TH/TBH132MB4 | 12099 | 3457 |
| 185.7 | 426 | 1.2 | 7.81 | B083 | TBS132MB4 | 12118 | 3462 |
| 183.3 | 431 | 3.5 | 7.97 | B123 | TH/TBH132MB4 | 21887 | 6253 |
| 182.0 | 434 | 3.5 | 7.97 | B123 | TBS132MB4 | 21927 | 6265 |
| 179.6 | 440 | 1.8 | 8.13 | B103 | TH/TBH132MB4 | 15667 | 4476 |
| 178.4 | 443 | 1.8 | 8.13 | B103 | TBS132MB4 | 15697 | 4485 |
| 169.7 | 450 | 2.3 | 17.27 | B103 | TH/TBH132M2 | 15962 | 4561 |
| 169.3 | 467 | 1.3 | 8.62 | B083 | TH/TBH132MB4 | 12379 | 3537 |
| 168.5 | 453 | 2.3 | 17.27 | B103 | TBS132MA2 | 15992 | 4569 |
| 168.2 | 470 | 1.3 | 8.62 | B083 | TBS132MB4 | 12399 | 3543 |
| 162.8 | 486 | 1.9 | 8.97 | B103 | TH/TBH132MB4 | 16095 | 4599 |
| 161.7 | 489 | 1.8 | 8.97 | B103 | TBS132MB4 | 16125 | 4607 |
| 157.7 | 484 | 3.4 | 18.58 | B123 | TH/TBH132M2 | 22859 | 6531 |
| 156.7 | 487 | 3.4 | 18.58 | B123 | TBS132MA2 | 22900 | 6543 |
| 153.8 | 496 | 2.1 | 19.06 | B103 | TH/TBH132M2 | 16398 | 4685 |
| 152.7 | 500 | 2.1 | 19.06 | B103 | TBS132MA2 | 16428 | 4694 |
| 151.8 | 521 | 3.5 | 9.62 | B123 | TH/TBH132MB4 | 23008 | 6574 |
| 150.7 | 525 | 3.4 | 9.62 | B123 | TBS132MB4 | 23049 | 6586 |
| 142.2 | 537 | 3.5 | 20.61 | B123 | TH/TBH132M2 | 23490 | 6711 |
| 141.3 | 560 | 3.6 | 10.33 | B123 | TH/TBH132MB4 | 23438 | 6697 |

# 5.1 B/BA MOTORIDUTTORE (50Hz)



## 9.20 kW

| n2 [rpm] | M2 [Nm] | fs | i | Riduttore | Motore | Fr2 D-S-P [N] | Fr2 C [N] |
|---|---|---|---|---|---|---|---|
| 141.2 | 540 | 3.5 | 20.61 | B123 | TBS132MA2 | 23531 | 6723 |
| 140.3 | 564 | 3.5 | 10.33 | B123 | TBS132MB4 | 23480 | 6708 |
| 139.1 | 568 | 1.1 | 10.49 | B083 | TH/TBH132MB4 | 12925 | 3693 |
| 138.2 | 572 | 1.1 | 10.49 | B083 | TBS132MB4 | 12944 | 3698 |
| 133.7 | 591 | 1.7 | 10.92 | B103 | TH/TBH132MB4 | 16966 | 4847 |
| 132.8 | 596 | 1.7 | 10.92 | B103 | TBS132MB4 | 16997 | 4856 |
| 128.6 | 593 | 3.5 | 22.78 | B123 | TH/TBH132M2 | 24102 | 6886 |
| 127.7 | 597 | 3.5 | 22.78 | B123 | TBS132MA2 | 24144 | 6898 |
| 126.0 | 628 | 1.2 | 11.59 | B083 | TH/TBH132MB4 | 13191 | 3769 |
| 125.1 | 632 | 1.2 | 11.59 | B083 | TBS132MB4 | 13210 | 3774 |
| 123.6 | 617 | 1.7 | 23.70 | B103 | TH/TBH132M2 | 17380 | 4966 |
| 122.8 | 621 | 1.7 | 23.70 | B103 | TBS132MA2 | 17411 | 4975 |
| 121.2 | 653 | 1.5 | 12.05 | B103 | TH/TBH132MB4 | 17406 | 4973 |
| 120.3 | 657 | 1.5 | 12.05 | B103 | TBS132MB4 | 17437 | 4982 |
| 117.0 | 676 | 3.0 | 12.48 | B123 | TH/TBH132MB4 | 24575 | 7021 |
| 116.2 | 681 | 2.9 | 12.48 | B123 | TBS132MB4 | 24616 | 7033 |
| 113.2 | 674 | 3.1 | 25.89 | B123 | TH/TBH132M2 | 24887 | 7111 |
| 112.4 | 679 | 3.1 | 25.89 | B123 | TBS132MA2 | 24929 | 7123 |
| 106.5 | 716 | 2.9 | 27.51 | B123 | TH/TBH132M2 | 25260 | 7217 |
| 105.8 | 721 | 2.9 | 27.51 | B123 | TBS132MA2 | 25302 | 7229 |
| 105.5 | 750 | 2.8 | 13.84 | B123 | TH/TBH132MB4 | 25200 | 7200 |
| 104.7 | 755 | 2.8 | 13.84 | B123 | TBS132MB4 | 25241 | 7212 |
| 101.2 | 781 | 1.0 | 14.43 | B083 | TH/TBH132MB4 | 13750 | 3928 |
| 100.8 | 785 | 4.0 | 14.49 | B143 | TH/TBH132MB4 | 24738 | 24738 |
| 100.5 | 787 | 1.0 | 14.43 | B083 | TBS132MB4 | 13766 | 3933 |
| 100.1 | 790 | 3.9 | 14.49 | B143 | TBS132MB4 | 24782 | 24782 |
| 97.4 | 812 | 1.5 | 14.99 | B103 | TH/TBH132MB4 | 18388 | 5254 |
| 96.8 | 817 | 1.5 | 14.99 | B103 | TBS132MB4 | 18418 | 5262 |
| 95.9 | 796 | 1.5 | 30.55 | B103 | TH/TBH132M2 | 18542 | 5298 |
| 95.2 | 801 | 1.5 | 30.55 | B103 | TBS132MA2 | 18573 | 5307 |
| 95.2 | 802 | 2.6 | 30.79 | B123 | TH/TBH132M2 | 25949 | 7414 |
| 94.9 | 833 | 2.5 | 15.38 | B123 | TH/TBH132MB4 | 25830 | 7380 |
| 94.5 | 807 | 2.6 | 30.79 | B123 | TBS132MA2 | 25991 | 7426 |
| 94.3 | 839 | 2.5 | 15.38 | B123 | TBS132MB4 | 25871 | 7392 |
| 93.7 | 814 | 2.6 | 31.26 | B123 | TH/TBH132M2 | 26041 | 7440 |
| 93.1 | 820 | 2.6 | 31.26 | B123 | TBS132MA2 | 26083 | 7452 |
| 88.6 | 861 | 1.5 | 33.07 | B103 | TH/TBH132M2 | 18904 | 5401 |
| 88.0 | 899 | 0.9 | 16.60 | B083 | TH/TBH132MB4 | 14074 | 4021 |
| 88.0 | 867 | 1.5 | 33.07 | B103 | TBS132MA2 | 18935 | 5410 |
| 87.4 | 905 | 0.9 | 16.60 | B083 | TBS132MB4 | 14089 | 4025 |
| 85.7 | 923 | 3.5 | 17.04 | B143 | TH/TBH132MB4 | 25797 | 25797 |

# 5.1 B/BA MOTORIDUTTORE (50Hz)



## 9.20 kW

| n2 [rpm] | M2 [Nm] | fs | i | Riduttore | Motore | Fr2 D-S-P [N] | Fr2 C [N] |
|---|---|---|---|---|---|---|---|
| 85.1 | 929 | 3.4 | 17.04 | B143 | TBS132MB4 | 25842 | 25842 |
| 84.5 | 935 | 1.5 | 17.27 | B103 | TH/TBH132MB4 | 19025 | 5436 |
| 84.5 | 903 | 2.3 | 34.68 | B123 | TH/TBH132M2 | 26670 | 7620 |
| 84.0 | 942 | 1.5 | 17.27 | B103 | TBS132MB4 | 19056 | 5445 |
| 83.9 | 909 | 2.3 | 34.68 | B123 | TBS132MA2 | 26711 | 7632 |
| 81.7 | 934 | 1.4 | 35.87 | B103 | TH/TBH132M2 | 19276 | 5507 |
| 81.1 | 941 | 1.4 | 35.87 | B103 | TBS132MA2 | 19307 | 5516 |
| 79.9 | 955 | 3.8 | 36.67 | B143 | TH/TBH132M2 | 26365 | 26365 |
| 79.4 | 962 | 3.7 | 36.67 | B143 | TBS132MA2 | 26410 | 26410 |
| 78.6 | 1006 | 2.2 | 18.58 | B123 | TH/TBH132MB4 | 26940 | 7697 |
| 78.3 | 1010 | 3.6 | 18.66 | B143 | TH/TBH132MB4 | 26390 | 26390 |
| 78.1 | 1013 | 2.2 | 18.58 | B123 | TBS132MB4 | 26980 | 7709 |
| 77.7 | 1017 | 3.5 | 18.66 | B143 | TBS132MB4 | 26435 | 26435 |
| 76.6 | 1032 | 1.4 | 19.06 | B103 | TH/TBH132MB4 | 19464 | 5561 |
| 76.1 | 1039 | 1.3 | 19.06 | B103 | TBS132MB4 | 19494 | 5570 |
| 72.7 | 1049 | 3.4 | 40.29 | B143 | TH/TBH132M2 | 26991 | 26991 |
| 72.3 | 1056 | 2.0 | 40.53 | B123 | TH/TBH132M2 | 27596 | 7885 |
| 72.2 | 1056 | 3.4 | 40.29 | B143 | TBS132MA2 | 27037 | 27037 |
| 71.8 | 1063 | 2.0 | 40.53 | B123 | TBS132MA2 | 27636 | 7896 |
| 71.2 | 1071 | 1.2 | 41.12 | B103 | TH/TBH132M2 | 19896 | 5685 |
| 70.8 | 1078 | 1.2 | 41.12 | B103 | TBS132MA2 | 19927 | 5693 |
| 70.8 | 1116 | 2.2 | 20.61 | B123 | TH/TBH132MB4 | 27534 | 7867 |
| 70.4 | 1124 | 2.2 | 20.61 | B123 | TBS132MB4 | 27573 | 7878 |
| 69.5 | 1137 | 3.5 | 21.00 | B143 | TH/TBH132MB4 | 27163 | 27163 |
| 69.1 | 1145 | 3.5 | 21.00 | B143 | TBS132MB4 | 27208 | 27208 |
| 66.3 | 1150 | 3.1 | 44.16 | B143 | TH/TBH132M2 | 27602 | 27602 |
| 65.9 | 1158 | 3.1 | 44.16 | B143 | TBS132MA2 | 27648 | 27648 |
| 65.7 | 1162 | 1.1 | 44.61 | B103 | TH/TBH132M2 | 20260 | 5789 |
| 65.3 | 1169 | 1.9 | 44.89 | B123 | TH/TBH132M2 | 28187 | 8053 |
| 65.2 | 1170 | 1.1 | 44.61 | B103 | TBS132MA2 | 20290 | 5797 |
| 64.8 | 1177 | 1.9 | 44.89 | B123 | TBS132MA2 | 28226 | 8064 |
| 64.1 | 1234 | 2.3 | 22.78 | B123 | TH/TBH132MB4 | 28092 | 8026 |
| 64.1 | 1233 | 3.6 | 22.77 | B143 | TH/TBH132MB4 | 27692 | 27692 |
| 63.7 | 1242 | 2.3 | 22.78 | B123 | TBS132MB4 | 28129 | 8037 |
| 63.7 | 1242 | 3.5 | 22.77 | B143 | TBS132MB4 | 27737 | 27737 |
| 62.0 | 1231 | 1.0 | 47.28 | B103 | TH/TBH132M2 | 20518 | 5862 |
| 61.6 | 1284 | 1.1 | 23.70 | B103 | TH/TBH132MB4 | 20414 | 5833 |
| 61.5 | 1240 | 1.0 | 47.28 | B103 | TBS132MA2 | 20548 | 5871 |
| 61.2 | 1292 | 1.1 | 23.70 | B103 | TBS132MB4 | 20443 | 5841 |
| 60.6 | 1259 | 3.0 | 48.35 | B143 | TH/TBH132M2 | 28204 | 28204 |
| 60.2 | 1268 | 3.0 | 48.35 | B143 | TBS132MA2 | 28249 | 28249 |

# 5.1 B/BA MOTORIDUTTORE (50Hz)



## 9.20 kW

| n2 [rpm] | M2 [Nm] | fs | i | Riduttore | Motore | Fr2 D-S-P [N] | Fr2 C [N] |
|---|---|---|---|---|---|---|---|
| 58.8 | 1297 | 1.9 | 49.80 | B123 | TH/TBH132M2 | 28769 | 8220 |
| 58.4 | 1306 | 1.8 | 49.80 | B123 | TBS132MA2 | 28806 | 8230 |
| 57.0 | 1388 | 3.3 | 25.63 | B143 | TH/TBH132MB4 | 28456 | 28456 |
| 56.6 | 1398 | 3.3 | 25.63 | B143 | TBS132MB4 | 28500 | 28500 |
| 56.4 | 1402 | 2.0 | 25.89 | B123 | TH/TBH132MB4 | 28774 | 8221 |
| 56.0 | 1412 | 2.0 | 25.89 | B123 | TBS132MB4 | 28809 | 8231 |
| 55.1 | 1436 | 1.0 | 26.51 | B103 | TH/TBH132MB4 | 20885 | 5967 |
| 55.1 | 1384 | 2.7 | 53.16 | B143 | TH/TBH132M2 | 28828 | 28828 |
| 54.7 | 1446 | 1.0 | 26.51 | B103 | TBS132MB4 | 20914 | 5975 |
| 54.7 | 1394 | 2.7 | 53.16 | B143 | TBS132MA2 | 28873 | 28873 |
| 54.0 | 1414 | 1.7 | 54.30 | B123 | TH/TBH132M2 | 29235 | 8353 |
| 53.6 | 1424 | 1.7 | 54.30 | B123 | TBS132MA2 | 29271 | 8363 |
| 53.6 | 1423 | 2.6 | 54.63 | B143 | TH/TBH132M2 | 29006 | 29006 |
| 53.3 | 1432 | 2.6 | 54.63 | B143 | TBS132MA2 | 29051 | 29051 |
| 53.2 | 1486 | 3.1 | 27.44 | B143 | TH/TBH132MB4 | 28893 | 28893 |
| 53.1 | 1490 | 1.9 | 27.51 | B123 | TH/TBH132MB4 | 29083 | 8309 |
| 52.8 | 1497 | 3.1 | 27.44 | B143 | TBS132MB4 | 28937 | 28937 |
| 52.7 | 1500 | 1.9 | 27.51 | B123 | TBS132MB4 | 29117 | 8319 |
| 50.8 | 1502 | 4.0 | 57.27 | B153 | TBS132MA2 | 51785 | 51785 |
| 49.6 | 1537 | 2.4 | 59.02 | B143 | TH/TBH132M2 | 29508 | 29508 |
| 49.4 | 1546 | 1.6 | 59.36 | B123 | TH/TBH132M2 | 29696 | 8484 |
| 49.3 | 1548 | 2.4 | 59.02 | B143 | TBS132MA2 | 29552 | 29552 |
| 49.0 | 1556 | 1.5 | 59.36 | B123 | TBS132MA2 | 29730 | 8494 |
| 48.6 | 1627 | 2.9 | 30.05 | B143 | TH/TBH132MB4 | 29465 | 29465 |
| 48.3 | 1639 | 2.9 | 30.05 | B143 | TBS132MB4 | 29508 | 29508 |
| 48.1 | 1587 | 3.8 | 60.92 | B153 | TH/TBH132M2 | 52648 | 52648 |
| 47.8 | 1655 | 1.0 | 30.55 | B103 | TH/TBH132MB4 | 21455 | 6130 |
| 47.8 | 1598 | 3.8 | 60.92 | B153 | TBS132MA2 | 52757 | 52757 |
| 47.5 | 1666 | 1.0 | 30.55 | B103 | TBS132MB4 | 21481 | 6138 |
| 47.4 | 1668 | 1.7 | 30.79 | B123 | TH/TBH132MB4 | 29628 | 8465 |
| 47.1 | 1679 | 1.7 | 30.79 | B123 | TBS132MB4 | 29660 | 8474 |
| 46.8 | 1630 | 1.5 | 62.59 | B123 | TH/TBH132M2 | 29958 | 8559 |
| 46.7 | 1693 | 1.7 | 31.26 | B123 | TH/TBH132MB4 | 29698 | 8485 |
| 46.5 | 1641 | 1.5 | 62.59 | B123 | TBS132MA2 | 29991 | 8569 |
| 46.4 | 1705 | 1.6 | 31.26 | B123 | TBS132MB4 | 29729 | 8494 |
| 46.2 | 1653 | 3.6 | 63.47 | B153 | TH/TBH132M2 | 53299 | 53299 |
| 45.8 | 1664 | 3.6 | 63.47 | B153 | TBS132MA2 | 53409 | 53409 |
| 45.2 | 1690 | 2.2 | 64.88 | B143 | TH/TBH132M2 | 30114 | 30114 |
| 44.9 | 1701 | 2.2 | 64.88 | B143 | TBS132MA2 | 30157 | 30157 |
| 44.2 | 1791 | 0.9 | 33.07 | B103 | TH/TBH132MB4 | 21756 | 6216 |
| 44.2 | 1788 | 2.6 | 33.01 | B143 | TH/TBH132MB4 | 30046 | 30046 |

# 5.1 B/BA MOTORIDUTTORE (50Hz)



## 9.20 kW

| n2 [rpm] | M2 [Nm] | fs | i | Riduttore | Motore | Fr2 D-S-P [N] | Fr2 C [N] |
|---|---|---|---|---|---|---|---|
| 43.9 | 1803 | 0.9 | 33.07 | B103 | TBS132MB4 | 21782 | 6223 |
| 43.9 | 1800 | 2.6 | 33.01 | B143 | TBS132MB4 | 30087 | 30087 |
| 42.2 | 1808 | 1.4 | 69.43 | B123 | TH/TBH132M2 | 30000 | 8698 |
| 42.1 | 1878 | 1.5 | 34.68 | B123 | TH/TBH132MB4 | 30000 | 8615 |
| 41.9 | 1821 | 1.4 | 69.43 | B123 | TBS132MA2 | 30000 | 8707 |
| 41.8 | 1891 | 1.5 | 34.68 | B123 | TBS132MB4 | 30000 | 8623 |
| 41.6 | 1834 | 2.0 | 70.43 | B143 | TH/TBH132M2 | 30628 | 30628 |
| 41.3 | 1847 | 2.0 | 70.43 | B143 | TBS132MA2 | 30670 | 30670 |
| 41.2 | 1853 | 3.2 | 71.15 | B153 | TH/TBH132M2 | 55145 | 55145 |
| 40.9 | 1866 | 3.2 | 71.15 | B153 | TBS132MA2 | 55257 | 55257 |
| 39.8 | 1986 | 2.4 | 36.67 | B143 | TH/TBH132MB4 | 30676 | 30676 |
| 39.5 | 2000 | 2.4 | 36.67 | B143 | TBS132MB4 | 30716 | 30716 |
| 39.4 | 1938 | 1.4 | 74.42 | B123 | TH/TBH132M2 | 30000 | 8784 |
| 39.1 | 1951 | 1.3 | 74.42 | B123 | TBS132MA2 | 30000 | 8792 |
| 38.0 | 2008 | 1.9 | 77.12 | B143 | TH/TBH132M2 | 31180 | 31180 |
| 37.9 | 2011 | 3.0 | 77.22 | B153 | TH/TBH132M2 | 56499 | 56499 |
| 37.7 | 2022 | 1.9 | 77.12 | B143 | TBS132MA2 | 31221 | 31221 |
| 37.7 | 2025 | 3.0 | 77.22 | B153 | TBS132MA2 | 56613 | 56613 |
| 36.6 | 2084 | 1.3 | 80.04 | B123 | TH/TBH132M2 | 30000 | 8867 |
| 36.4 | 2099 | 1.3 | 80.04 | B123 | TBS132MA2 | 30000 | 8875 |
| 36.2 | 2182 | 2.2 | 40.29 | B143 | TH/TBH132MB4 | 31218 | 31218 |
| 36.0 | 2195 | 1.3 | 40.53 | B123 | TH/TBH132MB4 | 30000 | 8784 |
| 36.0 | 2197 | 2.2 | 40.29 | B143 | TBS132MB4 | 31257 | 31257 |
| 35.8 | 2210 | 1.3 | 40.53 | B123 | TBS132MB4 | 30000 | 8790 |
| 34.9 | 2185 | 2.7 | 83.89 | B153 | TH/TBH132M2 | 57891 | 57891 |
| 34.7 | 2200 | 2.7 | 83.89 | B153 | TBS132MA2 | 58007 | 58007 |
| 34.5 | 2291 | 3.5 | 42.30 | B153 | TH/TBH132MB4 | 57973 | 57973 |
| 34.3 | 2228 | 1.7 | 85.54 | B143 | TH/TBH132M2 | 31789 | 31789 |
| 34.3 | 2307 | 3.5 | 42.30 | B153 | TBS132MB4 | 58089 | 58089 |
| 34.0 | 2243 | 1.7 | 85.54 | B143 | TBS132MA2 | 31828 | 31828 |
| 33.4 | 2283 | 2.6 | 87.65 | B153 | TH/TBH132M2 | 58639 | 58639 |
| 33.2 | 2298 | 2.6 | 87.65 | B153 | TBS132MA2 | 58756 | 58756 |
| 33.1 | 2392 | 2.0 | 44.16 | B143 | TH/TBH132MB4 | 31723 | 31723 |
| 32.8 | 2408 | 2.0 | 44.16 | B143 | TBS132MB4 | 31759 | 31759 |
| 32.6 | 2340 | 1.1 | 89.87 | B123 | TH/TBH132M2 | 30000 | 8983 |
| 32.5 | 2431 | 1.2 | 44.89 | B123 | TH/TBH132MB4 | 30000 | 8874 |
| 32.4 | 2356 | 1.1 | 89.87 | B123 | TBS132MA2 | 30000 | 8989 |
| 32.3 | 2448 | 1.2 | 44.89 | B123 | TBS132MB4 | 30000 | 8879 |
| 31.5 | 2423 | 2.5 | 93.05 | B153 | TH/TBH132M2 | 59667 | 59667 |
| 31.3 | 2440 | 2.5 | 93.05 | B153 | TBS132MA2 | 59785 | 59785 |
| 31.1 | 2451 | 1.5 | 94.13 | B143 | TH/TBH132M2 | 32323 | 32323 |

# 5.1 B/BA MOTORIDUTTORE (50Hz)



## 9.20 kW

| n2 [rpm] | M2 [Nm] | fs | i | Riduttore | Motore | Fr2 D-S-P [N] | Fr2 C [N] |
|---|---|---|---|---|---|---|---|
| 30.9 | 2468 | 1.5 | 94.13 | B143 | TBS132MA2 | 32360 | 32360 |
| 30.7 | 2574 | 3.1 | 47.53 | B153 | TH/TBH132MB4 | 59966 | 59966 |
| 30.5 | 2592 | 3.1 | 47.53 | B153 | TBS132MB4 | 60085 | 60085 |
| 30.2 | 2619 | 1.9 | 48.35 | B143 | TH/TBH132MB4 | 32194 | 32194 |
| 30.0 | 2637 | 1.9 | 48.35 | B143 | TBS132MB4 | 32228 | 32228 |
| 29.4 | 2596 | 1.0 | 99.70 | B123 | TH/TBH132M2 | 30000 | 9067 |
| 29.3 | 2697 | 1.2 | 49.80 | B123 | TH/TBH132MB4 | 30000 | 8945 |
| 29.2 | 2614 | 1.0 | 99.70 | B123 | TBS132MA2 | 30000 | 9072 |
| 29.1 | 2716 | 1.2 | 49.80 | B123 | TBS132MB4 | 30000 | 8949 |
| 28.9 | 2738 | 2.9 | 50.56 | B153 | TH/TBH132MB4 | 61038 | 61038 |
| 28.7 | 2757 | 2.9 | 50.56 | B153 | TBS132MB4 | 61158 | 61158 |
| 28.4 | 2685 | 2.2 | 103.12 | B153 | TH/TBH132M2 | 61462 | 61462 |
| 28.2 | 2704 | 2.2 | 103.12 | B153 | TBS132MA2 | 61583 | 61583 |
| 27.7 | 2756 | 1.4 | 105.83 | B143 | TH/TBH132M2 | 32933 | 32933 |
| 27.5 | 2775 | 1.4 | 105.83 | B143 | TBS132MA2 | 32967 | 32967 |
| 27.5 | 2879 | 1.7 | 53.16 | B143 | TH/TBH132MB4 | 32651 | 32651 |
| 27.3 | 2899 | 1.7 | 53.16 | B143 | TBS132MB4 | 32683 | 32683 |
| 26.9 | 2941 | 1.1 | 54.30 | B123 | TH/TBH132MB4 | 30000 | 8987 |
| 26.7 | 2961 | 1.1 | 54.30 | B123 | TBS132MB4 | 30000 | 8989 |
| 26.7 | 2959 | 1.7 | 54.63 | B143 | TH/TBH132MB4 | 32776 | 32776 |
| 26.7 | 2959 | 2.7 | 54.64 | B153 | TH/TBH132MB4 | 62401 | 62401 |
| 26.5 | 2979 | 1.7 | 54.63 | B143 | TBS132MB4 | 32806 | 32806 |
| 26.5 | 2980 | 2.7 | 54.64 | B153 | TBS132MB4 | 62523 | 62523 |
| 26.2 | 2915 | 1.3 | 111.94 | B143 | TH/TBH132M2 | 33206 | 33206 |
| 26.0 | 2935 | 1.3 | 111.94 | B143 | TBS132MA2 | 33238 | 33238 |
| 25.5 | 3102 | 2.6 | 57.27 | B153 | TH/TBH132MB4 | 63237 | 63237 |
| 25.3 | 3123 | 2.6 | 57.27 | B153 | TBS132MB4 | 63359 | 63359 |
| 24.7 | 3196 | 1.6 | 59.02 | B143 | TH/TBH132MB4 | 33108 | 33108 |
| 24.6 | 3215 | 1.0 | 59.36 | B123 | TH/TBH132MB4 | 30000 | 9010 |
| 24.6 | 3218 | 1.6 | 59.02 | B143 | TBS132MB4 | 33136 | 33136 |
| 24.4 | 3237 | 1.0 | 59.36 | B123 | TBS132MB4 | 30000 | 9011 |
| 24.0 | 3300 | 2.4 | 60.92 | B153 | TH/TBH132MB4 | 64343 | 64343 |
| 23.8 | 3322 | 2.4 | 60.92 | B153 | TBS132MB4 | 64467 | 64467 |
| 23.7 | 3226 | 1.9 | 123.88 | B153 | TH/TBH132M2 | 64751 | 64751 |
| 23.5 | 3245 | 1.2 | 124.62 | B143 | TH/TBH132M2 | 33684 | 33684 |
| 23.5 | 3248 | 1.8 | 123.88 | B153 | TBS132MA2 | 64875 | 64875 |
| 23.4 | 3268 | 1.1 | 124.62 | B143 | TBS132MA2 | 33713 | 33713 |
| 23.3 | 3390 | 1.0 | 62.59 | B123 | TH/TBH132MB4 | 30000 | 9014 |
| 23.2 | 3413 | 1.0 | 62.59 | B123 | TBS132MB4 | 30000 | 9014 |
| 23.0 | 3438 | 2.3 | 63.47 | B153 | TH/TBH132MB4 | 65000 | 65000 |
| 22.8 | 3461 | 2.3 | 63.47 | B153 | TBS132MB4 | 65000 | 65000 |

# 5.1 B/BA MOTORIDUTTORE (50Hz)



## 9.20 kW

| n2 [rpm] | M2 [Nm] | fs | i | Riduttore | Motore | Fr2 D-S-P [N] | Fr2 C [N] |
|---|---|---|---|---|---|---|---|
| 22.5 | 3514 | 1.4 | 64.88 | B143 | TH/TBH132MB4 | 33470 | 33470 |
| 22.3 | 3538 | 1.4 | 64.88 | B143 | TBS132MB4 | 33494 | 33494 |
| 21.8 | 3497 | 1.7 | 134.27 | B153 | TH/TBH132M2 | 65000 | 65000 |
| 21.7 | 3521 | 1.7 | 134.27 | B153 | TBS132MA2 | 65000 | 65000 |
| 21.5 | 3553 | 1.1 | 136.44 | B143 | TH/TBH132M2 | 34039 | 34039 |
| 21.3 | 3578 | 1.0 | 136.44 | B143 | TBS132MA2 | 34064 | 34064 |
| 20.7 | 3815 | 1.3 | 70.43 | B143 | TH/TBH132MB4 | 33738 | 33738 |
| 20.6 | 3841 | 1.3 | 70.43 | B143 | TBS132MB4 | 33758 | 33758 |
| 20.5 | 3853 | 2.1 | 71.15 | B153 | TH/TBH132MB4 | 65000 | 65000 |
| 20.4 | 3880 | 2.1 | 71.15 | B153 | TBS132MB4 | 65000 | 65000 |
| 19.6 | 3887 | 1.5 | 149.26 | B153 | TH/TBH132M2 | 65000 | 65000 |
| 19.5 | 3914 | 1.5 | 149.26 | B153 | TBS132MA2 | 65000 | 65000 |
| 18.9 | 4177 | 1.2 | 77.12 | B143 | TH/TBH132MB4 | 33977 | 33977 |
| 18.9 | 4182 | 1.9 | 77.22 | B153 | TH/TBH132MB4 | 65000 | 65000 |
| 18.8 | 4205 | 1.2 | 77.12 | B143 | TBS132MB4 | 33993 | 33993 |
| 18.8 | 4211 | 1.9 | 77.22 | B153 | TBS132MB4 | 65000 | 65000 |
| 17.7 | 4308 | 1.4 | 165.42 | B153 | TH/TBH132M2 | 65000 | 65000 |
| 17.6 | 4338 | 1.4 | 165.42 | B153 | TBS132MA2 | 65000 | 65000 |
| 17.4 | 4543 | 1.8 | 83.89 | B153 | TH/TBH132MB4 | 65000 | 65000 |
| 17.3 | 4575 | 1.7 | 83.89 | B153 | TBS132MB4 | 65000 | 65000 |
| 17.1 | 4633 | 1.1 | 85.54 | B143 | TH/TBH132MB4 | 34168 | 34168 |
| 17.0 | 4665 | 1.1 | 85.54 | B143 | TBS132MB4 | 34177 | 34177 |
| 16.7 | 4747 | 1.7 | 87.65 | B153 | TH/TBH132MB4 | 65000 | 65000 |
| 16.5 | 4780 | 1.7 | 87.65 | B153 | TBS132MB4 | 65000 | 65000 |
| 15.7 | 5039 | 1.6 | 93.05 | B153 | TH/TBH132MB4 | 65000 | 65000 |
| 15.6 | 5074 | 1.6 | 93.05 | B153 | TBS132MB4 | 65000 | 65000 |
| 15.5 | 5098 | 1.0 | 94.13 | B143 | TH/TBH132MB4 | 34254 | 34254 |
| 15.4 | 5133 | 1.0 | 94.13 | B143 | TBS132MB4 | 34256 | 34256 |
| 14.2 | 5585 | 1.4 | 103.12 | B153 | TH/TBH132MB4 | 65000 | 65000 |
| 14.1 | 5623 | 1.4 | 103.12 | B153 | TBS132MB4 | 65000 | 65000 |
| 11.8 | 6709 | 1.2 | 123.88 | B153 | TH/TBH132MB4 | 65000 | 65000 |
| 11.7 | 6755 | 1.2 | 123.88 | B153 | TBS132MB4 | 65000 | 65000 |
| 10.9 | 7272 | 1.1 | 134.27 | B153 | TH/TBH132MB4 | 65000 | 65000 |
| 10.8 | 7322 | 1.1 | 134.27 | B153 | TBS132MB4 | 65000 | 65000 |
| 9.8 | 8084 | 1.0 | 149.26 | B153 | TH/TBH132MB4 | 65000 | 65000 |
| 9.7 | 8140 | 1.0 | 149.26 | B153 | TBS132MB4 | 65000 | 65000 |

## 11.00 kW

| n2 [rpm] | M2 [Nm] | fs | i | Riduttore | Motore | Fr2 D-S-P [N] | Fr2 C [N] |
|---|---|---|---|---|---|---|---|
| 233.2 | 391 | 3.8 | 12.48 | B123 | TBS132MB2 | 20248 | 5785 |

# 5.1 B/BA MOTORIDUTTORE (50Hz)



## 11.00 kW

| n2 [rpm] | M2 [Nm] | fs | i | Riduttore | Motore | Fr2 D-S-P [N] | Fr2 C [N] |
|---|---|---|---|---|---|---|---|
| 210.2 | 434 | 3.6 | 13.84 | B123 | TBS132MB2 | 20820 | 5949 |
| 189.2 | 482 | 3.3 | 15.38 | B123 | TBS132MB2 | 21405 | 6116 |
| 185.2 | 511 | 2.9 | 7.97 | B123 | TP/TBP160MA4 | 21443 | 6126 |
| 184.4 | 513 | 1.0 | 7.81 | B083 | TBS132MC4 | 11798 | 3371 |
| 181.5 | 521 | 1.5 | 8.13 | B103 | TP/TBP160MA4 | 15378 | 4394 |
| 180.8 | 523 | 2.9 | 7.97 | B123 | TBS132MC4 | 21575 | 6164 |
| 180.8 | 523 | 2.9 | 7.97 | B123 | TBS160S4 | 21575 | 6164 |
| 177.2 | 534 | 1.5 | 8.13 | B103 | TBS132MC4 | 15475 | 4422 |
| 177.2 | 534 | 1.5 | 8.13 | B103 | TBS160S4 | 15475 | 4422 |
| 167.0 | 566 | 1.1 | 8.62 | B083 | TBS132MC4 | 12044 | 3441 |
| 164.5 | 575 | 1.6 | 8.97 | B103 | TP/TBP160MA4 | 15780 | 4508 |
| 160.6 | 589 | 1.5 | 8.97 | B103 | TBS132MC4 | 15878 | 4537 |
| 160.6 | 589 | 1.5 | 8.97 | B103 | TBS160S4 | 15878 | 4537 |
| 156.7 | 582 | 2.8 | 18.58 | B123 | TBS132MB2 | 22462 | 6418 |
| 153.3 | 617 | 2.9 | 9.62 | B123 | TP/TBP160MA4 | 22483 | 6424 |
| 149.7 | 632 | 2.8 | 9.62 | B123 | TBS132MC4 | 22616 | 6462 |
| 149.7 | 632 | 2.8 | 9.62 | B123 | TBS160S4 | 22616 | 6462 |
| 142.7 | 662 | 3.0 | 10.33 | B123 | TP/TBP160MA4 | 22879 | 6537 |
| 141.2 | 646 | 2.9 | 20.61 | B123 | TBS132MB2 | 23045 | 6584 |
| 139.3 | 678 | 2.9 | 10.33 | B123 | TBS132MC4 | 23011 | 6575 |
| 139.3 | 678 | 2.9 | 10.33 | B123 | TBS160S4 | 23011 | 6575 |
| 137.2 | 689 | 0.9 | 10.49 | B083 | TBS132MC4 | 12506 | 3573 |
| 135.1 | 700 | 1.4 | 10.92 | B103 | TP/TBP160MA4 | 16591 | 4740 |
| 131.9 | 717 | 1.4 | 10.92 | B103 | TBS132MC4 | 16690 | 4769 |
| 131.9 | 717 | 1.4 | 10.92 | B103 | TBS160S4 | 16690 | 4769 |
| 127.7 | 714 | 2.9 | 22.78 | B123 | TBS132MB2 | 23607 | 6745 |
| 124.3 | 761 | 1.0 | 11.59 | B083 | TBS132MC4 | 12724 | 3635 |
| 122.4 | 772 | 1.3 | 12.05 | B103 | TP/TBP160MA4 | 16997 | 4856 |
| 121.8 | 784 | 2.0 | 7.97 | B123 | TP/TBP160L6 | 23714 | 6775 |
| 121.3 | 779 | 4.0 | 11.87 | B143 | TBS132MC4 | 23137 | 23137 |
| 121.3 | 779 | 4.0 | 11.87 | B143 | TBS160S4 | 23137 | 23137 |
| 119.5 | 791 | 1.3 | 12.05 | B103 | TBS132MC4 | 17096 | 4885 |
| 119.5 | 791 | 1.3 | 12.05 | B103 | TBS160S4 | 17096 | 4885 |
| 119.4 | 800 | 1.0 | 8.13 | B103 | TP/TBP160L6 | 17078 | 4879 |
| 118.2 | 800 | 2.5 | 12.48 | B123 | TP/TBP160MA4 | 23911 | 6832 |
| 115.4 | 819 | 2.4 | 12.48 | B123 | TBS132MC4 | 24042 | 6869 |
| 115.4 | 819 | 2.4 | 12.48 | B123 | TBS160S4 | 24042 | 6869 |
| 112.4 | 812 | 2.6 | 25.89 | B123 | TBS132MB2 | 24319 | 6948 |
| 108.2 | 883 | 1.1 | 8.97 | B103 | TP/TBP160L6 | 17480 | 4994 |
| 106.5 | 887 | 2.4 | 13.84 | B123 | TP/TBP160MA4 | 24471 | 6992 |
| 105.8 | 863 | 2.4 | 27.51 | B123 | TBS132MB2 | 24653 | 7044 |

# 5.1 B/BA MOTORIDUTTORE (50Hz)



## 11.00 kW

| n2 [rpm] | M2 [Nm] | fs | i | Riduttore | Motore | Fr2 D-S-P [N] | Fr2 C [N] |
|---|---|---|---|---|---|---|---|
| 104.0 | 909 | 2.3 | 13.84 | B123 | TBS132MC4 | 24599 | 7028 |
| 104.0 | 909 | 2.3 | 13.84 | B123 | TBS160S4 | 24599 | 7028 |
| 101.8 | 928 | 3.3 | 14.49 | B143 | TP/TBP160MA4 | 24187 | 24187 |
| 100.8 | 947 | 2.0 | 9.62 | B123 | TP/TBP160L6 | 24720 | 7063 |
| 99.4 | 951 | 3.3 | 14.49 | B143 | TBS132MC4 | 24331 | 24331 |
| 99.4 | 951 | 3.3 | 14.49 | B143 | TBS160S4 | 24331 | 24331 |
| 98.4 | 961 | 1.2 | 14.99 | B103 | TP/TBP160MA4 | 17890 | 5111 |
| 96.9 | 942 | 3.7 | 30.05 | B143 | TBS132MB2 | 24596 | 24596 |
| 96.1 | 984 | 1.2 | 14.99 | B103 | TBS132MC4 | 17987 | 5139 |
| 96.1 | 984 | 1.2 | 14.99 | B103 | TBS160S4 | 17987 | 5139 |
| 95.9 | 986 | 2.1 | 15.38 | B123 | TP/TBP160MA4 | 25027 | 7151 |
| 94.5 | 965 | 2.2 | 30.79 | B123 | TBS132MB2 | 25264 | 7218 |
| 93.9 | 1017 | 2.1 | 10.33 | B123 | TP/TBP160L6 | 25092 | 7169 |
| 93.6 | 1010 | 2.1 | 15.38 | B123 | TBS132MC4 | 25153 | 7186 |
| 93.6 | 1010 | 2.1 | 15.38 | B123 | TBS160S4 | 25153 | 7186 |
| 93.1 | 980 | 2.1 | 31.26 | B123 | TBS132MB2 | 25346 | 7242 |
| 89.5 | 1067 | 3.0 | 10.84 | B143 | TP/TBP160L6 | 24927 | 24927 |
| 88.8 | 1075 | 1.0 | 10.92 | B103 | TP/TBP160L6 | 18272 | 5221 |
| 88.2 | 1035 | 3.4 | 33.01 | B143 | TBS132MB2 | 25170 | 25170 |
| 86.6 | 1092 | 2.9 | 17.04 | B143 | TP/TBP160MA4 | 25160 | 25160 |
| 85.4 | 1107 | 1.3 | 17.27 | B103 | TP/TBP160MA4 | 18458 | 5274 |
| 84.5 | 1119 | 2.9 | 17.04 | B143 | TBS132MC4 | 25303 | 25303 |
| 84.5 | 1119 | 2.9 | 17.04 | B143 | TBS160S4 | 25303 | 25303 |
| 83.9 | 1087 | 1.9 | 34.68 | B123 | TBS132MB2 | 25893 | 7398 |
| 83.4 | 1134 | 1.2 | 17.27 | B103 | TBS132MC4 | 18553 | 5301 |
| 83.4 | 1134 | 1.2 | 17.27 | B103 | TBS160S4 | 18553 | 5301 |
| 81.7 | 1168 | 2.8 | 11.87 | B143 | TP/TBP160L6 | 25464 | 25464 |
| 79.4 | 1191 | 1.8 | 18.58 | B123 | TP/TBP160MA4 | 25985 | 7424 |
| 79.4 | 1150 | 3.1 | 36.67 | B143 | TBS132MB2 | 25810 | 25810 |
| 79.1 | 1196 | 3.0 | 18.66 | B143 | TP/TBP160MA4 | 25699 | 25699 |
| 77.7 | 1229 | 1.7 | 12.48 | B123 | TP/TBP160L6 | 26034 | 7438 |
| 77.5 | 1220 | 1.8 | 18.58 | B123 | TBS132MC4 | 26102 | 7458 |
| 77.5 | 1220 | 1.8 | 18.58 | B123 | TBS160S4 | 26102 | 7458 |
| 77.4 | 1221 | 1.1 | 19.06 | B103 | TP/TBP160MA4 | 18843 | 5384 |
| 77.2 | 1225 | 2.9 | 18.66 | B143 | TBS132MC4 | 25841 | 25841 |
| 77.2 | 1225 | 2.9 | 18.66 | B143 | TBS160S4 | 25841 | 25841 |
| 76.7 | 1245 | 3.8 | 12.64 | B153 | TP/TBP160L6 | 45297 | 45297 |
| 75.6 | 1251 | 1.1 | 19.06 | B103 | TBS132MC4 | 18936 | 5410 |
| 75.6 | 1251 | 1.1 | 19.06 | B103 | TBS160S4 | 18936 | 5410 |
| 72.2 | 1263 | 2.8 | 40.29 | B143 | TBS132MB2 | 26378 | 26378 |
| 71.8 | 1271 | 1.7 | 40.53 | B123 | TBS132MB2 | 26680 | 7623 |

# 5.1 B/BA MOTORIDUTTORE (50Hz)



## 11.00 kW

| n2 [rpm] | M2 [Nm] | fs | i | Riduttore | Motore | Fr2 D-S-P [N] | Fr2 C [N] |
|---|---|---|---|---|---|---|---|
| 71.6 | 1321 | 1.9 | 20.61 | B123 | TP/TBP160MA4 | 26483 | 7567 |
| 70.2 | 1346 | 3.0 | 21.00 | B143 | TP/TBP160MA4 | 26394 | 26394 |
| 70.1 | 1363 | 1.6 | 13.84 | B123 | TP/TBP160L6 | 26520 | 7577 |
| 69.9 | 1353 | 1.8 | 20.61 | B123 | TBS132MC4 | 26594 | 7598 |
| 69.9 | 1353 | 1.8 | 20.61 | B123 | TBS160S4 | 26594 | 7598 |
| 69.2 | 1379 | 3.8 | 14.01 | B153 | TP/TBP160L6 | 46724 | 46724 |
| 68.6 | 1379 | 2.9 | 21.00 | B143 | TBS132MC4 | 26533 | 26533 |
| 68.6 | 1379 | 2.9 | 21.00 | B143 | TBS160S4 | 26533 | 26533 |
| 67.0 | 1426 | 2.3 | 14.49 | B143 | TP/TBP160L6 | 26627 | 26627 |
| 65.9 | 1385 | 2.6 | 44.16 | B143 | TBS132MB2 | 26925 | 26925 |
| 64.8 | 1407 | 1.6 | 44.89 | B123 | TBS132MB2 | 27167 | 7762 |
| 64.8 | 1460 | 3.0 | 22.77 | B143 | TP/TBP160MA4 | 26864 | 26864 |
| 64.7 | 1460 | 1.9 | 22.78 | B123 | TP/TBP160MA4 | 26938 | 7696 |
| 63.2 | 1496 | 1.9 | 22.78 | B123 | TBS132MC4 | 27042 | 7726 |
| 63.2 | 1496 | 1.9 | 22.78 | B123 | TBS160S4 | 27042 | 7726 |
| 63.2 | 1495 | 2.9 | 22.77 | B143 | TBS132MC4 | 27002 | 27002 |
| 63.2 | 1495 | 2.9 | 22.77 | B143 | TBS160S4 | 27002 | 27002 |
| 63.1 | 1514 | 1.5 | 15.38 | B123 | TP/TBP160L6 | 26984 | 7710 |
| 63.0 | 1516 | 3.5 | 15.40 | B153 | TP/TBP160L6 | 48069 | 48069 |
| 62.2 | 1519 | 0.9 | 23.70 | B103 | TP/TBP160MA4 | 19656 | 5616 |
| 60.2 | 1516 | 2.5 | 48.35 | B143 | TBS132MB2 | 27458 | 27458 |
| 58.4 | 1561 | 1.5 | 49.80 | B123 | TBS132MB2 | 27632 | 7895 |
| 57.6 | 1643 | 2.8 | 25.63 | B143 | TP/TBP160MA4 | 27533 | 27533 |
| 57.6 | 1585 | 3.8 | 50.56 | B153 | TBS132MB2 | 49487 | 49487 |
| 57.0 | 1659 | 1.7 | 25.89 | B123 | TP/TBP160MA4 | 27472 | 7849 |
| 56.9 | 1678 | 2.0 | 17.04 | B143 | TP/TBP160L6 | 27541 | 27541 |
| 56.2 | 1683 | 2.7 | 25.63 | B143 | TBS132MC4 | 27666 | 27666 |
| 56.2 | 1683 | 2.7 | 25.63 | B143 | TBS160S4 | 27666 | 27666 |
| 55.6 | 1700 | 1.6 | 25.89 | B123 | TBS132MC4 | 27566 | 7876 |
| 55.6 | 1700 | 1.6 | 25.89 | B123 | TBS160S4 | 27566 | 7876 |
| 54.7 | 1667 | 2.3 | 53.16 | B143 | TBS132MB2 | 28003 | 28003 |
| 53.7 | 1759 | 2.6 | 27.44 | B143 | TP/TBP160MA4 | 27910 | 27910 |
| 53.6 | 1702 | 1.4 | 54.30 | B123 | TBS132MB2 | 27991 | 7997 |
| 53.6 | 1763 | 1.6 | 27.51 | B123 | TP/TBP160MA4 | 27705 | 7916 |
| 53.3 | 1713 | 2.2 | 54.63 | B143 | TBS132MB2 | 28157 | 28157 |
| 53.3 | 1713 | 3.5 | 54.64 | B153 | TBS132MB2 | 50643 | 50643 |
| 52.5 | 1802 | 2.6 | 27.44 | B143 | TBS132MC4 | 28041 | 28041 |
| 52.5 | 1802 | 2.6 | 27.44 | B143 | TBS160S4 | 28041 | 28041 |
| 52.3 | 1806 | 1.6 | 27.51 | B123 | TBS132MC4 | 27793 | 7941 |
| 52.3 | 1806 | 1.6 | 27.51 | B123 | TBS160S4 | 27793 | 7941 |
| 52.3 | 1827 | 3.4 | 18.56 | B153 | TP/TBP160L6 | 50804 | 50804 |

# 5.1 B/BA MOTORIDUTTORE (50Hz)



## 11.00 kW

| n2 [rpm] | M2 [Nm] | fs | i | Riduttore | Motore | Fr2 D-S-P [N] | Fr2 C [N] |
|---|---|---|---|---|---|---|---|
| 52.2 | 1829 | 1.3 | 18.58 | B123 | TP/TBP160L6 | 27719 | 7920 |
| 52.0 | 1837 | 2.1 | 18.66 | B143 | TP/TBP160L6 | 28032 | 28032 |
| 50.8 | 1796 | 3.3 | 57.27 | B153 | TBS132MB2 | 51354 | 51354 |
| 49.3 | 1850 | 2.0 | 59.02 | B143 | TBS132MB2 | 28587 | 28587 |
| 49.1 | 1926 | 2.4 | 30.05 | B143 | TP/TBP160MA4 | 28396 | 28396 |
| 49.0 | 1861 | 1.3 | 59.36 | B123 | TBS132MB2 | 28330 | 8094 |
| 47.9 | 1974 | 1.4 | 30.79 | B123 | TP/TBP160MA4 | 28096 | 8027 |
| 47.9 | 1973 | 2.4 | 30.05 | B143 | TBS132MC4 | 28521 | 28521 |
| 47.9 | 1973 | 2.4 | 30.05 | B143 | TBS160S4 | 28521 | 28521 |
| 47.8 | 1910 | 3.1 | 60.92 | B153 | TBS132MB2 | 52298 | 52298 |
| 47.2 | 2004 | 1.4 | 31.26 | B123 | TP/TBP160MA4 | 28143 | 8041 |
| 47.2 | 2024 | 3.4 | 20.56 | B153 | TP/TBP160L6 | 52359 | 52359 |
| 47.1 | 2029 | 1.3 | 20.61 | B123 | TP/TBP160L6 | 28058 | 8017 |
| 46.8 | 2022 | 1.4 | 30.79 | B123 | TBS132MC4 | 28171 | 8049 |
| 46.8 | 2022 | 1.4 | 30.79 | B123 | TBS160S4 | 28171 | 8049 |
| 46.5 | 1962 | 1.3 | 62.59 | B123 | TBS132MB2 | 28515 | 8147 |
| 46.2 | 2067 | 2.0 | 21.00 | B143 | TP/TBP160L6 | 28645 | 28645 |
| 46.1 | 2053 | 1.4 | 31.26 | B123 | TBS132MC4 | 28217 | 8062 |
| 46.1 | 2053 | 1.4 | 31.26 | B123 | TBS160S4 | 28217 | 8062 |
| 45.8 | 1990 | 3.0 | 63.47 | B153 | TBS132MB2 | 52931 | 52931 |
| 44.9 | 2034 | 1.8 | 64.88 | B143 | TBS132MB2 | 29095 | 29095 |
| 44.7 | 2116 | 2.2 | 33.01 | B143 | TP/TBP160MA4 | 28879 | 28879 |
| 43.9 | 2156 | 3.7 | 33.63 | B153 | TP/TBP160MA4 | 53512 | 53512 |
| 43.6 | 2167 | 2.2 | 33.01 | B143 | TBS132MC4 | 28998 | 28998 |
| 43.6 | 2167 | 2.2 | 33.01 | B143 | TBS160S4 | 28998 | 28998 |
| 42.8 | 2208 | 3.6 | 33.63 | B153 | TBS132MC4 | 53886 | 53886 |
| 42.8 | 2208 | 3.6 | 33.63 | B153 | TBS160S4 | 53886 | 53886 |
| 42.6 | 2243 | 1.3 | 22.78 | B123 | TP/TBP160L6 | 28332 | 8095 |
| 42.6 | 2242 | 2.1 | 22.77 | B143 | TP/TBP160L6 | 29044 | 29044 |
| 42.5 | 2223 | 1.3 | 34.68 | B123 | TP/TBP160MA4 | 28438 | 8125 |
| 42.1 | 2245 | 3.6 | 35.02 | B153 | TP/TBP160MA4 | 54142 | 54142 |
| 41.9 | 2177 | 1.1 | 69.43 | B123 | TBS132MB2 | 28837 | 8239 |
| 41.5 | 2277 | 1.2 | 34.68 | B123 | TBS132MC4 | 28497 | 8142 |
| 41.5 | 2277 | 1.2 | 34.68 | B123 | TBS160S4 | 28497 | 8142 |
| 41.3 | 2208 | 1.7 | 70.43 | B143 | TBS132MB2 | 29518 | 29518 |
| 41.1 | 2299 | 3.5 | 35.02 | B153 | TBS160S4 | 54519 | 54519 |
| 40.9 | 2231 | 2.7 | 71.15 | B153 | TBS132MB2 | 54722 | 54722 |
| 40.7 | 2349 | 3.0 | 23.86 | B153 | TP/TBP160L6 | 54664 | 54664 |
| 40.2 | 2351 | 2.0 | 36.67 | B143 | TP/TBP160MA4 | 29389 | 29389 |
| 39.3 | 2408 | 2.0 | 36.67 | B143 | TBS132MC4 | 29500 | 29500 |
| 39.3 | 2408 | 2.0 | 36.67 | B143 | TBS160S4 | 29500 | 29500 |

# 5.1 B/BA MOTORIDUTTORE (50Hz)



## 11.00 kW

| n2 [rpm] | M2 [Nm] | fs | i | Riduttore | Motore | Fr2 D-S-P [N] | Fr2 C [N] |
|---|---|---|---|---|---|---|---|
| 39.1 | 2333 | 1.1 | 74.42 | B123 | TBS132MB2 | 29018 | 8291 |
| 38.5 | 2480 | 2.9 | 25.19 | B153 | TP/TBP160L6 | 55521 | 55521 |
| 38.0 | 2487 | 3.2 | 38.81 | B153 | TP/TBP160MA4 | 55766 | 55766 |
| 37.8 | 2523 | 1.9 | 25.63 | B143 | TP/TBP160L6 | 29586 | 29586 |
| 37.7 | 2418 | 1.6 | 77.12 | B143 | TBS132MB2 | 29959 | 29959 |
| 37.7 | 2421 | 2.5 | 77.22 | B153 | TBS132MB2 | 56032 | 56032 |
| 37.5 | 2549 | 1.2 | 25.89 | B123 | TP/TBP160L6 | 28592 | 8169 |
| 37.1 | 2548 | 3.1 | 38.81 | B153 | TBS160S4 | 56150 | 56150 |
| 36.6 | 2583 | 1.9 | 40.29 | B143 | TP/TBP160MA4 | 29812 | 29812 |
| 36.4 | 2598 | 1.1 | 40.53 | B123 | TP/TBP160MA4 | 28754 | 8216 |
| 36.4 | 2509 | 1.0 | 80.04 | B123 | TBS132MB2 | 29174 | 8335 |
| 35.7 | 2645 | 1.8 | 40.29 | B143 | TBS132MC4 | 29915 | 29915 |
| 35.7 | 2645 | 1.8 | 40.29 | B143 | TBS160S4 | 29915 | 29915 |
| 35.5 | 2661 | 1.1 | 40.53 | B123 | TBS132MC4 | 28788 | 8225 |
| 35.5 | 2661 | 1.1 | 40.53 | B123 | TBS160S4 | 28788 | 8225 |
| 35.3 | 2708 | 1.1 | 27.51 | B123 | TP/TBP160L6 | 28674 | 8193 |
| 35.3 | 2702 | 1.8 | 27.44 | B143 | TP/TBP160L6 | 29876 | 29876 |
| 34.9 | 2711 | 3.0 | 42.30 | B153 | TP/TBP160MA4 | 57150 | 57150 |
| 34.7 | 2630 | 2.3 | 83.89 | B153 | TBS132MB2 | 57376 | 57376 |
| 34.4 | 2779 | 3.0 | 28.23 | B153 | TP/TBP160L6 | 57351 | 57351 |
| 34.0 | 2682 | 1.4 | 85.54 | B143 | TBS132MB2 | 30428 | 30428 |
| 34.0 | 2777 | 2.9 | 42.30 | B153 | TBS132MC4 | 57540 | 57540 |
| 34.0 | 2777 | 2.9 | 42.30 | B153 | TBS160S4 | 57540 | 57540 |
| 33.7 | 2835 | 3.8 | 28.80 | B163 | TP/TBP160L6 | 80000 | 65000 |
| 33.4 | 2831 | 1.7 | 44.16 | B143 | TP/TBP160MA4 | 30190 | 30190 |
| 33.2 | 2748 | 2.2 | 87.65 | B153 | TBS132MB2 | 58096 | 58096 |
| 32.9 | 2877 | 1.0 | 44.89 | B123 | TP/TBP160MA4 | 28865 | 8247 |
| 32.6 | 2899 | 1.7 | 44.16 | B143 | TBS132MC4 | 30283 | 30283 |
| 32.6 | 2899 | 1.7 | 44.16 | B143 | TBS160S4 | 30283 | 30283 |
| 32.3 | 2958 | 1.7 | 30.05 | B143 | TP/TBP160L6 | 30227 | 30227 |
| 32.1 | 2947 | 1.0 | 44.89 | B123 | TBS132MC4 | 28879 | 8251 |
| 32.1 | 2947 | 1.0 | 44.89 | B123 | TBS160S4 | 28879 | 8251 |
| 32.0 | 2988 | 2.8 | 30.35 | B153 | TP/TBP160L6 | 58529 | 58529 |
| 31.5 | 3031 | 1.0 | 30.79 | B123 | TP/TBP160L6 | 28747 | 8214 |
| 31.4 | 3044 | 4.0 | 30.92 | B163 | TP/TBP160L6 | 80000 | 65000 |
| 31.3 | 2917 | 2.1 | 93.05 | B153 | TBS132MB2 | 59085 | 59085 |
| 31.0 | 3078 | 1.0 | 31.26 | B123 | TP/TBP160L6 | 28749 | 8214 |
| 31.0 | 3047 | 2.6 | 47.53 | B153 | TP/TBP160MA4 | 59058 | 59058 |
| 30.9 | 2951 | 1.3 | 94.13 | B143 | TBS132MB2 | 30819 | 30819 |
| 30.5 | 3099 | 1.6 | 48.35 | B143 | TP/TBP160MA4 | 30524 | 30524 |
| 30.3 | 3121 | 2.6 | 47.53 | B153 | TBS132MC4 | 59455 | 59455 |

# 5.1 B/BA MOTORIDUTTORE (50Hz)



## 11.00 kW

| n2 [rpm] | M2 [Nm] | fs | i | Riduttore | Motore | Fr2 D-S-P [N] | Fr2 C [N] |
|---|---|---|---|---|---|---|---|
| 30.3 | 3121 | 2.6 | 47.53 | B153 | TBS160S4 | 59455 | 59455 |
| 29.8 | 3175 | 1.6 | 48.35 | B143 | TBS132MC4 | 30605 | 30605 |
| 29.8 | 3175 | 1.6 | 48.35 | B143 | TBS160S4 | 30605 | 30605 |
| 29.6 | 3192 | 1.0 | 49.80 | B123 | TP/TBP160MA4 | 28885 | 8253 |
| 29.4 | 3250 | 1.5 | 33.01 | B143 | TP/TBP160L6 | 30547 | 30547 |
| 29.2 | 3241 | 2.5 | 50.56 | B153 | TP/TBP160MA4 | 60082 | 60082 |
| 28.9 | 3270 | 1.0 | 49.80 | B123 | TBS132MC4 | 28875 | 8250 |
| 28.9 | 3270 | 1.0 | 49.80 | B123 | TBS160S4 | 28875 | 8250 |
| 28.9 | 3269 | 4.0 | 51.00 | B163 | TP/TBP160MA4 | 80000 | 65000 |
| 28.8 | 3311 | 2.5 | 33.63 | B153 | TP/TBP160L6 | 60224 | 60224 |
| 28.5 | 3320 | 2.4 | 50.56 | B153 | TBS132MC4 | 60483 | 60483 |
| 28.5 | 3320 | 2.4 | 50.56 | B153 | TBS160S4 | 60483 | 60483 |
| 28.3 | 3372 | 3.7 | 34.25 | B163 | TP/TBP160L6 | 80000 | 65000 |
| 28.2 | 3233 | 1.9 | 103.12 | B153 | TBS132MB2 | 60807 | 60807 |
| 28.2 | 3348 | 3.9 | 51.00 | B163 | TBS160S4 | 80000 | 65000 |
| 27.7 | 3407 | 1.5 | 53.16 | B143 | TP/TBP160MA4 | 30825 | 30825 |
| 27.7 | 3447 | 2.4 | 35.02 | B153 | TP/TBP160L6 | 60897 | 60897 |
| 27.5 | 3318 | 1.1 | 105.83 | B143 | TBS132MB2 | 31235 | 31235 |
| 27.5 | 3438 | 3.8 | 53.63 | B163 | TP/TBP160MA4 | 80000 | 65000 |
| 27.2 | 3480 | 0.9 | 54.30 | B123 | TP/TBP160MA4 | 28821 | 8235 |
| 27.1 | 3490 | 1.4 | 53.16 | B143 | TBS132MC4 | 30893 | 30893 |
| 27.1 | 3490 | 1.4 | 53.16 | B143 | TBS160S4 | 30893 | 30893 |
| 27.0 | 3501 | 1.4 | 54.63 | B143 | TP/TBP160MA4 | 30902 | 30902 |
| 27.0 | 3502 | 2.3 | 54.64 | B153 | TP/TBP160MA4 | 61380 | 61380 |
| 26.9 | 3521 | 3.7 | 53.63 | B163 | TBS160S4 | 80000 | 65000 |
| 26.5 | 3610 | 1.4 | 36.67 | B143 | TP/TBP160L6 | 30842 | 30842 |
| 26.4 | 3587 | 1.4 | 54.63 | B143 | TBS132MC4 | 30965 | 30965 |
| 26.4 | 3587 | 1.4 | 54.63 | B143 | TBS160S4 | 30965 | 30965 |
| 26.4 | 3587 | 2.2 | 54.64 | B153 | TBS132MC4 | 61784 | 61784 |
| 26.4 | 3587 | 2.2 | 54.64 | B153 | TBS160S4 | 61784 | 61784 |
| 26.0 | 3510 | 1.1 | 111.94 | B143 | TBS132MB2 | 31406 | 31406 |
| 25.8 | 3671 | 2.2 | 57.27 | B153 | TP/TBP160MA4 | 62173 | 62173 |
| 25.8 | 3708 | 3.5 | 37.66 | B163 | TP/TBP160L6 | 80000 | 65000 |
| 25.1 | 3760 | 2.1 | 57.27 | B153 | TBS132MC4 | 62580 | 62580 |
| 25.1 | 3760 | 2.1 | 57.27 | B153 | TBS160S4 | 62580 | 62580 |
| 25.0 | 3783 | 1.3 | 59.02 | B143 | TP/TBP160MA4 | 31091 | 31091 |
| 25.0 | 3820 | 2.2 | 38.81 | B153 | TP/TBP160L6 | 62624 | 62624 |
| 25.0 | 3780 | 3.4 | 58.97 | B163 | TP/TBP160MA4 | 80000 | 65000 |
| 24.4 | 3875 | 1.3 | 59.02 | B143 | TBS132MC4 | 31141 | 31141 |
| 24.4 | 3875 | 1.3 | 59.02 | B143 | TBS160S4 | 31141 | 31141 |
| 24.4 | 3871 | 3.4 | 58.97 | B163 | TBS160S4 | 80000 | 65000 |

# 5.1 B/BA MOTORIDUTTORE (50Hz)



## 11.00 kW

| n2 [rpm] | M2 [Nm] | fs | i | Riduttore | Motore | Fr2 D-S-P [N] | Fr2 C [N] |
|---|---|---|---|---|---|---|---|
| 24.2 | 3905 | 2.0 | 60.92 | B153 | TP/TBP160MA4 | 63222 | 63222 |
| 24.1 | 3966 | 1.3 | 40.29 | B143 | TP/TBP160L6 | 31042 | 31042 |
| 23.9 | 4002 | 3.3 | 40.65 | B163 | TP/TBP160L6 | 80000 | 65000 |
| 23.6 | 4000 | 2.0 | 60.92 | B153 | TBS132MC4 | 63631 | 63631 |
| 23.6 | 4000 | 2.0 | 60.92 | B153 | TBS160S4 | 63631 | 63631 |
| 23.5 | 3884 | 1.5 | 123.88 | B153 | TBS132MB2 | 63943 | 63943 |
| 23.2 | 4068 | 2.0 | 63.47 | B153 | TP/TBP160MA4 | 63921 | 63921 |
| 22.9 | 4164 | 2.0 | 42.30 | B153 | TP/TBP160L6 | 64086 | 64086 |
| 22.7 | 4159 | 1.2 | 64.88 | B143 | TP/TBP160MA4 | 31262 | 31262 |
| 22.7 | 4167 | 1.9 | 63.47 | B153 | TBS132MC4 | 64332 | 64332 |
| 22.7 | 4167 | 1.9 | 63.47 | B153 | TBS160S4 | 64332 | 64332 |
| 22.2 | 4260 | 1.2 | 64.88 | B143 | TBS132MC4 | 31294 | 31294 |
| 22.2 | 4260 | 1.2 | 64.88 | B143 | TBS160S4 | 31294 | 31294 |
| 22.0 | 4347 | 1.2 | 44.16 | B143 | TP/TBP160L6 | 31169 | 31169 |
| 21.7 | 4210 | 1.4 | 134.27 | B153 | TBS132MB2 | 65000 | 65000 |
| 21.5 | 4439 | 2.8 | 45.09 | B163 | TP/TBP160L6 | 80000 | 65000 |
| 21.1 | 4472 | 2.9 | 69.78 | B163 | TP/TBP160MA4 | 80000 | 65000 |
| 20.9 | 4515 | 1.1 | 70.43 | B143 | TP/TBP160MA4 | 31350 | 31350 |
| 20.7 | 4560 | 1.8 | 71.15 | B153 | TP/TBP160MA4 | 65000 | 65000 |
| 20.6 | 4581 | 2.8 | 69.78 | B163 | TBS160S4 | 80000 | 65000 |
| 20.4 | 4624 | 1.1 | 70.43 | B143 | TBS132MC4 | 31364 | 31364 |
| 20.4 | 4624 | 1.1 | 70.43 | B143 | TBS160S4 | 31364 | 31364 |
| 20.4 | 4679 | 1.8 | 47.53 | B153 | TP/TBP160L6 | 65000 | 65000 |
| 20.2 | 4671 | 1.7 | 71.15 | B153 | TBS132MC4 | 65000 | 65000 |
| 20.2 | 4671 | 1.7 | 71.15 | B153 | TBS160S4 | 65000 | 65000 |
| 20.1 | 4760 | 1.1 | 48.35 | B143 | TP/TBP160L6 | 31221 | 31221 |
| 19.5 | 4680 | 1.3 | 149.26 | B153 | TBS132MB2 | 65000 | 65000 |
| 19.2 | 4978 | 1.7 | 50.56 | B153 | TP/TBP160L6 | 65000 | 65000 |
| 19.2 | 4917 | 2.6 | 76.72 | B163 | TP/TBP160MA4 | 80000 | 65000 |
| 19.1 | 4943 | 1.0 | 77.12 | B143 | TP/TBP160MA4 | 31373 | 31373 |
| 19.1 | 4950 | 1.6 | 77.22 | B153 | TP/TBP160MA4 | 65000 | 65000 |
| 19.0 | 5021 | 2.7 | 51.00 | B163 | TP/TBP160L6 | 80000 | 65000 |
| 18.8 | 5037 | 2.6 | 76.72 | B163 | TBS160S4 | 80000 | 65000 |
| 18.7 | 5063 | 1.0 | 77.12 | B143 | TBS132MC4 | 31365 | 31365 |
| 18.7 | 5063 | 1.0 | 77.12 | B143 | TBS160S4 | 31365 | 31365 |
| 18.6 | 5070 | 1.6 | 77.22 | B153 | TBS132MC4 | 65000 | 65000 |
| 18.6 | 5070 | 1.6 | 77.22 | B153 | TBS160S4 | 65000 | 65000 |
| 18.2 | 5233 | 1.0 | 53.16 | B143 | TP/TBP160L6 | 31186 | 31186 |
| 18.1 | 5279 | 2.6 | 53.63 | B163 | TP/TBP160L6 | 80000 | 65000 |
| 17.8 | 5378 | 1.0 | 54.63 | B143 | TP/TBP160L6 | 31157 | 31157 |
| 17.8 | 5379 | 1.6 | 54.64 | B153 | TP/TBP160L6 | 65000 | 65000 |

# 5.1 B/BA MOTORIDUTTORE (50Hz)



## 11.00 kW

| n2 [rpm] | M2 [Nm] | fs | i | Riduttore | Motore | Fr2 D-S-P [N] | Fr2 C [N] |
|---|---|---|---|---|---|---|---|
| 17.6 | 5377 | 1.5 | 83.89 | B153 | TP/TBP160MA4 | 65000 | 65000 |
| 17.6 | 5186 | 1.2 | 165.42 | B153 | TBS132MB2 | 65000 | 65000 |
| 17.2 | 5483 | 0.9 | 85.54 | B143 | TP/TBP160MA4 | 31291 | 31291 |
| 17.2 | 5508 | 1.5 | 83.89 | B153 | TBS132MC4 | 65000 | 65000 |
| 17.2 | 5508 | 1.5 | 83.89 | B153 | TBS160S4 | 65000 | 65000 |
| 16.9 | 5638 | 1.5 | 57.27 | B153 | TP/TBP160L6 | 65000 | 65000 |
| 16.9 | 5611 | 2.3 | 87.54 | B163 | TP/TBP160MA4 | 80000 | 65000 |
| 16.8 | 5618 | 1.4 | 87.65 | B153 | TP/TBP160MA4 | 65000 | 65000 |
| 16.5 | 5805 | 2.4 | 58.97 | B163 | TP/TBP160L6 | 80000 | 65000 |
| 16.5 | 5747 | 2.3 | 87.54 | B163 | TBS160S4 | 80000 | 65000 |
| 16.4 | 5810 | 0.9 | 59.02 | B143 | TP/TBP160L6 | 31026 | 31026 |
| 16.4 | 5755 | 1.4 | 87.65 | B153 | TBS132MC4 | 65000 | 65000 |
| 16.4 | 5755 | 1.4 | 87.65 | B153 | TBS160S4 | 65000 | 65000 |
| 15.9 | 5964 | 1.3 | 93.05 | B153 | TP/TBP160MA4 | 65000 | 65000 |
| 15.9 | 5997 | 1.4 | 60.92 | B153 | TP/TBP160L6 | 65000 | 65000 |
| 15.5 | 6109 | 1.3 | 93.05 | B153 | TBS132MC4 | 65000 | 65000 |
| 15.5 | 6109 | 1.3 | 93.05 | B153 | TBS160S4 | 65000 | 65000 |
| 15.3 | 6248 | 1.3 | 63.47 | B153 | TP/TBP160L6 | 65000 | 65000 |
| 15.3 | 6169 | 2.1 | 96.25 | B163 | TP/TBP160MA4 | 80000 | 65000 |
| 15.0 | 6319 | 2.1 | 96.25 | B163 | TBS160S4 | 80000 | 65000 |
| 14.3 | 6610 | 1.2 | 103.12 | B153 | TP/TBP160MA4 | 65000 | 65000 |
| 14.2 | 6662 | 2.0 | 103.93 | B163 | TP/TBP160MA4 | 80000 | 65000 |
| 14.0 | 6770 | 1.2 | 103.12 | B153 | TBS132MC4 | 65000 | 65000 |
| 14.0 | 6770 | 1.2 | 103.12 | B153 | TBS160S4 | 65000 | 65000 |
| 13.9 | 6869 | 2.0 | 69.78 | B163 | TP/TBP160L6 | 80000 | 65000 |
| 13.9 | 6824 | 1.9 | 103.93 | B163 | TBS160S4 | 80000 | 65000 |
| 13.6 | 7004 | 1.2 | 71.15 | B153 | TP/TBP160L6 | 65000 | 65000 |
| 12.9 | 7325 | 1.8 | 114.27 | B163 | TP/TBP160MA4 | 80000 | 65000 |
| 12.6 | 7602 | 1.1 | 77.22 | B153 | TP/TBP160L6 | 65000 | 65000 |
| 12.6 | 7552 | 1.8 | 76.72 | B163 | TP/TBP160L6 | 80000 | 65000 |
| 12.6 | 7503 | 1.7 | 114.27 | B163 | TBS160S4 | 80000 | 65000 |
| 11.9 | 7940 | 1.0 | 123.88 | B153 | TP/TBP160MA4 | 65000 | 65000 |
| 11.7 | 8095 | 1.6 | 126.29 | B163 | TP/TBP160MA4 | 80000 | 65000 |
| 11.6 | 8258 | 1.0 | 83.89 | B153 | TP/TBP160L6 | 65000 | 65000 |
| 11.6 | 8133 | 1.0 | 123.88 | B153 | TBS132MC4 | 65000 | 65000 |
| 11.6 | 8133 | 1.0 | 123.88 | B153 | TBS160S4 | 65000 | 65000 |
| 11.4 | 8292 | 1.6 | 126.29 | B163 | TBS160S4 | 80000 | 65000 |
| 11.1 | 8629 | 1.0 | 87.65 | B153 | TP/TBP160L6 | 65000 | 65000 |
| 11.1 | 8617 | 1.6 | 87.54 | B163 | TP/TBP160L6 | 80000 | 65000 |
| 11.0 | 8606 | 0.9 | 134.27 | B153 | TP/TBP160MA4 | 65000 | 65000 |
| 10.7 | 8815 | 0.9 | 134.27 | B153 | TBS132MC4 | 65000 | 65000 |

# 5.1 B/BA MOTORIDUTTORE (50Hz)



## 11.00 kW

| n2 [rpm] | M2 [Nm] | fs | i | Riduttore | Motore | Fr2 D-S-P [N] | Fr2 C [N] |
|---|---|---|---|---|---|---|---|
| 10.7 | 8815 | 0.9 | 134.27 | B153 | TBS160S4 | 65000 | 65000 |
| 10.6 | 8900 | 1.5 | 138.85 | B163 | TP/TBP160MA4 | 80000 | 65000 |
| 10.4 | 9160 | 0.9 | 93.05 | B153 | TP/TBP160L6 | 65000 | 65000 |
| 10.4 | 9117 | 1.4 | 138.85 | B163 | TBS160S4 | 80000 | 65000 |
| 10.1 | 9475 | 1.4 | 96.25 | B163 | TP/TBP160L6 | 80000 | 65000 |
| 9.5 | 9924 | 1.3 | 154.83 | B163 | TP/TBP160MA4 | 80000 | 65000 |
| 9.3 | 10231 | 1.3 | 103.93 | B163 | TP/TBP160L6 | 80000 | 65000 |
| 9.3 | 10166 | 1.3 | 154.83 | B163 | TBS160S4 | 80000 | 65000 |
| 8.5 | 11249 | 1.2 | 114.27 | B163 | TP/TBP160L6 | 80000 | 65000 |
| 7.7 | 12432 | 1.1 | 126.29 | B163 | TP/TBP160L6 | 80000 | 65000 |
| 7.0 | 13669 | 1.0 | 138.85 | B163 | TP/TBP160L6 | 80000 | 65000 |

## 15.00 kW

| n2 [rpm] | M2 [Nm] | fs | i | Riduttore | Motore | Fr2 D-S-P [N] | Fr2 C [N] |
|---|---|---|---|---|---|---|---|
| 185.2 | 696 | 2.2 | 7.97 | B123 | TP/TBP160LA4 | 20589 | 5883 |
| 181.5 | 710 | 1.1 | 8.13 | B103 | TP/TBP160LA4 | 14833 | 4238 |
| 164.5 | 784 | 1.1 | 8.97 | B103 | TP/TBP160LA4 | 15179 | 4337 |
| 153.3 | 841 | 2.1 | 9.62 | B123 | TP/TBP160LA4 | 21453 | 6129 |
| 142.7 | 903 | 2.2 | 10.33 | B123 | TP/TBP160LA4 | 21771 | 6220 |
| 136.1 | 947 | 3.2 | 10.84 | B143 | TP/TBP160LA4 | 21649 | 21649 |
| 135.1 | 955 | 1.0 | 10.92 | B103 | TP/TBP160LA4 | 15859 | 4531 |
| 124.3 | 1037 | 3.0 | 11.87 | B143 | TP/TBP160LA4 | 22112 | 22112 |
| 123.0 | 1058 | 1.5 | 7.97 | B123 | TP/TBP180L6 | 22361 | 6389 |
| 122.4 | 1053 | 0.9 | 12.05 | B103 | TP/TBP160LA4 | 16189 | 4626 |
| 118.2 | 1091 | 1.8 | 12.48 | B123 | TP/TBP160LA4 | 22574 | 6450 |
| 106.5 | 1210 | 1.7 | 13.84 | B123 | TP/TBP160LA4 | 22988 | 6568 |
| 101.9 | 1278 | 1.5 | 9.62 | B123 | TP/TBP180L6 | 23100 | 6600 |
| 101.8 | 1266 | 2.4 | 14.49 | B143 | TP/TBP160LA4 | 23110 | 23110 |
| 98.4 | 1310 | 0.9 | 14.99 | B103 | TP/TBP160LA4 | 16885 | 4824 |
| 95.9 | 1345 | 1.6 | 15.38 | B123 | TP/TBP160LA4 | 23379 | 6680 |
| 95.8 | 1346 | 3.7 | 15.40 | B153 | TP/TBP160LA4 | 41822 | 41822 |
| 94.8 | 1373 | 1.5 | 10.33 | B123 | TP/TBP180L6 | 23356 | 6673 |
| 93.4 | 1394 | 3.4 | 10.49 | B153 | TP/TBP180L6 | 42116 | 42116 |
| 90.4 | 1440 | 2.2 | 10.84 | B143 | TP/TBP180L6 | 23641 | 23641 |
| 86.6 | 1489 | 2.1 | 17.04 | B143 | TP/TBP160LA4 | 23893 | 23893 |
| 85.4 | 1510 | 0.9 | 17.27 | B103 | TP/TBP160LA4 | 17301 | 4943 |
| 82.6 | 1577 | 2.1 | 11.87 | B143 | TP/TBP180L6 | 24062 | 24062 |
| 79.5 | 1622 | 3.7 | 18.56 | B153 | TP/TBP160LA4 | 44196 | 44196 |
| 79.4 | 1624 | 1.4 | 18.58 | B123 | TP/TBP160LA4 | 23995 | 6856 |
| 79.1 | 1631 | 2.2 | 18.66 | B143 | TP/TBP160LA4 | 24312 | 24312 |

# 5.1 B/BA MOTORIDUTTORE (50Hz)



## 15.00 kW

| n2 [rpm] | M2 [Nm] | fs | i | Riduttore | Motore | Fr2 D-S-P [N] | Fr2 C [N] |
|---|---|---|---|---|---|---|---|
| 78.5 | 1658 | 1.3 | 12.48 | B123 | TP/TBP180L6 | 23952 | 6843 |
| 77.5 | 1680 | 2.8 | 12.64 | B153 | TP/TBP180L6 | 44499 | 44499 |
| 71.7 | 1797 | 3.6 | 20.56 | B153 | TP/TBP160LA4 | 45545 | 45545 |
| 71.6 | 1801 | 1.4 | 20.61 | B123 | TP/TBP160LA4 | 24275 | 6936 |
| 70.8 | 1840 | 1.2 | 13.84 | B123 | TP/TBP180L6 | 24218 | 6920 |
| 70.2 | 1835 | 2.2 | 21.00 | B143 | TP/TBP160LA4 | 24832 | 24832 |
| 69.9 | 1862 | 2.8 | 14.01 | B153 | TP/TBP180L6 | 45852 | 45852 |
| 67.7 | 1925 | 1.7 | 14.49 | B143 | TP/TBP180L6 | 24931 | 24931 |
| 64.8 | 1990 | 2.2 | 22.77 | B143 | TP/TBP160LA4 | 25171 | 25171 |
| 64.7 | 1991 | 1.4 | 22.78 | B123 | TP/TBP160LA4 | 24497 | 6999 |
| 63.7 | 2044 | 1.1 | 15.38 | B123 | TP/TBP180L6 | 24435 | 6981 |
| 63.6 | 2046 | 2.6 | 15.40 | B153 | TP/TBP180L6 | 47121 | 47121 |
| 61.8 | 2085 | 3.2 | 23.86 | B153 | TP/TBP160LA4 | 47544 | 47544 |
| 58.6 | 2202 | 3.1 | 25.19 | B153 | TP/TBP160LA4 | 48287 | 48287 |
| 57.6 | 2240 | 2.1 | 25.63 | B143 | TP/TBP160LA4 | 25627 | 25627 |
| 57.5 | 2264 | 1.5 | 17.04 | B143 | TP/TBP180L6 | 25559 | 25559 |
| 57.0 | 2263 | 1.2 | 25.89 | B123 | TP/TBP160LA4 | 24699 | 7057 |
| 53.7 | 2399 | 1.9 | 27.44 | B143 | TP/TBP160LA4 | 25870 | 25870 |
| 53.6 | 2405 | 1.2 | 27.51 | B123 | TP/TBP160LA4 | 24758 | 7074 |
| 52.8 | 2468 | 0.9 | 18.58 | B123 | TP/TBP180L6 | 24657 | 7045 |
| 52.8 | 2465 | 2.6 | 18.56 | B153 | TP/TBP180L6 | 49686 | 49686 |
| 52.5 | 2479 | 1.5 | 18.66 | B143 | TP/TBP180L6 | 25869 | 25869 |
| 52.2 | 2468 | 3.2 | 28.23 | B153 | TP/TBP160LA4 | 49873 | 49873 |
| 49.1 | 2626 | 1.8 | 30.05 | B143 | TP/TBP160LA4 | 26162 | 26162 |
| 48.6 | 2653 | 3.0 | 30.35 | B153 | TP/TBP160LA4 | 50894 | 50894 |
| 47.9 | 2692 | 1.0 | 30.79 | B123 | TP/TBP160LA4 | 24796 | 7085 |
| 47.7 | 2732 | 2.5 | 20.56 | B153 | TP/TBP180L6 | 51133 | 51133 |
| 47.6 | 2738 | 1.0 | 20.61 | B123 | TP/TBP180L6 | 24671 | 7049 |
| 47.2 | 2733 | 1.0 | 31.26 | B123 | TP/TBP160LA4 | 24794 | 7084 |
| 46.7 | 2790 | 1.5 | 21.00 | B143 | TP/TBP180L6 | 26220 | 26220 |
| 44.7 | 2885 | 1.6 | 33.01 | B143 | TP/TBP160LA4 | 26424 | 26424 |
| 44.7 | 2916 | 3.7 | 21.94 | B163 | TP/TBP180L6 | 80000 | 65000 |
| 43.9 | 2940 | 2.7 | 33.63 | B153 | TP/TBP160LA4 | 52362 | 52362 |
| 43.1 | 2994 | 4.0 | 34.25 | B163 | TP/TBP160LA4 | 80000 | 65000 |
| 43.0 | 3027 | 1.0 | 22.78 | B123 | TP/TBP180L6 | 24597 | 7028 |
| 43.0 | 3026 | 1.5 | 22.77 | B143 | TP/TBP180L6 | 26421 | 26421 |
| 42.5 | 3032 | 0.9 | 34.68 | B123 | TP/TBP160LA4 | 24722 | 7063 |
| 42.1 | 3061 | 2.6 | 35.02 | B153 | TP/TBP160LA4 | 52944 | 52944 |
| 41.1 | 3170 | 2.2 | 23.86 | B153 | TP/TBP180L6 | 53262 | 53262 |
| 40.5 | 3212 | 3.4 | 24.17 | B163 | TP/TBP180L6 | 80000 | 65000 |
| 40.2 | 3205 | 1.5 | 36.67 | B143 | TP/TBP160LA4 | 26662 | 26662 |

# 5.1 B/BA MOTORIDUTTORE (50Hz)



## 15.00 kW

| n2 [rpm] | M2 [Nm] | fs | i | Riduttore | Motore | Fr2 D-S-P [N] | Fr2 C [N] |
|---|---|---|---|---|---|---|---|
| 39.2 | 3292 | 3.7 | 37.66 | B163 | TP/TBP160LA4 | 80000 | 65000 |
| 38.9 | 3347 | 2.1 | 25.19 | B153 | TP/TBP180L6 | 54049 | 54049 |
| 38.2 | 3405 | 1.4 | 25.63 | B143 | TP/TBP180L6 | 26644 | 26644 |
| 38.0 | 3392 | 2.4 | 38.81 | B153 | TP/TBP160LA4 | 54439 | 54439 |
| 36.9 | 3531 | 3.3 | 26.58 | B163 | TP/TBP180L6 | 80000 | 65000 |
| 36.6 | 3522 | 1.4 | 40.29 | B143 | TP/TBP160LA4 | 26816 | 26816 |
| 36.3 | 3553 | 3.6 | 40.65 | B163 | TP/TBP160LA4 | 80000 | 65000 |
| 35.7 | 3646 | 1.3 | 27.44 | B143 | TP/TBP180L6 | 26732 | 26732 |
| 34.9 | 3697 | 2.2 | 42.30 | B153 | TP/TBP160LA4 | 55704 | 55704 |
| 34.7 | 3751 | 2.2 | 28.23 | B153 | TP/TBP180L6 | 55717 | 55717 |
| 34.0 | 3827 | 2.8 | 28.80 | B163 | TP/TBP180L6 | 80000 | 65000 |
| 33.4 | 3860 | 1.2 | 44.16 | B143 | TP/TBP160LA4 | 26906 | 26906 |
| 32.7 | 3941 | 3.0 | 45.09 | B163 | TP/TBP160LA4 | 80000 | 65000 |
| 32.6 | 3992 | 1.2 | 30.05 | B143 | TP/TBP180L6 | 26793 | 26793 |
| 32.3 | 4032 | 2.1 | 30.35 | B153 | TP/TBP180L6 | 56783 | 56783 |
| 31.7 | 4109 | 2.9 | 30.92 | B163 | TP/TBP180L6 | 80000 | 65000 |
| 31.0 | 4155 | 1.9 | 47.53 | B153 | TP/TBP160LA4 | 57433 | 57433 |
| 30.5 | 4226 | 1.2 | 48.35 | B143 | TP/TBP160LA4 | 26929 | 26929 |
| 29.7 | 4386 | 1.1 | 33.01 | B143 | TP/TBP180L6 | 26783 | 26783 |
| 29.2 | 4419 | 1.8 | 50.56 | B153 | TP/TBP160LA4 | 58353 | 58353 |
| 29.1 | 4469 | 1.9 | 33.63 | B153 | TP/TBP180L6 | 58306 | 58306 |
| 28.9 | 4458 | 2.9 | 51.00 | B163 | TP/TBP160LA4 | 80000 | 65000 |
| 28.6 | 4551 | 2.7 | 34.25 | B163 | TP/TBP180L6 | 80000 | 65000 |
| 28.0 | 4653 | 1.8 | 35.02 | B153 | TP/TBP180L6 | 58905 | 58905 |
| 27.7 | 4646 | 1.1 | 53.16 | B143 | TP/TBP160LA4 | 26873 | 26873 |
| 27.5 | 4688 | 2.8 | 53.63 | B163 | TP/TBP160LA4 | 80000 | 65000 |
| 27.0 | 4775 | 1.0 | 54.63 | B143 | TP/TBP160LA4 | 26840 | 26840 |
| 27.0 | 4776 | 1.7 | 54.64 | B153 | TP/TBP160LA4 | 59512 | 59512 |
| 26.7 | 4873 | 1.0 | 36.67 | B143 | TP/TBP180L6 | 26671 | 26671 |
| 26.0 | 5004 | 2.6 | 37.66 | B163 | TP/TBP180L6 | 80000 | 65000 |
| 25.8 | 5006 | 1.6 | 57.27 | B153 | TP/TBP160LA4 | 60215 | 60215 |
| 25.3 | 5156 | 1.6 | 38.81 | B153 | TP/TBP180L6 | 60434 | 60434 |
| 25.0 | 5158 | 1.0 | 59.02 | B143 | TP/TBP160LA4 | 26703 | 26703 |
| 25.0 | 5154 | 2.5 | 58.97 | B163 | TP/TBP160LA4 | 80000 | 65000 |
| 24.3 | 5353 | 0.9 | 40.29 | B143 | TP/TBP180L6 | 26469 | 26469 |
| 24.2 | 5325 | 1.5 | 60.92 | B153 | TP/TBP160LA4 | 61139 | 61139 |
| 24.1 | 5402 | 2.5 | 40.65 | B163 | TP/TBP180L6 | 80000 | 65000 |
| 23.2 | 5620 | 1.5 | 42.30 | B153 | TP/TBP180L6 | 61713 | 61713 |
| 23.2 | 5548 | 1.4 | 63.47 | B153 | TP/TBP160LA4 | 61750 | 61750 |
| 21.7 | 5991 | 2.1 | 45.09 | B163 | TP/TBP180L6 | 80000 | 65000 |
| 21.1 | 6099 | 2.1 | 69.78 | B163 | TP/TBP160LA4 | 80000 | 65000 |

# 5.1 B/BA MOTORIDUTTORE (50Hz)



## 15.00 kW

| n2 [rpm] | M2 [Nm] | fs | i | Riduttore | Motore | Fr2 D-S-P [N] | Fr2 C [N] |
|---|---|---|---|---|---|---|---|
| 20.7 | 6219 | 1.3 | 71.15 | B153 | TP/TBP160LA4 | 63449 | 63449 |
| 20.6 | 6316 | 1.3 | 47.53 | B153 | TP/TBP180L6 | 63440 | 63440 |
| 19.4 | 6718 | 1.3 | 50.56 | B153 | TP/TBP180L6 | 64347 | 64347 |
| 19.2 | 6706 | 1.9 | 76.72 | B163 | TP/TBP160LA4 | 80000 | 65000 |
| 19.2 | 6776 | 2.0 | 51.00 | B163 | TP/TBP180L6 | 80000 | 65000 |
| 19.1 | 6750 | 1.2 | 77.22 | B153 | TP/TBP160LA4 | 64660 | 64660 |
| 18.3 | 7126 | 1.9 | 53.63 | B163 | TP/TBP180L6 | 80000 | 65000 |
| 17.9 | 7260 | 1.2 | 54.64 | B153 | TP/TBP180L6 | 65000 | 65000 |
| 17.6 | 7332 | 1.1 | 83.89 | B153 | TP/TBP160LA4 | 65000 | 65000 |
| 17.1 | 7610 | 1.1 | 57.27 | B153 | TP/TBP180L6 | 65000 | 65000 |
| 16.9 | 7651 | 1.7 | 87.54 | B163 | TP/TBP160LA4 | 80000 | 65000 |
| 16.8 | 7661 | 1.0 | 87.65 | B153 | TP/TBP160LA4 | 65000 | 65000 |
| 16.6 | 7835 | 1.7 | 58.97 | B163 | TP/TBP180L6 | 80000 | 65000 |
| 16.1 | 8095 | 1.0 | 60.92 | B153 | TP/TBP180L6 | 65000 | 65000 |
| 15.9 | 8133 | 1.0 | 93.05 | B153 | TP/TBP160LA4 | 65000 | 65000 |
| 15.4 | 8434 | 1.0 | 63.47 | B153 | TP/TBP180L6 | 65000 | 65000 |
| 15.3 | 8413 | 1.5 | 96.25 | B163 | TP/TBP160LA4 | 80000 | 65000 |
| 14.2 | 9084 | 1.4 | 103.93 | B163 | TP/TBP160LA4 | 80000 | 65000 |
| 14.0 | 9271 | 1.5 | 69.78 | B163 | TP/TBP180L6 | 80000 | 65000 |
| 12.9 | 9988 | 1.3 | 114.27 | B163 | TP/TBP160LA4 | 80000 | 65000 |
| 12.8 | 10194 | 1.3 | 76.72 | B163 | TP/TBP180L6 | 80000 | 65000 |
| 11.7 | 11038 | 1.2 | 126.29 | B163 | TP/TBP160LA4 | 80000 | 65000 |
| 11.2 | 11631 | 1.2 | 87.54 | B163 | TP/TBP180L6 | 80000 | 65000 |
| 10.6 | 12137 | 1.1 | 138.85 | B163 | TP/TBP160LA4 | 80000 | 65000 |
| 10.2 | 12788 | 1.1 | 96.25 | B163 | TP/TBP180L6 | 80000 | 65000 |
| 9.5 | 13533 | 1.0 | 154.83 | B163 | TP/TBP160LA4 | 80000 | 65000 |
| 9.4 | 13809 | 1.0 | 103.93 | B163 | TP/TBP180L6 | 80000 | 65000 |

## 18.50 kW

| n2 [rpm] | M2 [Nm] | fs | i | Riduttore | Motore | Fr2 D-S-P [N] | Fr2 C [N] |
|---|---|---|---|---|---|---|---|
| 184.5 | 862 | 1.7 | 7.97 | B123 | TP/TBP180M4 | 19856 | 5673 |
| 152.8 | 1041 | 1.7 | 9.62 | B123 | TP/TBP180M4 | 20563 | 5875 |
| 142.2 | 1118 | 1.8 | 10.33 | B123 | TP/TBP180M4 | 20814 | 5947 |
| 140.1 | 1135 | 4.0 | 10.49 | B153 | TP/TBP180M4 | 36966 | 36966 |
| 135.6 | 1172 | 2.6 | 10.84 | B143 | TP/TBP180M4 | 20959 | 20959 |
| 123.9 | 1284 | 2.4 | 11.87 | B143 | TP/TBP180M4 | 21354 | 21354 |
| 117.8 | 1350 | 1.5 | 12.48 | B123 | TP/TBP180M4 | 21414 | 6118 |
| 116.3 | 1367 | 3.3 | 12.64 | B153 | TP/TBP180M4 | 39075 | 39075 |
| 106.2 | 1498 | 1.4 | 13.84 | B123 | TP/TBP180M4 | 21698 | 6200 |
| 104.9 | 1515 | 3.3 | 14.01 | B153 | TP/TBP180M4 | 40275 | 40275 |

# 5.1 B/BA MOTORIDUTTORE (50Hz)



## 18.50 kW

| n2 [rpm] | M2 [Nm] | fs | i | Riduttore | Motore | Fr2 D-S-P [N] | Fr2 C [N] |
|---|---|---|---|---|---|---|---|
| 101.5 | 1567 | 2.0 | 14.49 | B143 | TP/TBP180M4 | 22181 | 22181 |
| 95.6 | 1664 | 1.3 | 15.38 | B123 | TP/TBP180M4 | 21945 | 6270 |
| 95.5 | 1666 | 3.0 | 15.40 | B153 | TP/TBP180M4 | 41402 | 41402 |
| 93.4 | 1719 | 2.7 | 10.49 | B153 | TP/TBP200LA6 | 41639 | 41639 |
| 90.4 | 1776 | 1.8 | 10.84 | B143 | TP/TBP200LA6 | 22569 | 22569 |
| 86.3 | 1843 | 1.7 | 17.04 | B143 | TP/TBP180M4 | 22796 | 22796 |
| 82.6 | 1945 | 1.7 | 11.87 | B143 | TP/TBP200LA6 | 22889 | 22889 |
| 79.2 | 2007 | 3.0 | 18.56 | B153 | TP/TBP180M4 | 43683 | 43683 |
| 79.1 | 2009 | 1.1 | 18.58 | B123 | TP/TBP180M4 | 22258 | 6359 |
| 78.8 | 2018 | 1.8 | 18.66 | B143 | TP/TBP180M4 | 23109 | 23109 |
| 77.5 | 2072 | 2.3 | 12.64 | B153 | TP/TBP200LA6 | 43924 | 43924 |
| 71.5 | 2224 | 2.9 | 20.56 | B153 | TP/TBP180M4 | 44973 | 44973 |
| 71.3 | 2229 | 1.1 | 20.61 | B123 | TP/TBP180M4 | 22345 | 6384 |
| 70.0 | 2271 | 1.8 | 21.00 | B143 | TP/TBP180M4 | 23476 | 23476 |
| 69.9 | 2296 | 2.3 | 14.01 | B153 | TP/TBP200LA6 | 45215 | 45215 |
| 67.7 | 2374 | 1.4 | 14.49 | B143 | TP/TBP200LA6 | 23498 | 23498 |
| 64.6 | 2463 | 1.8 | 22.77 | B143 | TP/TBP180M4 | 23698 | 23698 |
| 64.5 | 2464 | 1.1 | 22.78 | B123 | TP/TBP180M4 | 22361 | 6389 |
| 63.6 | 2524 | 2.1 | 15.40 | B153 | TP/TBP200LA6 | 46421 | 46421 |
| 61.6 | 2581 | 2.6 | 23.86 | B153 | TP/TBP180M4 | 46874 | 46874 |
| 59.8 | 2685 | 3.9 | 16.39 | B163 | TP/TBP200LA6 | 75172 | 65000 |
| 58.4 | 2724 | 2.5 | 25.19 | B153 | TP/TBP180M4 | 47578 | 47578 |
| 57.5 | 2793 | 1.2 | 17.04 | B143 | TP/TBP200LA6 | 23873 | 23873 |
| 57.4 | 2772 | 1.7 | 25.63 | B143 | TP/TBP180M4 | 23967 | 23967 |
| 56.8 | 2800 | 1.0 | 25.89 | B123 | TP/TBP180M4 | 22268 | 6362 |
| 55.3 | 2875 | 3.9 | 26.58 | B163 | TP/TBP180M4 | 76928 | 65000 |
| 54.4 | 2952 | 3.7 | 18.02 | B163 | TP/TBP200LA6 | 77244 | 65000 |
| 53.6 | 2968 | 1.5 | 27.44 | B143 | TP/TBP180M4 | 24090 | 24090 |
| 53.4 | 2976 | 0.9 | 27.51 | B123 | TP/TBP180M4 | 22173 | 6335 |
| 52.8 | 3041 | 2.1 | 18.56 | B153 | TP/TBP200LA6 | 48842 | 48842 |
| 52.5 | 3057 | 1.2 | 18.66 | B143 | TP/TBP200LA6 | 24024 | 24024 |
| 52.1 | 3054 | 2.6 | 28.23 | B153 | TP/TBP180M4 | 49073 | 49073 |
| 51.0 | 3115 | 3.3 | 28.80 | B163 | TP/TBP180M4 | 78709 | 65000 |
| 49.1 | 3270 | 3.4 | 19.96 | B163 | TP/TBP200LA6 | 79518 | 65000 |
| 48.9 | 3250 | 1.4 | 30.05 | B143 | TP/TBP180M4 | 24210 | 24210 |
| 48.4 | 3283 | 2.4 | 30.35 | B153 | TP/TBP180M4 | 50031 | 50031 |
| 47.7 | 3370 | 2.0 | 20.56 | B153 | TP/TBP200LA6 | 50198 | 50198 |
| 47.5 | 3345 | 3.4 | 30.92 | B163 | TP/TBP180M4 | 80000 | 65000 |
| 46.7 | 3441 | 1.2 | 21.00 | B143 | TP/TBP200LA6 | 24143 | 24143 |
| 44.7 | 3596 | 3.0 | 21.94 | B163 | TP/TBP200LA6 | 80000 | 65000 |
| 44.5 | 3571 | 1.3 | 33.01 | B143 | TP/TBP180M4 | 24278 | 24278 |

# 5.1 B/BA MOTORIDUTTORE (50Hz)



## 18.50 kW

| n2 [rpm] | M2 [Nm] | fs | i | Riduttore | Motore | Fr2 D-S-P [N] | Fr2 C [N] |
|---|---|---|---|---|---|---|---|
| 43.7 | 3638 | 2.2 | 33.63 | B153 | TP/TBP180M4 | 51401 | 51401 |
| 43.0 | 3732 | 1.2 | 22.77 | B143 | TP/TBP200LA6 | 24169 | 24169 |
| 42.9 | 3705 | 3.2 | 34.25 | B163 | TP/TBP180M4 | 80000 | 65000 |
| 42.0 | 3788 | 2.1 | 35.02 | B153 | TP/TBP180M4 | 51942 | 51942 |
| 41.1 | 3910 | 1.8 | 23.86 | B153 | TP/TBP200LA6 | 52177 | 52177 |
| 40.5 | 3961 | 2.8 | 24.17 | B163 | TP/TBP200LA6 | 80000 | 65000 |
| 40.1 | 3967 | 1.2 | 36.67 | B143 | TP/TBP180M4 | 24274 | 24274 |
| 39.0 | 4074 | 3.0 | 37.66 | B163 | TP/TBP180M4 | 80000 | 65000 |
| 38.9 | 4128 | 1.7 | 25.19 | B153 | TP/TBP200LA6 | 52903 | 52903 |
| 38.2 | 4200 | 1.2 | 25.63 | B143 | TP/TBP200LA6 | 24110 | 24110 |
| 37.9 | 4198 | 1.9 | 38.81 | B153 | TP/TBP180M4 | 53324 | 53324 |
| 36.9 | 4355 | 2.7 | 26.58 | B163 | TP/TBP200LA6 | 80000 | 65000 |
| 36.5 | 4358 | 1.1 | 40.29 | B143 | TP/TBP180M4 | 24190 | 24190 |
| 36.2 | 4397 | 2.9 | 40.65 | B163 | TP/TBP180M4 | 80000 | 65000 |
| 35.7 | 4497 | 1.1 | 27.44 | B143 | TP/TBP200LA6 | 24018 | 24018 |
| 34.8 | 4575 | 1.7 | 42.30 | B153 | TP/TBP180M4 | 54484 | 54484 |
| 34.7 | 4626 | 1.8 | 28.23 | B153 | TP/TBP200LA6 | 54433 | 54433 |
| 34.0 | 4720 | 2.3 | 28.80 | B163 | TP/TBP200LA6 | 80000 | 65000 |
| 33.3 | 4777 | 1.0 | 44.16 | B143 | TP/TBP180M4 | 24025 | 24025 |
| 32.6 | 4924 | 1.0 | 30.05 | B143 | TP/TBP200LA6 | 23821 | 23821 |
| 32.6 | 4877 | 2.5 | 45.09 | B163 | TP/TBP180M4 | 80000 | 65000 |
| 32.3 | 4973 | 1.7 | 30.35 | B153 | TP/TBP200LA6 | 55403 | 55403 |
| 31.7 | 5068 | 2.4 | 30.92 | B163 | TP/TBP200LA6 | 80000 | 65000 |
| 30.9 | 5142 | 1.6 | 47.53 | B153 | TP/TBP180M4 | 56057 | 56057 |
| 30.4 | 5230 | 1.0 | 48.35 | B143 | TP/TBP180M4 | 23772 | 23772 |
| 29.7 | 5409 | 0.9 | 33.01 | B143 | TP/TBP200LA6 | 23518 | 23518 |
| 29.1 | 5512 | 1.5 | 33.63 | B153 | TP/TBP200LA6 | 56776 | 56776 |
| 29.1 | 5469 | 1.5 | 50.56 | B153 | TP/TBP180M4 | 56886 | 56886 |
| 28.8 | 5517 | 2.4 | 51.00 | B163 | TP/TBP180M4 | 80000 | 65000 |
| 28.6 | 5613 | 2.2 | 34.25 | B163 | TP/TBP200LA6 | 80000 | 65000 |
| 28.0 | 5738 | 1.5 | 35.02 | B153 | TP/TBP200LA6 | 57313 | 57313 |
| 27.4 | 5801 | 2.2 | 53.63 | B163 | TP/TBP180M4 | 80000 | 65000 |
| 26.9 | 5910 | 1.4 | 54.64 | B153 | TP/TBP180M4 | 57922 | 57922 |
| 26.0 | 6172 | 2.1 | 37.66 | B163 | TP/TBP200LA6 | 80000 | 65000 |
| 25.7 | 6195 | 1.3 | 57.27 | B153 | TP/TBP180M4 | 58546 | 58546 |
| 25.3 | 6360 | 1.3 | 38.81 | B153 | TP/TBP200LA6 | 58669 | 58669 |
| 24.9 | 6378 | 2.0 | 58.97 | B163 | TP/TBP180M4 | 80000 | 65000 |
| 24.1 | 6590 | 1.2 | 60.92 | B153 | TP/TBP180M4 | 59360 | 59360 |
| 24.1 | 6662 | 2.0 | 40.65 | B163 | TP/TBP200LA6 | 80000 | 65000 |
| 23.2 | 6931 | 1.2 | 42.30 | B153 | TP/TBP200LA6 | 59789 | 59789 |
| 23.2 | 6866 | 1.2 | 63.47 | B153 | TP/TBP180M4 | 59896 | 59896 |

# 5.1 B/BA MOTORIDUTTORE (50Hz)



## 18.50 kW

| n2 [rpm] | M2 [Nm] | fs | i | Riduttore | Motore | Fr2 D-S-P [N] | Fr2 C [N] |
|---|---|---|---|---|---|---|---|
| 21.7 | 7389 | 1.7 | 45.09 | B163 | TP/TBP200LA6 | 80000 | 65000 |
| 21.1 | 7547 | 1.7 | 69.78 | B163 | TP/TBP180M4 | 80000 | 65000 |
| 20.7 | 7696 | 1.0 | 71.15 | B153 | TP/TBP180M4 | 61364 | 61364 |
| 20.6 | 7789 | 1.1 | 47.53 | B153 | TP/TBP200LA6 | 61278 | 61278 |
| 19.4 | 8286 | 1.0 | 50.56 | B153 | TP/TBP200LA6 | 62047 | 62047 |
| 19.2 | 8298 | 1.6 | 76.72 | B163 | TP/TBP180M4 | 80000 | 65000 |
| 19.2 | 8358 | 1.6 | 51.00 | B163 | TP/TBP200LA6 | 80000 | 65000 |
| 19.0 | 8353 | 1.0 | 77.22 | B153 | TP/TBP180M4 | 62391 | 62391 |
| 18.3 | 8788 | 1.6 | 53.63 | B163 | TP/TBP200LA6 | 80000 | 65000 |
| 17.9 | 8954 | 0.9 | 54.64 | B153 | TP/TBP200LA6 | 62991 | 62991 |
| 16.8 | 9469 | 1.4 | 87.54 | B163 | TP/TBP180M4 | 80000 | 65000 |
| 16.6 | 9663 | 1.4 | 58.97 | B163 | TP/TBP200LA6 | 80000 | 65000 |
| 15.3 | 10411 | 1.2 | 96.25 | B163 | TP/TBP180M4 | 80000 | 65000 |
| 14.1 | 11242 | 1.2 | 103.93 | B163 | TP/TBP180M4 | 80000 | 65000 |
| 14.0 | 11434 | 1.2 | 69.78 | B163 | TP/TBP200LA6 | 80000 | 65000 |
| 12.9 | 12361 | 1.1 | 114.27 | B163 | TP/TBP180M4 | 80000 | 65000 |
| 12.8 | 12572 | 1.1 | 76.72 | B163 | TP/TBP200LA6 | 80000 | 65000 |
| 11.6 | 13660 | 1.0 | 126.29 | B163 | TP/TBP180M4 | 80000 | 65000 |
| 11.2 | 14345 | 1.0 | 87.54 | B163 | TP/TBP200LA6 | 80000 | 65000 |

## 22.00 kW

| n2 [rpm] | M2 [Nm] | fs | i | Riduttore | Motore | Fr2 D-S-P [N] | Fr2 C [N] |
|---|---|---|---|---|---|---|---|
| 184.5 | 1025 | 1.5 | 7.97 | B123 | TP/TBP180L4 | 19106 | 5459 |
| 152.8 | 1237 | 1.5 | 9.62 | B123 | TP/TBP180L4 | 19658 | 5617 |
| 142.2 | 1329 | 1.5 | 10.33 | B123 | TP/TBP180L4 | 19842 | 5669 |
| 140.1 | 1350 | 3.3 | 10.49 | B153 | TP/TBP180L4 | 36651 | 36651 |
| 135.6 | 1394 | 2.2 | 10.84 | B143 | TP/TBP180L4 | 20251 | 20251 |
| 123.9 | 1527 | 2.0 | 11.87 | B143 | TP/TBP180L4 | 20579 | 20579 |
| 117.8 | 1605 | 1.2 | 12.48 | B123 | TP/TBP180L4 | 20241 | 5783 |
| 116.3 | 1626 | 2.8 | 12.64 | B153 | TP/TBP180L4 | 38696 | 38696 |
| 106.2 | 1781 | 1.2 | 13.84 | B123 | TP/TBP180L4 | 20396 | 5827 |
| 104.9 | 1802 | 2.8 | 14.01 | B153 | TP/TBP180L4 | 39855 | 39855 |
| 101.5 | 1863 | 1.7 | 14.49 | B143 | TP/TBP180L4 | 21235 | 21235 |
| 95.6 | 1979 | 1.1 | 15.38 | B123 | TP/TBP180L4 | 20498 | 5856 |
| 95.5 | 1981 | 2.5 | 15.40 | B153 | TP/TBP180L4 | 40939 | 40939 |
| 93.4 | 2045 | 2.3 | 10.49 | B153 | TP/TBP200LB6 | 41162 | 41162 |
| 90.4 | 2112 | 1.5 | 10.84 | B143 | TP/TBP200LB6 | 21497 | 21497 |
| 86.3 | 2192 | 1.5 | 17.04 | B143 | TP/TBP180L4 | 21684 | 21684 |
| 82.6 | 2313 | 1.4 | 11.87 | B143 | TP/TBP200LB6 | 21715 | 21715 |
| 82.6 | 2313 | 3.5 | 11.87 | B163 | TP/TBP200LB6 | 67760 | 65000 |

# 5.1 B/BA MOTORIDUTTORE (50Hz)



## 22.00 kW

| n2 [rpm] | M2 [Nm] | fs | i | Riduttore | Motore | Fr2 D-S-P [N] | Fr2 C [N] |
|---|---|---|---|---|---|---|---|
| 79.2 | 2387 | 2.5 | 18.56 | B153 | TP/TBP180L4 | 43126 | 43126 |
| 79.1 | 2389 | 0.9 | 18.58 | B123 | TP/TBP180L4 | 20510 | 5860 |
| 78.8 | 2400 | 1.5 | 18.66 | B143 | TP/TBP180L4 | 21891 | 21891 |
| 77.5 | 2464 | 1.9 | 12.64 | B153 | TP/TBP200LB6 | 43349 | 43349 |
| 76.5 | 2496 | 3.7 | 12.81 | B163 | TP/TBP200LB6 | 69268 | 65000 |
| 71.5 | 2645 | 2.5 | 20.56 | B153 | TP/TBP180L4 | 44355 | 44355 |
| 71.3 | 2651 | 0.9 | 20.61 | B123 | TP/TBP180L4 | 20406 | 5830 |
| 70.0 | 2701 | 1.5 | 21.00 | B143 | TP/TBP180L4 | 22105 | 22105 |
| 69.9 | 2730 | 1.9 | 14.01 | B153 | TP/TBP200LB6 | 44578 | 44578 |
| 69.6 | 2745 | 3.7 | 14.08 | B163 | TP/TBP200LB6 | 71175 | 65000 |
| 67.7 | 2823 | 1.2 | 14.49 | B143 | TP/TBP200LB6 | 22065 | 22065 |
| 67.0 | 2823 | 3.7 | 21.94 | B163 | TP/TBP180L4 | 71998 | 65000 |
| 64.6 | 2929 | 1.5 | 22.77 | B143 | TP/TBP180L4 | 22211 | 22211 |
| 64.5 | 2930 | 1.0 | 22.78 | B123 | TP/TBP180L4 | 20218 | 5777 |
| 63.6 | 3001 | 1.7 | 15.40 | B153 | TP/TBP200LB6 | 45720 | 45720 |
| 63.1 | 3025 | 3.5 | 15.52 | B163 | TP/TBP200LB6 | 73163 | 65000 |
| 61.6 | 3069 | 2.2 | 23.86 | B153 | TP/TBP180L4 | 46158 | 46158 |
| 60.8 | 3109 | 3.4 | 24.17 | B163 | TP/TBP180L4 | 73993 | 65000 |
| 59.8 | 3193 | 3.3 | 16.39 | B163 | TP/TBP200LB6 | 74284 | 65000 |
| 58.4 | 3240 | 2.1 | 25.19 | B153 | TP/TBP180L4 | 46821 | 46821 |
| 57.5 | 3321 | 1.0 | 17.04 | B143 | TP/TBP200LB6 | 22188 | 22188 |
| 57.4 | 3297 | 1.4 | 25.63 | B143 | TP/TBP180L4 | 22294 | 22294 |
| 55.3 | 3419 | 3.2 | 26.58 | B163 | TP/TBP180L4 | 75978 | 65000 |
| 54.4 | 3511 | 3.1 | 18.02 | B163 | TP/TBP200LB6 | 76268 | 65000 |
| 53.6 | 3530 | 1.3 | 27.44 | B143 | TP/TBP180L4 | 22298 | 22298 |
| 52.8 | 3616 | 1.7 | 18.56 | B153 | TP/TBP200LB6 | 47998 | 47998 |
| 52.5 | 3636 | 1.0 | 18.66 | B143 | TP/TBP200LB6 | 22178 | 22178 |
| 52.1 | 3631 | 2.2 | 28.23 | B153 | TP/TBP180L4 | 48226 | 48226 |
| 51.0 | 3705 | 2.8 | 28.80 | B163 | TP/TBP180L4 | 77679 | 65000 |
| 49.1 | 3889 | 2.9 | 19.96 | B163 | TP/TBP200LB6 | 78437 | 65000 |
| 48.9 | 3865 | 1.2 | 30.05 | B143 | TP/TBP180L4 | 22249 | 22249 |
| 48.4 | 3904 | 2.0 | 30.35 | B153 | TP/TBP180L4 | 49120 | 49120 |
| 47.7 | 4007 | 1.7 | 20.56 | B153 | TP/TBP200LB6 | 49263 | 49263 |
| 47.5 | 3978 | 2.9 | 30.92 | B163 | TP/TBP180L4 | 79200 | 65000 |
| 46.7 | 4092 | 1.0 | 21.00 | B143 | TP/TBP200LB6 | 22067 | 22067 |
| 44.7 | 4276 | 2.6 | 21.94 | B163 | TP/TBP200LB6 | 80000 | 65000 |
| 44.5 | 4246 | 1.1 | 33.01 | B143 | TP/TBP180L4 | 22123 | 22123 |
| 43.7 | 4326 | 1.8 | 33.63 | B153 | TP/TBP180L4 | 50392 | 50392 |
| 43.0 | 4438 | 1.0 | 22.77 | B143 | TP/TBP200LB6 | 21916 | 21916 |
| 42.9 | 4406 | 2.7 | 34.25 | B163 | TP/TBP180L4 | 80000 | 65000 |
| 42.0 | 4504 | 1.8 | 35.02 | B153 | TP/TBP180L4 | 50891 | 50891 |

# 5.1 B/BA MOTORIDUTTORE (50Hz)



## 22.00 kW

| n2 [rpm] | M2 [Nm] | fs | i | Riduttore | Motore | Fr2 D-S-P [N] | Fr2 C [N] |
|---|---|---|---|---|---|---|---|
| 41.1 | 4649 | 1.5 | 23.86 | B153 | TP/TBP200LB6 | 51092 | 51092 |
| 40.5 | 4711 | 2.3 | 24.17 | B163 | TP/TBP200LB6 | 80000 | 65000 |
| 40.1 | 4717 | 1.0 | 36.67 | B143 | TP/TBP180L4 | 21880 | 21880 |
| 39.0 | 4845 | 2.5 | 37.66 | B163 | TP/TBP180L4 | 80000 | 65000 |
| 38.9 | 4908 | 1.5 | 25.19 | B153 | TP/TBP200LB6 | 51758 | 51758 |
| 38.2 | 4994 | 1.0 | 25.63 | B143 | TP/TBP200LB6 | 21575 | 21575 |
| 37.9 | 4992 | 1.6 | 38.81 | B153 | TP/TBP180L4 | 52159 | 52159 |
| 36.9 | 5179 | 2.3 | 26.58 | B163 | TP/TBP200LB6 | 80000 | 65000 |
| 36.5 | 5183 | 0.9 | 40.29 | B143 | TP/TBP180L4 | 21560 | 21560 |
| 36.2 | 5229 | 2.4 | 40.65 | B163 | TP/TBP180L4 | 80000 | 65000 |
| 35.7 | 5348 | 0.9 | 27.44 | B143 | TP/TBP200LB6 | 21303 | 21303 |
| 34.8 | 5441 | 1.5 | 42.30 | B153 | TP/TBP180L4 | 53215 | 53215 |
| 34.7 | 5502 | 1.5 | 28.23 | B153 | TP/TBP200LB6 | 53149 | 53149 |
| 34.0 | 5612 | 1.9 | 28.80 | B163 | TP/TBP200LB6 | 80000 | 65000 |
| 32.6 | 5800 | 2.1 | 45.09 | B163 | TP/TBP180L4 | 80000 | 65000 |
| 32.3 | 5914 | 1.4 | 30.35 | B153 | TP/TBP200LB6 | 54023 | 54023 |
| 31.7 | 6026 | 2.0 | 30.92 | B163 | TP/TBP200LB6 | 80000 | 65000 |
| 30.9 | 6114 | 1.3 | 47.53 | B153 | TP/TBP180L4 | 54630 | 54630 |
| 29.1 | 6554 | 1.3 | 33.63 | B153 | TP/TBP200LB6 | 55246 | 55246 |
| 29.1 | 6504 | 1.2 | 50.56 | B153 | TP/TBP180L4 | 55368 | 55368 |
| 28.8 | 6560 | 2.0 | 51.00 | B163 | TP/TBP180L4 | 80000 | 65000 |
| 28.6 | 6675 | 1.9 | 34.25 | B163 | TP/TBP200LB6 | 80000 | 65000 |
| 28.0 | 6824 | 1.2 | 35.02 | B153 | TP/TBP200LB6 | 55720 | 55720 |
| 27.4 | 6898 | 1.9 | 53.63 | B163 | TP/TBP180L4 | 80000 | 65000 |
| 26.9 | 7029 | 1.1 | 54.64 | B153 | TP/TBP180L4 | 56282 | 56282 |
| 26.0 | 7339 | 1.8 | 37.66 | B163 | TP/TBP200LB6 | 80000 | 65000 |
| 25.7 | 7367 | 1.1 | 57.27 | B153 | TP/TBP180L4 | 56827 | 56827 |
| 25.3 | 7563 | 1.1 | 38.81 | B153 | TP/TBP200LB6 | 56904 | 56904 |
| 24.9 | 7585 | 1.7 | 58.97 | B163 | TP/TBP180L4 | 80000 | 65000 |
| 24.1 | 7837 | 1.0 | 60.92 | B153 | TP/TBP180L4 | 57531 | 57531 |
| 24.1 | 7922 | 1.7 | 40.65 | B163 | TP/TBP200LB6 | 80000 | 65000 |
| 23.2 | 8242 | 1.0 | 42.30 | B153 | TP/TBP200LB6 | 57866 | 57866 |
| 23.2 | 8164 | 1.0 | 63.47 | B153 | TP/TBP180L4 | 57990 | 57990 |
| 21.7 | 8787 | 1.4 | 45.09 | B163 | TP/TBP200LB6 | 80000 | 65000 |
| 21.1 | 8975 | 1.4 | 69.78 | B163 | TP/TBP180L4 | 80000 | 65000 |
| 20.6 | 9263 | 0.9 | 47.53 | B153 | TP/TBP200LB6 | 59116 | 59116 |
| 19.2 | 9868 | 1.3 | 76.72 | B163 | TP/TBP180L4 | 80000 | 65000 |
| 19.2 | 9939 | 1.4 | 51.00 | B163 | TP/TBP200LB6 | 80000 | 65000 |
| 18.3 | 10451 | 1.3 | 53.63 | B163 | TP/TBP200LB6 | 80000 | 65000 |
| 16.8 | 11260 | 1.2 | 87.54 | B163 | TP/TBP180L4 | 80000 | 65000 |
| 16.6 | 11491 | 1.2 | 58.97 | B163 | TP/TBP200LB6 | 80000 | 65000 |

# 5.1 B/BA MOTORIDUTTORE (50Hz)



## 22.00 kW

| n2 [rpm] | M2 [Nm] | fs | i | Riduttore | Motore | Fr2 D-S-P [N] | Fr2 C [N] |
|---|---|---|---|---|---|---|---|
| 15.3 | 12380 | 1.1 | 96.25 | B163 | TP/TBP180L4 | 80000 | 65000 |
| 14.1 | 13369 | 1.0 | 103.93 | B163 | TP/TBP180L4 | 80000 | 65000 |
| 14.0 | 13598 | 1.0 | 69.78 | B163 | TP/TBP200LB6 | 80000 | 65000 |
| 12.8 | 14951 | 0.9 | 76.72 | B163 | TP/TBP200LB6 | 80000 | 65000 |

## 30.00 kW

| n2 [rpm] | M2 [Nm] | fs | i | Riduttore | Motore | Fr2 D-S-P [N] | Fr2 C [N] |
|---|---|---|---|---|---|---|---|
| 140.6 | 1834 | 2.5 | 10.49 | B153 | TP/TBP200L4 | 35897 | 35897 |
| 136.1 | 1895 | 1.6 | 10.84 | B143 | TP/TBP200L4 | 18627 | 18627 |
| 124.3 | 2075 | 1.5 | 11.87 | B143 | TP/TBP200L4 | 18802 | 18802 |
| 124.3 | 2075 | 3.7 | 11.87 | B163 | TP/TBP200L4 | 59114 | 59114 |
| 116.7 | 2210 | 2.0 | 12.64 | B153 | TP/TBP200L4 | 37793 | 37793 |
| 115.2 | 2239 | 3.9 | 12.81 | B163 | TP/TBP200L4 | 60424 | 60424 |
| 105.3 | 2449 | 2.0 | 14.01 | B153 | TP/TBP200L4 | 38858 | 38858 |
| 104.7 | 2462 | 3.9 | 14.08 | B163 | TP/TBP200L4 | 62080 | 62080 |
| 101.8 | 2532 | 1.2 | 14.49 | B143 | TP/TBP200L4 | 19071 | 19071 |
| 95.8 | 2692 | 1.9 | 15.40 | B153 | TP/TBP200L4 | 39847 | 39847 |
| 95.0 | 2713 | 3.7 | 15.52 | B163 | TP/TBP200L4 | 63806 | 63806 |
| 90.0 | 2864 | 3.5 | 16.39 | B163 | TP/TBP200L4 | 64778 | 64778 |
| 86.6 | 2979 | 1.1 | 17.04 | B143 | TP/TBP200L4 | 19141 | 19141 |
| 81.9 | 3149 | 3.3 | 18.02 | B163 | TP/TBP200L4 | 66499 | 65000 |
| 79.5 | 3244 | 1.8 | 18.56 | B153 | TP/TBP200L4 | 41817 | 41817 |
| 79.1 | 3262 | 1.1 | 18.66 | B143 | TP/TBP200L4 | 19109 | 19109 |
| 73.9 | 3489 | 3.1 | 19.96 | B163 | TP/TBP200L4 | 68378 | 65000 |
| 71.7 | 3595 | 1.8 | 20.56 | B153 | TP/TBP200L4 | 42908 | 42908 |
| 70.2 | 3670 | 1.1 | 21.00 | B143 | TP/TBP200L4 | 18978 | 18978 |
| 67.2 | 3836 | 2.7 | 21.94 | B163 | TP/TBP200L4 | 70141 | 65000 |
| 64.8 | 3981 | 1.1 | 22.77 | B143 | TP/TBP200L4 | 18821 | 18821 |
| 61.8 | 4171 | 1.6 | 23.86 | B153 | TP/TBP200L4 | 44485 | 44485 |
| 61.0 | 4226 | 2.5 | 24.17 | B163 | TP/TBP200L4 | 71953 | 65000 |
| 58.6 | 4403 | 1.5 | 25.19 | B153 | TP/TBP200L4 | 45057 | 45057 |
| 57.6 | 4480 | 1.0 | 25.63 | B143 | TP/TBP200L4 | 18481 | 18481 |
| 55.5 | 4646 | 2.4 | 26.58 | B163 | TP/TBP200L4 | 73741 | 65000 |
| 53.7 | 4797 | 1.0 | 27.44 | B143 | TP/TBP200L4 | 18218 | 18218 |
| 52.2 | 4935 | 1.6 | 28.23 | B153 | TP/TBP200L4 | 46253 | 46253 |
| 51.2 | 5035 | 2.0 | 28.80 | B163 | TP/TBP200L4 | 75261 | 65000 |
| 48.6 | 5305 | 1.5 | 30.35 | B153 | TP/TBP200L4 | 47002 | 47002 |
| 47.7 | 5406 | 2.1 | 30.92 | B163 | TP/TBP200L4 | 76609 | 65000 |
| 43.9 | 5879 | 1.4 | 33.63 | B153 | TP/TBP200L4 | 48050 | 48050 |
| 43.1 | 5988 | 2.0 | 34.25 | B163 | TP/TBP200L4 | 78546 | 65000 |

# 5.1 B/BA MOTORIDUTTORE (50Hz)



## 30.00 kW

| n2 [rpm] | M2 [Nm] | fs | i | Riduttore | Motore | Fr2 D-S-P [N] | Fr2 C [N] |
|---|---|---|---|---|---|---|---|
| 42.1 | 6122 | 1.3 | 35.02 | B153 | TP/TBP200L4 | 48454 | 48454 |
| 39.2 | 6584 | 1.9 | 37.66 | B163 | TP/TBP200L4 | 80000 | 65000 |
| 38.0 | 6784 | 1.2 | 38.81 | B153 | TP/TBP200L4 | 49463 | 49463 |
| 36.3 | 7107 | 1.8 | 40.65 | B163 | TP/TBP200L4 | 80000 | 65000 |
| 34.9 | 7394 | 1.1 | 42.30 | B153 | TP/TBP200L4 | 50281 | 50281 |
| 32.7 | 7883 | 1.5 | 45.09 | B163 | TP/TBP200L4 | 80000 | 65000 |
| 31.0 | 8309 | 1.0 | 47.53 | B153 | TP/TBP200L4 | 51338 | 51338 |
| 29.2 | 8839 | 0.9 | 50.56 | B153 | TP/TBP200L4 | 51870 | 51870 |
| 28.9 | 8915 | 1.5 | 51.00 | B163 | TP/TBP200L4 | 80000 | 65000 |
| 27.5 | 9375 | 1.4 | 53.63 | B163 | TP/TBP200L4 | 80000 | 65000 |
| 25.0 | 10308 | 1.3 | 58.97 | B163 | TP/TBP200L4 | 80000 | 65000 |
| 21.1 | 12198 | 1.1 | 69.78 | B163 | TP/TBP200L4 | 80000 | 65000 |
| 19.2 | 13411 | 1.0 | 76.72 | B163 | TP/TBP200L4 | 80000 | 65000 |

## 37.00 kW

| n2 [rpm] | M2 [Nm] | fs | i | Riduttore | Motore | Fr2 D-S-P [N] | Fr2 C [N] |
|---|---|---|---|---|---|---|---|
| 167.0 | 1904 | 3.6 | 8.89 | B163 | TP/TBP225S4 | 53581 | 53581 |
| 141.5 | 2247 | 2.0 | 10.49 | B153 | TP/TBP225S4 | 35205 | 35205 |
| 140.4 | 2265 | 3.5 | 10.58 | B163 | TP/TBP225S4 | 56303 | 56303 |
| 125.1 | 2542 | 3.0 | 11.87 | B163 | TP/TBP225S4 | 58158 | 58158 |
| 117.5 | 2707 | 1.7 | 12.64 | B153 | TP/TBP225S4 | 36972 | 36972 |
| 115.9 | 2743 | 3.2 | 12.81 | B163 | TP/TBP225S4 | 59400 | 59400 |
| 106.0 | 3000 | 1.7 | 14.01 | B153 | TP/TBP225S4 | 37955 | 37955 |
| 105.4 | 3016 | 3.2 | 14.08 | B163 | TP/TBP225S4 | 60964 | 60964 |
| 96.4 | 3298 | 1.5 | 15.40 | B153 | TP/TBP225S4 | 38861 | 38861 |
| 95.7 | 3324 | 3.0 | 15.52 | B163 | TP/TBP225S4 | 62586 | 62586 |
| 90.6 | 3509 | 2.8 | 16.39 | B163 | TP/TBP225S4 | 63497 | 63497 |
| 82.4 | 3858 | 2.7 | 18.02 | B163 | TP/TBP225S4 | 65101 | 65000 |
| 80.0 | 3974 | 1.5 | 18.56 | B153 | TP/TBP225S4 | 40642 | 40642 |
| 74.4 | 4274 | 2.5 | 19.96 | B163 | TP/TBP225S4 | 66841 | 65000 |
| 72.2 | 4404 | 1.5 | 20.56 | B153 | TP/TBP225S4 | 41614 | 41614 |
| 67.7 | 4699 | 2.2 | 21.94 | B163 | TP/TBP225S4 | 68462 | 65000 |
| 62.2 | 5109 | 1.3 | 23.86 | B153 | TP/TBP225S4 | 42995 | 42995 |
| 61.4 | 5177 | 2.0 | 24.17 | B163 | TP/TBP225S4 | 70115 | 65000 |
| 59.0 | 5394 | 1.3 | 25.19 | B153 | TP/TBP225S4 | 43489 | 43489 |
| 55.9 | 5692 | 2.0 | 26.58 | B163 | TP/TBP225S4 | 71732 | 65000 |
| 52.6 | 6046 | 1.3 | 28.23 | B153 | TP/TBP225S4 | 44505 | 44505 |
| 51.6 | 6168 | 1.7 | 28.80 | B163 | TP/TBP225S4 | 73094 | 65000 |
| 48.9 | 6499 | 1.2 | 30.35 | B153 | TP/TBP225S4 | 45129 | 45129 |
| 48.0 | 6622 | 1.7 | 30.92 | B163 | TP/TBP225S4 | 74292 | 65000 |

# 5.1 B/BA MOTORIDUTTORE (50Hz)



## 37.00 kW

| n2 [rpm] | M2 [Nm] | fs | i | Riduttore | Motore | Fr2 D-S-P [N] | Fr2 C [N] |
|---|---|---|---|---|---|---|---|
| 44.2 | 7203 | 1.1 | 33.63 | B153 | TP/TBP225S4 | 45983 | 45983 |
| 43.4 | 7335 | 1.6 | 34.25 | B163 | TP/TBP225S4 | 75993 | 65000 |
| 42.4 | 7499 | 1.1 | 35.02 | B153 | TP/TBP225S4 | 46306 | 46306 |
| 39.4 | 8065 | 1.5 | 37.66 | B163 | TP/TBP225S4 | 77542 | 65000 |
| 38.3 | 8311 | 1.0 | 38.81 | B153 | TP/TBP225S4 | 47092 | 47092 |
| 36.5 | 8706 | 1.5 | 40.65 | B163 | TP/TBP225S4 | 78763 | 65000 |
| 32.9 | 9656 | 1.2 | 45.09 | B163 | TP/TBP225S4 | 80000 | 65000 |
| 29.1 | 10922 | 1.2 | 51.00 | B163 | TP/TBP225S4 | 80000 | 65000 |
| 27.7 | 11485 | 1.1 | 53.63 | B163 | TP/TBP225S4 | 80000 | 65000 |
| 25.2 | 12627 | 1.0 | 58.97 | B163 | TP/TBP225S4 | 80000 | 65000 |

## 45.00 kW

| n2 [rpm] | M2 [Nm] | fs | i | Riduttore | Motore | Fr2 D-S-P [N] | Fr2 C [N] |
|---|---|---|---|---|---|---|---|
| 167.0 | 2316 | 2.9 | 8.89 | B163 | TP/TBP225M4 | 52862 | 52862 |
| 141.5 | 2733 | 1.6 | 10.49 | B153 | TP/TBP225M4 | 34492 | 34492 |
| 140.4 | 2754 | 2.9 | 10.58 | B163 | TP/TBP225M4 | 55447 | 55447 |
| 125.1 | 3091 | 2.5 | 11.87 | B163 | TP/TBP225M4 | 57198 | 57198 |
| 117.5 | 3293 | 1.4 | 12.64 | B153 | TP/TBP225M4 | 36114 | 36114 |
| 115.9 | 3336 | 2.6 | 12.81 | B163 | TP/TBP225M4 | 58364 | 58364 |
| 106.0 | 3649 | 1.4 | 14.01 | B153 | TP/TBP225M4 | 37003 | 37003 |
| 105.4 | 3668 | 2.6 | 14.08 | B163 | TP/TBP225M4 | 59825 | 59825 |
| 96.4 | 4011 | 1.2 | 15.40 | B153 | TP/TBP225M4 | 37815 | 37815 |
| 95.7 | 4043 | 2.5 | 15.52 | B163 | TP/TBP225M4 | 61331 | 61331 |
| 90.6 | 4268 | 2.3 | 16.39 | B163 | TP/TBP225M4 | 62171 | 62171 |
| 82.4 | 4692 | 2.2 | 18.02 | B163 | TP/TBP225M4 | 63643 | 63643 |
| 80.0 | 4833 | 1.2 | 18.56 | B153 | TP/TBP225M4 | 39382 | 39382 |
| 74.4 | 5198 | 2.1 | 19.96 | B163 | TP/TBP225M4 | 65226 | 65000 |
| 72.2 | 5356 | 1.2 | 20.56 | B153 | TP/TBP225M4 | 40217 | 40217 |
| 67.7 | 5715 | 1.8 | 21.94 | B163 | TP/TBP225M4 | 66687 | 65000 |
| 62.2 | 6214 | 1.1 | 23.86 | B153 | TP/TBP225M4 | 41375 | 41375 |
| 61.4 | 6296 | 1.7 | 24.17 | B163 | TP/TBP225M4 | 68160 | 65000 |
| 59.0 | 6560 | 1.0 | 25.19 | B153 | TP/TBP225M4 | 41778 | 41778 |
| 55.9 | 6922 | 1.6 | 26.58 | B163 | TP/TBP225M4 | 69582 | 65000 |
| 52.6 | 7353 | 1.1 | 28.23 | B153 | TP/TBP225M4 | 42587 | 42587 |
| 51.6 | 7501 | 1.4 | 28.80 | B163 | TP/TBP225M4 | 70764 | 65000 |
| 48.9 | 7904 | 1.0 | 30.35 | B153 | TP/TBP225M4 | 43068 | 43068 |
| 48.0 | 8054 | 1.4 | 30.92 | B163 | TP/TBP225M4 | 71790 | 65000 |
| 44.2 | 8760 | 0.9 | 33.63 | B153 | TP/TBP225M4 | 43698 | 43698 |
| 43.4 | 8921 | 1.3 | 34.25 | B163 | TP/TBP225M4 | 73222 | 65000 |
| 39.4 | 9809 | 1.3 | 37.66 | B163 | TP/TBP225M4 | 74495 | 65000 |

# 5.1 B/BA MOTORIDUTTORE (50Hz)



## 45.00 kW

| n2 [rpm] | M2 [Nm] | fs | i | Riduttore | Motore | Fr2 D-S-P [N] | Fr2 C [N] |
|---|---|---|---|---|---|---|---|
| 36.5 | 10588 | 1.2 | 40.65 | B163 | TP/TBP225M4 | 75474 | 65000 |
| 32.9 | 11744 | 1.0 | 45.09 | B163 | TP/TBP225M4 | 76723 | 65000 |
| 29.1 | 13283 | 1.0 | 51.00 | B163 | TP/TBP225M4 | 78067 | 65000 |
| 27.7 | 13968 | 0.9 | 53.63 | B163 | TP/TBP225M4 | 78565 | 65000 |

## 55.00 kW

| n2 [rpm] | M2 [Nm] | fs | i | Riduttore | Motore | Fr2 D-S-P [N] | Fr2 C [N] |
|---|---|---|---|---|---|---|---|
| 167.0 | 2831 | 2.4 | 8.89 | B163 | TP/TBP250M4 | 51963 | 51963 |
| 140.4 | 3367 | 2.3 | 10.58 | B163 | TP/TBP250M4 | 54378 | 54378 |
| 125.1 | 3778 | 2.0 | 11.87 | B163 | TP/TBP250M4 | 55998 | 55998 |
| 115.9 | 4078 | 2.2 | 12.81 | B163 | TP/TBP250M4 | 57069 | 57069 |
| 105.4 | 4483 | 2.1 | 14.08 | B163 | TP/TBP250M4 | 58401 | 58401 |
| 95.7 | 4941 | 2.0 | 15.52 | B163 | TP/TBP250M4 | 59761 | 59761 |
| 90.6 | 5216 | 1.9 | 16.39 | B163 | TP/TBP250M4 | 60514 | 60514 |
| 82.4 | 5735 | 1.8 | 18.02 | B163 | TP/TBP250M4 | 61821 | 61821 |
| 74.4 | 6353 | 1.7 | 19.96 | B163 | TP/TBP250M4 | 63208 | 63208 |
| 67.7 | 6985 | 1.5 | 21.94 | B163 | TP/TBP250M4 | 64468 | 64468 |
| 61.4 | 7695 | 1.4 | 24.17 | B163 | TP/TBP250M4 | 65715 | 65000 |
| 55.9 | 8461 | 1.3 | 26.58 | B163 | TP/TBP250M4 | 66894 | 65000 |
| 51.6 | 9168 | 1.1 | 28.80 | B163 | TP/TBP250M4 | 67852 | 65000 |
| 48.0 | 9844 | 1.2 | 30.92 | B163 | TP/TBP250M4 | 68663 | 65000 |
| 43.4 | 10904 | 1.1 | 34.25 | B163 | TP/TBP250M4 | 69758 | 65000 |
| 39.4 | 11989 | 1.0 | 37.66 | B163 | TP/TBP250M4 | 70686 | 65000 |
| 36.5 | 12941 | 1.0 | 40.65 | B163 | TP/TBP250M4 | 71363 | 65000 |

## 75.00 kW

| n2 [rpm] | M2 [Nm] | fs | i | Riduttore | Motore | Fr2 D-S-P [N] | Fr2 C [N] |
|---|---|---|---|---|---|---|---|
| 167.0 | 3860 | 1.8 | 8.89 | B163 | TP/TBP280S4 | 50164 | 50164 |
| 140.4 | 4591 | 1.7 | 10.58 | B163 | TP/TBP280S4 | 52239 | 52239 |
| 125.1 | 5152 | 1.5 | 11.87 | B163 | TP/TBP280S4 | 53597 | 53597 |
| 115.9 | 5560 | 1.6 | 12.81 | B163 | TP/TBP280S4 | 54478 | 54478 |
| 105.4 | 6113 | 1.6 | 14.08 | B163 | TP/TBP280S4 | 55553 | 55553 |
| 95.7 | 6738 | 1.5 | 15.52 | B163 | TP/TBP280S4 | 56622 | 56622 |
| 90.6 | 7113 | 1.4 | 16.39 | B163 | TP/TBP280S4 | 57200 | 57200 |
| 82.4 | 7821 | 1.3 | 18.02 | B163 | TP/TBP280S4 | 58177 | 58177 |
| 67.7 | 9526 | 1.1 | 21.94 | B163 | TP/TBP280S4 | 60029 | 60029 |
| 61.4 | 10493 | 1.0 | 24.17 | B163 | TP/TBP280S4 | 60826 | 60826 |
| 55.9 | 11537 | 1.0 | 26.58 | B163 | TP/TBP280S4 | 61519 | 61519 |

# 5.1 B/BA MOTORIDUTTORE (50Hz)



## 90.00 kW

| n2 [rpm] | M2 [Nm] | fs | i | Riduttore | Motore | Fr2 D-S-P [N] | Fr2 C [N] |
|---|---|---|---|---|---|---|---|
| 167.0 | 4632 | 1.5 | 8.89 | B163 | TP/TBP280M4 | 48815 | 48815 |
| 140.4 | 5509 | 1.4 | 10.58 | B163 | TP/TBP280M4 | 50635 | 50635 |
| 125.1 | 6183 | 1.2 | 11.87 | B163 | TP/TBP280M4 | 51797 | 51797 |
| 115.9 | 6672 | 1.3 | 12.81 | B163 | TP/TBP280M4 | 52535 | 52535 |
| 105.4 | 7336 | 1.3 | 14.08 | B163 | TP/TBP280M4 | 53416 | 53416 |
| 95.7 | 8085 | 1.2 | 15.52 | B163 | TP/TBP280M4 | 54267 | 54267 |
| 90.6 | 8536 | 1.2 | 16.39 | B163 | TP/TBP280M4 | 54714 | 54714 |
| 82.4 | 9385 | 1.1 | 18.02 | B163 | TP/TBP280M4 | 55445 | 55445 |
| 67.7 | 11431 | 0.9 | 21.94 | B163 | TP/TBP280M4 | 56701 | 56701 |

# 5.2 IB/IBA RIDUTTORE - 1750 RPM



## IBA42

| $Mn_2$ [Nm] | i | $Pn_1$ [kW] | n2 [rpm] | Fr1 [N] | Fr2 D-S-P [N] | Fr2 C [N] |
|---|---|---|---|---|---|---|
| 85 | 7.62 | 2.14 | 229.8 | 373 | - | 1684 |
| 85 | 10.62 | 1.54 | 164.7 | 355 | - | 1882 |
| 85 | 12.95 | 1.26 | 135.2 | 406 | - | 2010 |
| 85 | 14.46 | 1.13 | 121.0 | 443 | - | 2085 |
| 113 | 16.47 | 1.32 | 106.2 | 579 | - | 2178 |
| 113 | 22.97 | 0.95 | 76.2 | 355 | - | 2433 |
| 113 | 28.00 | 0.78 | 62.5 | 406 | - | 2599 |
| 113 | 31.27 | 0.70 | 56.0 | 443 | - | 2697 |
| 113 | 33.78 | 0.64 | 51.8 | 458 | - | 2767 |
| 113 | 47.12 | 0.46 | 37.1 | 355 | - | 3092 |
| 113 | 57.43 | 0.38 | 30.5 | 406 | - | 3303 |
| 103 | 64.13 | 0.31 | 27.3 | 406 | - | 3426 |
| 103 | 78.17 | 0.26 | 22.4 | 406 | - | 3660 |

## IBA52

| $Mn_2$ [Nm] | i | $Pn_1$ [kW] | n2 [rpm] | Fr1 [N] | Fr2 D-S-P [N] | Fr2 C [N] |
|---|---|---|---|---|---|---|
| 150 | 7.91 | 3.67 | 221.2 | 373 | - | 1828 |
| 150 | 9.46 | 3.07 | 185.0 | 414 | - | 1940 |
| 150 | 11.57 | 2.51 | 151.2 | 405 | - | 2075 |
| 150 | 14.63 | 1.98 | 119.7 | 392 | - | 2243 |
| 188 | 17.11 | 2.12 | 102.3 | 529 | - | 2363 |
| 188 | 20.46 | 1.77 | 85.5 | 414 | - | 2508 |
| 188 | 25.03 | 1.45 | 69.9 | 405 | - | 2683 |
| 188 | 31.63 | 1.15 | 55.3 | 392 | - | 2900 |
| 188 | 35.10 | 1.03 | 49.9 | 446 | - | 3003 |
| 188 | 41.97 | 0.86 | 41.7 | 414 | - | 3187 |
| 207 | 51.34 | 0.78 | 34.1 | 445 | - | 3409 |
| 188 | 64.87 | 0.56 | 27.0 | 356 | - | 3685 |
| 188 | 79.07 | 0.46 | 22.1 | 406 | - | 3936 |

## IBA53

| $Mn_2$ [Nm] | i | $Pn_1$ [kW] | n2 [rpm] | Fr1 [N] | Fr2 D-S-P [N] | Fr2 C [N] |
|---|---|---|---|---|---|---|
| 207 | 73.70 | 0.57 | 23.7 | 472 | - | 3845 |
| 207 | 93.33 | 0.45 | 18.8 | 472 | - | 4000 |
| 207 | 111.61 | 0.38 | 15.7 | 472 | - | 4000 |
| 207 | 136.53 | 0.31 | 12.8 | 472 | - | 4000 |
| 207 | 172.53 | 0.24 | 10.1 | 472 | - | 4000 |
| 207 | 197.11 | 0.21 | 8.9 | 472 | - | 4000 |

# 5.2 IB/IBA RIDUTTORE - 1750 RPM



## IBA53

| $Mn_2$ [Nm] | i | $Pn_1$ [kW] | n2 [rpm] | Fr1 [N] | Fr2 D-S-P [N] | Fr2 C [N] |
|---|---|---|---|---|---|---|
| 207 | 249.08 | 0.17 | 7.0 | 472 | - | 4000 |
| 207 | 271.16 | 0.16 | 6.5 | 472 | - | 4000 |
| 207 | 342.65 | 0.12 | 5.1 | 472 | - | 4000 |

## IBA72

| $Mn_2$ [Nm] | i | $Pn_1$ [kW] | n2 [rpm] | Fr1 [N] | Fr2 D-S-P [N] | Fr2 C [N] |
|---|---|---|---|---|---|---|
| 329 | 8.36 | 7.59 | 209.4 | 664 | 4715 | 2357 |
| 329 | 10.06 | 6.31 | 174.0 | 685 | 5016 | 2508 |
| 329 | 12.44 | 5.10 | 140.6 | 667 | 5384 | 2692 |
| 395 | 14.91 | 5.11 | 117.4 | 826 | 5718 | 2859 |
| 395 | 17.94 | 4.24 | 97.5 | 685 | 6083 | 3041 |
| 395 | 22.19 | 3.43 | 78.8 | 667 | 6529 | 3265 |
| 395 | 27.45 | 2.77 | 63.8 | 667 | 7009 | 3504 |
| 395 | 33.04 | 2.30 | 53.0 | 685 | 7456 | 3728 |
| 376 | 40.87 | 1.77 | 42.8 | 635 | 8003 | 4002 |
| 329 | 45.64 | 1.39 | 38.3 | 646 | 8303 | 4152 |
| 329 | 54.94 | 1.16 | 31.9 | 685 | 8833 | 4416 |
| 329 | 67.96 | 0.93 | 25.8 | 667 | 9481 | 4741 |

## IBA73

| $Mn_2$ [Nm] | i | $Pn_1$ [kW] | n2 [rpm] | Fr1 [N] | Fr2 D-S-P [N] | Fr2 C [N] |
|---|---|---|---|---|---|---|
| 423 | 43.89 | 1.96 | 39.9 | 330 | 8196 | 4098 |
| 423 | 52.83 | 1.63 | 33.1 | 411 | 8718 | 4359 |
| 423 | 65.35 | 1.32 | 26.8 | 400 | 9358 | 4679 |
| 423 | 80.83 | 1.07 | 21.6 | 400 | 10000 | 5023 |
| 423 | 97.29 | 0.89 | 18.0 | 411 | 10000 | 5343 |
| 423 | 120.34 | 0.72 | 14.5 | 400 | 10000 | 5500 |
| 423 | 149.73 | 0.58 | 11.7 | 398 | 10000 | 5500 |
| 423 | 180.23 | 0.48 | 9.7 | 411 | 10000 | 5500 |
| 423 | 222.93 | 0.39 | 7.8 | 400 | 10000 | 5500 |
| 423 | 260.20 | 0.33 | 6.7 | 424 | 10000 | 5500 |
| 423 | 321.85 | 0.27 | 5.4 | 400 | 10000 | 5500 |
| 423 | 357.95 | 0.24 | 4.9 | 445 | 10000 | 5500 |
| 423 | 442.76 | 0.19 | 4.0 | 400 | 10000 | 5500 |

# 5.2 IB/IBA RIDUTTORE - 1750 RPM



## IB063

| $Mn_2$ [Nm] | i | $Pn_1$ [kW] | n2 [rpm] | Fr1 [N] | Fr2 D-S-P [N] | Fr2 C [N] |
|---|---|---|---|---|---|---|
| 273 | 5.71 | 9.71 | 306.2 | 367 | 6520 | 1863 |
| 320 | 6.88 | 9.46 | 254.4 | 388 | 6797 | 1942 |
| 329 | 7.32 | 9.15 | 239.0 | 415 | 6927 | 1979 |
| 432 | 9.16 | 9.61 | 191.0 | 375 | 7105 | 2030 |
| 489 | 10.26 | 9.70 | 170.5 | 368 | 7197 | 2056 |
| 508 | 11.03 | 9.37 | 158.7 | 395 | 7337 | 2096 |
| 545 | 12.35 | 8.98 | 141.7 | 428 | 7536 | 2153 |
| 555 | 13.15 | 8.59 | 133.1 | 462 | 7702 | 2200 |
| 555 | 15.18 | 7.44 | 115.3 | 559 | 8195 | 2341 |
| 564 | 17.00 | 6.75 | 102.9 | 618 | 8562 | 2446 |
| 564 | 22.39 | 5.13 | 78.2 | 756 | 9618 | 2748 |
| 564 | 26.09 | 4.40 | 67.1 | 817 | 10248 | 2928 |
| 564 | 28.03 | 4.10 | 62.4 | 843 | 10554 | 3016 |
| 564 | 33.43 | 3.43 | 52.3 | 899 | 11338 | 3240 |
| 564 | 38.58 | 2.98 | 45.4 | 938 | 12000 | 3431 |
| 564 | 43.22 | 2.66 | 40.5 | 965 | 12000 | 3590 |
| 564 | 50.81 | 2.26 | 34.4 | 999 | 12000 | 3827 |
| 564 | 56.93 | 2.02 | 30.7 | 1020 | 12000 | 4001 |
| 564 | 69.16 | 1.66 | 25.3 | 1050 | 12000 | 4315 |
| 564 | 77.48 | 1.48 | 22.6 | 1065 | 12000 | 4508 |
| 564 | 90.33 | 1.27 | 19.4 | 1083 | 12000 | 4779 |
| 564 | 101.20 | 1.13 | 17.3 | 1095 | 12000 | 4990 |
| 564 | 111.74 | 1.03 | 15.7 | 1104 | 12000 | 5180 |
| 564 | 124.20 | 0.92 | 14.1 | 1113 | 12000 | 5390 |
| 564 | 139.15 | 0.83 | 12.6 | 1121 | 12000 | 5623 |
| 564 | 157.42 | 0.73 | 11.1 | 1129 | 12000 | 5887 |

## IB083

| $Mn_2$ [Nm] | i | $Pn_1$ [kW] | n2 [rpm] | Fr1 [N] | Fr2 D-S-P [N] | Fr2 C [N] |
|---|---|---|---|---|---|---|
| 470 | 7.81 | 12.25 | 224.1 | 1764 | 11107 | 3173 |
| 564 | 8.62 | 13.32 | 202.9 | 1657 | 11159 | 3188 |
| 611 | 10.49 | 11.85 | 166.8 | 1804 | 11869 | 3391 |
| 705 | 11.59 | 12.39 | 151.0 | 1750 | 11965 | 3419 |
| 761 | 14.43 | 10.74 | 121.3 | 1916 | 12849 | 3671 |
| 799 | 16.60 | 9.80 | 105.5 | 2011 | 13450 | 3843 |
| 799 | 18.32 | 8.88 | 95.5 | 2104 | 14004 | 4001 |
| 799 | 22.82 | 7.13 | 76.7 | 2281 | 15298 | 4371 |
| 799 | 26.71 | 6.09 | 65.5 | 2386 | 16288 | 4654 |
| 799 | 29.50 | 5.52 | 59.3 | 2444 | 16936 | 4839 |
| 799 | 31.80 | 5.12 | 55.0 | 2484 | 17443 | 4984 |

# 5.2 IB/IBA RIDUTTORE - 1750 RPM



## IB083

| $Mn_2$ [Nm] | i | $Pn_1$ [kW] | n2 [rpm] | Fr1 [N] | Fr2 D-S-P [N] | Fr2 C [N] |
|---|---|---|---|---|---|---|
| 799 | 34.49 | 4.72 | 50.7 | 2500 | 18000 | 5144 |
| 799 | 39.60 | 4.11 | 44.2 | 2500 | 18000 | 5427 |
| 799 | 42.95 | 3.79 | 40.7 | 2500 | 18000 | 5600 |
| 799 | 45.44 | 3.58 | 38.5 | 2500 | 18000 | 5722 |
| 799 | 51.19 | 3.18 | 34.2 | 2500 | 18000 | 5989 |
| 799 | 55.52 | 2.93 | 31.5 | 2500 | 18000 | 6177 |
| 799 | 59.96 | 2.71 | 29.2 | 2500 | 18000 | 6359 |
| 799 | 63.74 | 2.55 | 27.4 | 2500 | 18000 | 6507 |
| 799 | 69.14 | 2.35 | 25.3 | 2500 | 18000 | 6710 |
| 799 | 73.14 | 2.22 | 23.9 | 2500 | 18000 | 6853 |
| 799 | 80.76 | 2.01 | 21.7 | 2500 | 18000 | 7111 |
| 799 | 92.19 | 1.76 | 19.0 | 2500 | 18000 | 7470 |
| 799 | 100.57 | 1.62 | 17.4 | 2500 | 18000 | 7714 |
| 799 | 105.29 | 1.55 | 16.6 | 2500 | 18000 | 7846 |
| 799 | 116.25 | 1.40 | 15.1 | 2500 | 18000 | 8137 |
| 799 | 126.76 | 1.28 | 13.8 | 2500 | 18000 | 8400 |
| 799 | 144.77 | 1.12 | 12.1 | 2500 | 18000 | 8818 |

## IB103

| $Mn_2$ [Nm] | i | $Pn_1$ [kW] | n2 [rpm] | Fr1 [N] | Fr2 D-S-P [N] | Fr2 C [N] |
|---|---|---|---|---|---|---|
| 752 | 8.13 | 18.84 | 215.3 | 1192 | 13788 | 3939 |
| 846 | 8.97 | 19.21 | 195.2 | 1157 | 14044 | 4012 |
| 940 | 10.92 | 17.53 | 160.2 | 1317 | 14880 | 4252 |
| 940 | 12.05 | 15.88 | 145.2 | 1473 | 15461 | 4417 |
| 1128 | 14.99 | 15.33 | 116.8 | 1526 | 16275 | 4650 |
| 1316 | 17.27 | 15.52 | 101.3 | 1508 | 16670 | 4763 |
| 1316 | 19.06 | 14.06 | 91.8 | 1646 | 17345 | 4956 |
| 1316 | 23.70 | 11.31 | 73.8 | 1907 | 18922 | 5406 |
| 1410 | 26.51 | 10.83 | 66.0 | 1953 | 19508 | 5574 |
| 1504 | 30.55 | 10.02 | 57.3 | 2029 | 20367 | 5819 |
| 1598 | 33.07 | 9.84 | 52.9 | 2047 | 20749 | 5928 |
| 1598 | 35.87 | 9.07 | 48.8 | 2120 | 21439 | 6125 |
| 1598 | 41.12 | 7.91 | 42.5 | 2230 | 22000 | 6469 |
| 1598 | 44.61 | 7.29 | 39.2 | 2288 | 22000 | 6680 |
| 1598 | 47.28 | 6.88 | 37.0 | 2327 | 22000 | 6835 |
| 1598 | 50.24 | 6.48 | 34.8 | 2366 | 22000 | 7000 |
| 1598 | 53.02 | 6.14 | 33.0 | 2398 | 22000 | 7149 |
| 1598 | 58.50 | 5.56 | 29.9 | 2453 | 22000 | 7429 |
| 1598 | 64.89 | 5.01 | 27.0 | 2505 | 22000 | 7732 |
| 1598 | 68.58 | 4.74 | 25.5 | 2530 | 22000 | 7899 |

# 5.2 IB/IBA RIDUTTORE - 1750 RPM



## IB103

| $Mn_2$ [Nm] | i | $Pn_1$ [kW] | n2 [rpm] | Fr1 [N] | Fr2 D-S-P [N] | Fr2 C [N] |
|---|---|---|---|---|---|---|
| 1598 | 72.76 | 4.47 | 24.1 | 2556 | 22000 | 8081 |
| 1598 | 78.92 | 4.12 | 22.2 | 2589 | 22000 | 8336 |
| 1692 | 83.66 | 4.12 | 20.9 | 2590 | 22000 | 8446 |
| 1692 | 92.31 | 3.73 | 19.0 | 2626 | 22000 | 8771 |
| 1692 | 105.44 | 3.27 | 16.6 | 2671 | 22000 | 9227 |
| 1692 | 114.80 | 3.00 | 15.2 | 2696 | 22000 | 9529 |
| 1692 | 120.42 | 2.86 | 14.5 | 2709 | 22000 | 9703 |
| 1692 | 132.87 | 2.59 | 13.2 | 2735 | 22000 | 10069 |
| 1692 | 144.69 | 2.38 | 12.1 | 2755 | 22000 | 10396 |
| 1692 | 165.25 | 2.08 | 10.6 | 2783 | 22000 | 10924 |

## IB123

| $Mn_2$ [Nm] | i | $Pn_1$ [kW] | n2 [rpm] | Fr1 [N] | Fr2 D-S-P [N] | Fr2 C [N] |
|---|---|---|---|---|---|---|
| 1410 | 7.97 | 36.04 | 219.7 | 2647 | 16004 | 4572 |
| 1692 | 9.62 | 35.81 | 181.9 | 2656 | 16152 | 4615 |
| 1880 | 10.33 | 37.04 | 169.3 | 2610 | 15860 | 4531 |
| 1880 | 12.48 | 30.67 | 140.2 | 2849 | 17434 | 4981 |
| 1974 | 13.84 | 29.03 | 126.4 | 2910 | 17910 | 5117 |
| 1974 | 15.38 | 26.13 | 113.8 | 3019 | 18865 | 5390 |
| 2068 | 18.58 | 22.67 | 94.2 | 3150 | 20227 | 5779 |
| 2350 | 20.61 | 23.22 | 84.9 | 3129 | 19967 | 5705 |
| 2632 | 22.78 | 23.52 | 76.8 | 3117 | 19706 | 5630 |
| 2632 | 25.89 | 20.70 | 67.6 | 3223 | 21077 | 6022 |
| 2632 | 27.51 | 19.48 | 63.6 | 3269 | 21748 | 6214 |
| 2632 | 30.79 | 17.40 | 56.8 | 3347 | 23031 | 6580 |
| 2632 | 31.26 | 17.14 | 56.0 | 3357 | 23207 | 6631 |
| 2632 | 34.68 | 15.45 | 50.5 | 3421 | 24438 | 6982 |
| 2632 | 40.53 | 13.22 | 43.2 | 3504 | 26365 | 7533 |
| 2820 | 44.89 | 12.79 | 39.0 | 3521 | 26820 | 7663 |
| 3008 | 49.80 | 12.30 | 35.1 | 3539 | 27343 | 7812 |
| 3008 | 54.30 | 11.28 | 32.2 | 3577 | 28534 | 8153 |
| 3008 | 59.36 | 10.32 | 29.5 | 3613 | 29797 | 8514 |
| 3102 | 62.59 | 10.09 | 28.0 | 3622 | 30000 | 8610 |
| 3102 | 69.43 | 9.10 | 25.2 | 3659 | 30000 | 9052 |
| 3290 | 74.42 | 9.00 | 23.5 | 3663 | 30000 | 9109 |
| 3290 | 80.04 | 8.37 | 21.9 | 3687 | 30000 | 9436 |
| 3290 | 89.87 | 7.45 | 19.5 | 3721 | 30000 | 9971 |
| 3290 | 99.70 | 6.72 | 17.6 | 3749 | 30000 | 10470 |
| 3290 | 106.65 | 6.28 | 16.4 | 3765 | 30000 | 10802 |
| 3290 | 119.60 | 5.60 | 14.6 | 3791 | 30000 | 11385 |

# 5.2 IB/IBA RIDUTTORE - 1750 RPM



## IB123

| $Mn_2$ [Nm] | i | $Pn_1$ [kW] | n2 [rpm] | Fr1 [N] | Fr2 D-S-P [N] | Fr2 C [N] |
|---|---|---|---|---|---|---|
| 3290 | 129.96 | 5.15 | 13.5 | 3808 | 30000 | 11822 |
| 3290 | 144.43 | 4.64 | 12.1 | 3827 | 30000 | 12394 |
| 3290 | 160.23 | 4.18 | 10.9 | 3844 | 30000 | 12976 |
| 3290 | 180.40 | 3.71 | 9.7 | 3862 | 30000 | 13667 |

## IB143

| $Mn_2$ [Nm] | i | $Pn_1$ [kW] | n2 [rpm] | Fr1 [N] | Fr2 D-S-P [N] | Fr2 C [N] |
|---|---|---|---|---|---|---|
| 2820 | 10.84 | 52.97 | 161.4 | 2401 | 14322 | 14322 |
| 2914 | 11.87 | 49.99 | 147.5 | 2491 | 14730 | 14730 |
| 2914 | 14.49 | 40.96 | 120.8 | 2764 | 16364 | 16364 |
| 3008 | 17.04 | 35.94 | 102.7 | 2916 | 17477 | 17477 |
| 3384 | 18.66 | 36.93 | 93.8 | 2886 | 17100 | 17100 |
| 3760 | 21.00 | 36.46 | 83.3 | 2900 | 17009 | 17009 |
| 4136 | 22.77 | 36.98 | 76.8 | 2885 | 16597 | 16597 |
| 4324 | 25.63 | 34.35 | 68.3 | 2964 | 17182 | 17182 |
| 4324 | 27.44 | 32.08 | 63.8 | 3033 | 17889 | 17889 |
| 4418 | 30.05 | 29.94 | 58.2 | 3098 | 18551 | 18551 |
| 4418 | 33.01 | 27.25 | 53.0 | 3179 | 19580 | 19580 |
| 4512 | 36.67 | 25.05 | 47.7 | 3245 | 20470 | 20470 |
| 4512 | 40.29 | 22.80 | 43.4 | 3313 | 21570 | 21570 |
| 4512 | 44.16 | 20.80 | 39.6 | 3374 | 22675 | 22675 |
| 4700 | 48.35 | 19.79 | 36.2 | 3404 | 23201 | 23201 |
| 4700 | 53.16 | 18.00 | 32.9 | 3458 | 24414 | 24414 |
| 4700 | 54.63 | 17.52 | 32.0 | 3473 | 24770 | 24770 |
| 4700 | 59.02 | 16.22 | 29.6 | 3512 | 25798 | 25798 |
| 4700 | 64.88 | 14.75 | 27.0 | 3557 | 27093 | 27093 |
| 4700 | 70.43 | 13.59 | 24.9 | 3592 | 28249 | 28249 |
| 4700 | 77.12 | 12.41 | 22.7 | 3627 | 29562 | 29562 |
| 4700 | 85.54 | 11.19 | 20.5 | 3664 | 31114 | 31114 |
| 4700 | 94.13 | 10.17 | 18.6 | 3695 | 32591 | 32591 |
| 4700 | 105.83 | 9.04 | 16.5 | 3729 | 34468 | 34468 |
| 4700 | 111.94 | 8.55 | 15.6 | 3744 | 35392 | 35392 |
| 4700 | 124.62 | 7.68 | 14.0 | 3770 | 37208 | 37208 |
| 4700 | 136.44 | 7.01 | 12.8 | 3790 | 38793 | 38793 |
| 4700 | 149.59 | 6.40 | 11.7 | 3809 | 40000 | 40000 |
| 4700 | 166.53 | 5.75 | 10.5 | 3829 | 40000 | 40000 |
| 4700 | 187.24 | 5.11 | 9.3 | 3848 | 40000 | 40000 |

# 5.2 IB/IBA RIDUTTORE - 1750 RPM



## IB153

| $Mn_2$ [Nm] | i | $Pn_1$ [kW] | n2 [rpm] | Fr1 [N] | Fr2 D-S-P [N] | Fr2 C [N] |
|---|---|---|---|---|---|---|
| 4230 | 10.49 | 82.09 | 166.8 | 7203 | 30265 | 30265 |
| 4230 | 12.64 | 68.13 | 138.4 | 7657 | 32579 | 32579 |
| 4700 | 14.01 | 68.30 | 124.9 | 7651 | 33227 | 33227 |
| 4700 | 15.40 | 62.14 | 113.6 | 7852 | 34499 | 34499 |
| 5640 | 18.56 | 61.89 | 94.3 | 7860 | 35747 | 35747 |
| 6110 | 20.56 | 60.50 | 85.1 | 7905 | 36575 | 36575 |
| 6298 | 23.86 | 53.75 | 73.3 | 8125 | 38588 | 38588 |
| 6392 | 25.19 | 51.67 | 69.5 | 8193 | 39314 | 39314 |
| 7520 | 28.23 | 54.24 | 62.0 | 8109 | 39527 | 39527 |
| 7520 | 30.35 | 50.45 | 57.7 | 8232 | 40748 | 40748 |
| 7520 | 33.63 | 45.52 | 52.0 | 8393 | 42534 | 42534 |
| 7520 | 35.02 | 43.72 | 50.0 | 8451 | 43252 | 43252 |
| 7520 | 38.81 | 39.45 | 45.1 | 8590 | 45125 | 45125 |
| 7520 | 42.30 | 36.20 | 41.4 | 8696 | 46743 | 46743 |
| 7520 | 47.53 | 32.21 | 36.8 | 8826 | 49012 | 49012 |
| 7520 | 50.56 | 30.28 | 34.6 | 8889 | 50248 | 50248 |
| 7520 | 54.64 | 28.02 | 32.0 | 8963 | 51837 | 51837 |
| 7520 | 57.27 | 26.73 | 30.6 | 9005 | 52821 | 52821 |
| 7520 | 60.92 | 25.13 | 28.7 | 9057 | 54136 | 54136 |
| 7520 | 63.47 | 24.12 | 27.6 | 9090 | 55024 | 55024 |
| 7520 | 71.15 | 21.52 | 24.6 | 9174 | 57559 | 57559 |
| 7520 | 77.22 | 19.83 | 22.7 | 9229 | 59440 | 59440 |
| 7520 | 83.89 | 18.25 | 20.9 | 9281 | 61391 | 61391 |
| 7520 | 87.65 | 17.47 | 20.0 | 9306 | 62448 | 62448 |
| 7520 | 93.05 | 16.46 | 18.8 | 9339 | 63911 | 63911 |
| 7520 | 103.12 | 14.85 | 17.0 | 9392 | 65000 | 65000 |
| 7520 | 123.88 | 12.36 | 14.1 | 9473 | 65000 | 65000 |
| 7520 | 134.27 | 11.40 | 13.0 | 9504 | 65000 | 65000 |
| 7520 | 149.26 | 10.26 | 11.7 | 9541 | 65000 | 65000 |
| 7520 | 165.42 | 9.26 | 10.6 | 9574 | 65000 | 65000 |

## IB163

| $Mn_2$ [Nm] | i | $Pn_1$ [kW] | n2 [rpm] | Fr1 [N] | Fr2 D-S-P [N] | Fr2 C [N] |
|---|---|---|---|---|---|---|
| 6392 | 8.89 | 146.37 | 196.8 | 7268 | 42738 | 42738 |
| 7426 | 10.58 | 142.97 | 165.5 | 7338 | 44107 | 44107 |
| 7238 | 11.87 | 124.16 | 147.4 | 7730 | 46651 | 46651 |
| 8272 | 12.81 | 131.49 | 136.6 | 7578 | 46354 | 46354 |
| 9024 | 14.08 | 130.46 | 124.3 | 7599 | 46974 | 46974 |
| 9400 | 15.52 | 123.30 | 112.8 | 7748 | 48363 | 48363 |
| 9306 | 16.39 | 115.63 | 106.8 | 7908 | 49696 | 49696 |

# 5.2 IB/IBA RIDUTTORE - 1750 RPM



## IB163

| $Mn_2$ [Nm] | i | $Pn_1$ [kW] | n2 [rpm] | Fr1 [N] | Fr2 D-S-P [N] | Fr2 C [N] |
|---|---|---|---|---|---|---|
| 9776 | 18.02 | 110.48 | 97.1 | 8015 | 50972 | 50972 |
| 10058 | 19.96 | 102.62 | 87.7 | 8179 | 52815 | 52815 |
| 9776 | 21.94 | 90.71 | 79.8 | 8428 | 55548 | 55548 |
| 9870 | 24.17 | 83.13 | 72.4 | 8585 | 57740 | 57740 |
| 10434 | 26.58 | 79.93 | 65.8 | 8652 | 59139 | 59139 |
| 9588 | 28.80 | 67.78 | 60.8 | 8905 | 62694 | 62694 |
| 10810 | 30.92 | 71.18 | 56.6 | 8835 | 62446 | 62446 |
| 11186 | 34.25 | 66.49 | 51.1 | 8932 | 64581 | 64581 |
| 11562 | 37.66 | 62.51 | 46.5 | 9015 | 66599 | 65000 |
| 11938 | 40.65 | 59.79 | 43.0 | 9072 | 68159 | 65000 |
| 11280 | 45.09 | 50.93 | 38.8 | 9256 | 72405 | 65000 |
| 12220 | 51.00 | 48.79 | 34.3 | 9301 | 74583 | 65000 |
| 12220 | 53.63 | 46.39 | 32.6 | 9351 | 76188 | 65000 |
| 12220 | 58.97 | 42.20 | 29.7 | 9439 | 79289 | 65000 |
| 12220 | 69.78 | 35.66 | 25.1 | 9575 | 80000 | 65000 |
| 12220 | 76.72 | 32.43 | 22.8 | 9642 | 80000 | 65000 |
| 12220 | 87.54 | 28.42 | 20.0 | 9726 | 80000 | 65000 |
| 12220 | 96.25 | 25.85 | 18.2 | 9779 | 80000 | 65000 |
| 12220 | 103.93 | 23.94 | 16.8 | 9819 | 80000 | 65000 |
| 12220 | 114.27 | 21.77 | 15.3 | 9864 | 80000 | 65000 |
| 12220 | 126.29 | 19.70 | 13.9 | 9907 | 80000 | 65000 |
| 12220 | 138.85 | 17.92 | 12.6 | 9944 | 80000 | 65000 |
| 12220 | 154.83 | 16.07 | 11.3 | 9983 | 80000 | 65000 |

# 5.3 IB/IBA RIDUTTORE - 1400 RPM



## IBA42

| $Mn_2$ [Nm] | i | $Pn_1$ [kW] | n2 [rpm] | Fr1 [N] | Fr2 D-S-P [N] | Fr2 C [N] |
|---|---|---|---|---|---|---|
| 90 | 7.62 | 1.82 | 183.8 | 373 | - | 1814 |
| 90 | 10.62 | 1.31 | 131.8 | 355 | - | 2027 |
| 90 | 12.95 | 1.07 | 108.1 | 406 | - | 2165 |
| 90 | 14.46 | 0.96 | 96.8 | 443 | - | 2246 |
| 120 | 16.47 | 1.12 | 85.0 | 579 | - | 2346 |
| 120 | 22.97 | 0.81 | 60.9 | 355 | - | 2621 |
| 120 | 28.00 | 0.66 | 50.0 | 406 | - | 2800 |
| 120 | 31.27 | 0.59 | 44.8 | 443 | - | 2905 |
| 120 | 33.78 | 0.55 | 41.4 | 458 | - | 2981 |
| 120 | 47.12 | 0.39 | 29.7 | 355 | - | 3331 |
| 120 | 57.43 | 0.32 | 24.4 | 406 | - | 3558 |
| 110 | 64.13 | 0.26 | 21.8 | 406 | - | 3691 |
| 110 | 78.17 | 0.22 | 17.9 | 406 | - | 3943 |

## IBA52

| $Mn_2$ [Nm] | i | $Pn_1$ [kW] | n2 [rpm] | Fr1 [N] | Fr2 D-S-P [N] | Fr2 C [N] |
|---|---|---|---|---|---|---|
| 160 | 7.91 | 3.12 | 176.9 | 373 | - | 1969 |
| 160 | 9.46 | 2.61 | 148.0 | 414 | - | 2090 |
| 160 | 11.57 | 2.13 | 121.0 | 405 | - | 2235 |
| 160 | 14.63 | 1.69 | 95.7 | 392 | - | 2416 |
| 200 | 17.11 | 1.80 | 81.8 | 529 | - | 2546 |
| 200 | 20.46 | 1.51 | 68.4 | 414 | - | 2702 |
| 200 | 25.03 | 1.23 | 55.9 | 405 | - | 2890 |
| 200 | 31.63 | 0.98 | 44.3 | 392 | - | 3124 |
| 200 | 35.10 | 0.88 | 39.9 | 446 | - | 3235 |
| 200 | 41.97 | 0.74 | 33.4 | 414 | - | 3433 |
| 220 | 51.34 | 0.66 | 27.3 | 445 | - | 3672 |
| 200 | 64.87 | 0.48 | 21.6 | 356 | - | 3970 |
| 200 | 79.07 | 0.39 | 17.7 | 406 | - | 4000 |

## IBA53

| $Mn_2$ [Nm] | i | $Pn_1$ [kW] | n2 [rpm] | Fr1 [N] | Fr2 D-S-P [N] | Fr2 C [N] |
|---|---|---|---|---|---|---|
| 220 | 73.70 | 0.49 | 19.0 | 472 | - | 4000 |
| 220 | 93.33 | 0.38 | 15.0 | 472 | - | 4000 |
| 220 | 111.61 | 0.32 | 12.5 | 472 | - | 4000 |
| 220 | 136.53 | 0.26 | 10.2 | 472 | - | 4000 |
| 220 | 172.53 | 0.21 | 8.1 | 472 | - | 4000 |
| 220 | 197.11 | 0.18 | 7.1 | 472 | - | 4000 |

# 5.3 IB/IBA RIDUTTORE - 1400 RPM



## IBA53

| $Mn_2$ [Nm] | i | $Pn_1$ [kW] | n2 [rpm] | Fr1 [N] | Fr2 D-S-P [N] | Fr2 C [N] |
|---|---|---|---|---|---|---|
| 220 | 249.08 | 0.14 | 5.6 | 472 | - | 4000 |
| 220 | 271.16 | 0.13 | 5.2 | 472 | - | 4000 |
| 220 | 342.65 | 0.10 | 4.1 | 472 | - | 4000 |

## IBA72

| $Mn_2$ [Nm] | i | $Pn_1$ [kW] | n2 [rpm] | Fr1 [N] | Fr2 D-S-P [N] | Fr2 C [N] |
|---|---|---|---|---|---|---|
| 350 | 8.36 | 6.46 | 167.5 | 664 | 5079 | 2540 |
| 350 | 10.06 | 5.37 | 139.2 | 685 | 5403 | 2701 |
| 350 | 12.44 | 4.34 | 112.5 | 667 | 5800 | 2900 |
| 420 | 14.91 | 4.35 | 93.9 | 826 | 6160 | 3080 |
| 420 | 17.94 | 3.61 | 78.0 | 685 | 6552 | 3276 |
| 420 | 22.19 | 2.92 | 63.1 | 667 | 7033 | 3517 |
| 420 | 27.45 | 2.36 | 51.0 | 667 | 7550 | 3775 |
| 420 | 33.04 | 1.96 | 42.4 | 685 | 8031 | 4016 |
| 400 | 40.87 | 1.51 | 34.2 | 635 | 8621 | 4311 |
| 350 | 45.64 | 1.18 | 30.7 | 646 | 8944 | 4472 |
| 350 | 54.94 | 0.98 | 25.5 | 685 | 9515 | 4757 |
| 350 | 67.96 | 0.79 | 20.6 | 667 | 10000 | 5107 |

## IBA73

| $Mn_2$ [Nm] | i | $Pn_1$ [kW] | n2 [rpm] | Fr1 [N] | Fr2 D-S-P [N] | Fr2 C [N] |
|---|---|---|---|---|---|---|
| 450 | 43.89 | 1.67 | 31.9 | 330 | 8828 | 4414 |
| 450 | 52.83 | 1.39 | 26.5 | 411 | 9391 | 4696 |
| 450 | 65.35 | 1.12 | 21.4 | 400 | 10000 | 5041 |
| 450 | 80.83 | 0.91 | 17.3 | 400 | 10000 | 5411 |
| 450 | 97.29 | 0.75 | 14.4 | 411 | 10000 | 5500 |
| 450 | 120.34 | 0.61 | 11.6 | 400 | 10000 | 5500 |
| 450 | 149.73 | 0.49 | 9.3 | 398 | 10000 | 5500 |
| 450 | 180.23 | 0.41 | 7.8 | 411 | 10000 | 5500 |
| 450 | 222.93 | 0.33 | 6.3 | 400 | 10000 | 5500 |
| 450 | 260.20 | 0.28 | 5.4 | 424 | 10000 | 5500 |
| 450 | 321.85 | 0.23 | 4.3 | 400 | 10000 | 5500 |
| 450 | 357.95 | 0.20 | 3.9 | 445 | 10000 | 5500 |
| 450 | 442.76 | 0.17 | 3.2 | 400 | 10000 | 5500 |

# 5.3 IB/IBA RIDUTTORE - 1400 RPM



## IB063

| $Mn_2$ [Nm] | i | $Pn_1$ [kW] | n2 [rpm] | Fr1 [N] | Fr2 D-S-P [N] | Fr2 C [N] |
|---|---|---|---|---|---|---|
| 290 | 5.71 | 8.27 | 245.0 | 314 | 7034 | 2010 |
| 340 | 6.88 | 8.05 | 203.5 | 337 | 7335 | 2096 |
| 350 | 7.32 | 7.79 | 191.2 | 365 | 7475 | 2136 |
| 460 | 9.16 | 8.18 | 152.8 | 323 | 7673 | 2192 |
| 520 | 10.26 | 8.25 | 136.4 | 315 | 7774 | 2221 |
| 540 | 11.03 | 7.98 | 127.0 | 345 | 7927 | 2265 |
| 580 | 12.35 | 7.65 | 113.3 | 380 | 8142 | 2326 |
| 590 | 13.15 | 7.31 | 106.5 | 416 | 8322 | 2378 |
| 590 | 15.18 | 6.33 | 92.3 | 519 | 8853 | 2529 |
| 600 | 17.00 | 5.75 | 82.3 | 581 | 9248 | 2642 |
| 600 | 22.39 | 4.36 | 62.5 | 728 | 10385 | 2967 |
| 600 | 26.09 | 3.75 | 53.7 | 794 | 11063 | 3161 |
| 600 | 28.03 | 3.49 | 49.9 | 821 | 11393 | 3255 |
| 600 | 33.43 | 2.92 | 41.9 | 881 | 12000 | 3496 |
| 600 | 38.58 | 2.53 | 36.3 | 922 | 12000 | 3703 |
| 600 | 43.22 | 2.26 | 32.4 | 951 | 12000 | 3874 |
| 600 | 50.81 | 1.92 | 27.6 | 987 | 12000 | 4129 |
| 600 | 56.93 | 1.72 | 24.6 | 1009 | 12000 | 4316 |
| 600 | 69.16 | 1.41 | 20.2 | 1041 | 12000 | 4654 |
| 600 | 77.48 | 1.26 | 18.1 | 1057 | 12000 | 4861 |
| 600 | 90.33 | 1.08 | 15.5 | 1076 | 12000 | 5154 |
| 600 | 101.20 | 0.97 | 13.8 | 1089 | 12000 | 5380 |
| 600 | 111.74 | 0.87 | 12.5 | 1098 | 12000 | 5585 |
| 600 | 124.20 | 0.79 | 11.3 | 1108 | 12000 | 5811 |
| 600 | 139.15 | 0.70 | 10.1 | 1116 | 12000 | 6062 |
| 600 | 157.42 | 0.62 | 8.9 | 1125 | 12000 | 6346 |

## IB083

| $Mn_2$ [Nm] | i | $Pn_1$ [kW] | n2 [rpm] | Fr1 [N] | Fr2 D-S-P [N] | Fr2 C [N] |
|---|---|---|---|---|---|---|
| 500 | 7.81 | 10.43 | 179.3 | 1685 | 11980 | 3423 |
| 600 | 8.62 | 11.33 | 162.4 | 1571 | 12040 | 3440 |
| 650 | 10.49 | 10.09 | 133.4 | 1728 | 12807 | 3659 |
| 750 | 11.59 | 10.54 | 120.8 | 1671 | 12915 | 3690 |
| 810 | 14.43 | 9.14 | 97.0 | 1847 | 13870 | 3963 |
| 850 | 16.60 | 8.34 | 84.4 | 1948 | 14518 | 4148 |
| 850 | 18.32 | 7.56 | 76.4 | 2047 | 15115 | 4319 |
| 850 | 22.82 | 6.07 | 61.4 | 2235 | 16508 | 4717 |
| 850 | 26.71 | 5.18 | 52.4 | 2346 | 17573 | 5021 |
| 850 | 29.50 | 4.69 | 47.5 | 2408 | 18000 | 5220 |
| 850 | 31.80 | 4.35 | 44.0 | 2451 | 18000 | 5376 |

# 5.3 IB/IBA RIDUTTORE - 1400 RPM



## IB083

| $Mn_2$ [Nm] | i | $Pn_1$ [kW] | n2 [rpm] | Fr1 [N] | Fr2 D-S-P [N] | Fr2 C [N] |
|---|---|---|---|---|---|---|
| 850 | 34.49 | 4.01 | 40.6 | 2494 | 18000 | 5549 |
| 850 | 39.60 | 3.50 | 35.4 | 2500 | 18000 | 5853 |
| 850 | 42.95 | 3.22 | 32.6 | 2500 | 18000 | 6039 |
| 850 | 45.44 | 3.05 | 30.8 | 2500 | 18000 | 6171 |
| 850 | 51.19 | 2.70 | 27.4 | 2500 | 18000 | 6458 |
| 850 | 55.52 | 2.49 | 25.2 | 2500 | 18000 | 6660 |
| 850 | 59.96 | 2.31 | 23.4 | 2500 | 18000 | 6856 |
| 850 | 63.74 | 2.17 | 22.0 | 2500 | 18000 | 7016 |
| 850 | 69.14 | 2.00 | 20.2 | 2500 | 18000 | 7234 |
| 850 | 73.14 | 1.89 | 19.1 | 2500 | 18000 | 7388 |
| 850 | 80.76 | 1.71 | 17.3 | 2500 | 18000 | 7666 |
| 850 | 92.19 | 1.50 | 15.2 | 2500 | 18000 | 8052 |
| 850 | 100.57 | 1.38 | 13.9 | 2500 | 18000 | 8315 |
| 850 | 105.29 | 1.32 | 13.3 | 2500 | 18000 | 8457 |
| 850 | 116.25 | 1.19 | 12.0 | 2500 | 18000 | 8771 |
| 850 | 126.76 | 1.09 | 11.0 | 2500 | 18000 | 9053 |
| 850 | 144.77 | 0.96 | 9.7 | 2500 | 18000 | 9503 |

## IB103

| $Mn_2$ [Nm] | i | $Pn_1$ [kW] | n2 [rpm] | Fr1 [N] | Fr2 D-S-P [N] | Fr2 C [N] |
|---|---|---|---|---|---|---|
| 800 | 8.13 | 16.03 | 172.3 | 1078 | 14868 | 4248 |
| 900 | 8.97 | 16.35 | 156.1 | 1041 | 15147 | 4328 |
| 1000 | 10.92 | 14.92 | 128.2 | 1211 | 16052 | 4586 |
| 1000 | 12.05 | 13.52 | 116.2 | 1377 | 16676 | 4765 |
| 1200 | 14.99 | 13.04 | 93.4 | 1433 | 17560 | 5017 |
| 1400 | 17.27 | 13.20 | 81.1 | 1414 | 17992 | 5141 |
| 1400 | 19.06 | 11.97 | 73.5 | 1561 | 18718 | 5348 |
| 1400 | 23.70 | 9.62 | 59.1 | 1839 | 20415 | 5833 |
| 1500 | 26.51 | 9.22 | 52.8 | 1887 | 21050 | 6014 |
| 1600 | 30.55 | 8.53 | 45.8 | 1969 | 21978 | 6279 |
| 1700 | 33.07 | 8.37 | 42.3 | 1987 | 22000 | 6398 |
| 1700 | 35.87 | 7.72 | 39.0 | 2065 | 22000 | 6610 |
| 1700 | 41.12 | 6.73 | 34.0 | 2182 | 22000 | 6979 |
| 1700 | 44.61 | 6.21 | 31.4 | 2244 | 22000 | 7207 |
| 1700 | 47.28 | 5.86 | 29.6 | 2286 | 22000 | 7374 |
| 1700 | 50.24 | 5.51 | 27.9 | 2327 | 22000 | 7552 |
| 1700 | 53.02 | 5.22 | 26.4 | 2361 | 22000 | 7712 |
| 1700 | 58.50 | 4.73 | 23.9 | 2419 | 22000 | 8013 |
| 1700 | 64.89 | 4.27 | 21.6 | 2474 | 22000 | 8340 |
| 1700 | 68.58 | 4.04 | 20.4 | 2502 | 22000 | 8519 |

# 5.3 IB/IBA RIDUTTORE - 1400 RPM



## IB103

| $Mn_2$ [Nm] | i | $Pn_1$ [kW] | n2 [rpm] | Fr1 [N] | Fr2 D-S-P [N] | Fr2 C [N] |
|---|---|---|---|---|---|---|
| 1700 | 72.76 | 3.81 | 19.2 | 2529 | 22000 | 8715 |
| 1700 | 78.92 | 3.51 | 17.7 | 2564 | 22000 | 8990 |
| 1800 | 83.66 | 3.50 | 16.7 | 2565 | 22000 | 9109 |
| 1800 | 92.31 | 3.18 | 15.2 | 2604 | 22000 | 9459 |
| 1800 | 105.44 | 2.78 | 13.3 | 2651 | 22000 | 9950 |
| 1800 | 114.80 | 2.55 | 12.2 | 2678 | 22000 | 10275 |
| 1800 | 120.42 | 2.43 | 11.6 | 2692 | 22000 | 10462 |
| 1800 | 132.87 | 2.21 | 10.5 | 2719 | 22000 | 10856 |
| 1800 | 144.69 | 2.03 | 9.7 | 2740 | 22000 | 11208 |
| 1800 | 165.25 | 1.77 | 8.5 | 2770 | 22000 | 11776 |

## IB123

| $Mn_2$ [Nm] | i | $Pn_1$ [kW] | n2 [rpm] | Fr1 [N] | Fr2 D-S-P [N] | Fr2 C [N] |
|---|---|---|---|---|---|---|
| 1500 | 7.97 | 30.67 | 175.8 | 2561 | 17308 | 4945 |
| 1800 | 9.62 | 30.48 | 145.5 | 2570 | 17484 | 4995 |
| 2000 | 10.33 | 31.52 | 135.5 | 2521 | 17181 | 4909 |
| 2000 | 12.48 | 26.10 | 112.2 | 2775 | 18875 | 5393 |
| 2100 | 13.84 | 24.71 | 101.1 | 2841 | 19393 | 5541 |
| 2100 | 15.38 | 22.24 | 91.0 | 2957 | 20420 | 5834 |
| 2200 | 18.58 | 19.29 | 75.4 | 3095 | 21892 | 6255 |
| 2500 | 20.61 | 19.76 | 67.9 | 3073 | 21629 | 6180 |
| 2800 | 22.78 | 20.02 | 61.5 | 3061 | 21364 | 6104 |
| 2800 | 25.89 | 17.62 | 54.1 | 3174 | 22840 | 6526 |
| 2800 | 27.51 | 16.58 | 50.9 | 3223 | 23562 | 6732 |
| 2800 | 30.79 | 14.81 | 45.5 | 3306 | 24944 | 7127 |
| 2800 | 31.26 | 14.59 | 44.8 | 3316 | 25133 | 7181 |
| 2800 | 34.68 | 13.15 | 40.4 | 3384 | 26458 | 7559 |
| 2800 | 40.53 | 11.25 | 34.5 | 3473 | 28532 | 8152 |
| 3000 | 44.89 | 10.89 | 31.2 | 3490 | 29033 | 8295 |
| 3200 | 49.80 | 10.47 | 28.1 | 3510 | 29606 | 8459 |
| 3200 | 54.30 | 9.60 | 25.8 | 3550 | 30000 | 8825 |
| 3200 | 59.36 | 8.78 | 23.6 | 3589 | 30000 | 9214 |
| 3300 | 62.59 | 8.59 | 22.4 | 3598 | 30000 | 9319 |
| 3300 | 69.43 | 7.74 | 20.2 | 3638 | 30000 | 9795 |
| 3500 | 74.42 | 7.66 | 18.8 | 3641 | 30000 | 9859 |
| 3500 | 80.04 | 7.12 | 17.5 | 3667 | 30000 | 10211 |
| 3500 | 89.87 | 6.34 | 15.6 | 3703 | 30000 | 10788 |
| 3500 | 99.70 | 5.72 | 14.0 | 3733 | 30000 | 11324 |
| 3500 | 106.65 | 5.35 | 13.1 | 3750 | 30000 | 11682 |
| 3500 | 119.60 | 4.77 | 11.7 | 3777 | 30000 | 12309 |

# 5.3 IB/IBA RIDUTTORE - 1400 RPM



## IB123

| $Mn_2$ [Nm] | i | $Pn_1$ [kW] | n2 [rpm] | Fr1 [N] | Fr2 D-S-P [N] | Fr2 C [N] |
|---|---|---|---|---|---|---|
| 3500 | 129.96 | 4.39 | 10.8 | 3795 | 30000 | 12780 |
| 3500 | 144.43 | 3.95 | 9.7 | 3816 | 30000 | 13395 |
| 3500 | 160.23 | 3.56 | 8.7 | 3834 | 30000 | 14022 |
| 3500 | 180.40 | 3.16 | 7.8 | 3853 | 30000 | 14766 |

## IB143

| $Mn_2$ [Nm] | i | $Pn_1$ [kW] | n2 [rpm] | Fr1 [N] | Fr2 D-S-P [N] | Fr2 C [N] |
|---|---|---|---|---|---|---|
| 3000 | 10.84 | 45.08 | 129.2 | 2299 | 15530 | 15530 |
| 3100 | 11.87 | 42.55 | 118.0 | 2395 | 15973 | 15973 |
| 3100 | 14.49 | 34.86 | 96.7 | 2685 | 17731 | 17731 |
| 3200 | 17.04 | 30.59 | 82.2 | 2847 | 18933 | 18933 |
| 3600 | 18.66 | 31.43 | 75.0 | 2815 | 18542 | 18542 |
| 4000 | 21.00 | 31.03 | 66.7 | 2830 | 18460 | 18460 |
| 4400 | 22.77 | 31.47 | 61.5 | 2813 | 18031 | 18031 |
| 4600 | 25.63 | 29.24 | 54.6 | 2898 | 18668 | 18668 |
| 4600 | 27.44 | 27.30 | 51.0 | 2971 | 19429 | 19429 |
| 4700 | 30.05 | 25.48 | 46.6 | 3040 | 20146 | 20146 |
| 4700 | 33.01 | 23.19 | 42.4 | 3126 | 21254 | 21254 |
| 4800 | 36.67 | 21.32 | 38.2 | 3197 | 22216 | 22216 |
| 4800 | 40.29 | 19.41 | 34.8 | 3269 | 23399 | 23399 |
| 4800 | 44.16 | 17.70 | 31.7 | 3334 | 24589 | 24589 |
| 5000 | 48.35 | 16.84 | 28.9 | 3366 | 25162 | 25162 |
| 5000 | 53.16 | 15.32 | 26.3 | 3424 | 26469 | 26469 |
| 5000 | 54.63 | 14.91 | 25.6 | 3439 | 26852 | 26852 |
| 5000 | 59.02 | 13.80 | 23.7 | 3481 | 27958 | 27958 |
| 5000 | 64.88 | 12.55 | 21.6 | 3528 | 29352 | 29352 |
| 5000 | 70.43 | 11.56 | 19.9 | 3566 | 30597 | 30597 |
| 5000 | 77.12 | 10.56 | 18.1 | 3603 | 32010 | 32010 |
| 5000 | 85.54 | 9.52 | 16.4 | 3643 | 33680 | 33680 |
| 5000 | 94.13 | 8.65 | 14.9 | 3675 | 35271 | 35271 |
| 5000 | 105.83 | 7.70 | 13.2 | 3712 | 37290 | 37290 |
| 5000 | 111.94 | 7.28 | 12.5 | 3728 | 38286 | 38286 |
| 5000 | 124.62 | 6.54 | 11.2 | 3755 | 40000 | 40000 |
| 5000 | 136.44 | 5.97 | 10.3 | 3777 | 40000 | 40000 |
| 5000 | 149.59 | 5.44 | 9.4 | 3797 | 40000 | 40000 |
| 5000 | 166.53 | 4.89 | 8.4 | 3818 | 40000 | 40000 |
| 5000 | 187.24 | 4.35 | 7.5 | 3838 | 40000 | 40000 |

# 5.3 IB/IBA RIDUTTORE - 1400 RPM



## IB153

| $Mn_2$ [Nm] | i | $Pn_1$ [kW] | n2 [rpm] | Fr1 [N] | Fr2 D-S-P [N] | Fr2 C [N] |
|---|---|---|---|---|---|---|
| 4500 | 10.49 | 69.86 | 133.4 | 7032 | 32656 | 32656 |
| 4500 | 12.64 | 57.98 | 110.7 | 7516 | 35147 | 35147 |
| 5000 | 14.01 | 58.13 | 99.9 | 7509 | 35853 | 35853 |
| 5000 | 15.40 | 52.89 | 90.9 | 7723 | 37222 | 37222 |
| 6000 | 18.56 | 52.67 | 75.5 | 7732 | 38582 | 38582 |
| 6500 | 20.56 | 51.49 | 68.1 | 7780 | 39483 | 39483 |
| 6700 | 23.86 | 45.74 | 58.7 | 8014 | 41653 | 41653 |
| 6800 | 25.19 | 43.98 | 55.6 | 8085 | 42436 | 42436 |
| 8000 | 28.23 | 46.16 | 49.6 | 7997 | 42686 | 42686 |
| 8000 | 30.35 | 42.94 | 46.1 | 8128 | 44001 | 44001 |
| 8000 | 33.63 | 38.74 | 41.6 | 8298 | 45923 | 45923 |
| 8000 | 35.02 | 37.21 | 40.0 | 8361 | 46696 | 46696 |
| 8000 | 38.81 | 33.58 | 36.1 | 8509 | 48712 | 48712 |
| 8000 | 42.30 | 30.81 | 33.1 | 8621 | 50453 | 50453 |
| 8000 | 47.53 | 27.41 | 29.4 | 8759 | 52896 | 52896 |
| 8000 | 50.56 | 25.77 | 27.7 | 8826 | 54227 | 54227 |
| 8000 | 54.64 | 23.85 | 25.6 | 8904 | 55937 | 55937 |
| 8000 | 57.27 | 22.75 | 24.4 | 8949 | 56996 | 56996 |
| 8000 | 60.92 | 21.39 | 23.0 | 9005 | 58412 | 58412 |
| 8000 | 63.47 | 20.53 | 22.1 | 9039 | 59367 | 59367 |
| 8000 | 71.15 | 18.32 | 19.7 | 9130 | 62097 | 62097 |
| 8000 | 77.22 | 16.87 | 18.1 | 9188 | 64121 | 64121 |
| 8000 | 83.89 | 15.53 | 16.7 | 9243 | 65000 | 65000 |
| 8000 | 87.65 | 14.87 | 16.0 | 9270 | 65000 | 65000 |
| 8000 | 93.05 | 14.00 | 15.1 | 9305 | 65000 | 65000 |
| 8000 | 103.12 | 12.64 | 13.6 | 9361 | 65000 | 65000 |
| 8000 | 123.88 | 10.52 | 11.3 | 9447 | 65000 | 65000 |
| 8000 | 134.27 | 9.71 | 10.4 | 9480 | 65000 | 65000 |
| 8000 | 149.26 | 8.73 | 9.4 | 9520 | 65000 | 65000 |
| 8000 | 165.42 | 7.88 | 8.5 | 9554 | 65000 | 65000 |

## IB163

| $Mn_2$ [Nm] | i | $Pn_1$ [kW] | n2 [rpm] | Fr1 [N] | Fr2 D-S-P [N] | Fr2 C [N] |
|---|---|---|---|---|---|---|
| 6800 | 8.89 | 124.57 | 157.4 | 7073 | 46145 | 46145 |
| 7900 | 10.58 | 121.68 | 132.4 | 7148 | 47640 | 47640 |
| 7700 | 11.87 | 105.67 | 118.0 | 7565 | 50376 | 50376 |
| 8800 | 12.81 | 111.91 | 109.3 | 7403 | 50078 | 50078 |
| 9600 | 14.08 | 111.03 | 99.4 | 7426 | 50762 | 50762 |
| 10000 | 15.52 | 104.94 | 90.2 | 7584 | 52265 | 52265 |
| 9900 | 16.39 | 98.41 | 85.4 | 7754 | 53698 | 53698 |

# 5.3 IB/IBA RIDUTTORE - 1400 RPM



## IB163

| $Mn_2$ [Nm] | i | $Pn_1$ [kW] | n2 [rpm] | Fr1 [N] | Fr2 D-S-P [N] | Fr2 C [N] |
|---|---|---|---|---|---|---|
| 10400 | 18.02 | 94.03 | 77.7 | 7869 | 55082 | 55082 |
| 10700 | 19.96 | 87.33 | 70.2 | 8043 | 57072 | 57072 |
| 10400 | 21.94 | 77.20 | 63.8 | 8307 | 60008 | 60008 |
| 10500 | 24.17 | 70.75 | 57.9 | 8475 | 62369 | 62369 |
| 11100 | 26.58 | 68.03 | 52.7 | 8546 | 63887 | 63887 |
| 10200 | 28.80 | 57.69 | 48.6 | 8815 | 67696 | 65000 |
| 11500 | 30.92 | 60.58 | 45.3 | 8740 | 67456 | 65000 |
| 11900 | 34.25 | 56.59 | 40.9 | 8844 | 69762 | 65000 |
| 12300 | 37.66 | 53.20 | 37.2 | 8932 | 71943 | 65000 |
| 12700 | 40.65 | 50.89 | 34.4 | 8992 | 73630 | 65000 |
| 12000 | 45.09 | 43.35 | 31.1 | 9189 | 78186 | 65000 |
| 13000 | 51.00 | 41.52 | 27.4 | 9236 | 80000 | 65000 |
| 13000 | 53.63 | 39.48 | 26.1 | 9289 | 80000 | 65000 |
| 13000 | 58.97 | 35.91 | 23.7 | 9382 | 80000 | 65000 |
| 13000 | 69.78 | 30.35 | 20.1 | 9527 | 80000 | 65000 |
| 13000 | 76.72 | 27.60 | 18.2 | 9599 | 80000 | 65000 |
| 13000 | 87.54 | 24.19 | 16.0 | 9688 | 80000 | 65000 |
| 13000 | 96.25 | 22.00 | 14.6 | 9745 | 80000 | 65000 |
| 13000 | 103.93 | 20.37 | 13.5 | 9787 | 80000 | 65000 |
| 13000 | 114.27 | 18.53 | 12.2 | 9835 | 80000 | 65000 |
| 13000 | 126.29 | 16.77 | 11.1 | 9881 | 80000 | 65000 |
| 13000 | 138.85 | 15.25 | 10.1 | 9921 | 80000 | 65000 |
| 13000 | 154.83 | 13.68 | 9.0 | 9962 | 80000 | 65000 |

# 5.4 IB/IBA RIDUTTORE - 1140 RPM



## IBA42

| $Mn_2$ [Nm] | i | $Pn_1$ [kW] | n2 [rpm] | Fr1 [N] | Fr2 D-S-P [N] | Fr2 C [N] |
|---|---|---|---|---|---|---|
| 92 | 7.62 | 1.51 | 149.7 | 373 | - | 1943 |
| 92 | 10.62 | 1.08 | 107.3 | 355 | - | 2171 |
| 92 | 12.95 | 0.89 | 88.0 | 406 | - | 2319 |
| 92 | 14.46 | 0.79 | 78.8 | 443 | - | 2406 |
| 123 | 16.47 | 0.93 | 69.2 | 579 | - | 2512 |
| 123 | 22.97 | 0.67 | 49.6 | 355 | - | 2807 |
| 123 | 28.00 | 0.55 | 40.7 | 406 | - | 2998 |
| 123 | 31.27 | 0.49 | 36.5 | 443 | - | 3111 |
| 123 | 33.78 | 0.45 | 33.8 | 458 | - | 3192 |
| 123 | 47.12 | 0.32 | 24.2 | 355 | - | 3567 |
| 123 | 57.43 | 0.27 | 19.9 | 406 | - | 3810 |
| 113 | 64.13 | 0.22 | 17.8 | 406 | - | 3952 |
| 113 | 78.17 | 0.18 | 14.6 | 406 | - | 4000 |

## IBA52

| $Mn_2$ [Nm] | i | $Pn_1$ [kW] | n2 [rpm] | Fr1 [N] | Fr2 D-S-P [N] | Fr2 C [N] |
|---|---|---|---|---|---|---|
| 164 | 7.91 | 2.58 | 144.1 | 373 | - | 2108 |
| 164 | 9.46 | 2.16 | 120.5 | 414 | - | 2238 |
| 164 | 11.57 | 1.76 | 98.5 | 405 | - | 2393 |
| 164 | 14.63 | 1.40 | 77.9 | 392 | - | 2587 |
| 205 | 17.11 | 1.49 | 66.6 | 529 | - | 2726 |
| 205 | 20.46 | 1.25 | 55.7 | 414 | - | 2894 |
| 205 | 25.03 | 1.02 | 45.5 | 405 | - | 3095 |
| 205 | 31.63 | 0.81 | 36.0 | 392 | - | 3346 |
| 205 | 35.10 | 0.73 | 32.5 | 446 | - | 3464 |
| 205 | 41.97 | 0.61 | 27.2 | 414 | - | 3677 |
| 226 | 51.34 | 0.55 | 22.2 | 445 | - | 3932 |
| 205 | 64.87 | 0.39 | 17.6 | 356 | - | 4000 |
| 205 | 79.07 | 0.32 | 14.4 | 406 | - | 4000 |

## IBA53

| $Mn_2$ [Nm] | i | $Pn_1$ [kW] | n2 [rpm] | Fr1 [N] | Fr2 D-S-P [N] | Fr2 C [N] |
|---|---|---|---|---|---|---|
| 226 | 73.70 | 0.40 | 15.5 | 472 | - | 4000 |
| 226 | 93.33 | 0.32 | 12.2 | 472 | - | 4000 |
| 226 | 111.61 | 0.27 | 10.2 | 472 | - | 4000 |
| 226 | 136.53 | 0.22 | 8.3 | 472 | - | 4000 |
| 226 | 172.53 | 0.17 | 6.6 | 472 | - | 4000 |
| 226 | 197.11 | 0.15 | 5.8 | 472 | - | 4000 |

# 5.4 IB/IBA RIDUTTORE - 1140 RPM



## IBA53

| $Mn_2$ [Nm] | i | $Pn_1$ [kW] | n2 [rpm] | Fr1 [N] | Fr2 D-S-P [N] | Fr2 C [N] |
|---|---|---|---|---|---|---|
| 226 | 249.08 | 0.12 | 4.6 | 472 | - | 4000 |
| 226 | 271.16 | 0.11 | 4.2 | 472 | - | 4000 |
| 226 | 342.65 | 0.09 | 3.3 | 472 | - | 4000 |

## IBA72

| $Mn_2$ [Nm] | i | $Pn_1$ [kW] | n2 [rpm] | Fr1 [N] | Fr2 D-S-P [N] | Fr2 C [N] |
|---|---|---|---|---|---|---|
| 359 | 8.36 | 5.34 | 136.4 | 664 | 5439 | 2720 |
| 359 | 10.06 | 4.44 | 113.3 | 685 | 5786 | 2893 |
| 359 | 12.44 | 3.59 | 91.6 | 667 | 6211 | 3105 |
| 431 | 14.91 | 3.59 | 76.5 | 826 | 6596 | 3298 |
| 431 | 17.94 | 2.98 | 63.5 | 685 | 7017 | 3508 |
| 431 | 22.19 | 2.41 | 51.4 | 667 | 7532 | 3766 |
| 431 | 27.45 | 1.95 | 41.5 | 667 | 8085 | 4043 |
| 431 | 33.04 | 1.62 | 34.5 | 685 | 8600 | 4300 |
| 410 | 40.87 | 1.25 | 27.9 | 635 | 9232 | 4616 |
| 359 | 45.64 | 0.98 | 25.0 | 646 | 9578 | 4789 |
| 359 | 54.94 | 0.81 | 20.8 | 685 | 10000 | 5095 |
| 359 | 67.96 | 0.66 | 16.8 | 667 | 10000 | 5469 |

## IBA73

| $Mn_2$ [Nm] | i | $Pn_1$ [kW] | n2 [rpm] | Fr1 [N] | Fr2 D-S-P [N] | Fr2 C [N] |
|---|---|---|---|---|---|---|
| 461 | 43.89 | 1.38 | 26.0 | 330 | 9454 | 4727 |
| 461 | 52.83 | 1.15 | 21.6 | 411 | 10000 | 5028 |
| 461 | 65.35 | 0.93 | 17.4 | 400 | 10000 | 5398 |
| 461 | 80.83 | 0.75 | 14.1 | 400 | 10000 | 5500 |
| 461 | 97.29 | 0.62 | 11.7 | 411 | 10000 | 5500 |
| 461 | 120.34 | 0.50 | 9.5 | 400 | 10000 | 5500 |
| 461 | 149.73 | 0.40 | 7.6 | 398 | 10000 | 5500 |
| 461 | 180.23 | 0.34 | 6.3 | 411 | 10000 | 5500 |
| 461 | 222.93 | 0.27 | 5.1 | 400 | 10000 | 5500 |
| 461 | 260.20 | 0.23 | 4.4 | 424 | 10000 | 5500 |
| 461 | 321.85 | 0.19 | 3.5 | 400 | 10000 | 5500 |
| 461 | 357.95 | 0.17 | 3.2 | 445 | 10000 | 5500 |
| 461 | 442.76 | 0.14 | 2.6 | 400 | 10000 | 5500 |

# 5.4 IB/IBA RIDUTTORE - 1140 RPM



## IB063

| $Mn_2$ [Nm] | i | $Pn_1$ [kW] | n2 [rpm] | Fr1 [N] | Fr2 D-S-P [N] | Fr2 C [N] |
|---|---|---|---|---|---|---|
| 297 | 5.71 | 6.83 | 199.5 | 292 | 7587 | 2168 |
| 349 | 6.88 | 6.65 | 165.7 | 316 | 7919 | 2263 |
| 359 | 7.32 | 6.43 | 155.7 | 344 | 8070 | 2306 |
| 472 | 9.16 | 6.76 | 124.4 | 301 | 8305 | 2373 |
| 533 | 10.26 | 6.82 | 111.1 | 294 | 8426 | 2407 |
| 554 | 11.03 | 6.59 | 103.4 | 324 | 8593 | 2455 |
| 595 | 12.35 | 6.32 | 92.3 | 359 | 8832 | 2523 |
| 605 | 13.15 | 6.04 | 86.7 | 396 | 9025 | 2579 |
| 605 | 15.18 | 5.23 | 75.1 | 502 | 9594 | 2741 |
| 615 | 17.00 | 4.75 | 67.0 | 566 | 10019 | 2863 |
| 615 | 22.39 | 3.61 | 50.9 | 716 | 11236 | 3210 |
| 615 | 26.09 | 3.10 | 43.7 | 784 | 11961 | 3417 |
| 615 | 28.03 | 2.88 | 40.7 | 812 | 12000 | 3518 |
| 615 | 33.43 | 2.42 | 34.1 | 873 | 12000 | 3776 |
| 615 | 38.58 | 2.09 | 29.6 | 915 | 12000 | 3997 |
| 615 | 43.22 | 1.87 | 26.4 | 945 | 12000 | 4181 |
| 615 | 50.81 | 1.59 | 22.4 | 982 | 12000 | 4453 |
| 615 | 56.93 | 1.42 | 20.0 | 1004 | 12000 | 4654 |
| 615 | 69.16 | 1.17 | 16.5 | 1037 | 12000 | 5015 |
| 615 | 77.48 | 1.04 | 14.7 | 1054 | 12000 | 5237 |
| 615 | 90.33 | 0.89 | 12.6 | 1073 | 12000 | 5550 |
| 615 | 101.20 | 0.80 | 11.3 | 1086 | 12000 | 5793 |
| 615 | 111.74 | 0.72 | 10.2 | 1096 | 12000 | 6012 |
| 615 | 124.20 | 0.65 | 9.2 | 1105 | 12000 | 6253 |
| 615 | 139.15 | 0.58 | 8.2 | 1115 | 12000 | 6522 |
| 615 | 157.42 | 0.51 | 7.2 | 1123 | 12000 | 6826 |

## IB083

| $Mn_2$ [Nm] | i | $Pn_1$ [kW] | n2 [rpm] | Fr1 [N] | Fr2 D-S-P [N] | Fr2 C [N] |
|---|---|---|---|---|---|---|
| 513 | 7.81 | 8.62 | 146.0 | 1652 | 12911 | 3689 |
| 615 | 8.62 | 9.37 | 132.2 | 1535 | 12995 | 3713 |
| 666 | 10.49 | 8.34 | 108.6 | 1696 | 13824 | 3950 |
| 769 | 11.59 | 8.71 | 98.4 | 1638 | 13958 | 3988 |
| 830 | 14.43 | 7.56 | 79.0 | 1818 | 14991 | 4283 |
| 871 | 16.60 | 6.89 | 68.7 | 1922 | 15692 | 4483 |
| 871 | 18.32 | 6.24 | 62.2 | 2023 | 16331 | 4666 |
| 871 | 22.82 | 5.01 | 50.0 | 2216 | 17821 | 5092 |
| 871 | 26.71 | 4.28 | 42.7 | 2330 | 18000 | 5417 |
| 871 | 29.50 | 3.88 | 38.6 | 2393 | 18000 | 5631 |
| 871 | 31.80 | 3.60 | 35.9 | 2437 | 18000 | 5798 |

# 5.4 IB/IBA RIDUTTORE - 1140 RPM



## IB083

| $Mn_2$ [Nm] | i | $Pn_1$ [kW] | n2 [rpm] | Fr1 [N] | Fr2 D-S-P [N] | Fr2 C [N] |
|---|---|---|---|---|---|---|
| 871 | 34.49 | 3.32 | 33.0 | 2481 | 18000 | 5983 |
| 871 | 39.60 | 2.89 | 28.8 | 2500 | 18000 | 6308 |
| 871 | 42.95 | 2.66 | 26.5 | 2500 | 18000 | 6507 |
| 871 | 45.44 | 2.52 | 25.1 | 2500 | 18000 | 6648 |
| 871 | 51.19 | 2.24 | 22.3 | 2500 | 18000 | 6955 |
| 871 | 55.52 | 2.06 | 20.5 | 2500 | 18000 | 7172 |
| 871 | 59.96 | 1.91 | 19.0 | 2500 | 18000 | 7382 |
| 871 | 63.74 | 1.79 | 17.9 | 2500 | 18000 | 7553 |
| 871 | 69.14 | 1.65 | 16.5 | 2500 | 18000 | 7786 |
| 871 | 73.14 | 1.56 | 15.6 | 2500 | 18000 | 7950 |
| 871 | 80.76 | 1.42 | 14.1 | 2500 | 18000 | 8248 |
| 871 | 92.19 | 1.24 | 12.4 | 2500 | 18000 | 8661 |
| 871 | 100.57 | 1.14 | 11.3 | 2500 | 18000 | 8943 |
| 871 | 105.29 | 1.09 | 10.8 | 2500 | 18000 | 9095 |
| 871 | 116.25 | 0.98 | 9.8 | 2500 | 18000 | 9430 |
| 871 | 126.76 | 0.90 | 9.0 | 2500 | 18000 | 9733 |
| 871 | 144.77 | 0.79 | 7.9 | 2500 | 18000 | 10214 |

## IB103

| $Mn_2$ [Nm] | i | $Pn_1$ [kW] | n2 [rpm] | Fr1 [N] | Fr2 D-S-P [N] | Fr2 C [N] |
|---|---|---|---|---|---|---|
| 820 | 8.13 | 13.25 | 140.3 | 1031 | 16015 | 4576 |
| 923 | 8.97 | 13.51 | 127.1 | 992 | 16327 | 4665 |
| 1025 | 10.92 | 12.33 | 104.4 | 1167 | 17307 | 4945 |
| 1025 | 12.05 | 11.17 | 94.6 | 1337 | 17976 | 5136 |
| 1230 | 14.99 | 10.78 | 76.1 | 1394 | 18947 | 5414 |
| 1435 | 17.27 | 10.91 | 66.0 | 1375 | 19436 | 5553 |
| 1435 | 19.06 | 9.89 | 59.8 | 1525 | 20213 | 5775 |
| 1435 | 23.70 | 7.95 | 48.1 | 1810 | 22000 | 6294 |
| 1538 | 26.51 | 7.62 | 43.0 | 1860 | 22000 | 6492 |
| 1640 | 30.55 | 7.05 | 37.3 | 1943 | 22000 | 6779 |
| 1743 | 33.07 | 6.92 | 34.5 | 1962 | 22000 | 6910 |
| 1743 | 35.87 | 6.38 | 31.8 | 2042 | 22000 | 7137 |
| 1743 | 41.12 | 5.56 | 27.7 | 2162 | 22000 | 7532 |
| 1743 | 44.61 | 5.13 | 25.6 | 2226 | 22000 | 7776 |
| 1743 | 47.28 | 4.84 | 24.1 | 2268 | 22000 | 7955 |
| 1743 | 50.24 | 4.55 | 22.7 | 2310 | 22000 | 8144 |
| 1743 | 53.02 | 4.32 | 21.5 | 2345 | 22000 | 8316 |
| 1743 | 58.50 | 3.91 | 19.5 | 2405 | 22000 | 8638 |
| 1743 | 64.89 | 3.53 | 17.6 | 2462 | 22000 | 8988 |
| 1743 | 68.58 | 3.34 | 16.6 | 2490 | 22000 | 9180 |

# 5.4 IB/IBA RIDUTTORE - 1140 RPM



## IB103

| $Mn_2$ [Nm] | i | $Pn_1$ [kW] | n2 [rpm] | Fr1 [N] | Fr2 D-S-P [N] | Fr2 C [N] |
|---|---|---|---|---|---|---|
| 1743 | 72.76 | 3.15 | 15.7 | 2518 | 22000 | 9389 |
| 1743 | 78.92 | 2.90 | 14.4 | 2554 | 22000 | 9683 |
| 1845 | 83.66 | 2.90 | 13.6 | 2554 | 22000 | 9815 |
| 1845 | 92.31 | 2.62 | 12.3 | 2594 | 22000 | 10189 |
| 1845 | 105.44 | 2.30 | 10.8 | 2642 | 22000 | 10714 |
| 1845 | 114.80 | 2.11 | 9.9 | 2670 | 22000 | 11062 |
| 1845 | 120.42 | 2.01 | 9.5 | 2685 | 22000 | 11262 |
| 1845 | 132.87 | 1.82 | 8.6 | 2712 | 22000 | 11684 |
| 1845 | 144.69 | 1.67 | 7.9 | 2734 | 22000 | 12061 |
| 1845 | 165.25 | 1.47 | 6.9 | 2765 | 22000 | 12669 |

## IB123

| $Mn_2$ [Nm] | i | $Pn_1$ [kW] | n2 [rpm] | Fr1 [N] | Fr2 D-S-P [N] | Fr2 C [N] |
|---|---|---|---|---|---|---|
| 1538 | 7.97 | 25.35 | 143.1 | 2525 | 18833 | 5381 |
| 1845 | 9.62 | 25.19 | 118.5 | 2534 | 19084 | 5452 |
| 2050 | 10.33 | 26.05 | 110.3 | 2484 | 18801 | 5372 |
| 2050 | 12.48 | 21.57 | 91.3 | 2745 | 20614 | 5890 |
| 2153 | 13.84 | 20.42 | 82.3 | 2812 | 21189 | 6054 |
| 2153 | 15.38 | 18.38 | 74.1 | 2931 | 22289 | 6368 |
| 2255 | 18.58 | 15.94 | 61.4 | 3073 | 23884 | 6824 |
| 2563 | 20.61 | 16.33 | 55.3 | 3050 | 23665 | 6761 |
| 2870 | 22.78 | 16.54 | 50.0 | 3037 | 23443 | 6698 |
| 2870 | 25.89 | 14.56 | 44.0 | 3153 | 25023 | 7149 |
| 2870 | 27.51 | 13.70 | 41.4 | 3203 | 25796 | 7370 |
| 2870 | 30.79 | 12.24 | 37.0 | 3288 | 27274 | 7793 |
| 2870 | 31.26 | 12.06 | 36.5 | 3299 | 27477 | 7851 |
| 2870 | 34.68 | 10.87 | 32.9 | 3368 | 28895 | 8256 |
| 2870 | 40.53 | 9.30 | 28.1 | 3459 | 30000 | 8890 |
| 3075 | 44.89 | 9.00 | 25.4 | 3477 | 30000 | 9055 |
| 3280 | 49.80 | 8.65 | 22.9 | 3497 | 30000 | 9242 |
| 3280 | 54.30 | 7.93 | 21.0 | 3539 | 30000 | 9634 |
| 3280 | 59.36 | 7.26 | 19.2 | 3578 | 30000 | 10050 |
| 3383 | 62.59 | 7.10 | 18.2 | 3588 | 30000 | 10168 |
| 3383 | 69.43 | 6.40 | 16.4 | 3628 | 30000 | 10678 |
| 3588 | 74.42 | 6.33 | 15.3 | 3632 | 30000 | 10758 |
| 3588 | 80.04 | 5.89 | 14.2 | 3658 | 30000 | 11135 |
| 3588 | 89.87 | 5.24 | 12.7 | 3696 | 30000 | 11752 |
| 3588 | 99.70 | 4.73 | 11.4 | 3726 | 30000 | 12326 |
| 3588 | 106.65 | 4.42 | 10.7 | 3744 | 30000 | 12709 |
| 3588 | 119.60 | 3.94 | 9.5 | 3772 | 30000 | 13380 |

# 5.4 IB/IBA RIDUTTORE - 1140 RPM



## IB123

| $Mn_2$ [Nm] | i | $Pn_1$ [kW] | n2 [rpm] | Fr1 [N] | Fr2 D-S-P [N] | Fr2 C [N] |
|---|---|---|---|---|---|---|
| 3588 | 129.96 | 3.63 | 8.8 | 3790 | 30000 | 13884 |
| 3588 | 144.43 | 3.26 | 7.9 | 3811 | 30000 | 14543 |
| 3588 | 160.23 | 2.94 | 7.1 | 3830 | 30000 | 15214 |
| 3588 | 180.40 | 2.61 | 6.3 | 3849 | 30000 | 16009 |

## IB143

| $Mn_2$ [Nm] | i | $Pn_1$ [kW] | n2 [rpm] | Fr1 [N] | Fr2 D-S-P [N] | Fr2 C [N] |
|---|---|---|---|---|---|---|
| 3075 | 10.84 | 37.25 | 105.2 | 2257 | 17051 | 17051 |
| 3178 | 11.87 | 35.16 | 96.1 | 2355 | 17540 | 17540 |
| 3178 | 14.49 | 28.81 | 78.7 | 2653 | 19421 | 19421 |
| 3280 | 17.04 | 25.28 | 66.9 | 2818 | 20722 | 20722 |
| 3690 | 18.66 | 25.97 | 61.1 | 2785 | 20361 | 20361 |
| 4100 | 21.00 | 25.64 | 54.3 | 2801 | 20331 | 20331 |
| 4510 | 22.77 | 26.01 | 50.1 | 2784 | 19930 | 19930 |
| 4715 | 25.63 | 24.16 | 44.5 | 2870 | 20640 | 20640 |
| 4715 | 27.44 | 22.56 | 41.5 | 2945 | 21455 | 21455 |
| 4818 | 30.05 | 21.06 | 37.9 | 3016 | 22236 | 22236 |
| 4818 | 33.01 | 19.17 | 34.5 | 3104 | 23422 | 23422 |
| 4920 | 36.67 | 17.62 | 31.1 | 3177 | 24465 | 24465 |
| 4920 | 40.29 | 16.04 | 28.3 | 3251 | 25732 | 25732 |
| 4920 | 44.16 | 14.63 | 25.8 | 3317 | 27005 | 27005 |
| 5125 | 48.35 | 13.92 | 23.6 | 3350 | 27648 | 27648 |
| 5125 | 53.16 | 12.66 | 21.4 | 3409 | 29045 | 29045 |
| 5125 | 54.63 | 12.32 | 20.9 | 3425 | 29456 | 29456 |
| 5125 | 59.02 | 11.40 | 19.3 | 3468 | 30639 | 30639 |
| 5125 | 64.88 | 10.37 | 17.6 | 3516 | 32132 | 32132 |
| 5125 | 70.43 | 9.56 | 16.2 | 3555 | 33463 | 33463 |
| 5125 | 77.12 | 8.73 | 14.8 | 3593 | 34976 | 34976 |
| 5125 | 85.54 | 7.87 | 13.3 | 3634 | 36763 | 36763 |
| 5125 | 94.13 | 7.15 | 12.1 | 3667 | 38465 | 38465 |
| 5125 | 105.83 | 6.36 | 10.8 | 3704 | 40000 | 40000 |
| 5125 | 111.94 | 6.01 | 10.2 | 3721 | 40000 | 40000 |
| 5125 | 124.62 | 5.40 | 9.2 | 3749 | 40000 | 40000 |
| 5125 | 136.44 | 4.93 | 8.4 | 3771 | 40000 | 40000 |
| 5125 | 149.59 | 4.50 | 7.6 | 3792 | 40000 | 40000 |
| 5125 | 166.53 | 4.04 | 6.8 | 3813 | 40000 | 40000 |
| 5125 | 187.24 | 3.59 | 6.1 | 3834 | 40000 | 40000 |

# 5.4 IB/IBA RIDUTTORE - 1140 RPM



## IB153

| $Mn_2$ [Nm] | i | $Pn_1$ [kW] | n2 [rpm] | Fr1 [N] | Fr2 D-S-P [N] | Fr2 C [N] |
|---|---|---|---|---|---|---|
| 4613 | 10.49 | 57.73 | 108.7 | 6961 | 35245 | 35245 |
| 4613 | 12.64 | 47.91 | 90.2 | 7457 | 37910 | 37910 |
| 5125 | 14.01 | 48.04 | 81.4 | 7450 | 38700 | 38700 |
| 5125 | 15.40 | 43.70 | 74.0 | 7669 | 40164 | 40164 |
| 6150 | 18.56 | 43.53 | 61.4 | 7678 | 41686 | 41686 |
| 6663 | 20.56 | 42.55 | 55.4 | 7727 | 42683 | 42683 |
| 6868 | 23.86 | 37.80 | 47.8 | 7967 | 45019 | 45019 |
| 6970 | 25.19 | 36.34 | 45.3 | 8041 | 45863 | 45863 |
| 8200 | 28.23 | 38.14 | 40.4 | 7950 | 46211 | 46211 |
| 8200 | 30.35 | 35.48 | 37.6 | 8084 | 47617 | 47617 |
| 8200 | 33.63 | 32.02 | 33.9 | 8259 | 49675 | 49675 |
| 8200 | 35.02 | 30.75 | 32.6 | 8323 | 50502 | 50502 |
| 8200 | 38.81 | 27.75 | 29.4 | 8474 | 52659 | 52659 |
| 8200 | 42.30 | 25.46 | 26.9 | 8590 | 54522 | 54522 |
| 8200 | 47.53 | 22.65 | 24.0 | 8731 | 57136 | 57136 |
| 8200 | 50.56 | 21.30 | 22.6 | 8800 | 58561 | 58561 |
| 8200 | 54.64 | 19.71 | 20.9 | 8880 | 60391 | 60391 |
| 8200 | 57.27 | 18.80 | 19.9 | 8926 | 61524 | 61524 |
| 8200 | 60.92 | 17.68 | 18.7 | 8983 | 63040 | 63040 |
| 8200 | 63.47 | 16.97 | 18.0 | 9019 | 64061 | 64061 |
| 8200 | 71.15 | 15.14 | 16.0 | 9111 | 65000 | 65000 |
| 8200 | 77.22 | 13.94 | 14.8 | 9171 | 65000 | 65000 |
| 8200 | 83.89 | 12.84 | 13.6 | 9227 | 65000 | 65000 |
| 8200 | 87.65 | 12.29 | 13.0 | 9255 | 65000 | 65000 |
| 8200 | 93.05 | 11.57 | 12.2 | 9291 | 65000 | 65000 |
| 8200 | 103.12 | 10.44 | 11.1 | 9348 | 65000 | 65000 |
| 8200 | 123.88 | 8.69 | 9.2 | 9436 | 65000 | 65000 |
| 8200 | 134.27 | 8.02 | 8.5 | 9470 | 65000 | 65000 |
| 8200 | 149.26 | 7.21 | 7.6 | 9511 | 65000 | 65000 |
| 8200 | 165.42 | 6.51 | 6.9 | 9546 | 65000 | 65000 |

## IB163

| $Mn_2$ [Nm] | i | $Pn_1$ [kW] | n2 [rpm] | Fr1 [N] | Fr2 D-S-P [N] | Fr2 C [N] |
|---|---|---|---|---|---|---|
| 6970 | 8.89 | 102.94 | 128.2 | 6992 | 49918 | 49918 |
| 8098 | 10.58 | 100.55 | 107.8 | 7069 | 51605 | 51605 |
| 7893 | 11.87 | 87.32 | 96.0 | 7496 | 54517 | 54517 |
| 9020 | 12.81 | 92.48 | 89.0 | 7330 | 54285 | 54285 |
| 9840 | 14.08 | 91.75 | 81.0 | 7353 | 55080 | 55080 |
| 10250 | 15.52 | 86.72 | 73.5 | 7516 | 56720 | 56720 |
| 10148 | 16.39 | 81.33 | 69.6 | 7690 | 58246 | 58246 |

# 5.4 IB/IBA RIDUTTORE - 1140 RPM



## IB163

| $Mn_2$ [Nm] | i | $Pn_1$ [kW] | n2 [rpm] | Fr1 [N] | Fr2 D-S-P [N] | Fr2 C [N] |
|---|---|---|---|---|---|---|
| 10660 | 18.02 | 77.70 | 63.3 | 7807 | 59766 | 59766 |
| 10968 | 19.96 | 72.17 | 57.1 | 7986 | 61920 | 61920 |
| 10660 | 21.94 | 63.79 | 52.0 | 8257 | 65037 | 65000 |
| 10763 | 24.17 | 58.47 | 47.2 | 8429 | 67572 | 65000 |
| 11378 | 26.58 | 56.22 | 42.9 | 8502 | 69244 | 65000 |
| 10455 | 28.80 | 47.67 | 39.6 | 8778 | 73249 | 65000 |
| 11788 | 30.92 | 50.06 | 36.9 | 8700 | 73095 | 65000 |
| 12198 | 34.25 | 46.76 | 33.3 | 8807 | 75594 | 65000 |
| 12608 | 37.66 | 43.96 | 30.3 | 8897 | 77959 | 65000 |
| 13018 | 40.65 | 42.05 | 28.0 | 8959 | 79796 | 65000 |
| 12300 | 45.09 | 35.82 | 25.3 | 9160 | 80000 | 65000 |
| 13325 | 51.00 | 34.31 | 22.4 | 9209 | 80000 | 65000 |
| 13325 | 53.63 | 32.63 | 21.3 | 9264 | 80000 | 65000 |
| 13325 | 58.97 | 29.68 | 19.3 | 9359 | 80000 | 65000 |
| 13325 | 69.78 | 25.08 | 16.3 | 9508 | 80000 | 65000 |
| 13325 | 76.72 | 22.81 | 14.9 | 9581 | 80000 | 65000 |
| 13325 | 87.54 | 19.99 | 13.0 | 9672 | 80000 | 65000 |
| 13325 | 96.25 | 18.18 | 11.8 | 9730 | 80000 | 65000 |
| 13325 | 103.93 | 16.84 | 11.0 | 9774 | 80000 | 65000 |
| 13325 | 114.27 | 15.31 | 10.0 | 9823 | 80000 | 65000 |
| 13325 | 126.29 | 13.86 | 9.0 | 9870 | 80000 | 65000 |
| 13325 | 138.85 | 12.60 | 8.2 | 9911 | 80000 | 65000 |
| 13325 | 154.83 | 11.30 | 7.4 | 9953 | 80000 | 65000 |

# 5.5 IB/IBA RIDUTTORE - 900 RPM



## IBA42

| $Mn_2$ [Nm] | i | $Pn_1$ [kW] | n2 [rpm] | Fr1 [N] | Fr2 D-S-P [N] | Fr2 C [N] |
|---|---|---|---|---|---|---|
| 95 | 7.62 | 1.22 | 118.2 | 373 | - | 2102 |
| 95 | 10.62 | 0.87 | 84.7 | 355 | - | 2349 |
| 95 | 12.95 | 0.72 | 69.5 | 406 | - | 2509 |
| 95 | 14.46 | 0.64 | 62.2 | 443 | - | 2603 |
| 126 | 16.47 | 0.75 | 54.6 | 579 | - | 2718 |
| 126 | 22.97 | 0.54 | 39.2 | 355 | - | 3037 |
| 126 | 28.00 | 0.44 | 32.1 | 406 | - | 3244 |
| 126 | 31.27 | 0.40 | 28.8 | 443 | - | 3366 |
| 126 | 33.78 | 0.37 | 26.6 | 458 | - | 3454 |
| 126 | 47.12 | 0.26 | 19.1 | 355 | - | 3859 |
| 126 | 57.43 | 0.22 | 15.7 | 406 | - | 4000 |
| 116 | 64.13 | 0.18 | 14.0 | 406 | - | 4000 |
| 116 | 78.17 | 0.15 | 11.5 | 406 | - | 4000 |

## IBA52

| $Mn_2$ [Nm] | i | $Pn_1$ [kW] | n2 [rpm] | Fr1 [N] | Fr2 D-S-P [N] | Fr2 C [N] |
|---|---|---|---|---|---|---|
| 168 | 7.91 | 2.09 | 113.8 | 373 | - | 2281 |
| 168 | 9.46 | 1.74 | 95.1 | 414 | - | 2421 |
| 168 | 11.57 | 1.43 | 77.8 | 405 | - | 2589 |
| 168 | 14.63 | 1.13 | 61.5 | 392 | - | 2799 |
| 210 | 17.11 | 1.21 | 52.6 | 529 | - | 2950 |
| 210 | 20.46 | 1.01 | 44.0 | 414 | - | 3131 |
| 210 | 25.03 | 0.82 | 36.0 | 405 | - | 3349 |
| 210 | 31.63 | 0.65 | 28.4 | 392 | - | 3620 |
| 210 | 35.10 | 0.59 | 25.6 | 446 | - | 3748 |
| 210 | 41.97 | 0.49 | 21.4 | 414 | - | 3978 |
| 231 | 51.34 | 0.44 | 17.5 | 445 | - | 4000 |
| 210 | 64.87 | 0.32 | 13.9 | 356 | - | 4000 |
| 210 | 79.07 | 0.26 | 11.4 | 406 | - | 4000 |

## IBA53

| $Mn_2$ [Nm] | i | $Pn_1$ [kW] | n2 [rpm] | Fr1 [N] | Fr2 D-S-P [N] | Fr2 C [N] |
|---|---|---|---|---|---|---|
| 231 | 73.70 | 0.32 | 12.2 | 472 | - | 4000 |
| 231 | 93.33 | 0.26 | 9.6 | 472 | - | 4000 |
| 231 | 111.61 | 0.21 | 8.1 | 472 | - | 4000 |
| 231 | 136.53 | 0.18 | 6.6 | 472 | - | 4000 |
| 231 | 172.53 | 0.14 | 5.2 | 472 | - | 4000 |
| 231 | 197.11 | 0.12 | 4.6 | 472 | - | 4000 |

# 5.5 IB/IBA RIDUTTORE - 900 RPM



## IBA53

| $Mn_2$ [Nm] | i | $Pn_1$ [kW] | n2 [rpm] | Fr1 [N] | Fr2 D-S-P [N] | Fr2 C [N] |
|---|---|---|---|---|---|---|
| 231 | 249.08 | 0.10 | 3.6 | 472 | - | 4000 |
| 231 | 271.16 | 0.09 | 3.3 | 472 | - | 4000 |
| 231 | 342.65 | 0.07 | 2.6 | 472 | - | 4000 |

## IBA72

| $Mn_2$ [Nm] | i | $Pn_1$ [kW] | n2 [rpm] | Fr1 [N] | Fr2 D-S-P [N] | Fr2 C [N] |
|---|---|---|---|---|---|---|
| 368 | 8.36 | 4.32 | 107.7 | 664 | 5885 | 2942 |
| 368 | 10.06 | 3.59 | 89.5 | 685 | 6260 | 3130 |
| 368 | 12.44 | 2.90 | 72.3 | 667 | 6720 | 3360 |
| 441 | 14.91 | 2.91 | 60.4 | 826 | 7137 | 3568 |
| 441 | 17.94 | 2.41 | 50.2 | 685 | 7592 | 3796 |
| 441 | 22.19 | 1.95 | 40.5 | 667 | 8150 | 4075 |
| 441 | 27.45 | 1.58 | 32.8 | 667 | 8748 | 4374 |
| 441 | 33.04 | 1.31 | 27.2 | 685 | 9306 | 4653 |
| 420 | 40.87 | 1.01 | 22.0 | 635 | 9989 | 4995 |
| 368 | 45.64 | 0.79 | 19.7 | 646 | 10000 | 5182 |
| 368 | 54.94 | 0.66 | 16.4 | 685 | 10000 | 5500 |
| 368 | 67.96 | 0.53 | 13.2 | 667 | 10000 | 5500 |

## IBA73

| $Mn_2$ [Nm] | i | $Pn_1$ [kW] | n2 [rpm] | Fr1 [N] | Fr2 D-S-P [N] | Fr2 C [N] |
|---|---|---|---|---|---|---|
| 473 | 43.89 | 1.12 | 20.5 | 330 | 10000 | 5115 |
| 473 | 52.83 | 0.93 | 17.0 | 411 | 10000 | 5441 |
| 473 | 65.35 | 0.75 | 13.8 | 400 | 10000 | 5500 |
| 473 | 80.83 | 0.61 | 11.1 | 400 | 10000 | 5500 |
| 473 | 97.29 | 0.50 | 9.2 | 411 | 10000 | 5500 |
| 473 | 120.34 | 0.41 | 7.5 | 400 | 10000 | 5500 |
| 473 | 149.73 | 0.33 | 6.0 | 398 | 10000 | 5500 |
| 473 | 180.23 | 0.27 | 5.0 | 411 | 10000 | 5500 |
| 473 | 222.93 | 0.22 | 4.0 | 400 | 10000 | 5500 |
| 473 | 260.20 | 0.19 | 3.5 | 424 | 10000 | 5500 |
| 473 | 321.85 | 0.15 | 2.8 | 400 | 10000 | 5500 |
| 473 | 357.95 | 0.14 | 2.5 | 445 | 10000 | 5500 |
| 473 | 442.76 | 0.11 | 2.0 | 400 | 10000 | 5500 |

# 5.5 IB/IBA RIDUTTORE - 900 RPM



## IB063

| $Mn_2$ [Nm] | i | $Pn_1$ [kW] | n2 [rpm] | Fr1 [N] | Fr2 D-S-P [N] | Fr2 C [N] |
|---|---|---|---|---|---|---|
| 305 | 5.71 | 5.52 | 157.5 | 270 | 8278 | 2365 |
| 357 | 6.88 | 5.38 | 130.8 | 294 | 8651 | 2472 |
| 368 | 7.32 | 5.20 | 122.9 | 324 | 8817 | 2519 |
| 483 | 9.16 | 5.47 | 98.2 | 280 | 9099 | 2600 |
| 546 | 10.26 | 5.52 | 87.7 | 272 | 9246 | 2642 |
| 567 | 11.03 | 5.33 | 81.6 | 302 | 9432 | 2695 |
| 609 | 12.35 | 5.11 | 72.8 | 339 | 9701 | 2772 |
| 620 | 13.15 | 4.88 | 68.4 | 377 | 9913 | 2832 |
| 620 | 15.18 | 4.23 | 59.3 | 485 | 10527 | 3008 |
| 630 | 17.00 | 3.84 | 52.9 | 551 | 10989 | 3140 |
| 630 | 22.39 | 2.92 | 40.2 | 705 | 12000 | 3516 |
| 630 | 26.09 | 2.50 | 34.5 | 774 | 12000 | 3740 |
| 630 | 28.03 | 2.33 | 32.1 | 803 | 12000 | 3849 |
| 630 | 33.43 | 1.95 | 26.9 | 865 | 12000 | 4128 |
| 630 | 38.58 | 1.69 | 23.3 | 909 | 12000 | 4367 |
| 630 | 43.22 | 1.51 | 20.8 | 939 | 12000 | 4565 |
| 630 | 50.81 | 1.29 | 17.7 | 977 | 12000 | 4860 |
| 630 | 56.93 | 1.15 | 15.8 | 1000 | 12000 | 5076 |
| 630 | 69.16 | 0.94 | 13.0 | 1034 | 12000 | 5467 |
| 630 | 77.48 | 0.84 | 11.6 | 1050 | 12000 | 5707 |
| 630 | 90.33 | 0.72 | 10.0 | 1070 | 12000 | 6045 |
| 630 | 101.20 | 0.65 | 8.9 | 1083 | 12000 | 6308 |
| 630 | 111.74 | 0.58 | 8.1 | 1094 | 12000 | 6544 |
| 630 | 124.20 | 0.53 | 7.2 | 1103 | 12000 | 6805 |
| 630 | 139.15 | 0.47 | 6.5 | 1113 | 12000 | 7097 |
| 630 | 157.42 | 0.41 | 5.7 | 1122 | 12000 | 7425 |

## IB083

| $Mn_2$ [Nm] | i | $Pn_1$ [kW] | n2 [rpm] | Fr1 [N] | Fr2 D-S-P [N] | Fr2 C [N] |
|---|---|---|---|---|---|---|
| 525 | 7.81 | 6.97 | 115.2 | 1619 | 14076 | 4022 |
| 630 | 8.62 | 7.57 | 104.4 | 1500 | 14190 | 4054 |
| 683 | 10.49 | 6.74 | 85.8 | 1664 | 15098 | 4314 |
| 788 | 11.59 | 7.05 | 77.7 | 1604 | 15267 | 4362 |
| 851 | 14.43 | 6.11 | 62.4 | 1789 | 16398 | 4685 |
| 893 | 16.60 | 5.58 | 54.2 | 1895 | 17165 | 4904 |
| 893 | 18.32 | 5.05 | 49.1 | 2000 | 17855 | 5102 |
| 893 | 22.82 | 4.06 | 39.4 | 2197 | 18000 | 5562 |
| 893 | 26.71 | 3.46 | 33.7 | 2314 | 18000 | 5914 |
| 893 | 29.50 | 3.14 | 30.5 | 2378 | 18000 | 6145 |
| 893 | 31.80 | 2.91 | 28.3 | 2423 | 18000 | 6325 |

# 5.5 IB/IBA RIDUTTORE - 900 RPM



## IB083

| $Mn_2$ [Nm] | i | $Pn_1$ [kW] | n2 [rpm] | Fr1 [N] | Fr2 D-S-P [N] | Fr2 C [N] |
|---|---|---|---|---|---|---|
| 893 | 34.49 | 2.68 | 26.1 | 2468 | 18000 | 6525 |
| 893 | 39.60 | 2.34 | 22.7 | 2500 | 18000 | 6877 |
| 893 | 42.95 | 2.15 | 20.9 | 2500 | 18000 | 7092 |
| 893 | 45.44 | 2.04 | 19.8 | 2500 | 18000 | 7245 |
| 893 | 51.19 | 1.81 | 17.6 | 2500 | 18000 | 7577 |
| 893 | 55.52 | 1.67 | 16.2 | 2500 | 18000 | 7811 |
| 893 | 59.96 | 1.54 | 15.0 | 2500 | 18000 | 8038 |
| 893 | 63.74 | 1.45 | 14.1 | 2500 | 18000 | 8223 |
| 893 | 69.14 | 1.34 | 13.0 | 2500 | 18000 | 8475 |
| 893 | 73.14 | 1.27 | 12.3 | 2500 | 18000 | 8653 |
| 893 | 80.76 | 1.15 | 11.1 | 2500 | 18000 | 8975 |
| 893 | 92.19 | 1.00 | 9.8 | 2500 | 18000 | 9421 |
| 893 | 100.57 | 0.92 | 8.9 | 2500 | 18000 | 9726 |
| 893 | 105.29 | 0.88 | 8.6 | 2500 | 18000 | 9890 |
| 893 | 116.25 | 0.80 | 7.7 | 2500 | 18000 | 10253 |
| 893 | 126.76 | 0.73 | 7.1 | 2500 | 18000 | 10580 |
| 893 | 144.77 | 0.64 | 6.2 | 2500 | 18000 | 11100 |

## IB103

| $Mn_2$ [Nm] | i | $Pn_1$ [kW] | n2 [rpm] | Fr1 [N] | Fr2 D-S-P [N] | Fr2 C [N] |
|---|---|---|---|---|---|---|
| 840 | 8.13 | 10.72 | 110.7 | 983 | 17448 | 4985 |
| 945 | 8.97 | 10.93 | 100.4 | 944 | 17802 | 5086 |
| 1050 | 10.92 | 9.97 | 82.4 | 1122 | 18879 | 5394 |
| 1050 | 12.05 | 9.03 | 74.7 | 1296 | 19601 | 5600 |
| 1260 | 14.99 | 8.72 | 60.1 | 1356 | 20685 | 5910 |
| 1470 | 17.27 | 8.82 | 52.1 | 1336 | 21247 | 6070 |
| 1470 | 19.06 | 8.00 | 47.2 | 1490 | 22000 | 6311 |
| 1470 | 23.70 | 6.43 | 38.0 | 1782 | 22000 | 6872 |
| 1575 | 26.51 | 6.16 | 34.0 | 1833 | 22000 | 7090 |
| 1680 | 30.55 | 5.70 | 29.5 | 1918 | 22000 | 7406 |
| 1785 | 33.07 | 5.60 | 27.2 | 1937 | 22000 | 7552 |
| 1785 | 35.87 | 5.16 | 25.1 | 2019 | 22000 | 7797 |
| 1785 | 41.12 | 4.50 | 21.9 | 2142 | 22000 | 8224 |
| 1785 | 44.61 | 4.15 | 20.2 | 2207 | 22000 | 8488 |
| 1785 | 47.28 | 3.91 | 19.0 | 2251 | 22000 | 8681 |
| 1785 | 50.24 | 3.68 | 17.9 | 2294 | 22000 | 8886 |
| 1785 | 53.02 | 3.49 | 17.0 | 2330 | 22000 | 9072 |
| 1785 | 58.50 | 3.16 | 15.4 | 2391 | 22000 | 9420 |
| 1785 | 64.89 | 2.85 | 13.9 | 2449 | 22000 | 9798 |
| 1785 | 68.58 | 2.70 | 13.1 | 2478 | 22000 | 10006 |

# 5.5 IB/IBA RIDUTTORE - 900 RPM



## IB103

| $Mn_2$ [Nm] | i | $Pn_1$ [kW] | n2 [rpm] | Fr1 [N] | Fr2 D-S-P [N] | Fr2 C [N] |
|---|---|---|---|---|---|---|
| 1785 | 72.76 | 2.54 | 12.4 | 2506 | 22000 | 10232 |
| 1785 | 78.92 | 2.34 | 11.4 | 2544 | 22000 | 10550 |
| 1890 | 83.66 | 2.34 | 10.8 | 2544 | 22000 | 10697 |
| 1890 | 92.31 | 2.12 | 9.8 | 2585 | 22000 | 11102 |
| 1890 | 105.44 | 1.86 | 8.5 | 2634 | 22000 | 11670 |
| 1890 | 114.80 | 1.71 | 7.8 | 2662 | 22000 | 12046 |
| 1890 | 120.42 | 1.63 | 7.5 | 2677 | 22000 | 12262 |
| 1890 | 132.87 | 1.47 | 6.8 | 2706 | 22000 | 12718 |
| 1890 | 144.69 | 1.35 | 6.2 | 2728 | 22000 | 13125 |
| 1890 | 165.25 | 1.19 | 5.5 | 2760 | 22000 | 13783 |

## IB123

| $Mn_2$ [Nm] | i | $Pn_1$ [kW] | n2 [rpm] | Fr1 [N] | Fr2 D-S-P [N] | Fr2 C [N] |
|---|---|---|---|---|---|---|
| 1575 | 7.97 | 20.50 | 113.0 | 2489 | 20762 | 5932 |
| 1890 | 9.62 | 20.37 | 93.6 | 2498 | 21113 | 6032 |
| 2100 | 10.33 | 21.07 | 87.1 | 2447 | 20861 | 5960 |
| 2100 | 12.48 | 17.45 | 72.1 | 2714 | 22821 | 6520 |
| 2205 | 13.84 | 16.51 | 65.0 | 2783 | 23470 | 6706 |
| 2205 | 15.38 | 14.86 | 58.5 | 2905 | 24658 | 7045 |
| 2310 | 18.58 | 12.89 | 48.5 | 3050 | 26410 | 7546 |
| 2625 | 20.61 | 13.21 | 43.7 | 3027 | 26253 | 7501 |
| 2940 | 22.78 | 13.38 | 39.5 | 3014 | 26094 | 7455 |
| 2940 | 25.89 | 11.77 | 34.8 | 3132 | 27801 | 7943 |
| 2940 | 27.51 | 11.08 | 32.7 | 3184 | 28638 | 8182 |
| 2940 | 30.79 | 9.90 | 29.2 | 3271 | 30000 | 8639 |
| 2940 | 31.26 | 9.75 | 28.8 | 3282 | 30000 | 8701 |
| 2940 | 34.68 | 8.79 | 25.9 | 3353 | 30000 | 9139 |
| 2940 | 40.53 | 7.52 | 22.2 | 3446 | 30000 | 9825 |
| 3150 | 44.89 | 7.27 | 20.1 | 3464 | 30000 | 10019 |
| 3360 | 49.80 | 6.99 | 18.1 | 3485 | 30000 | 10236 |
| 3360 | 54.30 | 6.42 | 16.6 | 3528 | 30000 | 10660 |
| 3360 | 59.36 | 5.87 | 15.2 | 3568 | 30000 | 11110 |
| 3465 | 62.59 | 5.74 | 14.4 | 3578 | 30000 | 11246 |
| 3465 | 69.43 | 5.17 | 13.0 | 3619 | 30000 | 11796 |
| 3675 | 74.42 | 5.12 | 12.1 | 3623 | 30000 | 11899 |
| 3675 | 80.04 | 4.76 | 11.2 | 3650 | 30000 | 12306 |
| 3675 | 89.87 | 4.24 | 10.0 | 3688 | 30000 | 12973 |
| 3675 | 99.70 | 3.82 | 9.0 | 3719 | 30000 | 13593 |
| 3675 | 106.65 | 3.57 | 8.4 | 3738 | 30000 | 14008 |
| 3675 | 119.60 | 3.19 | 7.5 | 3766 | 30000 | 14733 |

# 5.5 IB/IBA RIDUTTORE - 900 RPM



## IB123

| $Mn_2$ [Nm] | i | $Pn_1$ [kW] | n2 [rpm] | Fr1 [N] | Fr2 D-S-P [N] | Fr2 C [N] |
|---|---|---|---|---|---|---|
| 3675 | 129.96 | 2.93 | 6.9 | 3785 | 30000 | 15277 |
| 3675 | 144.43 | 2.64 | 6.2 | 3807 | 30000 | 15990 |
| 3675 | 160.23 | 2.38 | 5.6 | 3826 | 30000 | 16715 |
| 3675 | 180.40 | 2.11 | 5.0 | 3845 | 30000 | 17575 |

## IB143

| $Mn_2$ [Nm] | i | $Pn_1$ [kW] | n2 [rpm] | Fr1 [N] | Fr2 D-S-P [N] | Fr2 C [N] |
|---|---|---|---|---|---|---|
| 3150 | 10.84 | 30.13 | 83.0 | 2214 | 18991 | 18991 |
| 3255 | 11.87 | 28.44 | 75.8 | 2315 | 19538 | 19538 |
| 3255 | 14.49 | 23.30 | 62.1 | 2620 | 21572 | 21572 |
| 3360 | 17.04 | 20.44 | 52.8 | 2789 | 22997 | 22997 |
| 3780 | 18.66 | 21.00 | 48.2 | 2756 | 22681 | 22681 |
| 4200 | 21.00 | 20.74 | 42.9 | 2771 | 22722 | 22722 |
| 4620 | 22.77 | 21.03 | 39.5 | 2754 | 22363 | 22363 |
| 4830 | 25.63 | 19.54 | 35.1 | 2843 | 23168 | 23168 |
| 4830 | 27.44 | 18.25 | 32.8 | 2919 | 24049 | 24049 |
| 4935 | 30.05 | 17.03 | 29.9 | 2992 | 24912 | 24912 |
| 4935 | 33.01 | 15.50 | 27.3 | 3082 | 26194 | 26194 |
| 5040 | 36.67 | 14.25 | 24.5 | 3157 | 27341 | 27341 |
| 5040 | 40.29 | 12.97 | 22.3 | 3233 | 28710 | 28710 |
| 5040 | 44.16 | 11.83 | 20.4 | 3300 | 30087 | 30087 |
| 5250 | 48.35 | 11.26 | 18.6 | 3334 | 30819 | 30819 |
| 5250 | 53.16 | 10.24 | 16.9 | 3395 | 32330 | 32330 |
| 5250 | 54.63 | 9.96 | 16.5 | 3411 | 32773 | 32773 |
| 5250 | 59.02 | 9.22 | 15.2 | 3455 | 34052 | 34052 |
| 5250 | 64.88 | 8.39 | 13.9 | 3504 | 35666 | 35666 |
| 5250 | 70.43 | 7.73 | 12.8 | 3544 | 37106 | 37106 |
| 5250 | 77.12 | 7.06 | 11.7 | 3583 | 38741 | 38741 |
| 5250 | 85.54 | 6.36 | 10.5 | 3625 | 40000 | 40000 |
| 5250 | 94.13 | 5.78 | 9.6 | 3659 | 40000 | 40000 |
| 5250 | 105.83 | 5.14 | 8.5 | 3697 | 40000 | 40000 |
| 5250 | 111.94 | 4.86 | 8.0 | 3714 | 40000 | 40000 |
| 5250 | 124.62 | 4.37 | 7.2 | 3743 | 40000 | 40000 |
| 5250 | 136.44 | 3.99 | 6.6 | 3766 | 40000 | 40000 |
| 5250 | 149.59 | 3.64 | 6.0 | 3786 | 40000 | 40000 |
| 5250 | 166.53 | 3.27 | 5.4 | 3808 | 40000 | 40000 |
| 5250 | 187.24 | 2.91 | 4.8 | 3830 | 40000 | 40000 |

# 5.5 IB/IBA RIDUTTORE - 900 RPM



## IB153

| $Mn_2$ [Nm] | i | $Pn_1$ [kW] | n2 [rpm] | Fr1 [N] | Fr2 D-S-P [N] | Fr2 C [N] |
|---|---|---|---|---|---|---|
| 4725 | 10.49 | 46.69 | 85.8 | 6890 | 38488 | 38488 |
| 4725 | 12.64 | 38.75 | 71.2 | 7398 | 41370 | 41370 |
| 5250 | 14.01 | 38.85 | 64.2 | 7391 | 42266 | 42266 |
| 5250 | 15.40 | 35.34 | 58.4 | 7615 | 43850 | 43850 |
| 6300 | 18.56 | 35.20 | 48.5 | 7624 | 45580 | 45580 |
| 6825 | 20.56 | 34.41 | 43.8 | 7675 | 46701 | 46701 |
| 7035 | 23.86 | 30.57 | 37.7 | 7920 | 49243 | 49243 |
| 7140 | 25.19 | 29.39 | 35.7 | 7996 | 50164 | 50164 |
| 8400 | 28.23 | 30.85 | 31.9 | 7903 | 50642 | 50642 |
| 8400 | 30.35 | 28.70 | 29.7 | 8040 | 52163 | 52163 |
| 8400 | 33.63 | 25.89 | 26.8 | 8219 | 54387 | 54387 |
| 8400 | 35.02 | 24.87 | 25.7 | 8285 | 55282 | 55282 |
| 8400 | 38.81 | 22.44 | 23.2 | 8440 | 57613 | 57613 |
| 8400 | 42.30 | 20.59 | 21.3 | 8559 | 59628 | 59628 |
| 8400 | 47.53 | 18.32 | 18.9 | 8704 | 62454 | 62454 |
| 8400 | 50.56 | 17.22 | 17.8 | 8774 | 63995 | 63995 |
| 8400 | 54.64 | 15.94 | 16.5 | 8856 | 65000 | 65000 |
| 8400 | 57.27 | 15.21 | 15.7 | 8903 | 65000 | 65000 |
| 8400 | 60.92 | 14.29 | 14.8 | 8961 | 65000 | 65000 |
| 8400 | 63.47 | 13.72 | 14.2 | 8998 | 65000 | 65000 |
| 8400 | 71.15 | 12.24 | 12.7 | 9092 | 65000 | 65000 |
| 8400 | 77.22 | 11.28 | 11.7 | 9154 | 65000 | 65000 |
| 8400 | 83.89 | 10.38 | 10.7 | 9211 | 65000 | 65000 |
| 8400 | 87.65 | 9.94 | 10.3 | 9240 | 65000 | 65000 |
| 8400 | 93.05 | 9.36 | 9.7 | 9277 | 65000 | 65000 |
| 8400 | 103.12 | 8.45 | 8.7 | 9335 | 65000 | 65000 |
| 8400 | 123.88 | 7.03 | 7.3 | 9425 | 65000 | 65000 |
| 8400 | 134.27 | 6.49 | 6.7 | 9460 | 65000 | 65000 |
| 8400 | 149.26 | 5.83 | 6.0 | 9502 | 65000 | 65000 |
| 8400 | 165.42 | 5.26 | 5.4 | 9538 | 65000 | 65000 |

## IB163

| $Mn_2$ [Nm] | i | $Pn_1$ [kW] | n2 [rpm] | Fr1 [N] | Fr2 D-S-P [N] | Fr2 C [N] |
|---|---|---|---|---|---|---|
| 7140 | 8.89 | 83.25 | 101.2 | 6911 | 54659 | 54659 |
| 8295 | 10.58 | 81.32 | 85.1 | 6990 | 56595 | 56595 |
| 8085 | 11.87 | 70.62 | 75.8 | 7428 | 59722 | 59722 |
| 9240 | 12.81 | 74.79 | 70.3 | 7257 | 59584 | 59584 |
| 10080 | 14.08 | 74.20 | 63.9 | 7281 | 60524 | 60524 |
| 10500 | 15.52 | 70.13 | 58.0 | 7448 | 62338 | 62338 |
| 10395 | 16.39 | 65.77 | 54.9 | 7626 | 63977 | 63977 |

# 5.5 IB/IBA RIDUTTORE - 900 RPM



## IB163

| $Mn_2$ [Nm] | i | $Pn_1$ [kW] | n2 [rpm] | Fr1 [N] | Fr2 D-S-P [N] | Fr2 C [N] |
|---|---|---|---|---|---|---|
| 10920 | 18.02 | 62.84 | 50.0 | 7746 | 65672 | 65000 |
| 11235 | 19.96 | 58.37 | 45.1 | 7929 | 68031 | 65000 |
| 10920 | 21.94 | 51.59 | 41.0 | 8206 | 71371 | 65000 |
| 11025 | 24.17 | 47.29 | 37.2 | 8383 | 74121 | 65000 |
| 11655 | 26.58 | 45.46 | 33.9 | 8457 | 75990 | 65000 |
| 10710 | 28.80 | 38.55 | 31.2 | 8740 | 80000 | 65000 |
| 12075 | 30.92 | 40.48 | 29.1 | 8661 | 80000 | 65000 |
| 12495 | 34.25 | 37.82 | 26.3 | 8770 | 80000 | 65000 |
| 12915 | 37.66 | 35.55 | 23.9 | 8863 | 80000 | 65000 |
| 13335 | 40.65 | 34.01 | 22.1 | 8926 | 80000 | 65000 |
| 12600 | 45.09 | 28.97 | 20.0 | 9132 | 80000 | 65000 |
| 13650 | 51.00 | 27.75 | 17.6 | 9182 | 80000 | 65000 |
| 13650 | 53.63 | 26.39 | 16.8 | 9238 | 80000 | 65000 |
| 13650 | 58.97 | 24.00 | 15.3 | 9336 | 80000 | 65000 |
| 13650 | 69.78 | 20.28 | 12.9 | 9488 | 80000 | 65000 |
| 13650 | 76.72 | 18.45 | 11.7 | 9563 | 80000 | 65000 |
| 13650 | 87.54 | 16.17 | 10.3 | 9656 | 80000 | 65000 |
| 13650 | 96.25 | 14.70 | 9.3 | 9716 | 80000 | 65000 |
| 13650 | 103.93 | 13.62 | 8.7 | 9761 | 80000 | 65000 |
| 13650 | 114.27 | 12.38 | 7.9 | 9811 | 80000 | 65000 |
| 13650 | 126.29 | 11.21 | 7.1 | 9859 | 80000 | 65000 |
| 13650 | 138.85 | 10.19 | 6.5 | 9901 | 80000 | 65000 |
| 13650 | 154.83 | 9.14 | 5.8 | 9944 | 80000 | 65000 |

# 5.6 IB/IBA RIDUTTORE - 700 RPM



## IBA42

| $Mn_2$ [Nm] | i | $Pn_1$ [kW] | n2 [rpm] | Fr1 [N] | Fr2 D-S-P [N] | Fr2 C [N] |
|---|---|---|---|---|---|---|
| 96 | 7.62 | 0.95 | 91.9 | 373 | - | 2286 |
| 96 | 10.62 | 0.68 | 65.9 | 355 | - | 2554 |
| 96 | 12.95 | 0.56 | 54.1 | 406 | - | 2728 |
| 96 | 14.46 | 0.50 | 48.4 | 443 | - | 2830 |
| 128 | 16.47 | 0.59 | 42.5 | 579 | - | 2956 |
| 128 | 22.97 | 0.42 | 30.5 | 355 | - | 3303 |
| 128 | 28.00 | 0.35 | 25.0 | 406 | - | 3528 |
| 128 | 31.27 | 0.31 | 22.4 | 443 | - | 3660 |
| 128 | 33.78 | 0.29 | 20.7 | 458 | - | 3756 |
| 128 | 47.12 | 0.21 | 14.9 | 355 | - | 4000 |
| 128 | 57.43 | 0.17 | 12.2 | 406 | - | 4000 |
| 117 | 64.13 | 0.14 | 10.9 | 406 | - | 4000 |
| 117 | 78.17 | 0.11 | 9.0 | 406 | - | 4000 |

## IBA52

| $Mn_2$ [Nm] | i | $Pn_1$ [kW] | n2 [rpm] | Fr1 [N] | Fr2 D-S-P [N] | Fr2 C [N] |
|---|---|---|---|---|---|---|
| 170 | 7.91 | 1.63 | 88.5 | 373 | - | 2480 |
| 170 | 9.46 | 1.37 | 74.0 | 414 | - | 2633 |
| 170 | 11.57 | 1.12 | 60.5 | 405 | - | 2816 |
| 170 | 14.63 | 0.88 | 47.9 | 392 | - | 3044 |
| 213 | 17.11 | 0.94 | 40.9 | 529 | - | 3208 |
| 213 | 20.46 | 0.79 | 34.2 | 414 | - | 3405 |
| 213 | 25.03 | 0.65 | 28.0 | 405 | - | 3641 |
| 213 | 31.63 | 0.51 | 22.1 | 392 | - | 3936 |
| 213 | 35.10 | 0.46 | 19.9 | 446 | - | 4000 |
| 213 | 41.97 | 0.38 | 16.7 | 414 | - | 4000 |
| 234 | 51.34 | 0.35 | 13.6 | 445 | - | 4000 |
| 213 | 64.87 | 0.25 | 10.8 | 356 | - | 4000 |
| 213 | 79.07 | 0.20 | 8.8 | 406 | - | 4000 |

## IBA53

| $Mn_2$ [Nm] | i | $Pn_1$ [kW] | n2 [rpm] | Fr1 [N] | Fr2 D-S-P [N] | Fr2 C [N] |
|---|---|---|---|---|---|---|
| 234 | 73.70 | 0.25 | 9.5 | 472 | - | 4000 |
| 234 | 93.33 | 0.20 | 7.5 | 472 | - | 4000 |
| 234 | 111.61 | 0.17 | 6.3 | 472 | - | 4000 |
| 234 | 136.53 | 0.14 | 5.1 | 472 | - | 4000 |
| 234 | 172.53 | 0.11 | 4.1 | 472 | - | 4000 |
| 234 | 197.11 | 0.10 | 3.5 | 472 | - | 4000 |

# 5.6 IB/IBA RIDUTTORE - 700 RPM



## IBA53

| $Mn_2$ [Nm] | i | $Pn_1$ [kW] | n2 [rpm] | Fr1 [N] | Fr2 D-S-P [N] | Fr2 C [N] |
|---|---|---|---|---|---|---|
| 234 | 249.08 | 0.08 | 2.8 | 472 | - | 4000 |
| 234 | 271.16 | 0.07 | 2.6 | 472 | - | 4000 |
| 234 | 342.65 | 0.05 | 2.0 | 472 | - | 4000 |

## IBA72

| $Mn_2$ [Nm] | i | $Pn_1$ [kW] | n2 [rpm] | Fr1 [N] | Fr2 D-S-P [N] | Fr2 C [N] |
|---|---|---|---|---|---|---|
| 372 | 8.36 | 3.38 | 83.8 | 664 | 6399 | 3200 |
| 372 | 10.06 | 2.81 | 69.6 | 685 | 6807 | 3404 |
| 372 | 12.44 | 2.27 | 56.3 | 667 | 7307 | 3654 |
| 446 | 14.91 | 2.28 | 47.0 | 826 | 7761 | 3880 |
| 446 | 17.94 | 1.89 | 39.0 | 685 | 8255 | 4128 |
| 446 | 22.19 | 1.53 | 31.5 | 667 | 8862 | 4431 |
| 446 | 27.45 | 1.24 | 25.5 | 667 | 9512 | 4756 |
| 446 | 33.04 | 1.03 | 21.2 | 685 | 10000 | 5059 |
| 425 | 40.87 | 0.79 | 17.1 | 635 | 10000 | 5431 |
| 372 | 45.64 | 0.62 | 15.3 | 646 | 10000 | 5500 |
| 372 | 54.94 | 0.51 | 12.7 | 685 | 10000 | 5500 |
| 372 | 67.96 | 0.42 | 10.3 | 667 | 10000 | 5500 |

## IBA73

| $Mn_2$ [Nm] | i | $Pn_1$ [kW] | n2 [rpm] | Fr1 [N] | Fr2 D-S-P [N] | Fr2 C [N] |
|---|---|---|---|---|---|---|
| 478 | 43.89 | 0.87 | 15.9 | 330 | 10000 | 5500 |
| 478 | 52.83 | 0.73 | 13.2 | 411 | 10000 | 5500 |
| 478 | 65.35 | 0.59 | 10.7 | 400 | 10000 | 5500 |
| 478 | 80.83 | 0.47 | 8.7 | 400 | 10000 | 5500 |
| 478 | 97.29 | 0.39 | 7.2 | 411 | 10000 | 5500 |
| 478 | 120.34 | 0.32 | 5.8 | 400 | 10000 | 5500 |
| 478 | 149.73 | 0.26 | 4.7 | 398 | 10000 | 5500 |
| 478 | 180.23 | 0.21 | 3.9 | 411 | 10000 | 5500 |
| 478 | 222.93 | 0.17 | 3.1 | 400 | 10000 | 5500 |
| 478 | 260.20 | 0.15 | 2.7 | 424 | 10000 | 5500 |
| 478 | 321.85 | 0.12 | 2.2 | 400 | 10000 | 5500 |
| 478 | 357.95 | 0.11 | 2.0 | 445 | 10000 | 5500 |
| 478 | 442.76 | 0.09 | 1.6 | 400 | 10000 | 5500 |

# 5.6 IB/IBA RIDUTTORE - 700 RPM



## IB063

| $Mn_2$ [Nm] | i | $Pn_1$ [kW] | n2 [rpm] | Fr1 [N] | Fr2 D-S-P [N] | Fr2 C [N] |
|---|---|---|---|---|---|---|
| 308 | 5.71 | 4.33 | 122.5 | 259 | 9097 | 2599 |
| 361 | 6.88 | 4.21 | 101.8 | 283 | 9519 | 2720 |
| 372 | 7.32 | 4.07 | 95.6 | 313 | 9703 | 2772 |
| 489 | 9.16 | 4.28 | 76.4 | 269 | 10049 | 2871 |
| 553 | 10.26 | 4.32 | 68.2 | 261 | 10229 | 2923 |
| 574 | 11.03 | 4.17 | 63.5 | 292 | 10438 | 2982 |
| 616 | 12.35 | 4.00 | 56.7 | 329 | 10744 | 3070 |
| 627 | 13.15 | 3.82 | 53.2 | 367 | 10978 | 3137 |
| 627 | 15.18 | 3.31 | 46.1 | 477 | 11646 | 3327 |
| 638 | 17.00 | 3.01 | 41.2 | 543 | 12000 | 3472 |
| 638 | 22.39 | 2.28 | 31.3 | 699 | 12000 | 3880 |
| 638 | 26.09 | 1.96 | 26.8 | 769 | 12000 | 4124 |
| 638 | 28.03 | 1.82 | 25.0 | 798 | 12000 | 4242 |
| 638 | 33.43 | 1.53 | 20.9 | 861 | 12000 | 4545 |
| 638 | 38.58 | 1.33 | 18.1 | 905 | 12000 | 4805 |
| 638 | 43.22 | 1.18 | 16.2 | 936 | 12000 | 5020 |
| 638 | 50.81 | 1.01 | 13.8 | 974 | 12000 | 5340 |
| 638 | 56.93 | 0.90 | 12.3 | 997 | 12000 | 5576 |
| 638 | 69.16 | 0.74 | 10.1 | 1032 | 12000 | 6000 |
| 638 | 77.48 | 0.66 | 9.0 | 1049 | 12000 | 6261 |
| 638 | 90.33 | 0.57 | 7.8 | 1069 | 12000 | 6629 |
| 638 | 101.20 | 0.51 | 6.9 | 1082 | 12000 | 6914 |
| 638 | 111.74 | 0.46 | 6.3 | 1092 | 12000 | 7171 |
| 638 | 124.20 | 0.41 | 5.6 | 1102 | 12000 | 7454 |
| 638 | 139.15 | 0.37 | 5.0 | 1112 | 12000 | 7771 |
| 638 | 157.42 | 0.32 | 4.5 | 1121 | 12000 | 8000 |

## IB083

| $Mn_2$ [Nm] | i | $Pn_1$ [kW] | n2 [rpm] | Fr1 [N] | Fr2 D-S-P [N] | Fr2 C [N] |
|---|---|---|---|---|---|---|
| 531 | 7.81 | 5.46 | 89.6 | 1603 | 15452 | 4415 |
| 638 | 8.62 | 5.93 | 81.2 | 1482 | 15607 | 4459 |
| 691 | 10.49 | 5.28 | 66.7 | 1648 | 16610 | 4746 |
| 797 | 11.59 | 5.52 | 60.4 | 1588 | 16825 | 4807 |
| 861 | 14.43 | 4.79 | 48.5 | 1775 | 18000 | 5163 |
| 903 | 16.60 | 4.37 | 42.2 | 1882 | 18000 | 5405 |
| 903 | 18.32 | 3.95 | 38.2 | 1988 | 18000 | 5620 |
| 903 | 22.82 | 3.18 | 30.7 | 2187 | 18000 | 6120 |
| 903 | 26.71 | 2.71 | 26.2 | 2306 | 18000 | 6502 |
| 903 | 29.50 | 2.46 | 23.7 | 2371 | 18000 | 6753 |
| 903 | 31.80 | 2.28 | 22.0 | 2417 | 18000 | 6949 |

# 5.6 IB/IBA RIDUTTORE - 700 RPM



## IB083

| $Mn_2$ [Nm] | i | $Pn_1$ [kW] | n2 [rpm] | Fr1 [N] | Fr2 D-S-P [N] | Fr2 C [N] |
|---|---|---|---|---|---|---|
| 903 | 34.49 | 2.10 | 20.3 | 2462 | 18000 | 7166 |
| 903 | 39.60 | 1.83 | 17.7 | 2500 | 18000 | 7549 |
| 903 | 42.95 | 1.69 | 16.3 | 2500 | 18000 | 7783 |
| 903 | 45.44 | 1.59 | 15.4 | 2500 | 18000 | 7948 |
| 903 | 51.19 | 1.42 | 13.7 | 2500 | 18000 | 8309 |
| 903 | 55.52 | 1.31 | 12.6 | 2500 | 18000 | 8563 |
| 903 | 59.96 | 1.21 | 11.7 | 2500 | 18000 | 8810 |
| 903 | 63.74 | 1.14 | 11.0 | 2500 | 18000 | 9011 |
| 903 | 69.14 | 1.05 | 10.1 | 2500 | 18000 | 9284 |
| 903 | 73.14 | 0.99 | 9.6 | 2500 | 18000 | 9478 |
| 903 | 80.76 | 0.90 | 8.7 | 2500 | 18000 | 9828 |
| 903 | 92.19 | 0.79 | 7.6 | 2500 | 18000 | 10313 |
| 903 | 100.57 | 0.72 | 7.0 | 2500 | 18000 | 10644 |
| 903 | 105.29 | 0.69 | 6.7 | 2500 | 18000 | 10822 |
| 903 | 116.25 | 0.62 | 6.0 | 2500 | 18000 | 11216 |
| 903 | 126.76 | 0.57 | 5.5 | 2500 | 18000 | 11571 |
| 903 | 144.77 | 0.50 | 4.8 | 2500 | 18000 | 12000 |

## IB103

| $Mn_2$ [Nm] | i | $Pn_1$ [kW] | n2 [rpm] | Fr1 [N] | Fr2 D-S-P [N] | Fr2 C [N] |
|---|---|---|---|---|---|---|
| 850 | 8.13 | 8.39 | 86.1 | 959 | 19137 | 5468 |
| 956 | 8.97 | 8.56 | 78.1 | 920 | 19544 | 5584 |
| 1063 | 10.92 | 7.81 | 64.1 | 1100 | 20736 | 5925 |
| 1063 | 12.05 | 7.08 | 58.1 | 1276 | 21522 | 6149 |
| 1275 | 14.99 | 6.83 | 46.7 | 1336 | 22000 | 6498 |
| 1488 | 17.27 | 6.91 | 40.5 | 1316 | 22000 | 6685 |
| 1488 | 19.06 | 6.26 | 36.7 | 1472 | 22000 | 6946 |
| 1488 | 23.70 | 5.04 | 29.5 | 1768 | 22000 | 7556 |
| 1594 | 26.51 | 4.82 | 26.4 | 1819 | 22000 | 7800 |
| 1700 | 30.55 | 4.46 | 22.9 | 1905 | 22000 | 8149 |
| 1806 | 33.07 | 4.38 | 21.2 | 1925 | 22000 | 8314 |
| 1806 | 35.87 | 4.04 | 19.5 | 2007 | 22000 | 8581 |
| 1806 | 41.12 | 3.52 | 17.0 | 2132 | 22000 | 9045 |
| 1806 | 44.61 | 3.25 | 15.7 | 2198 | 22000 | 9331 |
| 1806 | 47.28 | 3.07 | 14.8 | 2242 | 22000 | 9541 |
| 1806 | 50.24 | 2.88 | 13.9 | 2286 | 22000 | 9764 |
| 1806 | 53.02 | 2.73 | 13.2 | 2322 | 22000 | 9966 |
| 1806 | 58.50 | 2.48 | 12.0 | 2384 | 22000 | 10344 |
| 1806 | 64.89 | 2.23 | 10.8 | 2443 | 22000 | 10755 |
| 1806 | 68.58 | 2.11 | 10.2 | 2472 | 22000 | 10980 |

# 5.6 IB/IBA RIDUTTORE - 700 RPM



## IB103

| $Mn_2$ [Nm] | i | $Pn_1$ [kW] | n2 [rpm] | Fr1 [N] | Fr2 D-S-P [N] | Fr2 C [N] |
|---|---|---|---|---|---|---|
| 1806 | 72.76 | 1.99 | 9.6 | 2501 | 22000 | 11226 |
| 1806 | 78.92 | 1.84 | 8.9 | 2538 | 22000 | 11572 |
| 1913 | 83.66 | 1.83 | 8.4 | 2539 | 22000 | 11738 |
| 1913 | 92.31 | 1.66 | 7.6 | 2580 | 22000 | 12177 |
| 1913 | 105.44 | 1.46 | 6.6 | 2630 | 22000 | 12794 |
| 1913 | 114.80 | 1.34 | 6.1 | 2659 | 22000 | 13203 |
| 1913 | 120.42 | 1.27 | 5.8 | 2674 | 22000 | 13438 |
| 1913 | 132.87 | 1.15 | 5.3 | 2702 | 22000 | 13933 |
| 1913 | 144.69 | 1.06 | 4.8 | 2725 | 22000 | 14376 |
| 1913 | 165.25 | 0.93 | 4.2 | 2757 | 22000 | 15000 |

## IB123

| $Mn_2$ [Nm] | i | $Pn_1$ [kW] | n2 [rpm] | Fr1 [N] | Fr2 D-S-P [N] | Fr2 C [N] |
|---|---|---|---|---|---|---|
| 1594 | 7.97 | 16.05 | 87.9 | 2471 | 23098 | 6599 |
| 1913 | 9.62 | 15.95 | 72.8 | 2480 | 23587 | 6739 |
| 2125 | 10.33 | 16.50 | 67.7 | 2428 | 23384 | 6681 |
| 2125 | 12.48 | 13.66 | 56.1 | 2699 | 25514 | 7290 |
| 2231 | 13.84 | 12.93 | 50.6 | 2768 | 26255 | 7501 |
| 2231 | 15.38 | 11.64 | 45.5 | 2892 | 27546 | 7870 |
| 2338 | 18.58 | 10.10 | 37.7 | 3039 | 29486 | 8425 |
| 2656 | 20.61 | 10.34 | 34.0 | 3015 | 29423 | 8407 |
| 2975 | 22.78 | 10.48 | 30.7 | 3002 | 29358 | 8388 |
| 2975 | 25.89 | 9.22 | 27.0 | 3122 | 30000 | 8918 |
| 2975 | 27.51 | 8.68 | 25.4 | 3174 | 30000 | 9178 |
| 2975 | 30.79 | 7.75 | 22.7 | 3262 | 30000 | 9674 |
| 2975 | 31.26 | 7.64 | 22.4 | 3273 | 30000 | 9742 |
| 2975 | 34.68 | 6.88 | 20.2 | 3345 | 30000 | 10217 |
| 2975 | 40.53 | 5.89 | 17.3 | 3440 | 30000 | 10963 |
| 3188 | 44.89 | 5.70 | 15.6 | 3458 | 30000 | 11193 |
| 3400 | 49.80 | 5.48 | 14.1 | 3479 | 30000 | 11450 |
| 3400 | 54.30 | 5.02 | 12.9 | 3522 | 30000 | 11911 |
| 3400 | 59.36 | 4.60 | 11.8 | 3563 | 30000 | 12399 |
| 3506 | 62.59 | 4.50 | 11.2 | 3573 | 30000 | 12557 |
| 3506 | 69.43 | 4.05 | 10.1 | 3615 | 30000 | 13155 |
| 3719 | 74.42 | 4.01 | 9.4 | 3619 | 30000 | 13287 |
| 3719 | 80.04 | 3.73 | 8.8 | 3646 | 30000 | 13729 |
| 3719 | 89.87 | 3.32 | 7.8 | 3685 | 30000 | 14454 |
| 3719 | 99.70 | 2.99 | 7.0 | 3716 | 30000 | 15128 |
| 3719 | 106.65 | 2.80 | 6.6 | 3734 | 30000 | 15579 |
| 3719 | 119.60 | 2.49 | 5.8 | 3763 | 30000 | 16367 |

# 5.6 IB/IBA RIDUTTORE - 700 RPM



## IB123

| $Mn_2$ [Nm] | i | $Pn_1$ [kW] | n2 [rpm] | Fr1 [N] | Fr2 D-S-P [N] | Fr2 C [N] |
|---|---|---|---|---|---|---|
| 3719 | 129.96 | 2.30 | 5.4 | 3782 | 30000 | 16958 |
| 3719 | 144.43 | 2.07 | 4.8 | 3804 | 30000 | 17732 |
| 3719 | 160.23 | 1.86 | 4.4 | 3824 | 30000 | 18520 |
| 3719 | 180.40 | 1.65 | 3.9 | 3843 | 30000 | 19455 |

## IB143

| $Mn_2$ [Nm] | i | $Pn_1$ [kW] | n2 [rpm] | Fr1 [N] | Fr2 D-S-P [N] | Fr2 C [N] |
|---|---|---|---|---|---|---|
| 3188 | 10.84 | 23.60 | 64.6 | 2193 | 21383 | 21383 |
| 3294 | 11.87 | 22.27 | 59.0 | 2294 | 22002 | 22002 |
| 3294 | 14.49 | 18.25 | 48.3 | 2603 | 24212 | 24212 |
| 3400 | 17.04 | 16.01 | 41.1 | 2775 | 25785 | 25785 |
| 3825 | 18.66 | 16.45 | 37.5 | 2741 | 25542 | 25542 |
| 4250 | 21.00 | 16.24 | 33.3 | 2757 | 25686 | 25686 |
| 4675 | 22.77 | 16.47 | 30.7 | 2739 | 25396 | 25396 |
| 4888 | 25.63 | 15.30 | 27.3 | 2829 | 26320 | 26320 |
| 4888 | 27.44 | 14.29 | 25.5 | 2906 | 27277 | 27277 |
| 4994 | 30.05 | 13.34 | 23.3 | 2980 | 28240 | 28240 |
| 4994 | 33.01 | 12.14 | 21.2 | 3071 | 29633 | 29633 |
| 5100 | 36.67 | 11.16 | 19.1 | 3147 | 30904 | 30904 |
| 5100 | 40.29 | 10.16 | 17.4 | 3223 | 32391 | 32391 |
| 5100 | 44.16 | 9.27 | 15.8 | 3292 | 33887 | 33887 |
| 5313 | 48.35 | 8.82 | 14.5 | 3326 | 34732 | 34732 |
| 5313 | 53.16 | 8.02 | 13.2 | 3387 | 36374 | 36374 |
| 5313 | 54.63 | 7.80 | 12.8 | 3404 | 36856 | 36856 |
| 5313 | 59.02 | 7.22 | 11.9 | 3448 | 38246 | 38246 |
| 5313 | 64.88 | 6.57 | 10.8 | 3499 | 39999 | 39999 |
| 5313 | 70.43 | 6.05 | 9.9 | 3538 | 40000 | 40000 |
| 5313 | 77.12 | 5.53 | 9.1 | 3578 | 40000 | 40000 |
| 5313 | 85.54 | 4.98 | 8.2 | 3620 | 40000 | 40000 |
| 5313 | 94.13 | 4.53 | 7.4 | 3655 | 40000 | 40000 |
| 5313 | 105.83 | 4.03 | 6.6 | 3693 | 40000 | 40000 |
| 5313 | 111.94 | 3.81 | 6.2 | 3710 | 40000 | 40000 |
| 5313 | 124.62 | 3.42 | 5.6 | 3740 | 40000 | 40000 |
| 5313 | 136.44 | 3.12 | 5.1 | 3763 | 40000 | 40000 |
| 5313 | 149.59 | 2.85 | 4.7 | 3784 | 40000 | 40000 |
| 5313 | 166.53 | 2.56 | 4.2 | 3806 | 40000 | 40000 |
| 5313 | 187.24 | 2.28 | 3.7 | 3828 | 40000 | 40000 |

# 5.6 IB/IBA RIDUTTORE - 700 RPM



## IB153

| $Mn_2$ [Nm] | i | $Pn_1$ [kW] | n2 [rpm] | Fr1 [N] | Fr2 D-S-P [N] | Fr2 C [N] |
|---|---|---|---|---|---|---|
| 4781 | 10.49 | 36.56 | 66.7 | 6854 | 42333 | 42333 |
| 4781 | 12.64 | 30.35 | 55.4 | 7368 | 45464 | 45464 |
| 5313 | 14.01 | 30.43 | 50.0 | 7362 | 46495 | 46495 |
| 5313 | 15.40 | 27.68 | 45.5 | 7588 | 48216 | 48216 |
| 6375 | 18.56 | 27.57 | 37.7 | 7598 | 50211 | 50211 |
| 6906 | 20.56 | 26.95 | 34.0 | 7649 | 51486 | 51486 |
| 7119 | 23.86 | 23.94 | 29.3 | 7897 | 54271 | 54271 |
| 7225 | 25.19 | 23.02 | 27.8 | 7974 | 55283 | 55283 |
| 8500 | 28.23 | 24.16 | 24.8 | 7879 | 55940 | 55940 |
| 8500 | 30.35 | 22.47 | 23.1 | 8018 | 57593 | 57593 |
| 8500 | 33.63 | 20.28 | 20.8 | 8200 | 60009 | 60009 |
| 8500 | 35.02 | 19.48 | 20.0 | 8266 | 60981 | 60981 |
| 8500 | 38.81 | 17.57 | 18.0 | 8423 | 63514 | 63514 |
| 8500 | 42.30 | 16.13 | 16.6 | 8543 | 65000 | 65000 |
| 8500 | 47.53 | 14.35 | 14.7 | 8690 | 65000 | 65000 |
| 8500 | 50.56 | 13.49 | 13.8 | 8761 | 65000 | 65000 |
| 8500 | 54.64 | 12.48 | 12.8 | 8844 | 65000 | 65000 |
| 8500 | 57.27 | 11.91 | 12.2 | 8891 | 65000 | 65000 |
| 8500 | 60.92 | 11.19 | 11.5 | 8950 | 65000 | 65000 |
| 8500 | 63.47 | 10.75 | 11.0 | 8987 | 65000 | 65000 |
| 8500 | 71.15 | 9.59 | 9.8 | 9083 | 65000 | 65000 |
| 8500 | 77.22 | 8.83 | 9.1 | 9145 | 65000 | 65000 |
| 8500 | 83.89 | 8.13 | 8.3 | 9203 | 65000 | 65000 |
| 8500 | 87.65 | 7.78 | 8.0 | 9232 | 65000 | 65000 |
| 8500 | 93.05 | 7.33 | 7.5 | 9269 | 65000 | 65000 |
| 8500 | 103.12 | 6.61 | 6.8 | 9329 | 65000 | 65000 |
| 8500 | 123.88 | 5.51 | 5.7 | 9420 | 65000 | 65000 |
| 8500 | 134.27 | 5.08 | 5.2 | 9455 | 65000 | 65000 |
| 8500 | 149.26 | 4.57 | 4.7 | 9497 | 65000 | 65000 |
| 8500 | 165.42 | 4.12 | 4.2 | 9534 | 65000 | 65000 |

## IB163

| $Mn_2$ [Nm] | i | $Pn_1$ [kW] | n2 [rpm] | Fr1 [N] | Fr2 D-S-P [N] | Fr2 C [N] |
|---|---|---|---|---|---|---|
| 7225 | 8.89 | 65.20 | 78.7 | 6870 | 60316 | 60316 |
| 8394 | 10.58 | 63.69 | 66.2 | 6950 | 62569 | 62569 |
| 8181 | 11.87 | 55.31 | 59.0 | 7393 | 65940 | 65000 |
| 9350 | 12.81 | 58.57 | 54.6 | 7221 | 65940 | 65000 |
| 10200 | 14.08 | 58.11 | 49.7 | 7245 | 67071 | 65000 |
| 10625 | 15.52 | 54.93 | 45.1 | 7413 | 69097 | 65000 |
| 10519 | 16.39 | 51.51 | 42.7 | 7594 | 70864 | 65000 |

# 5.6 IB/IBA RIDUTTORE - 700 RPM



## IB163

| $Mn_2$ [Nm] | i | $Pn_1$ [kW] | n2 [rpm] | Fr1 [N] | Fr2 D-S-P [N] | Fr2 C [N] |
|---|---|---|---|---|---|---|
| 11050 | 18.02 | 49.21 | 38.9 | 7715 | 72773 | 65000 |
| 11369 | 19.96 | 45.71 | 35.1 | 7901 | 75377 | 65000 |
| 11050 | 21.94 | 40.41 | 31.9 | 8181 | 78965 | 65000 |
| 11156 | 24.17 | 37.03 | 29.0 | 8360 | 80000 | 65000 |
| 11794 | 26.58 | 35.61 | 26.3 | 8435 | 80000 | 65000 |
| 10838 | 28.80 | 30.19 | 24.3 | 8721 | 80000 | 65000 |
| 12219 | 30.92 | 31.71 | 22.6 | 8641 | 80000 | 65000 |
| 12644 | 34.25 | 29.62 | 20.4 | 8752 | 80000 | 65000 |
| 13069 | 37.66 | 27.84 | 18.6 | 8846 | 80000 | 65000 |
| 13494 | 40.65 | 26.63 | 17.2 | 8909 | 80000 | 65000 |
| 12750 | 45.09 | 22.69 | 15.5 | 9118 | 80000 | 65000 |
| 13813 | 51.00 | 21.73 | 13.7 | 9169 | 80000 | 65000 |
| 13813 | 53.63 | 20.67 | 13.1 | 9225 | 80000 | 65000 |
| 13813 | 58.97 | 18.80 | 11.9 | 9324 | 80000 | 65000 |
| 13813 | 69.78 | 15.88 | 10.0 | 9478 | 80000 | 65000 |
| 13813 | 76.72 | 14.45 | 9.1 | 9554 | 80000 | 65000 |
| 13813 | 87.54 | 12.66 | 8.0 | 9648 | 80000 | 65000 |
| 13813 | 96.25 | 11.52 | 7.3 | 9709 | 80000 | 65000 |
| 13813 | 103.93 | 10.66 | 6.7 | 9754 | 80000 | 65000 |
| 13813 | 114.27 | 9.70 | 6.1 | 9805 | 80000 | 65000 |
| 13813 | 126.29 | 8.78 | 5.5 | 9854 | 80000 | 65000 |
| 13813 | 138.85 | 7.98 | 5.0 | 9896 | 80000 | 65000 |
| 13813 | 154.83 | 7.16 | 4.5 | 9939 | 80000 | 65000 |

# 5.7 IB/IBA RIDUTTORE - 500 RPM



## IBA42

| $Mn_2$ [Nm] | i | $Pn_1$ [kW] | n2 [rpm] | Fr1 [N] | Fr2 D-S-P [N] | Fr2 C [N] |
|---|---|---|---|---|---|---|
| 97 | 7.62 | 0.69 | 65.7 | 373 | - | 2557 |
| 97 | 10.62 | 0.49 | 47.1 | 355 | - | 2857 |
| 97 | 12.95 | 0.40 | 38.6 | 406 | - | 3052 |
| 97 | 14.46 | 0.36 | 34.6 | 443 | - | 3166 |
| 129 | 16.47 | 0.42 | 30.4 | 579 | - | 3307 |
| 129 | 22.97 | 0.30 | 21.8 | 355 | - | 3695 |
| 129 | 28.00 | 0.25 | 17.9 | 406 | - | 3946 |
| 129 | 31.27 | 0.22 | 16.0 | 443 | - | 4000 |
| 129 | 33.78 | 0.21 | 14.8 | 458 | - | 4000 |
| 129 | 47.12 | 0.15 | 10.6 | 355 | - | 4000 |
| 129 | 57.43 | 0.12 | 8.7 | 406 | - | 4000 |
| 118 | 64.13 | 0.10 | 7.8 | 406 | - | 4000 |
| 118 | 78.17 | 0.08 | 6.4 | 406 | - | 4000 |

## IBA52

| $Mn_2$ [Nm] | i | $Pn_1$ [kW] | n2 [rpm] | Fr1 [N] | Fr2 D-S-P [N] | Fr2 C [N] |
|---|---|---|---|---|---|---|
| 172 | 7.91 | 1.17 | 63.2 | 373 | - | 2775 |
| 172 | 9.46 | 0.98 | 52.9 | 414 | - | 2945 |
| 172 | 11.57 | 0.80 | 43.2 | 405 | - | 3150 |
| 172 | 14.63 | 0.64 | 34.2 | 392 | - | 3405 |
| 215 | 17.11 | 0.68 | 29.2 | 529 | - | 3588 |
| 215 | 20.46 | 0.57 | 24.4 | 414 | - | 3809 |
| 215 | 25.03 | 0.46 | 20.0 | 405 | - | 4000 |
| 215 | 31.63 | 0.37 | 15.8 | 392 | - | 4000 |
| 215 | 35.10 | 0.33 | 14.2 | 446 | - | 4000 |
| 215 | 41.97 | 0.28 | 11.9 | 414 | - | 4000 |
| 237 | 51.34 | 0.25 | 9.7 | 445 | - | 4000 |
| 215 | 64.87 | 0.18 | 7.7 | 356 | - | 4000 |
| 215 | 79.07 | 0.15 | 6.3 | 406 | - | 4000 |

## IBA53

| $Mn_2$ [Nm] | i | $Pn_1$ [kW] | n2 [rpm] | Fr1 [N] | Fr2 D-S-P [N] | Fr2 C [N] |
|---|---|---|---|---|---|---|
| 237 | 73.70 | 0.18 | 6.8 | 472 | - | 4000 |
| 237 | 93.33 | 0.14 | 5.4 | 472 | - | 4000 |
| 237 | 111.61 | 0.12 | 4.5 | 472 | - | 4000 |
| 237 | 136.53 | 0.10 | 3.7 | 472 | - | 4000 |
| 237 | 172.53 | 0.08 | 2.9 | 472 | - | 4000 |
| 237 | 197.11 | 0.07 | 2.5 | 472 | - | 4000 |

# 5.7 IB/IBA RIDUTTORE - 500 RPM



## IBA53

| $Mn_2$ [Nm] | i | $Pn_1$ [kW] | n2 [rpm] | Fr1 [N] | Fr2 D-S-P [N] | Fr2 C [N] |
|---|---|---|---|---|---|---|
| 237 | 249.08 | 0.05 | 2.0 | 472 | - | 4000 |
| 237 | 271.16 | 0.05 | 1.8 | 472 | - | 4000 |
| 237 | 342.65 | 0.04 | 1.5 | 472 | - | 4000 |

## IBA72

| $Mn_2$ [Nm] | i | $Pn_1$ [kW] | n2 [rpm] | Fr1 [N] | Fr2 D-S-P [N] | Fr2 C [N] |
|---|---|---|---|---|---|---|
| 376 | 8.36 | 2.43 | 59.8 | 664 | 7159 | 3579 |
| 376 | 10.06 | 2.02 | 49.7 | 685 | 7615 | 3808 |
| 376 | 12.44 | 1.63 | 40.2 | 667 | 8174 | 4087 |
| 452 | 14.91 | 1.64 | 33.5 | 826 | 8682 | 4341 |
| 452 | 17.94 | 1.36 | 27.9 | 685 | 9235 | 4618 |
| 452 | 22.19 | 1.10 | 22.5 | 667 | 9913 | 4957 |
| 452 | 27.45 | 0.89 | 18.2 | 667 | 10000 | 5321 |
| 452 | 33.04 | 0.74 | 15.1 | 685 | 10000 | 5500 |
| 430 | 40.87 | 0.57 | 12.2 | 635 | 10000 | 5500 |
| 376 | 45.64 | 0.45 | 10.9 | 646 | 10000 | 5500 |
| 376 | 54.94 | 0.37 | 9.1 | 685 | 10000 | 5500 |
| 376 | 67.96 | 0.30 | 7.4 | 667 | 10000 | 5500 |

## IBA73

| $Mn_2$ [Nm] | i | $Pn_1$ [kW] | n2 [rpm] | Fr1 [N] | Fr2 D-S-P [N] | Fr2 C [N] |
|---|---|---|---|---|---|---|
| 484 | 43.89 | 0.63 | 11.4 | 330 | 10000 | 5500 |
| 484 | 52.83 | 0.52 | 9.5 | 411 | 10000 | 5500 |
| 484 | 65.35 | 0.42 | 7.7 | 400 | 10000 | 5500 |
| 484 | 80.83 | 0.34 | 6.2 | 400 | 10000 | 5500 |
| 484 | 97.29 | 0.28 | 5.1 | 411 | 10000 | 5500 |
| 484 | 120.34 | 0.23 | 4.2 | 400 | 10000 | 5500 |
| 484 | 149.73 | 0.18 | 3.3 | 398 | 10000 | 5500 |
| 484 | 180.23 | 0.15 | 2.8 | 411 | 10000 | 5500 |
| 484 | 222.93 | 0.12 | 2.2 | 400 | 10000 | 5500 |
| 484 | 260.20 | 0.11 | 1.9 | 424 | 10000 | 5500 |
| 484 | 321.85 | 0.09 | 1.6 | 400 | 10000 | 5500 |
| 484 | 357.95 | 0.08 | 1.4 | 445 | 10000 | 5500 |
| 484 | 442.76 | 0.06 | 1.1 | 400 | 10000 | 5500 |

# 5.7 IB/IBA RIDUTTORE - 500 RPM



## IB063

| $Mn_2$ [Nm] | i | $Pn_1$ [kW] | n2 [rpm] | Fr1 [N] | Fr2 D-S-P [N] | Fr2 C [N] |
|---|---|---|---|---|---|---|
| 312 | 5.71 | 3.11 | 87.5 | 248 | 10312 | 2946 |
| 366 | 6.88 | 3.03 | 72.7 | 273 | 10809 | 3088 |
| 376 | 7.32 | 2.93 | 68.3 | 303 | 11020 | 3149 |
| 495 | 9.16 | 3.08 | 54.6 | 258 | 11462 | 3275 |
| 559 | 10.26 | 3.11 | 48.7 | 250 | 11694 | 3341 |
| 581 | 11.03 | 3.00 | 45.3 | 281 | 11938 | 3411 |
| 624 | 12.35 | 2.88 | 40.5 | 319 | 12000 | 3514 |
| 634 | 13.15 | 2.75 | 38.0 | 358 | 12000 | 3590 |
| 634 | 15.18 | 2.38 | 33.0 | 469 | 12000 | 3804 |
| 645 | 17.00 | 2.16 | 29.4 | 535 | 12000 | 3966 |
| 645 | 22.39 | 1.64 | 22.3 | 693 | 12000 | 4423 |
| 645 | 26.09 | 1.41 | 19.2 | 764 | 12000 | 4695 |
| 645 | 28.03 | 1.31 | 17.8 | 793 | 12000 | 4827 |
| 645 | 33.43 | 1.10 | 15.0 | 858 | 12000 | 5166 |
| 645 | 38.58 | 0.95 | 13.0 | 902 | 12000 | 5456 |
| 645 | 43.22 | 0.85 | 11.6 | 933 | 12000 | 5696 |
| 645 | 50.81 | 0.72 | 9.8 | 972 | 12000 | 6054 |
| 645 | 56.93 | 0.65 | 8.8 | 995 | 12000 | 6317 |
| 645 | 69.16 | 0.53 | 7.2 | 1030 | 12000 | 6792 |
| 645 | 77.48 | 0.47 | 6.5 | 1047 | 12000 | 7083 |
| 645 | 90.33 | 0.41 | 5.5 | 1068 | 12000 | 7494 |
| 645 | 101.20 | 0.36 | 4.9 | 1081 | 12000 | 7812 |
| 645 | 111.74 | 0.33 | 4.5 | 1091 | 12000 | 8000 |
| 645 | 124.20 | 0.30 | 4.0 | 1101 | 12000 | 8000 |
| 645 | 139.15 | 0.26 | 3.6 | 1111 | 12000 | 8000 |
| 645 | 157.42 | 0.23 | 3.2 | 1120 | 12000 | 8000 |

## IB083

| $Mn_2$ [Nm] | i | $Pn_1$ [kW] | n2 [rpm] | Fr1 [N] | Fr2 D-S-P [N] | Fr2 C [N] |
|---|---|---|---|---|---|---|
| 538 | 7.81 | 3.93 | 64.0 | 1587 | 17494 | 4998 |
| 645 | 8.62 | 4.27 | 58.0 | 1464 | 17713 | 5061 |
| 699 | 10.49 | 3.80 | 47.6 | 1633 | 18000 | 5387 |
| 806 | 11.59 | 3.97 | 43.1 | 1571 | 18000 | 5469 |
| 871 | 14.43 | 3.44 | 34.6 | 1761 | 18000 | 5875 |
| 914 | 16.60 | 3.14 | 30.1 | 1869 | 18000 | 6150 |
| 914 | 18.32 | 2.84 | 27.3 | 1976 | 18000 | 6390 |
| 914 | 22.82 | 2.28 | 21.9 | 2177 | 18000 | 6949 |
| 914 | 26.71 | 1.95 | 18.7 | 2297 | 18000 | 7376 |
| 914 | 29.50 | 1.77 | 16.9 | 2364 | 18000 | 7657 |
| 914 | 31.80 | 1.64 | 15.7 | 2410 | 18000 | 7875 |

# 5.7 IB/IBA RIDUTTORE - 500 RPM



## IB083

| $Mn_2$ [Nm] | i | $Pn_1$ [kW] | n2 [rpm] | Fr1 [N] | Fr2 D-S-P [N] | Fr2 C [N] |
|---|---|---|---|---|---|---|
| 914 | 34.49 | 1.51 | 14.5 | 2456 | 18000 | 8118 |
| 914 | 39.60 | 1.32 | 12.6 | 2500 | 18000 | 8546 |
| 914 | 42.95 | 1.21 | 11.6 | 2500 | 18000 | 8807 |
| 914 | 45.44 | 1.15 | 11.0 | 2500 | 18000 | 8992 |
| 914 | 51.19 | 1.02 | 9.8 | 2500 | 18000 | 9395 |
| 914 | 55.52 | 0.94 | 9.0 | 2500 | 18000 | 9679 |
| 914 | 59.96 | 0.87 | 8.3 | 2500 | 18000 | 9955 |
| 914 | 63.74 | 0.82 | 7.8 | 2500 | 18000 | 10179 |
| 914 | 69.14 | 0.75 | 7.2 | 2500 | 18000 | 10485 |
| 914 | 73.14 | 0.71 | 6.8 | 2500 | 18000 | 10701 |
| 914 | 80.76 | 0.65 | 6.2 | 2500 | 18000 | 11092 |
| 914 | 92.19 | 0.57 | 5.4 | 2500 | 18000 | 11634 |
| 914 | 100.57 | 0.52 | 5.0 | 2500 | 18000 | 12000 |
| 914 | 105.29 | 0.49 | 4.8 | 2500 | 18000 | 12000 |
| 914 | 116.25 | 0.45 | 4.3 | 2500 | 18000 | 12000 |
| 914 | 126.76 | 0.41 | 3.9 | 2500 | 18000 | 12000 |
| 914 | 144.77 | 0.36 | 3.5 | 2500 | 18000 | 12000 |

## IB103

| $Mn_2$ [Nm] | i | $Pn_1$ [kW] | n2 [rpm] | Fr1 [N] | Fr2 D-S-P [N] | Fr2 C [N] |
|---|---|---|---|---|---|---|
| 860 | 8.13 | 6.04 | 61.5 | 935 | 21643 | 6184 |
| 968 | 8.97 | 6.15 | 55.8 | 895 | 22000 | 6323 |
| 1075 | 10.92 | 5.61 | 45.8 | 1078 | 22000 | 6713 |
| 1075 | 12.05 | 5.09 | 41.5 | 1256 | 22000 | 6963 |
| 1290 | 14.99 | 4.91 | 33.4 | 1317 | 22000 | 7372 |
| 1505 | 17.27 | 4.97 | 28.9 | 1296 | 22000 | 7600 |
| 1505 | 19.06 | 4.50 | 26.2 | 1454 | 22000 | 7891 |
| 1505 | 23.70 | 3.62 | 21.1 | 1753 | 22000 | 8572 |
| 1613 | 26.51 | 3.47 | 18.9 | 1805 | 22000 | 8854 |
| 1720 | 30.55 | 3.21 | 16.4 | 1893 | 22000 | 9254 |
| 1828 | 33.07 | 3.15 | 15.1 | 1912 | 22000 | 9447 |
| 1828 | 35.87 | 2.91 | 13.9 | 1996 | 22000 | 9745 |
| 1828 | 41.12 | 2.53 | 12.2 | 2122 | 22000 | 10264 |
| 1828 | 44.61 | 2.34 | 11.2 | 2189 | 22000 | 10584 |
| 1828 | 47.28 | 2.20 | 10.6 | 2234 | 22000 | 10819 |
| 1828 | 50.24 | 2.07 | 9.9 | 2278 | 22000 | 11068 |
| 1828 | 53.02 | 1.97 | 9.4 | 2315 | 22000 | 11293 |
| 1828 | 58.50 | 1.78 | 8.6 | 2377 | 22000 | 11715 |
| 1828 | 64.89 | 1.61 | 7.7 | 2436 | 22000 | 12175 |
| 1828 | 68.58 | 1.52 | 7.3 | 2466 | 22000 | 12427 |

# 5.7 IB/IBA RIDUTTORE - 500 RPM



## IB103

| $Mn_2$ [Nm] | i | $Pn_1$ [kW] | n2 [rpm] | Fr1 [N] | Fr2 D-S-P [N] | Fr2 C [N] |
|---|---|---|---|---|---|---|
| 1828 | 72.76 | 1.43 | 6.9 | 2495 | 22000 | 12701 |
| 1828 | 78.92 | 1.32 | 6.3 | 2533 | 22000 | 13088 |
| 1935 | 83.66 | 1.32 | 6.0 | 2534 | 22000 | 13283 |
| 1935 | 92.31 | 1.20 | 5.4 | 2576 | 22000 | 13773 |
| 1935 | 105.44 | 1.05 | 4.7 | 2626 | 22000 | 14463 |
| 1935 | 114.80 | 0.96 | 4.4 | 2655 | 22000 | 14920 |
| 1935 | 120.42 | 0.92 | 4.2 | 2670 | 22000 | 15000 |
| 1935 | 132.87 | 0.83 | 3.8 | 2699 | 22000 | 15000 |
| 1935 | 144.69 | 0.76 | 3.5 | 2722 | 22000 | 15000 |
| 1935 | 165.25 | 0.67 | 3.0 | 2754 | 22000 | 15000 |

## IB123

| $Mn_2$ [Nm] | i | $Pn_1$ [kW] | n2 [rpm] | Fr1 [N] | Fr2 D-S-P [N] | Fr2 C [N] |
|---|---|---|---|---|---|---|
| 1613 | 7.97 | 11.54 | 62.8 | 2453 | 26584 | 7595 |
| 1935 | 9.62 | 11.47 | 52.0 | 2462 | 27285 | 7796 |
| 2150 | 10.33 | 11.87 | 48.4 | 2410 | 27163 | 7761 |
| 2150 | 12.48 | 9.83 | 40.1 | 2683 | 29542 | 8441 |
| 2258 | 13.84 | 9.30 | 36.1 | 2754 | 30000 | 8692 |
| 2258 | 15.38 | 8.37 | 32.5 | 2878 | 30000 | 9104 |
| 2365 | 18.58 | 7.26 | 26.9 | 3027 | 30000 | 9738 |
| 2688 | 20.61 | 7.44 | 24.3 | 3004 | 30000 | 9762 |
| 3010 | 22.78 | 7.54 | 21.9 | 2990 | 30000 | 9786 |
| 3010 | 25.89 | 6.63 | 19.3 | 3112 | 30000 | 10378 |
| 3010 | 27.51 | 6.24 | 18.2 | 3164 | 30000 | 10668 |
| 3010 | 30.79 | 5.57 | 16.2 | 3253 | 30000 | 11223 |
| 3010 | 31.26 | 5.49 | 16.0 | 3265 | 30000 | 11299 |
| 3010 | 34.68 | 4.95 | 14.4 | 3337 | 30000 | 11830 |
| 3010 | 40.53 | 4.24 | 12.3 | 3433 | 30000 | 12663 |
| 3225 | 44.89 | 4.10 | 11.1 | 3452 | 30000 | 12950 |
| 3440 | 49.80 | 3.94 | 10.0 | 3473 | 30000 | 13267 |
| 3440 | 54.30 | 3.61 | 9.2 | 3517 | 30000 | 13782 |
| 3440 | 59.36 | 3.31 | 8.4 | 3558 | 30000 | 14327 |
| 3548 | 62.59 | 3.23 | 8.0 | 3568 | 30000 | 14518 |
| 3548 | 69.43 | 2.91 | 7.2 | 3610 | 30000 | 15187 |
| 3763 | 74.42 | 2.88 | 6.7 | 3614 | 30000 | 15364 |
| 3763 | 80.04 | 2.68 | 6.2 | 3642 | 30000 | 15858 |
| 3763 | 89.87 | 2.39 | 5.6 | 3681 | 30000 | 16668 |
| 3763 | 99.70 | 2.15 | 5.0 | 3712 | 30000 | 17421 |
| 3763 | 106.65 | 2.01 | 4.7 | 3731 | 30000 | 17925 |
| 3763 | 119.60 | 1.79 | 4.2 | 3761 | 30000 | 18805 |

# 5.7 IB/IBA RIDUTTORE - 500 RPM



## IB123

| $Mn_2$ [Nm] | i | $Pn_1$ [kW] | n2 [rpm] | Fr1 [N] | Fr2 D-S-P [N] | Fr2 C [N] |
|---|---|---|---|---|---|---|
| 3763 | 129.96 | 1.65 | 3.9 | 3780 | 30000 | 19466 |
| 3763 | 144.43 | 1.49 | 3.5 | 3802 | 30000 | 20000 |
| 3763 | 160.23 | 1.34 | 3.1 | 3822 | 30000 | 20000 |
| 3763 | 180.40 | 1.19 | 2.8 | 3842 | 30000 | 20000 |

## IB143

| $Mn_2$ [Nm] | i | $Pn_1$ [kW] | n2 [rpm] | Fr1 [N] | Fr2 D-S-P [N] | Fr2 C [N] |
|---|---|---|---|---|---|---|
| 3225 | 10.84 | 16.97 | 46.1 | 2171 | 24968 | 24968 |
| 3333 | 11.87 | 16.02 | 42.1 | 2274 | 25696 | 25696 |
| 3333 | 14.49 | 13.12 | 34.5 | 2587 | 28165 | 28165 |
| 3440 | 17.04 | 11.51 | 29.3 | 2760 | 29959 | 29959 |
| 3870 | 18.66 | 11.83 | 26.8 | 2726 | 29831 | 29831 |
| 4300 | 21.00 | 11.68 | 23.8 | 2742 | 30135 | 30135 |
| 4730 | 22.77 | 11.85 | 22.0 | 2724 | 29954 | 29954 |
| 4945 | 25.63 | 11.00 | 19.5 | 2815 | 31059 | 31059 |
| 4945 | 27.44 | 10.28 | 18.2 | 2894 | 32128 | 32128 |
| 5053 | 30.05 | 9.59 | 16.6 | 2968 | 33240 | 33240 |
| 5053 | 33.01 | 8.73 | 15.2 | 3060 | 34796 | 34796 |
| 5160 | 36.67 | 8.02 | 13.6 | 3137 | 36252 | 36252 |
| 5160 | 40.29 | 7.30 | 12.4 | 3214 | 37914 | 37914 |
| 5160 | 44.16 | 6.66 | 11.3 | 3283 | 39586 | 39586 |
| 5375 | 48.35 | 6.34 | 10.3 | 3318 | 40000 | 40000 |
| 5375 | 53.16 | 5.77 | 9.4 | 3380 | 40000 | 40000 |
| 5375 | 54.63 | 5.61 | 9.2 | 3397 | 40000 | 40000 |
| 5375 | 59.02 | 5.19 | 8.5 | 3442 | 40000 | 40000 |
| 5375 | 64.88 | 4.72 | 7.7 | 3493 | 40000 | 40000 |
| 5375 | 70.43 | 4.35 | 7.1 | 3533 | 40000 | 40000 |
| 5375 | 77.12 | 3.98 | 6.5 | 3573 | 40000 | 40000 |
| 5375 | 85.54 | 3.58 | 5.8 | 3616 | 40000 | 40000 |
| 5375 | 94.13 | 3.26 | 5.3 | 3651 | 40000 | 40000 |
| 5375 | 105.83 | 2.90 | 4.7 | 3690 | 40000 | 40000 |
| 5375 | 111.94 | 2.74 | 4.5 | 3707 | 40000 | 40000 |
| 5375 | 124.62 | 2.46 | 4.0 | 3737 | 40000 | 40000 |
| 5375 | 136.44 | 2.25 | 3.7 | 3760 | 40000 | 40000 |
| 5375 | 149.59 | 2.05 | 3.3 | 3781 | 40000 | 40000 |
| 5375 | 166.53 | 1.84 | 3.0 | 3804 | 40000 | 40000 |
| 5375 | 187.24 | 1.64 | 2.7 | 3826 | 40000 | 40000 |

# 5.7 IB/IBA RIDUTTORE - 500 RPM



## IB153

| $Mn_2$ [Nm] | i | $Pn_1$ [kW] | n2 [rpm] | Fr1 [N] | Fr2 D-S-P [N] | Fr2 C [N] |
|---|---|---|---|---|---|---|
| 4838 | 10.49 | 26.30 | 47.6 | 6819 | 48046 | 48046 |
| 4838 | 12.64 | 21.82 | 39.5 | 7339 | 51544 | 51544 |
| 5375 | 14.01 | 21.88 | 35.7 | 7332 | 52779 | 52779 |
| 5375 | 15.40 | 19.91 | 32.5 | 7561 | 54701 | 54701 |
| 6450 | 18.56 | 19.83 | 26.9 | 7571 | 57095 | 57095 |
| 6988 | 20.56 | 19.38 | 24.3 | 7623 | 58602 | 58602 |
| 7203 | 23.86 | 17.22 | 21.0 | 7874 | 61748 | 61748 |
| 7310 | 25.19 | 16.55 | 19.9 | 7951 | 62895 | 62895 |
| 8600 | 28.23 | 17.37 | 17.7 | 7856 | 63827 | 63827 |
| 8600 | 30.35 | 16.16 | 16.5 | 7997 | 65000 | 65000 |
| 8600 | 33.63 | 14.58 | 14.9 | 8180 | 65000 | 65000 |
| 8600 | 35.02 | 14.01 | 14.3 | 8247 | 65000 | 65000 |
| 8600 | 38.81 | 12.64 | 12.9 | 8406 | 65000 | 65000 |
| 8600 | 42.30 | 11.60 | 11.8 | 8527 | 65000 | 65000 |
| 8600 | 47.53 | 10.32 | 10.5 | 8676 | 65000 | 65000 |
| 8600 | 50.56 | 9.70 | 9.9 | 8748 | 65000 | 65000 |
| 8600 | 54.64 | 8.98 | 9.2 | 8832 | 65000 | 65000 |
| 8600 | 57.27 | 8.56 | 8.7 | 8880 | 65000 | 65000 |
| 8600 | 60.92 | 8.05 | 8.2 | 8939 | 65000 | 65000 |
| 8600 | 63.47 | 7.73 | 7.9 | 8977 | 65000 | 65000 |
| 8600 | 71.15 | 6.89 | 7.0 | 9074 | 65000 | 65000 |
| 8600 | 77.22 | 6.35 | 6.5 | 9137 | 65000 | 65000 |
| 8600 | 83.89 | 5.85 | 6.0 | 9195 | 65000 | 65000 |
| 8600 | 87.65 | 5.60 | 5.7 | 9225 | 65000 | 65000 |
| 8600 | 93.05 | 5.27 | 5.4 | 9262 | 65000 | 65000 |
| 8600 | 103.12 | 4.76 | 4.8 | 9322 | 65000 | 65000 |
| 8600 | 123.88 | 3.96 | 4.0 | 9415 | 65000 | 65000 |
| 8600 | 134.27 | 3.65 | 3.7 | 9450 | 65000 | 65000 |
| 8600 | 149.26 | 3.29 | 3.4 | 9493 | 65000 | 65000 |
| 8600 | 165.42 | 2.97 | 3.0 | 9530 | 65000 | 65000 |

## IB163

| $Mn_2$ [Nm] | i | $Pn_1$ [kW] | n2 [rpm] | Fr1 [N] | Fr2 D-S-P [N] | Fr2 C [N] |
|---|---|---|---|---|---|---|
| 7310 | 8.89 | 46.89 | 56.2 | 6830 | 68733 | 65000 |
| 8493 | 10.58 | 45.80 | 47.3 | 6910 | 71467 | 65000 |
| 8278 | 11.87 | 39.77 | 42.1 | 7359 | 75194 | 65000 |
| 9460 | 12.81 | 42.12 | 39.0 | 7184 | 75410 | 65000 |
| 10320 | 14.08 | 41.79 | 35.5 | 7209 | 76831 | 65000 |
| 10750 | 15.52 | 39.50 | 32.2 | 7379 | 79173 | 65000 |
| 10643 | 16.39 | 37.04 | 30.5 | 7562 | 80000 | 65000 |

# 5.7 IB/IBA RIDUTTORE - 500 RPM



## IB163

| $Mn_2$ [Nm] | i | $Pn_1$ [kW] | n2 [rpm] | Fr1 [N] | Fr2 D-S-P [N] | Fr2 C [N] |
|---|---|---|---|---|---|---|
| 11180 | 18.02 | 35.39 | 27.8 | 7685 | 80000 | 65000 |
| 11503 | 19.96 | 32.87 | 25.1 | 7872 | 80000 | 65000 |
| 11180 | 21.94 | 29.06 | 22.8 | 8156 | 80000 | 65000 |
| 11288 | 24.17 | 26.63 | 20.7 | 8337 | 80000 | 65000 |
| 11933 | 26.58 | 25.61 | 18.8 | 8413 | 80000 | 65000 |
| 10965 | 28.80 | 21.71 | 17.4 | 8702 | 80000 | 65000 |
| 12363 | 30.92 | 22.80 | 16.2 | 8622 | 80000 | 65000 |
| 12793 | 34.25 | 21.30 | 14.6 | 8733 | 80000 | 65000 |
| 13223 | 37.66 | 20.02 | 13.3 | 8828 | 80000 | 65000 |
| 13653 | 40.65 | 19.15 | 12.3 | 8893 | 80000 | 65000 |
| 12900 | 45.09 | 16.32 | 11.1 | 9104 | 80000 | 65000 |
| 13975 | 51.00 | 15.63 | 9.8 | 9155 | 80000 | 65000 |
| 13975 | 53.63 | 14.86 | 9.3 | 9212 | 80000 | 65000 |
| 13975 | 58.97 | 13.52 | 8.5 | 9312 | 80000 | 65000 |
| 13975 | 69.78 | 11.42 | 7.2 | 9468 | 80000 | 65000 |
| 13975 | 76.72 | 10.39 | 6.5 | 9545 | 80000 | 65000 |
| 13975 | 87.54 | 9.11 | 5.7 | 9641 | 80000 | 65000 |
| 13975 | 96.25 | 8.28 | 5.2 | 9702 | 80000 | 65000 |
| 13975 | 103.93 | 7.67 | 4.8 | 9747 | 80000 | 65000 |
| 13975 | 114.27 | 6.97 | 4.4 | 9799 | 80000 | 65000 |
| 13975 | 126.29 | 6.31 | 4.0 | 9848 | 80000 | 65000 |
| 13975 | 138.85 | 5.74 | 3.6 | 9891 | 80000 | 65000 |
| 13975 | 154.83 | 5.15 | 3.2 | 9935 | 80000 | 65000 |

# 6.1 CONDIZIONI DI VENDITA

Tutte le forniture effettuate da Motovario Group si intendono regolate esclusivamente dalle condizioni generali di vendita disponibili sul nostro sito:

**http://www.motovario.com/ita/corporate/condizioni-di-vendita**