TECHNICAL CATALOGUE

B SERIES

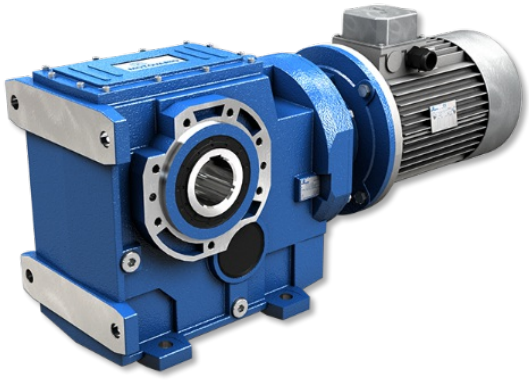

HELICAL**BEVEL** GEARED**MOTORS**

STANDARD **IEC**

DIRECTIVE **ATEX** Ex

MOTOVARIO®

HEART OF MOTION

a TECO Group company

INDEX

1. GENERAL INFORMATION

1.1 ATEX 5

1.2 SYMBOLS AND FORMULAS 6

1.2.1 Symbols 6

1.2.2 Formulas 7

1.3 PRODUCT SELECTION 8

1.4 SERVICE FACTOR 9

1.5 INSTALLATION 10

2. PRODUCT INFORMATION

2.1 DESIGN FEATURES 11

2.2 TYPOLOGY 12

2.2.1 Designation 12

2.2.2 Versions 13

2.2.3 Modularity 17

2.3 MOUNTING POSITIONS 19

2.3.1 Mounting positions 19

2.3.2 Position of terminal box 19

2.4 THERMAL POWER 20

2.4.1 Information 20

2.4.2 Verification 20

2.5 DIRECTION OF ROTATION 21

2.6 CRITICAL APPLICATIONS 22

2.6.1 Critical applications 22

2.6.2 Information 22

2.7 MOTOR FLANGE AVAILABILITY 23

2.7.1 BA Motor flange availability 23

2.7.2 B Motor flange availability 24

2.8 OUTPUT SHAFT BEARINGS 27

2.9 OVERHUNG LOAD 28

2.9.1 Information 28

2.9.2 Input 28

2.9.3 Output 29

INDEX

2.10 LUBRICATION **30**
2.10.1 Information **30**
2.10.2 Lubricants **30**
2.10.3 Special lubricants **31**
2.10.4 Quantity **32**
2.11 MOMENTS OF INERTIA **33**

3. DIMENSIONS

3.1 REDUCERS/GEARED MOTORS **34**
3.1.1 BA.2 ..... **34**
3.1.2 BA.3 ..... **35**
3.1.3 CBA.2 ..... **36**
3.1.4 CBA.3 ..... **37**
3.1.5 IBA.2 ..... **38**
3.1.6 IBA.3 ..... **39**
3.1.7 B **40**
3.1.8 CB **42**
3.1.9 IB **44**
3.2 ELECTRIC MOTORS **46**
3.2.1 Electric motors **46**
3.2.2 Standard high efficiency (TS), high (TH) and premium (TP) motors **48**
3.2.3 Nominal power - [kW] **49**
3.3 WEIGHT **50**
3.4 END SHAFT **51**

4. ACCESSORIES AND OPTIONS

4.1 LOW SPEED SHAFTS **52**
4.2 OUTPUT FLANGE **53**
4.2.1 BA **53**
4.2.2 B **54**
4.3 SHAFT MOUNTING FASTENING **55**
4.3.1 Torque arm: BA Mounting position **55**
4.3.2 Torque arm: BA Dimensions **55**
4.3.3 Torque arm: B Mounting position **56**
4.3.4 Torque arm: B063-083-103-123 Dimensions **57**

4.3.5 Torque arm: B143-153-163 Dimensions 57

4.4 BACKSTOP DEVICE 58

4.5 OUTPUT SHAFT WITH SHRINK DISC 59

4.6 REINFORCED OIL SEALS FOR OUTPUT SHAFT 60

4.7 ASSEMBLING/DISASSEMBLING KIT 61

5. PERFORMANCES

5.1 B/BA GEARED MOTORS (50Hz) 62

5.2 IB/IBA GEAR REDUCER - 1750 RPM 140

5.3 IB/IBA GEAR REDUCER - 1400 RPM 147

5.4 IB/IBA GEAR REDUCER - 1140 RPM 154

5.5 IB/IBA GEAR REDUCER - 900 RPM 161

5.6 IB/IBA GEAR REDUCER - 700 RPM 168

5.7 IB/IBA GEAR REDUCER - 500 RPM 175

6. SALES CONDITIONS

6.1 SALES CONDITIONS 182

1.1 ATEX

ATEX Certification

The gear reducers described in this catalogue, defined as “ATEX”, were designed and manufactured in compliance with: Directive **ATEX 2014/34/UE.**
If used by following the instructions set forth in the INSTALLATION AND USE INSTRUCTIONS Atex Manual (provided as an attachment to the supplied products), ATEX MOTOVARIO gear reducers can be used in one of the following environments:

Group II
Category 2G and 2D
Zone 1/21 for gases and dusts (gas group IIB) with the following protection methods:
Protection against ignition:
EN13463-5 (c) constructional safety
EN13463-8 (k) liquid immersion

Group II
Category 3G and 3D
Zone 2/22 for gases and dusts
Protection against ignition:
EN13463-5 (c) constructional safety

The room temperature envisaged for the application must range between -20 and + 40 °C (*).
The products certified for use in Zone 1/21 can be used also in Zone 2/22. To identify the environment inside which the Atex certification of the special gear reducer is limited, refer to Atex Performance Tables.

The classified units are manufactured and marked to comply with the provisions of Directive **ATEX 2014/34/UE**.

UNINTENDED USE
It is strictly forbidden to use the gear reducer:

- inside an area with equipment category I (mines likely to become endangered by firedamp);
- inside an Area classified as more severe than specified on product label;
- at a room temperature not falling within the specified limits (*);
- under conditions (P1, n1, M2) that, even individually, exceed the values specified inside Atex Performance Tables.

1.2 SYMBOLS AND FORMULAS

1.2.1 Symbols

Physical dimension	Symbol	Symbol units of measure	Input	Output
Power	P	[kW]	P_1	P_2
Requested power	Pr	[kW]	Pr_1	Pr_2
Nominal power	Pn	[kW]	Pn_1	Pn_2
Torque	M	[Nm]	M_1	M_2
Nominal torque	Mn	[Nm]		Mn_2
Requested torque	Mr	[Nm]	Mr_1	Mr_2
Speed	n	[rpm]	n_1	n_2
Force	F	[N]		
Radial load	Fr	[N]	Fr_1	Fr_2
Axial load	Fa	[N]	Fa_1	Fa_2
Reduction ratio	i			
Dynamic efficiency	η_d			
Service factor	f.s.			
Static	s			
Dynamic	d			
Calculated	c			
Maximum	max			
Minimum	min			
Moment of inertia	J	[kgm^2]	J_1	
Ambient temperature	T_{amb}	[°C]		
Dimension		[mm]		

1.2 SYMBOLS AND FORMULAS

1.2.2 Formulas

REDUCER		
Starting or stopping time	$t= v / a$	[s]
Velocity in rotary motion	$v= \pi * d * n / 60$ $v= \omega * r$	[m/s]
Speed velocity Angular velocity	$n= 60 * v / (\pi * d)$ $\omega= v / r$	[rpm] [rad/s]
Acceleration or deceleration according to a starting / stopping time	$a= v / t$	[m/s^2]
Angular acceleration	$\alpha= n / (9{,}55 * t)$ $\alpha= \omega / t$	[rad/s^2]
Starting or stopping distance (according to acceleration / deceleration or angular velocity)	$s= a * t^2 / 2$ $s= v * t / 2$	[m]
Horizontal translation force	$F= \mu * m * g$	[N]
Vertical translation force (lifting)	$F= m * g$	
Inclined plane translation force	$F= m * g (\mu * \cos\beta + \mathrm{sen}\beta)$	
m= mass [kg]; g= gravity acceleration [m/s^2]; μ= friction coefficent; β= angle of inclination		
Moment of inertia	$J= m * v^2 / \omega^2$	[kgm^2]
Torque	$M= F * d / 2$ $M= J * \omega / t$	[Nm]

MOTOR and GEARMOTOR		
Starting time	$ta= (Jext+Jm)*n_n/9{,}55+(M_{peak}-Mr)$	[s]
Braking time	$ts= (Jext+Jm)*n_n/9{,}55+(M_{peak}+Mr)$	[s]
Motor rotation angle during starting	$\varphi= n_n * ta / 19{,}1$	[rad]
Motor rotation angle during braking	$\varphi= n_n * ts / 19{,}1$	[rad]
Power available at the shaft of single phase motor	$P= V * I * \eta * \cos\omega$	[W]
Power available at the shaft of three phase motor	$P= 1{,}73 * V * I * \eta * \cos\omega$	[W]

RUNNING at 60Hz		
Speed velocity at 60Hz	$n_{60Hz}= 1{,}2 * n_{50Hz}$	[rpm]
Power at 60Hz	$P1_{60Hz}= P1_{50Hz} * V_{60Hz}/V_{50Hz}$	[kW]
If input voltage at 60 Hz (V_{60Hz}) corresponds to winding voltage at 50 Hz (V_{50Hz}), power doesn't change $P1_{60Hz}= P1_{50Hz}$ If input voltage at 60 Hz (V_{60Hz}) is 20% higher than winding voltage at 50 Hz (V_{50Hz}), power increases by 20% $P1_{60Hz}= 1{,}2\ P1_{50Hz}$		
Torque at 60Hz	$M_{60hz}= M_{50Hz} * P1_{60Hz} / (1{,}2 * P1_{50Hz})$	[Nm]
Service factor at 60Hz	$f.s._{60Hz}= f.s._{50Hz} * 1{,}175 * P1_{50Hz} / P1_{60Hz}$	-

1.3 PRODUCT SELECTION

For correctly selecting a gear reducer or geared motor, several essential pieces of data are required:

1. The rotational input speed to the gear reducer **(n_1)** and the rotational output speed **(n_2).** Through these two values it is possible to calculate the reduction ratio **(i)** of the gear reducer using the following formula: **$i=n_1/n_2$**
2. The torque required by the application **(Mr_2)**.

The geared motor or gear reducer can be selected once this data is known.
This guide helps you to select the right product in just a few steps:

Geared motor selection

1. Determine the application's actual service factor **(s.f.)**. This parameter depends on the type of load of the powered machine, the number of starts per hour and the hours of operation (refer to the "Service factor" paragraph).
2. Calculate the input power **Pr_1** using the required torque value **Mr_2**, the speed **n_2** and dynamic efficiency value. **$Pr1=(Mr_2*n_2)/(9550*\eta_d)$.** The dynamic efficiency value depends on the type of gear reducer and on the number of gear reduction stages. (To calculate the efficiency value see its page).
3. Consult the geared motor performance tables and identify a normalised power value **Pn_1** exceeding the required power **Pr_1**, such that: **$Pn_1 \geq Pr_1$**
4. Once the suitable nominal power has been identified, select the geared motor capable of generating the rotational speed closest to the desired n_2 value and with service factor s.f. greater or equal to that required by the application.

For Atex product selection, use the service factor "f.s. Atex".

In the geared motor selection tables the combinations include 2-pole, 4-pole and 6-pole motors powered at 50Hz.

Gear reducer selection

1. Determine the application's service factor **(s.f.)** (consult to the "Service factor" paragraph on its page) .
2. Calculate the reduction ratio i from the requested output speed **n_2** and from the input speed **n1. $i=n_1/n_2$**
3. Calculate the torque **Mc_2** for selecting the gear reducer through the torque required by the application **Mr_2** and the service factor s.f.: **$Mc_2=Mr_2*(f.s.)$**
4. Consult the Gear Reducer Performance tables looking for the reducer that, with the reduction ratio closer to the calculated one, has a nominal torque **Mn_2** so that: **$Mn_2 \geq Mc_2$**

For Atex product Selection, refer to Atex Gear Reducer Performance tables.

Checks

Once the gear reducer or geared motor has been selected, the following checks should be performed:

A. **Thermal power**

The gear reducer's thermal power must be equal to or greater than the installed mechanical power, or the power required by the application according to the indications contained in the section (refer to the "Thermal power" paragraph).

B. **Maximum torque**

Generally, the maximum torque (peak instantaneous load) that can be applied to the gear reducer must not exceed 200% of the nominal torque **Mn_2** (ATEX - M_2max).

C. **Radial loads**

1. Verify that the radial loads acting on the input and/or output shafts are within with the values indicated in the catalogue. If they exceed these values, increase the size of the gear reducer or modify the external load capacity. During the checking phase, it is important to remember that the values indicated in the catalogue refer to loads acting on the mid-point of the shaft protrusion, therefore, if the load is applied to a different position, appropriate formulas must be used to calculate the admissible load in the desired position (refer to the "Radial loads" paragraph).
2. If accessory output shafts are present, make sure that the applied load is compatible with shaft size. If help is needed: contact MOTOVARIO TECHNICAL SERVICE.

D. If an electric motor is going to be fitted to the selected gear reducer, check for its applicability by referring to the configuration table (see paragraph "Configurations"). From IEC 180 motors, verify if necessary to support the motor with feet. In case of need please contact MOTOVARIO TECHNICAL SERVICE.

(Atex version, only) Consult catalogue to make sure that Version, Mounting and Accessories meet Atex certification requirements.

1.4 SERVICE FACTOR

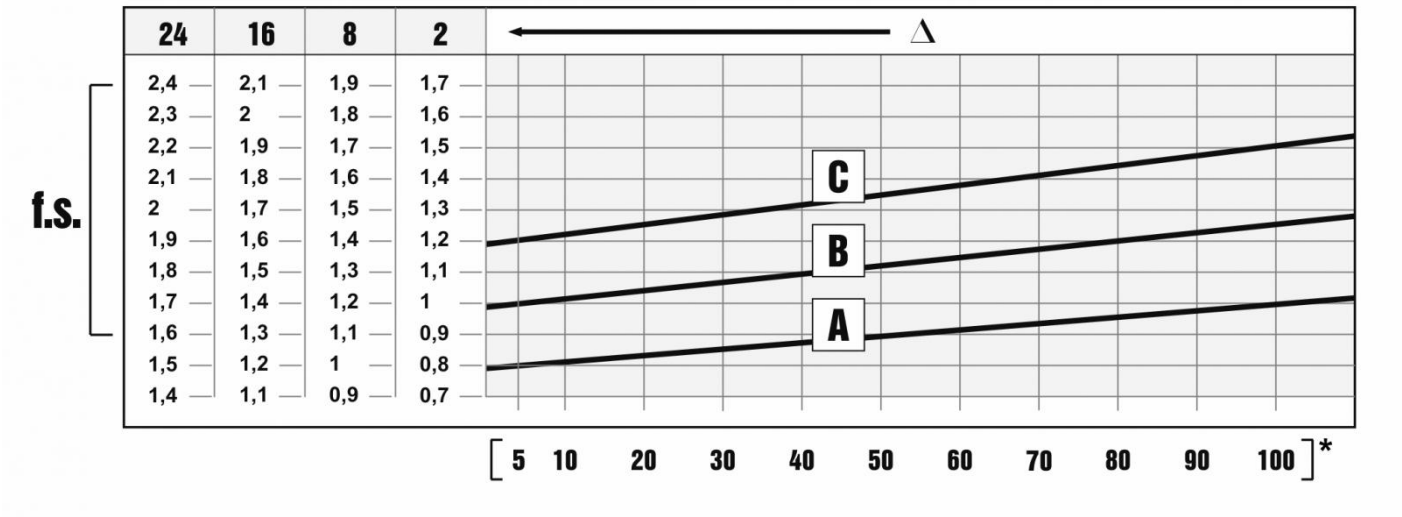

The service factor (f.s.) depends on the operating conditions the gear reducer is subjected to.
The parameters that need to be taken into consideration to select the most adequate service factor correctly comprise:

- type of load of the operated machine : A - B - C
- length of daily operating time: hours/day (Δ)
- start-up frequency: starts/hour (*)

LOAD:

- **A** - uniform = fa ≤ 0,3
- **B** - moderate shocks = fa ≤ 3
- **C** - heavy shocks = fa ≤ 10

fa = Je/Jm

- Je [kgm^2] moment of reduced external inertia at the drive-shaft
- Jm [kgm^2] moment of inertia of motor

If fa > 10 call our Technical Service.

A. Screw feeders for light materials, fans, assembly lines, conveyor belts for light materials, small mixers, lifts, cleaning machines, fillers, control machines.
B. Winding devices, woodworking machine feeders, goods lifts, balancers, threading machines, medium mixers, conveyor belts for heavy materials, winches, sliding doors, fertilizer scrapers, packing machines, concrete mixers, crane mechanisms, milling cutters, folding machines, gear pumps.
C. Mixers for heavy materials, shears, presses, centrifuges, rotating supports, winches and lifts for heavy materials, grinding lathes, stone mills, bucket elevators, drilling machines, hammer mills, cam presses, folding machines, turntables, tumbling barrels, vibrators, shredders.

1.5 INSTALLATION

To install the gear reducer it is necessary to note the following recommendations:

- Check the correct direction of rotation of the gear reducer output shaft before fitting the unit to the machine.
- In the case of particularly lengthy periods of storage (4/6 months), if the oil seal is not immersed in the lubricant inside the unit, it is recommended to change it since the rubber could stick to the shaft or may even have lost the elasticity it needs to function properly.
- Whenever possible, protect the gear reducer against solar radiation and bad weather.
- Ensure the motor cools correctly by ensuring good passage of air from the fan side.
- In the case of ambient temperatures < -5°C or > +40°C call the Technical Service.
- The various parts (pulleys, gear wheels, couplings, shafts, etc.) must be mounted on the shafts using special threaded holes or other systems that anyhow ensure correct operation without risking damage to the bearings or external parts of the units. Lubricate the surfaces in contact to avoid seizure or oxidation.
- Painting must definitely not go over rubber parts and the holes on the breather plugs, if any.
- For units equipped with oil plugs, replace the closed plug used for shipping with the special breather plug.
- Check the correct level of the lubricant through the indicator, if there is one.
- Starting must take place gradually, without immediately applying the maximum load.
- When there are parts, objects or materials under the motor drive that can be damaged by even limited spillage of oil, special protection should be fitted.

Assembling motor on pam flange
When the unit is supplied without motor, it is necessary to follow these recommendation to ensure the correct assembly of the electric motor. Check that the tolerances for the motor shaft and flange correspond to the “standard”. Carefully clean the shaft, spigot and surfaces of the flange removing traces of paint and dirt, and confirm the key is fitted correctly. Fit the half coupling/sleeve to the motor shaft (see picture) taking care to ensure the motor shaft and bearings are not damaged by avoiding excessive force and where necessary using assembly equipment.Place the couplings elastic element onto the motor half coupling and position the motor up to the gear unit ensuring the coupling element is aligned with the driven half coupling. Complete the assembly using the fixing bolts. Key-ways with tightened tolerances.

In case of Atex units, fit gasket (to be requested to Motovario) between PAM flange and motor.

Flexible joint

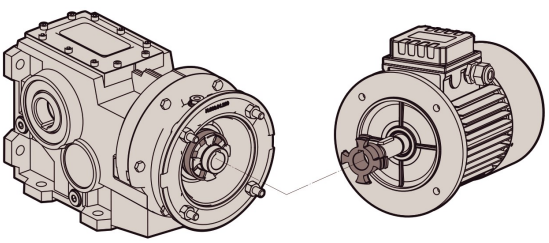

PAM Sleeve

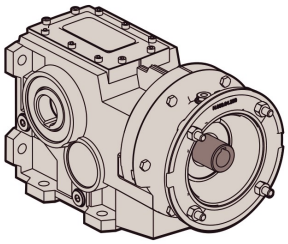

2.1 DESIGN FEATURES

Motovario products are supplied with the following surface treatment features:

Die-cast aluminium alloy cases for gears
Die-cast materials undergo the following surface cleaning operations:
- De-burring by means of a mechanically operated shearing system.
- Accurate shot-peening.
- Painting.
- Washing and passivation.

Grey-coloured cast-iron cases for gears
- Die-cast materials are always painted.

Painting specifications:
- Orange-peel blue epoxy-polyester RAL 5010. Polyester resin based heat-hardening powders, altered with epoxy resins.

Mechanical properties
- Tests carried out onto degreased Unichim white lattens (film thickness: 60 microns) comply with the following specifications: adherence (ISO2409).

Heat resistance
- 24 HOURS AT 150°C.

Corrosion strength
- ASTM B 117/97 salt fog from 100 to 500 hours depending on the support's preliminary treatment.

Performance:
- Loading capacity in accordance with DIN 3990, ISO 6336, AGMA 2101, ISO 10300, DIN 3991, ISO 281, DIN 743

Efficiency η**:**
- The efficiency is the ratio between the output power P_2 and the power absorbed by thegear reducer P_1: $\eta = P_2/P_1$

B/BA-range helical bevel gear reducers have an average value equal to:
B..3 stages = 0,9
BA.2 stages = 0,95
BA.3 stages = 0,9

2.2 TYPOLOGY

2.2.1 Designation

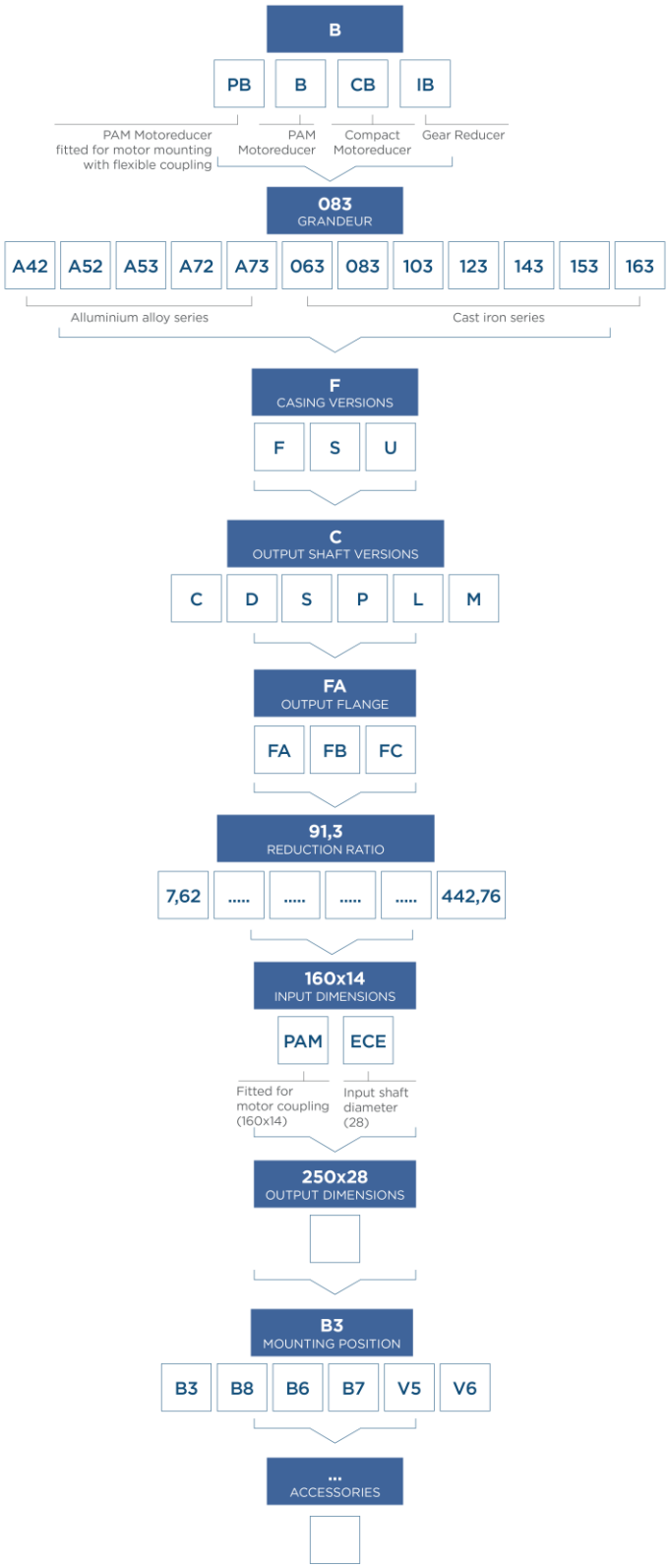

2.2 TYPOLOGY

2.2.2 Versions

A40-A50-A70

C FOOT MOUNTING / HOLLOW SHAFT

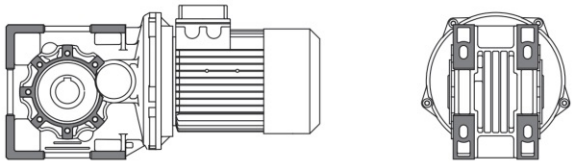

D FOOT MOUNTING / D SOLID SHAFT

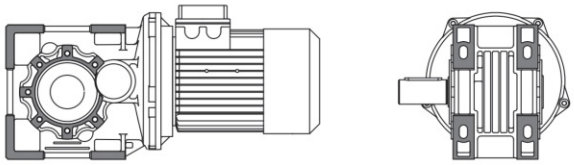

S FOOT MOUNTING / S SOLID SHAFT

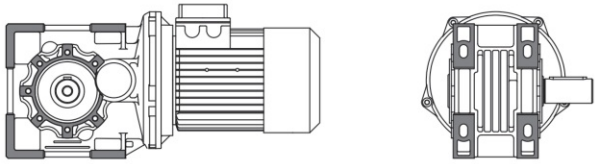

P FOOT MOUNTING / DOUBLE OUTPUT SHAFT

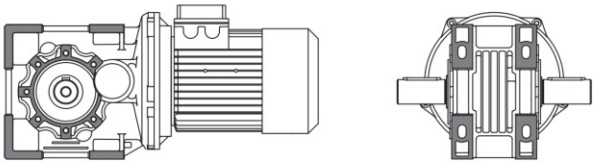

L FOOT MOUNTING /SHRINK DISC SHAFT

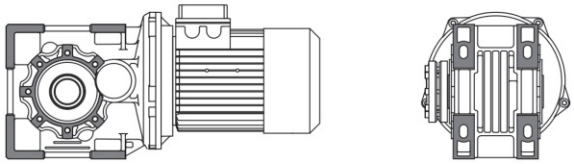

SIZES A42 - A52 - A53
ARE NOT AVAILABLE IN VERSIONS D-S-P

NOTE ATEX GEAR REDUCERS:
AVAILABLE FOR 3G/3D CERTIFICATION, ONLY.

2.2 TYPOLOGY

063 - 083 - 103 - 123

FC FOOT MOUNTING / HOLLOW SHAFT

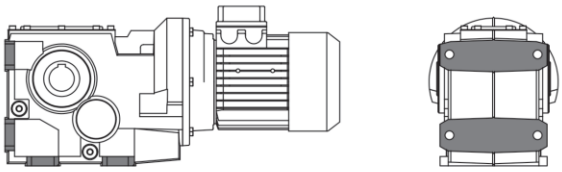

FD FOOT MOUNTING / D SOLID SHAFT

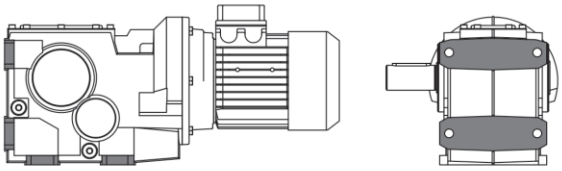

FS FOOT MOUNTING / S SOLID SHAFT

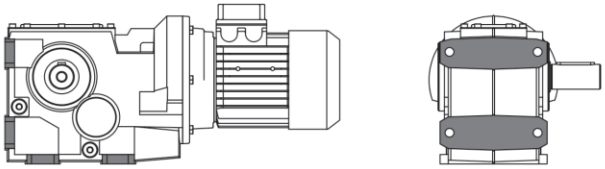

FP FOOT MOUNTING / DOUBLE OUTPUT SHAFT

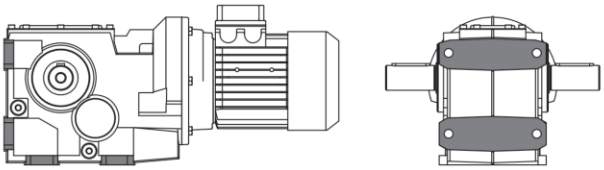

FL FOOT MOUNTING / SHRINK DISC SHAFT

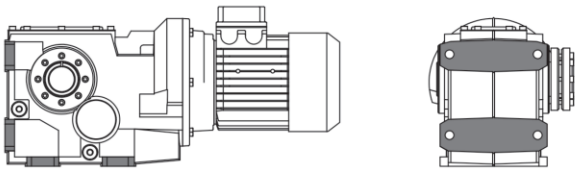

FM FOOT MOUNTING / SHRINK DISC SHAFT

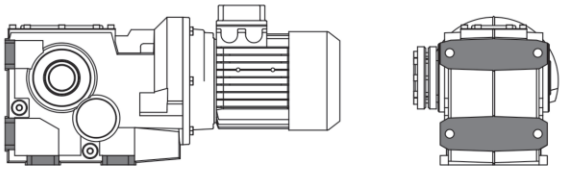

NOTE ATEX GEAR REDUCERS:
FL, FM VERSIONS ARE AVAILABLE FOR 3G/3D
CERTIFICATION, ONLY.

2.2 TYPOLOGY

063 - 083 - 103 - 123

SC FLANGE MOUNTING / HOLLOW SHAFT

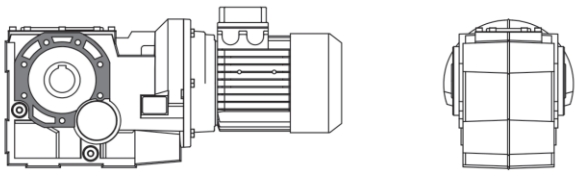

SD FLANGE MOUNTING / D SOLID SHAFT

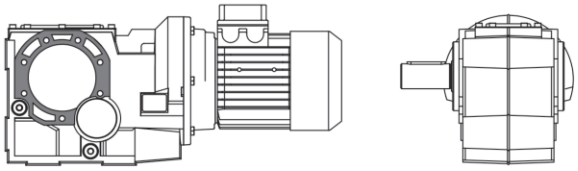

SS FLANGE MOUNTING / S SOLID SHAFT

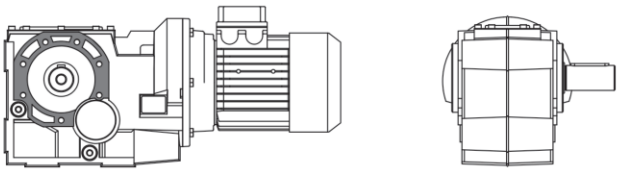

SP FLANGE MOUNTING / DOUBLE OUTPUT SHAFT

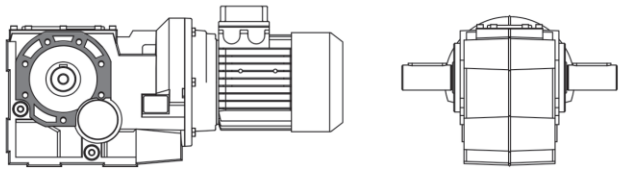

SL FLANGE MOUNTING / HOLLOW SHAFT

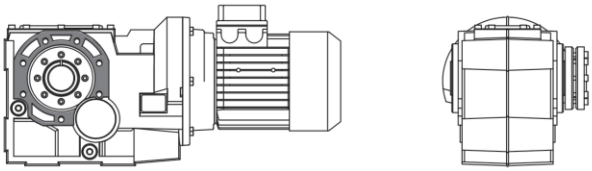

SM FLANGE MOUNTING / D SOLID SHAFT

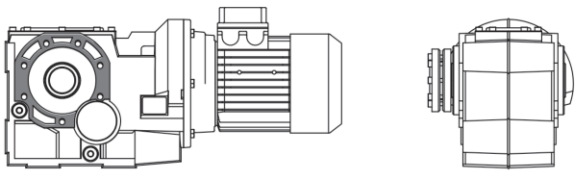

NOTE ATEX GEAR REDUCERS:
SL, SM VERSIONS ARE AVAILABLE FOR 3G/3D
CERTIFICATION, ONLY.

2.2 TYPOLOGY

063 - 083 - 103 - 123 - 143 - 153 - 163

UC FOOT-FLANGE MOUNTING / HOLLOW SHAFT

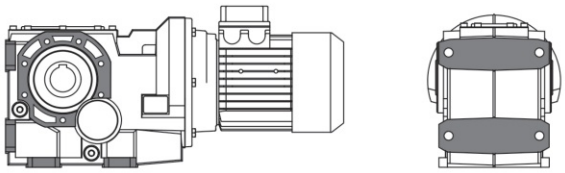

UD FOOT-FLANGE MOUNTING / D SOLID SHAFT

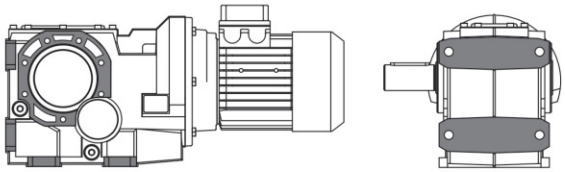

US FOOT-FLANGE MOUNTING / S SOLID SHAFT

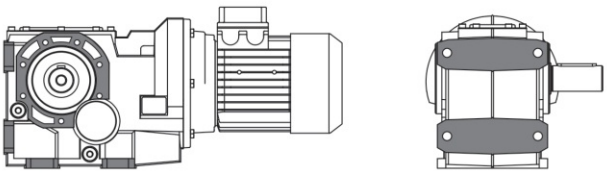

UP FOOT-FLANGE MOUNTING / DOUBLE OUTPUT SHAF

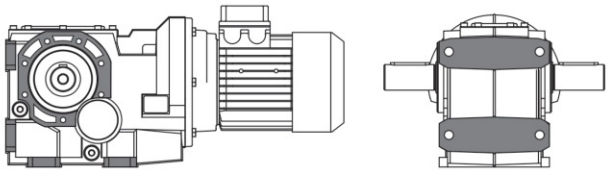

UL FOOT-FLANGE MOUNTING / SHRINK DISC SHAFT

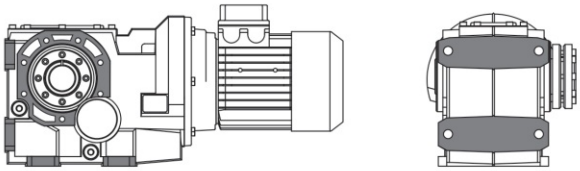

UM FOOT-FLANGE MOUNTING / SHRINK DISC SHAFT

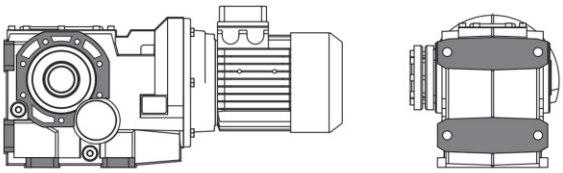

NOTE ATEX GEAR REDUCERS:
UL, UM VERSIONS ARE AVAILABLE FOR 3G/3D
CERTIFICATION, ONLY.

2.2.3 Modularity

BA ALUMINIUM ALLOY SERIES

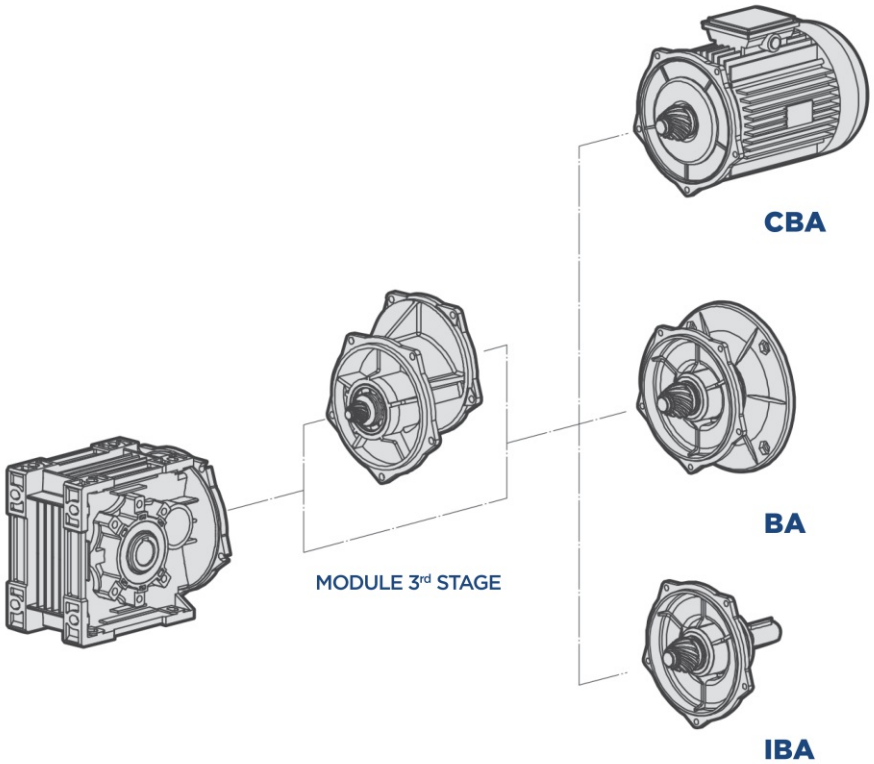

CBA

Compact electric motor versions

BA

Fitted for motor coupling version (PAM)

IBA

Input shaft versions

2.2 TYPOLOGY

B GREY CAST IRON SERIES

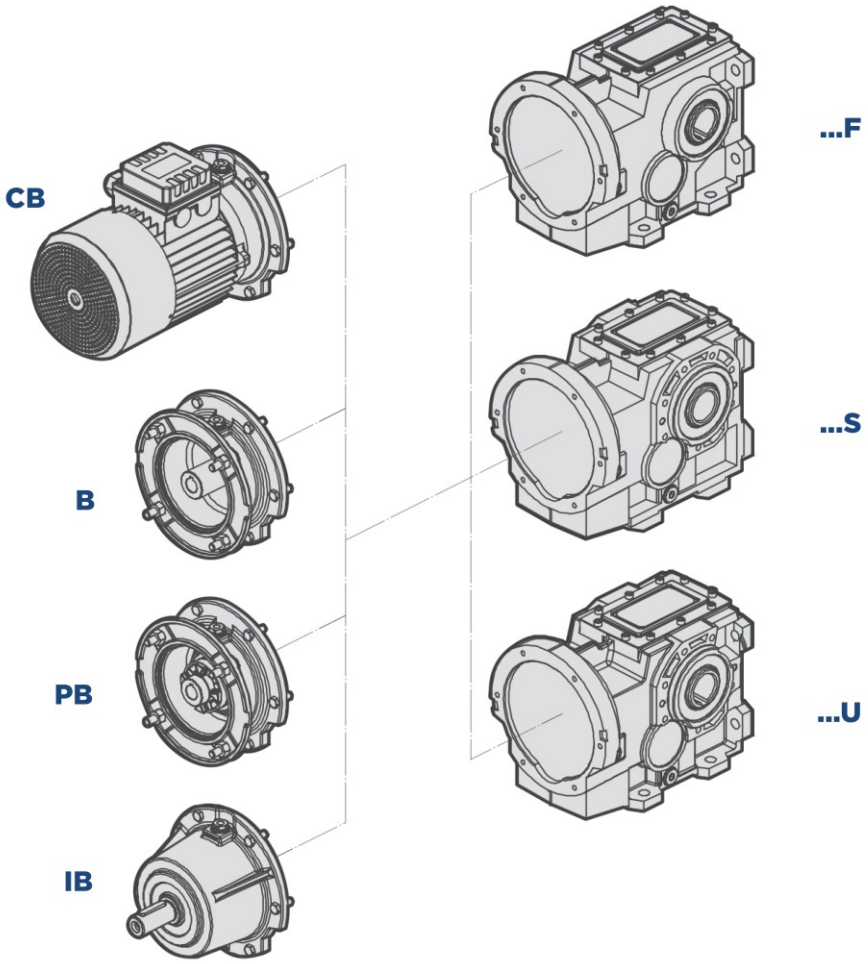

CB

Compact electric motor versions

B

Fitted for motor coupling version (PAM)

PB

Fitted for motor mounting with flexible coupling

IB

Input shaft versions

2.3 MOUNTING POSITIONS

2.3.1 Mounting positions

The mounting position of the gear unit identifies its space orientation. B3 mounting position, as from a technical point of view, ensures lower oil splash, better lubrication and less heating.

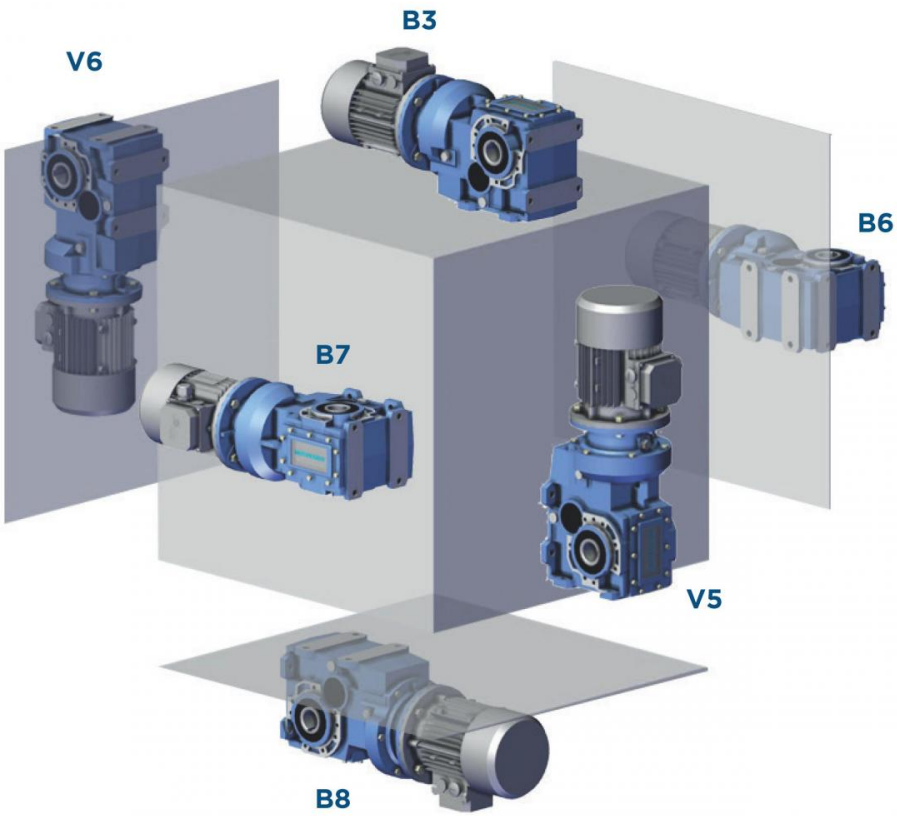

2.3.2 Position of terminal box

Unless otherwise specified when ordering, the gear reducer is supplied with terminal box in position 1.

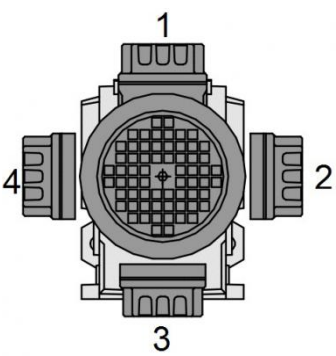

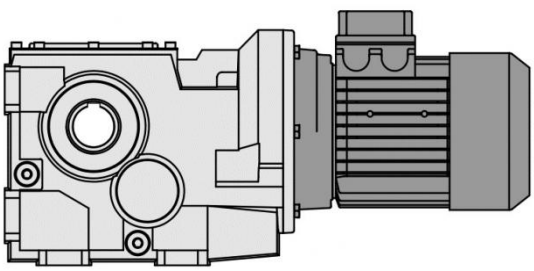

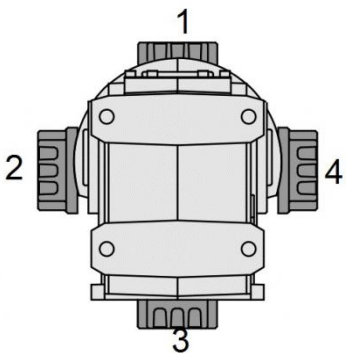

2.4 THERMAL POWER

2.4.1 Information

The scheme below indicates the nominal thermal power capacity [kW] according to the following conditions:

- mounting position B3
- continuous operation at input speed <= 1500 rpm
- environment temperature T_{amb}=25°C
- sea level altitude
- air speed around the gear reducer >=1m/s
- absence of external radial and/or axial loads

n_1 = 1500rpm	
	Pth [kW]
B063	10,5
B083	11
B103	12,5
B123	19
B143	22,5
B153	38
B163	55

A correct lubrication and a proper running condition of the gearbox are guaranteed only applying an input power not exceeding Pth (at the above reference conditions) (T oil max=95°C).

NOTE: For the BA series it is not necessary to check the thermal power.

2.4.2 Verification

Application check

Except for continuous operating times below two hours and successive pauses capable of bringing the gear reducer back to ambient temperature, for each application it is peremptory to verify the gear reducer's thermal limit according to the following formula: **P_1 < Pth * Fc * Fv * Fa,** where:

- P_1 = input power to the gear reducer [kW]
- Pth = thermal power at the reference conditions [kW] (see above table)
- Fc = ambient and operating temperature correction factor
- Fv = ventilation correction factor
- Fa = altitude correction factor

The correction factors refer to different operating conditions compared to the reference conditions, and are provided by the following ISO14179 tables:

		Duty per hour of operation %				
	Fc	100	80	70	40	20
Ambient temperature °C	10	1,15	1,21	1,32	1,55	2,07
	18	1,07	1,12	1,23	1,44	1,93
	25	1,00	1,05	1,15	1,35	1,80
	30	0,93	0,98	1,07	1,26	1,67
	40	0,83	0,87	0,95	1,12	1,49
	43	0,75	0,79	0,86	1,01	1,35
	50	0,67	0,70	0,77	0,90	1,21

Altitude (m)	Fa
0*	1
750	0,95
1500	0,9
2250	0,85
3000	0,81

Ventilation correction factor	Fv
Stagnant air (<0,5 m/s)	0.75
Indoor installation with slight ventilation	1
Indoor installation with good ventilation (>1,4 m/s)	1.4
Installazione all'aperto (>3,7 m/s)	1.9

*Sea level

In case of operation at input speeds exceeding 2000 rpm, or ambient temperatures greater than 40°C, it is advisable to contact out technical department.

2.5 DIRECTION OF ROTATION

Helical bevel reduction units are supplied as “standard” with rotation as shown in the diagram. On request, the direction of rotation of low speed shaft can be reversed; in this case, it is necessary to specify “opposite rotation to catalogue” when ordering. The “opposite rotation to catalogue” is not possible for sizes BA42 - BA52 - BA53.

DIRECTION OF ROTATION - HIGH SPEED SHAFT

B-CB-IB A42-A52-A72

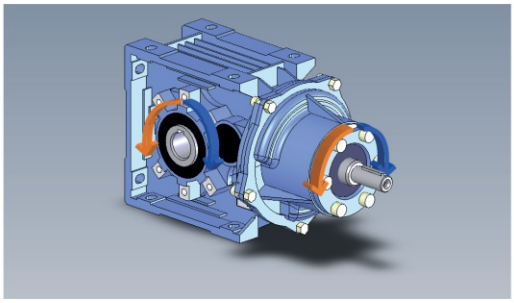

VERSIONS **C-D-P-L**

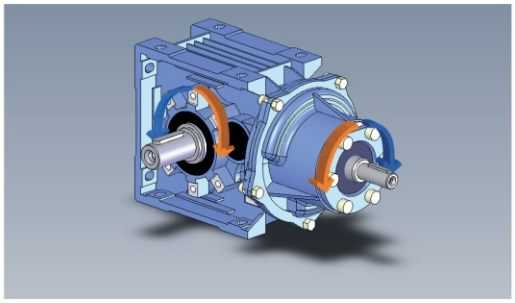

VERSION **S**

B-CB-IB A53-A73

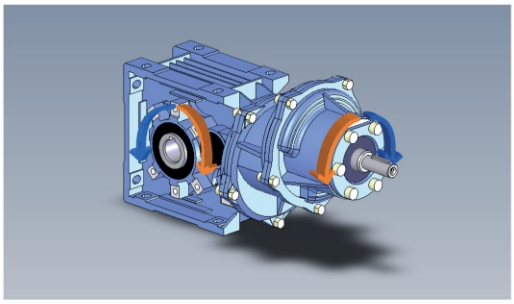

VERSIONS **C-D-P-L**

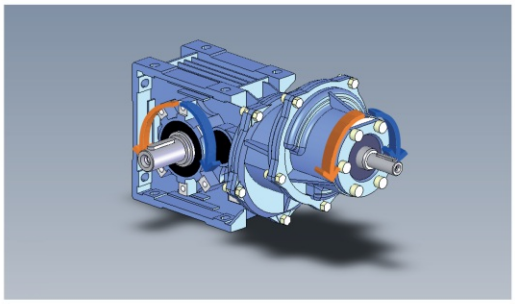

VERSION **S**

B-PB-CB-IB 063-163

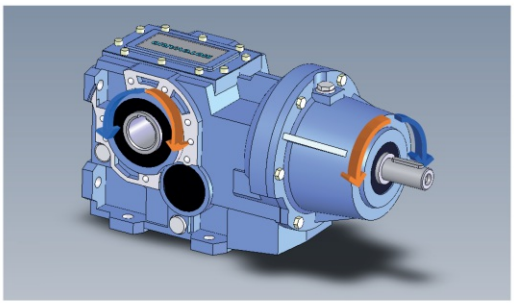

VERSIONS **C-D-P-L**

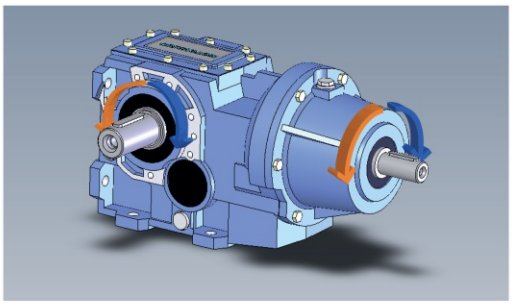

VERSION **S-M**

2.6 CRITICAL APPLICATIONS

2.6.1 Critical applications

B	A40	A50	A70
2000 < n1 < 3000	✔	✔	✔
V6	B	B	B
n1 > 3000	B	B	B
...L : B6 - B7	B	B	B

B	060	080	100	125	140	150	160
2000 < n1 < 3000	✔	✔	✔	B	B	B	B
V6	B	B	B	B	B	B	B
n1 > 3000	B	B	B	B	A	A	A
...L : B6 - B7	B	B	B	B	B	B	B

✔ Verified application
A Application not recommended
B Check the application and/or call our technical service

The shrink disc is designed only to transmit the output torque.
In case of mounting position with radial and/or axial loads, please contact the technical support.

2.6.2 Information

The performance given in the catalogue correspond to mounting position B3 or similar, when the first stage is not entirely immersed in oil. For other mounting positions and/or particular input speeds, refer to the tables that highlight different critical situations for each size of gear reducer. It is also necessary to take due consideration of and carefully assess the following applications by calling our Technical Service:

- To avoid the use as multiplier.
- Use in services that could be hazardous for people if the gear reducer fails.
- Applications with especially high inertia.
- Use as a lifting winch.
- Applications with high dynamic strain on the case of the gear reducer.
- In places with T_{amb} under -5°C or over 40°C.
- Use in chemically aggressive environments.
- Use in a salty environment.
- Mounting positions not envisaged in the catalogue.
- Use in radioactive environments.
- Use in environments pressures other than atmospheric pressure.

Avoid applications where even partial immersion of the reducer is required.
In the presence of overloading due to full load, braking, shocks or other static and dynamic causes, please verify that the peak torque is less than 2^*Mn_2.

2.7 MOTOR FLANGE AVAILABILITY

2.7.1 BA Motor flange availability

B10 = Compact electric motor versions.

These tables report all possible dimensions. Please verify service factor.

NOTE Atex gear reducers: available for 3G/3D certification, only.

	i	063	071	080	090	100	112
CB A42	7,62 ÷ 64,13	B10	B10	B10			
CB A42	78,17	B10	B10				
CB A52	7,91 ÷ 31,63	B10	B10	B10	B10		
CB A52	35,1 ÷ 64,87	B10	B10	B10			
CB A52	79,07	B10	B10				
CB A53	73,7 ÷ 172,53	B10	B10	B10	B10		
CB A53	197,11 ÷ 342,65	B10	B10				
CB A72	8,36 ÷ 22,19				B10	B10	B10
CB A72	27,45 ÷ 40,87			B10	B10	B10	B10
CB A72	45,64 ÷ 67,96			B10	B10		
CB A73	43,89 ÷ 222,93	B10	B10	B10	B10		
CB A73	260,2 ÷ 442,76	B10	B10				

	i	063	071	080	090	100	112
BA42	7,62 ÷ 64,13	B5	B5-B14	B5 - B14			
BA42	78,17	B5	B5-B14				
BA52	7,91 ÷ 31,63	B5	B5-B14	B5-B14	B5-B14		
BA52	35,1 ÷ 64,87	B5	B5-B14	B5-B14			
BA52	79,07	B5	B5-B14				
BA53	73,7 ÷ 172,53	B5	B5-B14	B5-B14	B5-B14		
BA53	197,11 ÷ 342,65	B5	B5-B14				
BA72	8,36 ÷ 22,19				B5-B14	B5-B14	B5-B14
BA72	27,45 ÷ 40,87			B5-B14	B5-B14	B5-B14	B5-B14
BA72	45,64 ÷ 67,96			B5-B14	B5-B14		
BA73	43,89 ÷ 222,93	B5	B5-B14	B5-B14	B5-B14		
BA73	260,2 ÷ 442,76	B5	B5-B14				

2.7 MOTOR FLANGE AVAILABILITY

2.7.2 B Motor flange availability

B11 = Compact electric motor versions.
These tables report all possible dimensions. Please verify service factor.
*For motor size 063 the PB version does not exist.

NOTE Atex geared motors (versions with compact electric motor B11): available for 3G/3D certification, only.

CB - B - PB 063					
i	*063	071	080	090	100-112
5,71			B5-B11	B5-B11	B5-B11
6,88			B5-B11	B5-B11	B5-B11
7,32		B5-B11	B5-B11	B5-B11	B5-B11
9,16			B5-B11	B5-B11	B5-B11
10,26			B5-B11	B5-B11	B5-B11
11,03			B5-B11	B5-B11	B5-B11
12,35			B5-B11	B5-B11	B5-B11
13,15		B5-B11	B5-B11	B5-B11	B5-B11
15,18		B5-B11	B5-B11	B5-B11	B5-B11
17,00		B5-B11	B5-B11	B5-B11	B5-B11
22,39		B5-B11	B5-B11	B5-B11	B5-B11
26,09			B5-B11	B5-B11	B5-B11
28,03			B5-B11	B5-B11	B5-B11
33,43		B5-B11	B5-B11	B5-B11	B5-B11
38,58		B5-B11	B5-B11	B5-B11	B5-B11
43,22		B5-B11	B5-B11	B5-B11	B5-B11
50,81		B5-B11	B5-B11	B5-B11	B5-B11
56,93		B5-B11	B5-B11	B5-B11	B5-B11
69,16	B5-B11	B5-B11	B5-B11	B5-B11	
77,48	B5-B11	B5-B11	B5-B11	B5-B11	
90,33	B5-B11	B5-B11	B5-B11		
101,20	B5-B11	B5-B11	B5-B11		
111,74	B5-B11	B5-B11	B5-B11		
124,20	B5-B11	B5-B11	B5-B11		
139,15	B5-B11	B5-B11	B5-B11		
157,42	B5-B11	B5-B11	B5-B11		

CB - B - PB 083					
i	080	090	100	112	132
7,81	B5-B11	B5-B11	B5-B11	B5-B11	B5-B11
8,62	B5-B11	B5-B11	B5-B11	B5-B11	B5-B11
10,49	B5-B11	B5-B11	B5-B11	B5-B11	B5-B11
11,59	B5-B11	B5-B11	B5-B11	B5-B11	B5-B11
14,43	B5-B11	B5-B11	B5-B11	B5-B11	B5-B11
16,60	B5-B11	B5-B11	B5-B11	B5-B11	B5-B11
18,32	B5-B11	B5-B11	B5-B11	B5-B11	B5-B11
22,82	B5-B11	B5-B11	B5-B11	B5-B11	B5-B11
26,71	B5-B11	B5-B11	B5-B11	B5-B11	B5-B11
29,50	B5-B11	B5-B11	B5-B11	B5-B11	B5-B11
31,80	B5-B11	B5-B11	B5-B11	B5-B11	B5-B11
34,49	B5-B11	B5-B11	B5-B11	B5-B11	B5-B11
39,60	B5-B11	B5-B11	B5-B11	B5-B11	B5-B11
42,95	B5-B11	B5-B11	B5-B11	B5-B11	B5-B11
45,44	B5-B11	B5-B11	B5-B11	B5-B11	B5-B11
51,19	B5-B11	B5-B11	B5-B11	B5-B11	B5-B11
55,52	B5-B11	B5-B11	B5-B11	B5-B11	B5-B11
59,96	B5-B11	B5-B11	B5-B11	B5-B11	B5-B11
63,74	B5-B11	B5-B11	B5-B11	B5-B11	B5-B11
69,14	B5-B11	B5-B11	B5-B11	B5-B11	B5-B11
73,14	B5-B11	B5-B11	B5-B11	B5-B11	B5-B11
80,76	B5-B11	B5-B11	B5-B11	B5-B11	B5-B11
92,19	B5-B11	B5-B11	B5-B11	B5-B11	
100,57	B5-B11	B5-B11	B5-B11	B5-B11	B5-B11
105,29	B5-B11	B5-B11	B5-B11	B5-B11	
116,25	B5-B11	B5-B11	B5-B11	B5-B11	
126,76	B5-B11	B5-B11	B5-B11	B5-B11	
144,77	B5-B11	B5-B11	B5-B11	B5-B11	

2.7 MOTOR FLANGE AVAILABILITY

CB - B - PB 103						
i	080	090	100	112	132	160
8,13	B5-B11	B5-B11	B5-B11	B5-B11	B5-B11	B5
8,97	B5-B11	B5-B11	B5-B11	B5-B11	B5-B11	B5
10,92	B5-B11	B5-B11	B5-B11	B5-B11	B5-B11	B5
12,05	B5-B11	B5-B11	B5-B11	B5-B11	B5-B11	B5
14,99	B5-B11	B5-B11	B5-B11	B5-B11	B5-B11	B5
17,27	B5-B11	B5-B11	B5-B11	B5-B11	B5-B11	B5
19,06	B5-B11	B5-B11	B5-B11	B5-B11	B5-B11	B5
23,70	B5-B11	B5-B11	B5-B11	B5-B11	B5-B11	B5
26,51	B5-B11	B5-B11	B5-B11	B5-B11	B5-B11	B5
30,55	B5-B11	B5-B11	B5-B11	B5-B11	B5-B11	B5
33,07	B5-B11	B5-B11	B5-B11	B5-B11	B5-B11	
35,87	B5-B11	B5-B11	B5-B11	B5-B11	B5-B11	
41,12	B5-B11	B5-B11	B5-B11	B5-B11	B5-B11	
44,61	B5-B11	B5-B11	B5-B11	B5-B11	B5-B11	
47,28	B5-B11	B5-B11	B5-B11	B5-B11	B5-B11	
50,24	B5-B11	B5-B11	B5-B11	B5-B11	B5-B11	
53,02	B5-B11	B5-B11	B5-B11	B5-B11	B5-B11	
58,50	B5-B11	B5-B11	B5-B11	B5-B11	B5-B11	
64,89	B5-B11	B5-B11	B5-B11	B5-B11	B5-B11	
68,58	B5-B11	B5-B11	B5-B11	B5-B11	B5-B11	
72,76	B5-B11	B5-B11	B5-B11	B5-B11	B5-B11	
78,92	B5-B11	B5-B11	B5-B11	B5-B11	B5-B11	
83,66	B5-B11	B5-B11	B5-B11	B5-B11	B5-B11	
92,31	B5-B11	B5-B11	B5-B11	B5-B11	B5-B11	
105,44	B5-B11	B5-B11	B5-B11	B5-B11		
114,80	B5-B11	B5-B11	B5-B11	B5-B11	B5-B11	
120,42	B5-B11	B5-B11	B5-B11	B5-B11		
132,87	B5-B11	B5-B11	B5-B11	B5-B11		
144,69	B5-B11	B5-B11	B5-B11	B5-B11		
165,25	B5-B11	B5-B11	B5-B11	B5-B11		

CB - B - PB 123						
i	090	100	112	132	160	180
7,97				B5-B11	B5	B5
9,62				B5-B11	B5	B5
10,33				B5-B11	B5	B5
12,48				B5-B11	B5	B5
13,84				B5-B11	B5	B5
15,38				B5-B11	B5	B5
18,58				B5-B11	B5	B5
20,61				B5-B11	B5	B5
22,78				B5-B11	B5	B5
25,89		B5-B11	B5-B11	B5-B11	B5	B5
27,51				B5-B11	B5	B5
30,79				B5-B11	B5	B5
31,26		B5-B11	B5-B11	B5-B11	B5	B5
34,68		B5-B11	B5-B11	B5-B11	B5	B5
40,53		B5-B11	B5-B11	B5-B11	B5	B5
44,89		B5-B11	B5-B11	B5-B11	B5	B5
49,80		B5-B11	B5-B11	B5-B11	B5	B5
54,30		B5-B11	B5-B11	B5-B11	B5	B5
59,36		B5-B11	B5-B11	B5-B11	B5	B5
62,59		B5-B11	B5-B11	B5-B11	B5	B5
69,43		B5-B11	B5-B11	B5-B11	B5	B5
74,42		B5-B11	B5-B11	B5-B11	B5	B5
80,04	B5-B11	B5-B11	B5-B11	B5-B11		
89,87		B5-B11	B5-B11	B5-B11	B5	B5
99,70		B5-B11	B5-B11	B5-B11	B5	B5
106,65	B5-B11	B5-B11	B5-B11	B5-B11		
119,60	B5-B11	B5-B11	B5-B11	B5-B11		
129,96	B5-B11	B5-B11	B5-B11	B5-B11		
144,43	B5-B11	B5-B11	B5-B11	B5-B11		
160,23	B5-B11	B5-B11	B5-B11	B5-B11		
180,40	B5-B11	B5-B11	B5-B11	B5-B11		

2.7 MOTOR FLANGE AVAILABILITY

CB - B - PB 143						
i	100	112	132	160	180	200
10,84			B5-B11	B5	B5	B5
11,87			B5-B11	B5	B5	B5
14,49			B5-B11	B5	B5	B5
17,04			B5-B11	B5	B5	B5
18,66			B5-B11	B5	B5	B5
21,00			B5-B11	B5	B5	B5
22,77			B5-B11	B5	B5	B5
25,63			B5-B11	B5	B5	B5
27,44	B5-B11	B5-B11	B5-B11	B5	B5	B5
30,05	B5-B11	B5-B11	B5-B11	B5	B5	B5
33,01			B5-B11	B5	B5	B5
36,67	B5-B11	B5-B11	B5-B11	B5	B5	B5
40,29			B5-B11	B5	B5	B5
44,16	B5-B11	B5-B11	B5-B11	B5	B5	B5
48,35	B5-B11	B5-B11	B5-B11	B5	B5	B5
53,16	B5-B11	B5-B11	B5-B11	B5	B5	B5
54,63	B5-B11	B5-B11	B5-B11	B5	B5	B5
59,02	B5-B11	B5-B11	B5-B11	B5	B5	B5
64,88	B5-B11	B5-B11	B5-B11	B5	B5	B5
70,43	B5-B11	B5-B11	B5-B11	B5	B5	
77,12	B5-B11	B5-B11	B5-B11	B5	B5	
85,54	B5-B11	B5-B11	B5-B11	B5	B5	B5
94,13	B5-B11	B5-B11	B5-B11	B5	B5	
105,83	B5-B11	B5-B11	B5-B11			
111,94	B5-B11	B5-B11	B5-B11	B5	B5	
124,62	B5-B11	B5-B11	B5-B11	B5	B5	
136,44	B5-B11	B5-B11	B5-B11	B5	B5	
149,59	B5-B11	B5-B11	B5-B11	B5	B5	
166,53	B5-B11	B5-B11	B5-B11	B5	B5	
187,24	B5-B11	B5-B11	B5-B11			

CB - B - PB 153					
i	132	160	180	200	225
10,49		B5	B5	B5	B5
12,64		B5	B5	B5	B5
14,01		B5	B5	B5	B5
15,40		B5	B5	B5	B5
18,56		B5	B5	B5	B5
20,56		B5	B5	B5	B5
23,86		B5	B5	B5	B5
25,19	B5	B5	B5	B5	B5
28,23	B5	B5	B5	B5	B5
30,35	B5	B5	B5	B5	B5
33,63	B5	B5	B5	B5	B5
35,02		B5	B5	B5	B5
38,81		B5	B5	B5	B5
42,30	B5	B5	B5	B5	B5
47,53	B5	B5	B5	B5	B5
50,56	B5	B5	B5	B5	B5
54,64	B5	B5	B5	B5	B5
57,27	B5	B5	B5	B5	B5
60,92	B5	B5	B5	B5	B5
63,47	B5	B5	B5	B5	B5
71,10	B5	B5	B5		
77,22	B5	B5	B5	B5	B5
83,90	B5	B5	B5		
87,70	B5	B5	B5		
93,05	B5	B5	B5	B5	B5
103,12	B5	B5	B5	B5	B5
123,90	B5	B5	B5		
134,30	B5	B5	B5		
149,30	B5	B5	B5		
165,40	B5	B5	B5		

CB - B - PB 163						
i	160	180	200	225	250	280
8,89		B5	B5	B5	B5	B5
10,58		B5	B5	B5	B5	B5
11,87		B5	B5	B5	B5	B5
12,81		B5	B5	B5	B5	B5
14,08		B5	B5	B5	B5	B5
15,52		B5	B5	B5	B5	B5
16,39		B5	B5	B5	B5	B5
18,02	B5	B5	B5	B5	B5	B5
19,96	B5	B5	B5	B5	B5	
21,94	B5	B5	B5	B5	B5	B5
24,17	B5	B5	B5	B5	B5	B5
26,58	B5	B5	B5	B5	B5	B5
28,80	B5	B5	B5	B5	B5	
30,92	B5	B5	B5	B5	B5	B5
34,25	B5	B5	B5	B5	B5	
37,66	B5	B5	B5	B5	B5	
40,65	B5	B5	B5	B5	B5	
45,09	B5	B5	B5	B5	B5	
51,00	B5	B5	B5	B5	B5	
53,63	B5	B5	B5	B5	B5	
58,97	B5	B5	B5	B5	B5	
69,78	B5	B5	B5	B5		
76,72	B5	B5	B5			
87,54	B5	B5	B5			
96,25	B5	B5	B5			
103,93	B5	B5	B5			
114,27	B5	B5				
126,29	B5	B5				
138,85	B5	B5				
154,83	B5	B5				

2.8 OUTPUT SHAFT BEARINGS

BA		BA40		BA50		BA70	
Versions (*)		Standard	On request	Standard	On request	Standard	On request
U	C	1	/	1	/	1	/
	D/S/P	/	/	/	/	1	/
	L/M	1	/	1	/	1	/

(*) N.B. sizes A42 - A52 - A53 are not available in versions D-S-P.

B		B060		B080		B100/125		B140/150/160	
Versions		Standard	On request	Standard	On request	Standard	On request	Standard	On request
U	C	2	/	2 (Ø40)	1 (Ø45)	2	/	2	/
	D/S/P	2	/	2	/	2	/	2	/
	L/M	1	/	1	/	1	/	2	/
F/S	C	1	2	1	2	1	2	/	/
	D/S/P	2	/	2	/	2	/	/	/
	L/M	1	/	1	/	1	/	/	/

1 - Ball Bearing

2 - Roller bearings

/ - Not available

2.9 OVERHUNG LOAD

2.9.1 Information

The value of the admissible radial load [N] is given in the tables relating to the performance of the gear reducer at issue. It is related to the load applied on the centre line of the shaft and in the most unfavourable conditions of angle of application and direction of rotation. The maximum admissible axial loads are 1/5 of the value of the given radial load when they are applied in combination with the radial load. The tables relating to the output shafts give the maximum admissible value. This value must never be exceeded since it relates to the strength of the case. Particular conditions of radial load higher than the limits of the catalogue may occur. In this case, call our Technical Sevice and provide details on the application: direction of the load, direction of rotation of the shaft, type of service. In case of double extension shafts with radial load applied on both ends, the max. admissible radial loads must be defined according to the specific running conditions, in this case call our Technical Service. The radial load on the shaft is calculated with the following formula: **Fre=(2000*M*fz)/D≤Fr1 or Fr2**

- **Fre** [N] Resulting radial load
- **M** [Nm] Torque on the shaft
- **D** [mm] Diameter of the transmission member mounted on the shaft
- **Fr1-Fr2** [N] Value of the maximum admitted radial load (see relative tables)
- **fz** = 1,1 gear pinion - 1,4 chain wheel - 1,7 v-pulley - 2,5 flat pulley

2.9.2 Input

When the radial load is not on the centre line of the shaft, it is necessary to adjust the admissible radial load Fr1 with the following formula: **Frx=(Fr1*a)/(b+x)**

- **a** , **b** = values given in the tables
- **x** = distance from the point of application of the load to the shaft shoulder

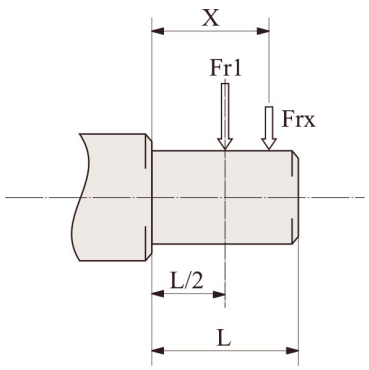

IB	A42 A52 A53 A73	A72
a	84	89
b	64	69
Fr1 max (**)	500	830

IB	063	083	103	123	143	153	163
a	105	137	137	175	175	225	221
b	80	108	108	135	135	170	166
Fr1 max (**)	2200	2500	3200	4200	7000	10000	12000

(**Fr1 max) Max admissible value of the reducer in static conditions and/or for limited operations. For continuous overhung loads please check the values on the performances tables calculated according to the casing, the shaft and bearings.

2.9.3 Output

When the radial load is not on the centre line of the shaft, it is necessary to adjust the admissible radial load Fr2 with the following formula: **Frx=(Fr2*a)/(b+x)**

- **a** , **b** = values given in the tables
- **x** = distance from the point of application of the load to the shaft shoulder

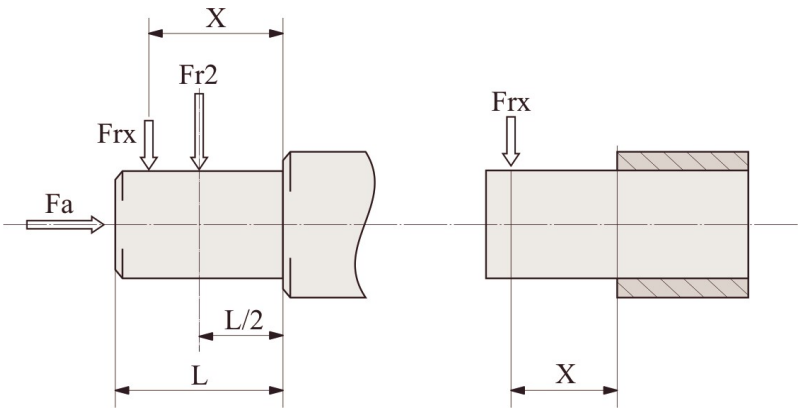

B	A42	A52 A53	A72 A73
a	105	119	145
b	85	94	116
D-S-P (Fr2 max **)	-	-	10000
C (Fr2 max **)	4000	4000	5500

B	063	083	103	123	143	153	163
a	129	190	225	262	306	348	468
b	100	150	175	202	236	278	363
D-S-P (Fr2 max **)	12000	18000	22000	30000	40000	65000	80000
C (Fr2 max **)	8000	12000	15000	20000	40000	65000	65000

(**Fr2 max) Max admissible value of the reducer in static conditions and/or for limited operations. For continuous overhung loads please check the values on the performances tables calculated according to the casing, the shaft and bearings.

2.10 LUBRICATION

2.10.1 Information

In cases of ambient temperatures not envisaged in the table, call our Technical Service. In the case of temperatures under -30°C or over 60°C it is necessary to use oil seals with special properties. For operating ranges with temperatures under 0°C it is necessary to consider the following:

1. The motors need to be suitable for operation at the envisaged ambient temperature.
2. The power of the electric motor needs to be adequate for exceeding the higher starting torques required.
3. In case of cast-iron gear reducers, pay attention to impact loads since cast iron may have problems of fragility at temperatures under -15°C.
4. During the early stages of service, problems of lubrication may arise due to the high level of viscosity taken on by the oil and so it is wise to have a few minutes of rotation under no load.

For Atex gear reducers:

- Change oil as specified in the "Maintenance" table of the relevant "Use and Installation Instructions" manual (supplied with products).
- The use of oils other than the original one is forbidden.

2.10.2 Lubricants

Specifications of lubricants recommended by Motovario.
All units are supplied with ENI BLASIA 220 oil, unless otherwise specified by the client.

	B063 ÷ 163		BA42 ÷ A72/3
	Mineral oil		Mineral oil
T_{amb}°C ISO/SAE	(-5) ÷ (+40) ISO VG220	(-15) ÷ (+25) ISO VG150	(-5) ÷ (+40) SAE 85W-140
ENI	BLASIA 220	BLASIA 150	ROTRA MP (85W-140)
SHELL	OMALA OIL220	OMALA OIL150	SPIRAX S2 A 85W-140
KLUBER	Kluberoil GEM 1-220N	Kluberoil GEM 1-150N	Klubersynth GH 6-460
MOBIL	MOBILGEAR 600 XP220	MOBILGEAR 600 XP150	-
CASTROL	ALPHA SP 220	ALPHA SP 150	-
BP	ENERGOL GR-XP220	ENERGOL GR-XP150	-

2.10.3 Special lubricants

	T_{amb}°C	Polyglicol synthetic oil
ENI	**(-30) ÷ (+30)**	Blasia S 150 (ISO VG150)
	(-20) ÷ (+40)	Blasia S 220 (ISO VG220)
MOBIL	**(-45) ÷ (+0)**	SCH 624 (ISO VG32)
	(-40) ÷ (+5)	SCH 626 (ISO VG68)
KLUBER	**(-40) ÷ (+5)**	Klubersynth GH 6-32 (ISO VG32)
	(-35) ÷ 10)	Klubersynth GH 6-80 (ISO VG80)
	(-30) ÷ (+40)	Klubersynth GH 6-150 (ISO VG150)
	(-25) ÷ (+40)	Klubersynth GH 6-220 (ISO VG220)
	(-15) ÷ (+50)	Klubersynth GH 6-460 (ISO VG460)
	(-10) ÷ (+70)	Klubersynth GH 6-680 (ISO VG680)

	T_{amb}°C	Polyglicol synthetic oil for food grade
KLUBER	**(-30) ÷ (+15)**	Klubersynth UH1-6 100 (ISO VG100)
	(-25) ÷ (+40)	Klubersynth UH1-6 220 (ISO VG220)
	(-15) ÷ (+40)	Klubersynth UH1-6 320 (ISO VG320)
	(-15) ÷ (+50)	Klubersynth UH1-6 460 (ISO VG460)
	(-10) ÷ (+50)	Klubersynth UH1-6 680 (ISO VG680)

If ‘special’ lubricant is required please contact for Technical Assistance.

2.10.4 Quantity

- For the reduction units B series it is always necessary to specify the mounting position.
- The reduction units BA.. series with 2, 3 stages and B060, are supplied complete with lubricant, have no oil plugs and need no maintenance.
- The gear reducer B series sizes 080, 100, 125, 140, 150, 160 are supplied complete with lubricant and are fitted with oil plugs to suit any mounting position included in the catalogue.

It is recommended, after installation, to replace the closed plug used for transportation with the supplied breather plug. The amount of oil in the table (litres ~) are merely indicative only and for the proper topping up you will have to refer to the level plug or the dipstick, if any. Any deviations in level can depend on construction tolerances but also by the placement of the unit or by the mounting surface at the customers' premises. For this reason it is appropriate that the customer checks and, if necessary, restores the level when the unit are installed.

B	A42	A52	A53	A72	A73
B3	0,33	0,42	0,63	1	1,21
B8					
B6/B7					
V5					
V6					

CB	A42	A52	A53	A72	A73
B3	0,33	0,42	0,55	1	1,13
B8					
B6/B7					
V5					
V6					

B-CB	063	083	103	123	143	153	163
B3	1,2	2,5	3,7	5,7	11,1	19	33
B8	1,5	2,8	4,2	7,9	13	17,5	42,8
B6	1,5	3,5	6	8,5	14,5	26	43
B7	1,5	2,8	3,9	7,3	11,8	19	30
V5	2,1	3,7	7	9,9	18,5	32,5	54,5
V6	1,3	2,6	4,5	6,7	10,8	16,5	37,3

2.11 MOMENTS OF INERTIA

The following values of J_1 moment of inertia are only estimated, referred to the maximum calculated, and to the gearbox input side.

BA-2/3	J_1 [Kg*m^2]
A42	0,0011
A52/A53	0,0012
A72/A73	0,0034

B	J_1 [Kg*m^2]
063	0,0011
083	0,0025
103	0,007
123	0,01
143	0,023
153	0,0348
163	0,0929

3.1.1 BA.2

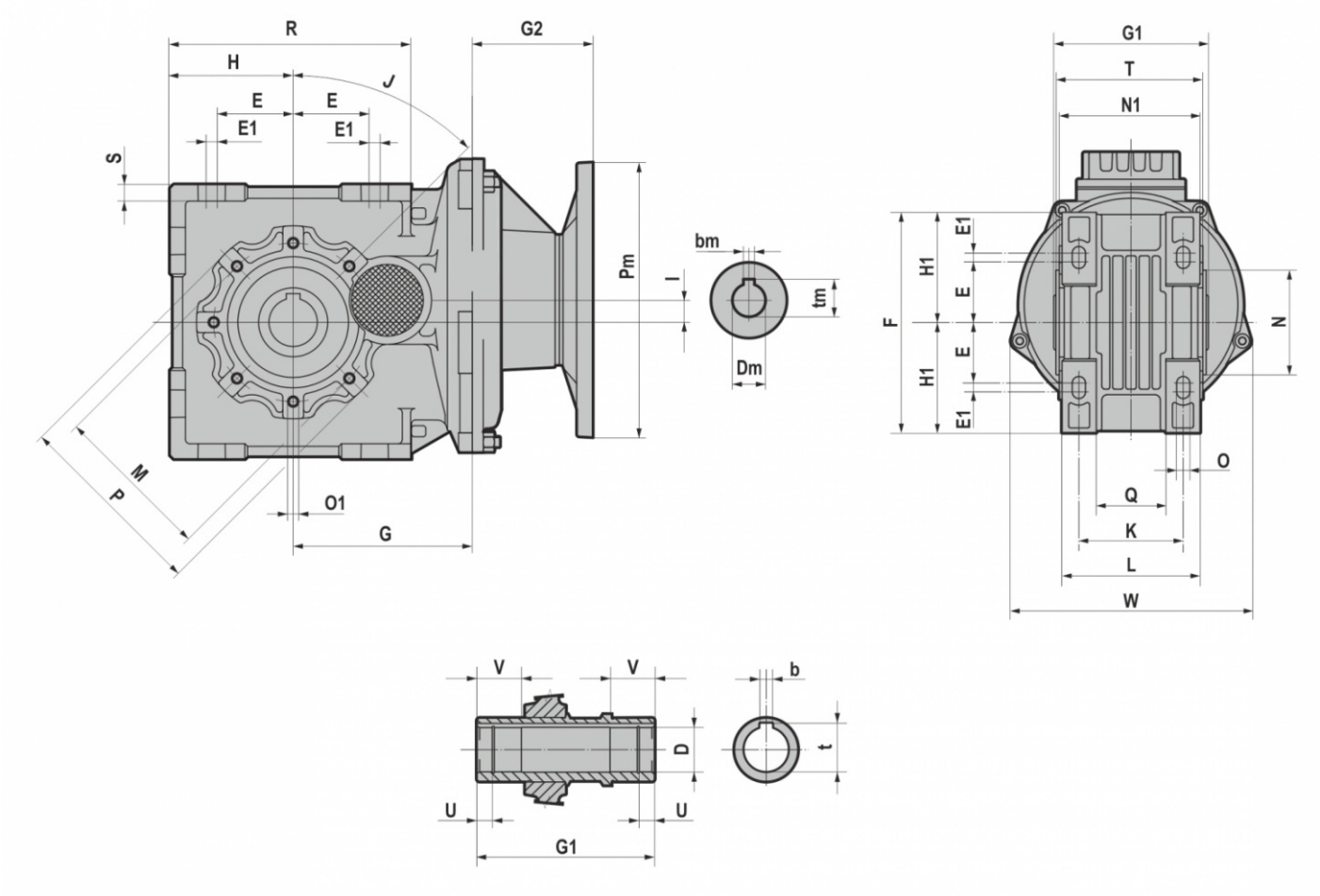

	D H7	b	t	U	V	E	E1	F	G	G1	H	H1	I	J	K	L	M	N	N1	O	O1	P	Q	R	S	T	W
BA42	20	6	22,8	/	30	45	/	130	95	100	65	65	8	45	73,5	90	85	70	92	9	M8x12 n.4	100	45	127,5	8	97	152
BA52	25	8	28,3	/	30	55	/	160	98	112	80	80	4,2	45	80	100	95	80	102	9	M8x14 n.6	110	51	153	10	108	152
	28	8	31,1																								
BA72	35	10	38,3	12	35	55	8	200	129,5	140	90	100	16	45	94,5	125	115	95	130	12	M8x14 n.7	136	63	175	12	136	218
	30	8	33,3																								

			G2	
IEC	Pm x Dm	Pm x Dm	BA42-BA52	BA72
063	**140x11**	**090x11**	55	/
071	**160x14**	**105x14**	55	/
080	**200x19**	**120x19**	86	87,5
090	**200x24**	**140x24**	86	87,5
100-112	**250x28**	**160x28**	/	87,5

B5	Pm	Dm	bm	tm
063	140	11	4	12,8
071	160	14	5	16,3
080	200	19	6	21,8
090	200	24	8	27,3
100	250	28	8	31,3
112	250	28	8	31,3

B14	Pm	Dm	bm	tm
063	90	11	4	12,8
071	105	14	5	16,3
080	120	19	6	21,8
090	140	24	8	27,3
100	160	28	8	31,3
112	160	28	8	31,3

3.1.2 BA.3

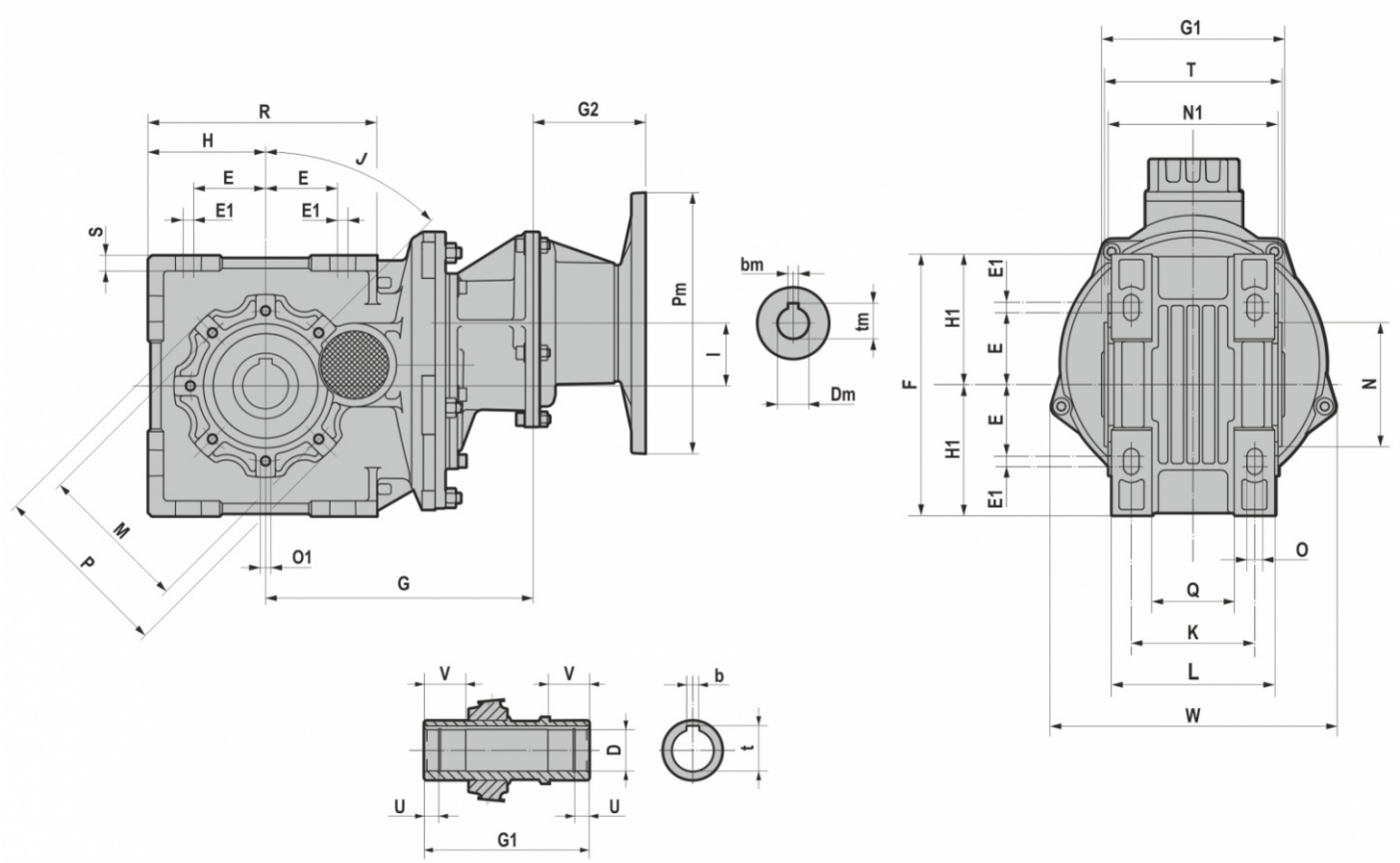

	D H7	b	t	U	V	E	E1	F	G	G1	H	H1	I	J	K	L	M	N	N1	O	O1	P	Q	R	S	T	W
BA53	25	8	28,3	/	30	55	/	160	162	112	80	80	36,2	45	80	100	95	80	102	9	M8x14 n.6	110	51	153	10	108	152
	28	8	31,1																								
BA73	35	10	38,3	12	35	55	8	200	204,5	140	90	100	48	45	94,5	125	115	95	130	12	M8x14 n.7	136	63	175	12	136	218
	30	8	33,3																								

			G2
IEC	Pm x Dm	Pm x Dm	BA53-BA73
063	**140X11**	**090x11**	55
071	**160X14**	**105x14**	55
080	**200X19**	**120x19**	86
090	**200X24**	**140x24**	86

B5	Pm	Dm	bm	tm
063	140	11	4	12,8
071	160	14	5	16,3
080	200	19	6	21,8
090	200	24	8	27,3
100	250	28	8	31,3
112	250	28	8	31,3

B14	Pm	Dm	bm	tm
063	90	11	4	12,8
071	105	14	5	16,3
080	120	19	6	21,8
090	140	24	8	27,3
100	160	28	8	31,3
112	160	28	8	31,3

3.1.3 CBA.2

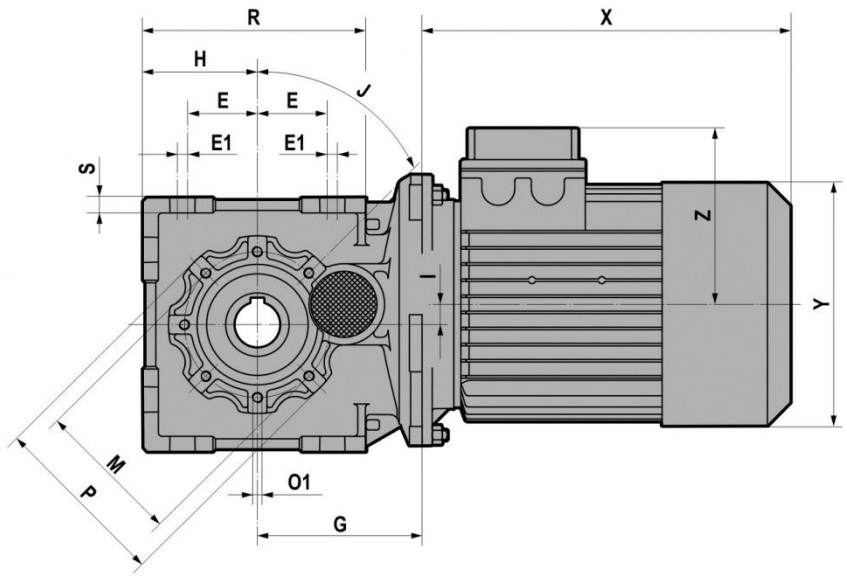

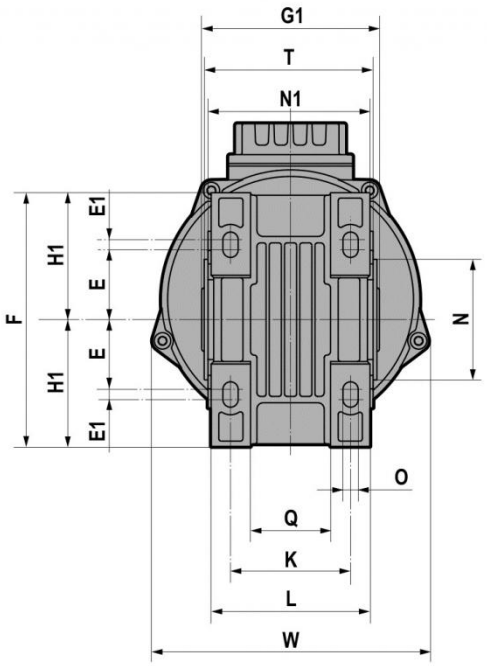

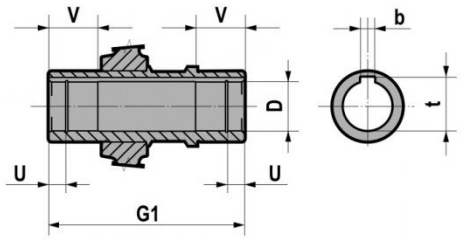

	D H7	b	t	U	V	E	E1	F	G	G1	H	H1	I	J	K	L	M	N	N1	O	O1	P	Q	R	S	T	W
CBA42	20	6	22,8	/	30	45	/	130	95	100	65	65	8	45	73,5	90	85	70	92	9	M8x12 n.4	100	45	127,5	8	97	152
CBA52	25	8	28,3	/	30	55	/	160	98	112	80	80	4,2	45	80	100	95	80	102	9	M8x14 n.6	110	51	153	10	108	152
	28	8	31,1																								
CBA72	35	10	38,3	12	35	55	8	200	129,5	140	90	100	16	45	94,5	125	115	95	130	12	M8x14 n.7	136	63	175	12	136	218
	30	8	33,3																								

T (IE1 - IE2)								
		063	071	080	090S	090L	100	112
CBA42 CBA52	X	180	205	223	237	262	/	/
	Y	121	139	158	173	173	/	/
	Z	104	112	122	130	130	/	/
CBA72	X	/	/	218	232	257	290	302
	Y	/	/	158	173	173	191	211
	Z	/	/	122	130	130	139	154

TB (IE1 - IE2)								
		063	071	080	090S	090L	100	112
CBA42 CBA52	X	238	270,5	294	313	338	/	/
	Y	121	139	158	173	173	/	/
	Z	119	129	137	157	157	/	/
CBA72	X	/	/	290	309	334	372	400
	Y	/	/	158	173	173	191	211
	Z	/	/	137	157	157	168	183

3.1.4 CBA.3

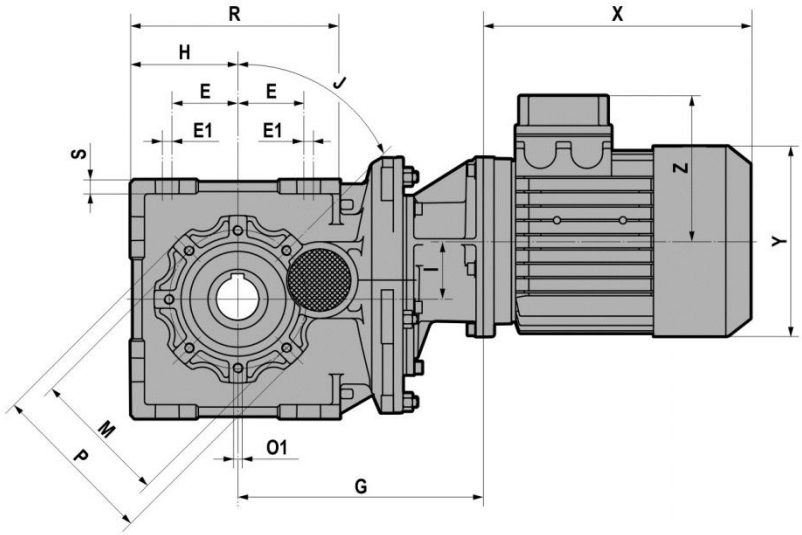

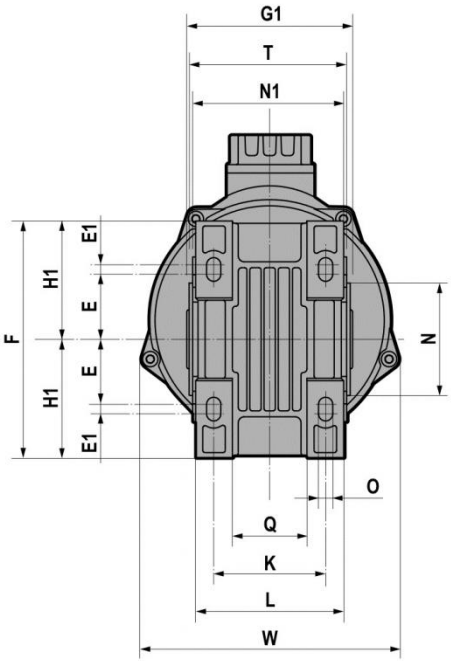

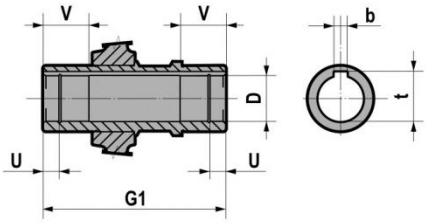

	D H7	b	t	U	V	E	E1	F	G	G1	H	H1	I	J	K	L	M	N	N1	O	O1	P	Q	R	S	T	W
CBA53	25	8	28,3	/	30	55	/	160	162	112	80	80	36,2	45	80	100	95	80	102	9	M8x14 n.6	110	51	153	10	108	152
	28	8	31,1																								
CBA73	35	10	38,3	12	35	55	8	200	204,5	140	90	100	48	45	94,5	125	115	95	130	12	M8x14 n.7	136	63	175	12	136	218
	30	8	33,3																								

T (IE1 - IE2)						
		063	071	080	090S	090L
CBA53 CBA73	X	180	205	223	237	262
	Y	121	139	158	173	173
	Z	104	112	122	130	130

TB (IE1 - IE2)						
		063	071	080	090S	090L
CBA53 CBA73	X	238	270,5	294	313	338
	Y	121	139	158	173	173
	Z	119	129	137	157	157

3.1.5 IBA.2

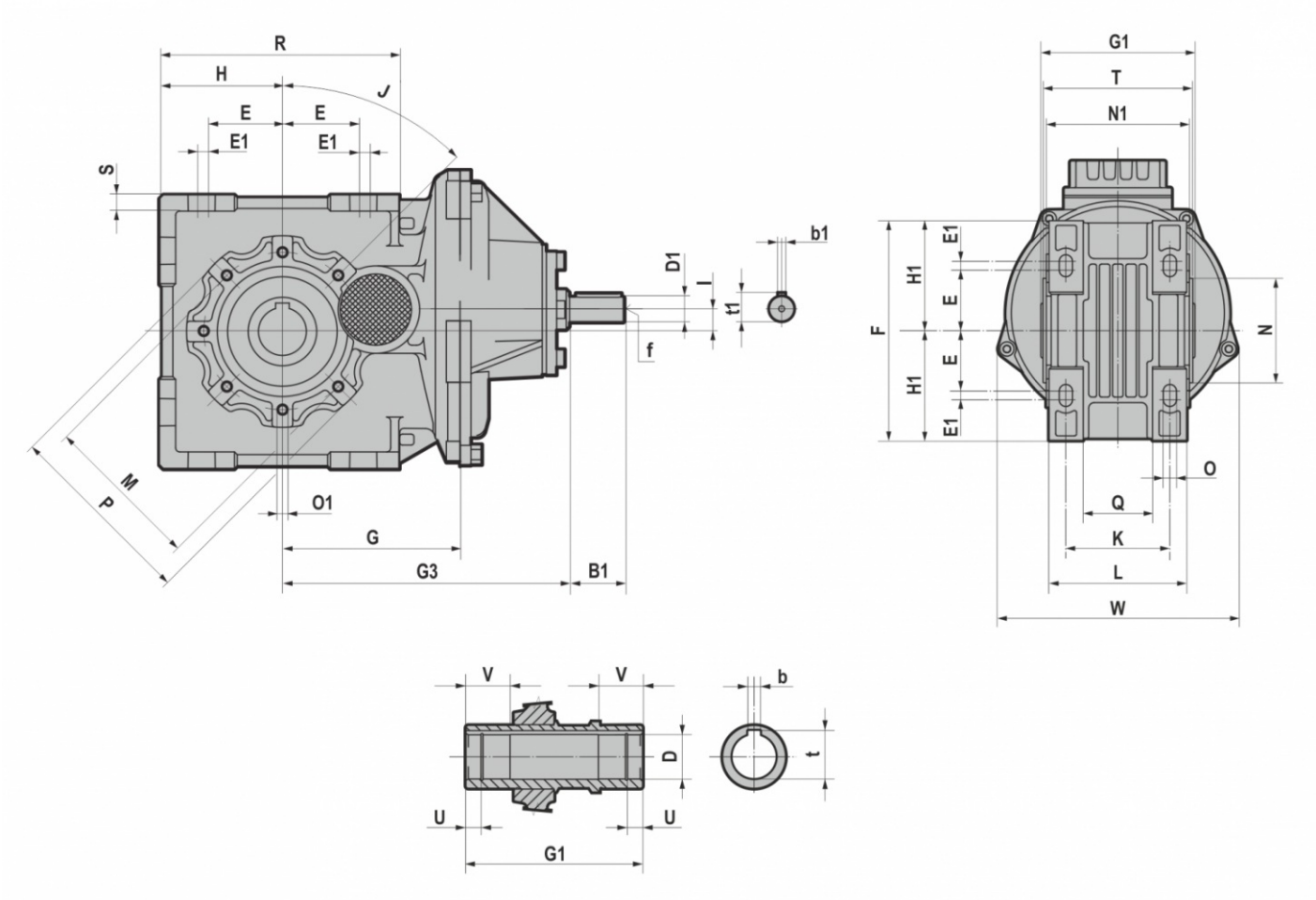

	D H7	b	t	U	V	E	E1	F	G	G1	H	H1	I	J	K	L	M	N	N1	O	O1	P	Q	R	S	T	W
IBA42	20	6	22,8	/	30	45	/	130	95	100	65	65	8	45	73,5	90	85	70	92	9	M8x12 n.4	100	45	127,5	8	97	152
IBA52	25	8	28,3	/	30	55	/	160	98	112	80	80	4,2	45	80	100	95	80	102	9	M8x14 n.6	110	51	153	10	108	152
	28	8	31,1																								
IBA72	35	10	38,3	12	35	55	8	200	129,5	140	90	100	16	45	94,5	125	115	95	130	12	M8x14 n.7	136	63	175	12	136	218
	30	8	33,3																								

	G3	D1	B1	b1	t1	f
IBA42	175,5	16	40	5	18	M6
IBA52	179	16	40	5	18	M6
IBA72	210	19	40	6	21,5	M6

3.1.6 IBA.3

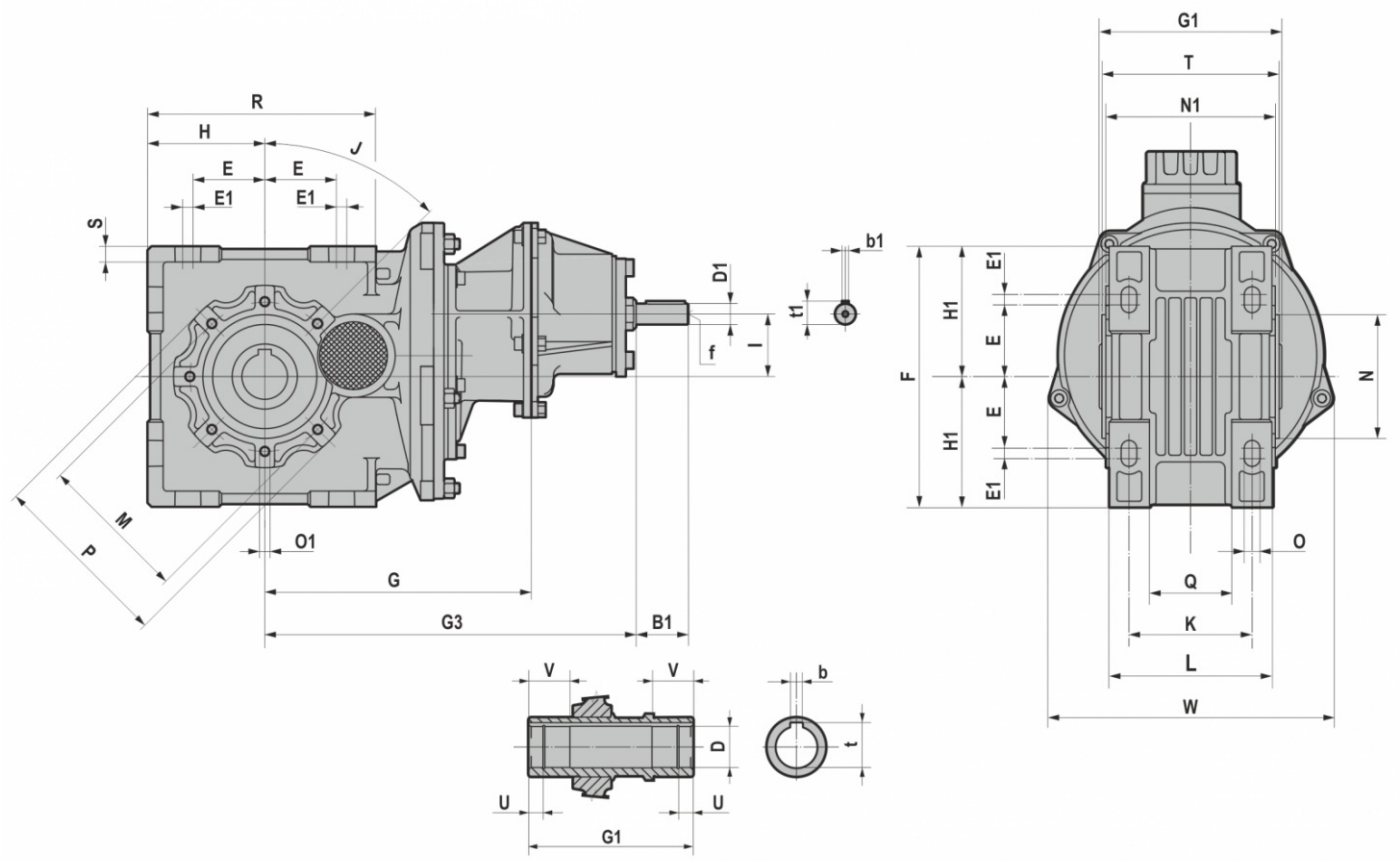

	D H7	b	t	U	V	E	E1	F	G	G1	H	H1	I	J	K	L	M	N	N1	O	O1	P	Q	R	S	T	W
IBA53	25	8	28,3	/	30	55	/	160	162	112	80	80	36,2	45	80	100	95	80	102	9	M8x14 n.6	110	51	153	10	108	152
	28	8	31,1																								
IBA73	35	10	38,3	12	35	55	8	200	204,5	140	90	100	48	45	94,5	125	115	95	130	12	M8x14 n.7	136	63	175	12	136	218
	30	8	33,3																								

	G3	D1	B1	b1	t1	f
IBA53	242,5	16	40	5	18	M6
IBA73	285	16	40	5	18	M6

3.1.7 B

B...F

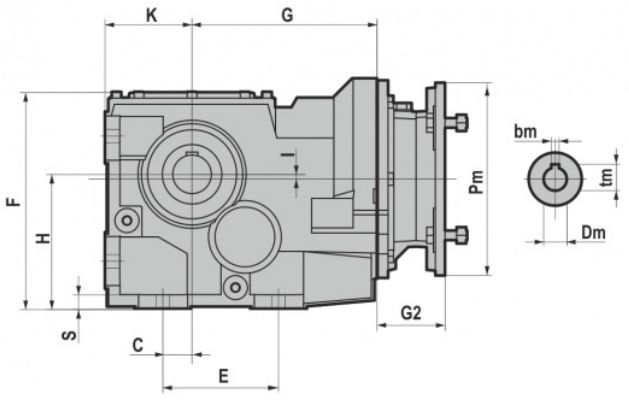
K
G
F
H
S
C
E
I
Pm
G2
bm
tm
Dm

B...S

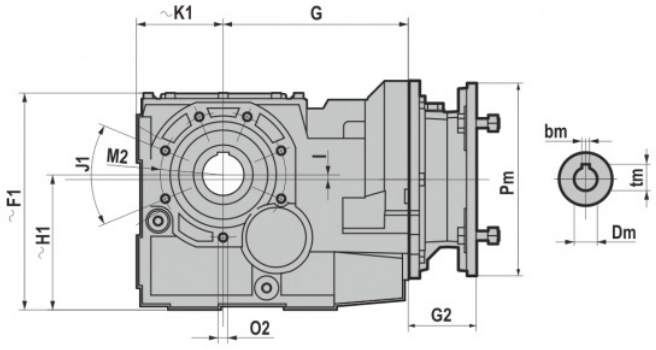
~K1
G
~F1
~H1
J1
M2
I
Pm
O2
G2
bm
tm
Dm

B...U

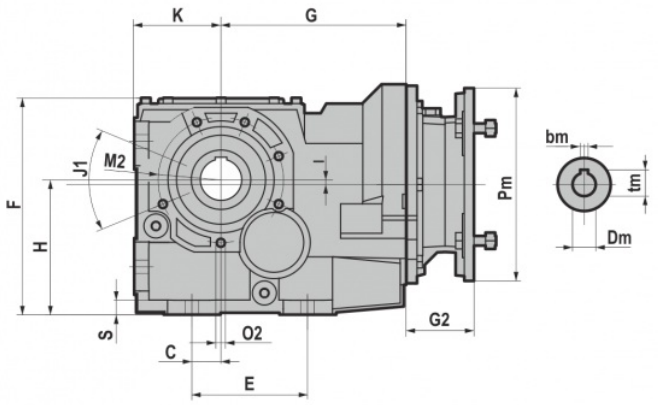
K
G
F
H
J1
M2
S
C
O2
E
I
Pm
G2
bm
tm
Dm

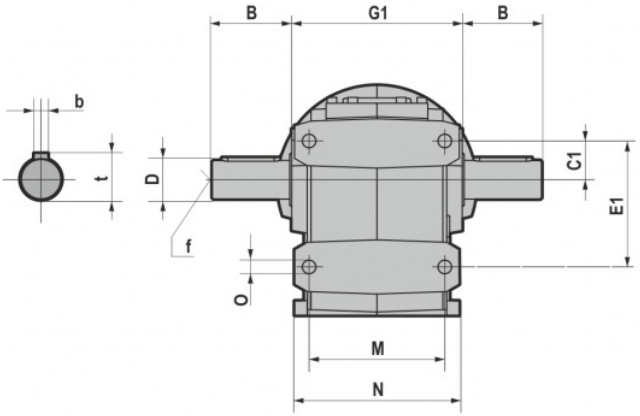
b
t
B
G1
B
D
f
O
C1
E1
M
N

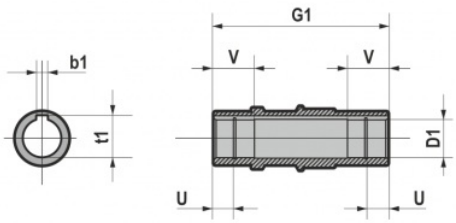
b1
t1
G1
V
V
D1
U
U

3.1 REDUCERS/GEARED MOTORS

	D1 H7	b1	t1	U	V	B	D	b	t	f	C	C1	E	E1	F	F1
B063	35	10	38,3	12	35	58	35 k6	10	38	M12	30	39	130	126	215	219,5
	40	12	43,3													
B083	40	12	43,3	22,25	42	80	40 k6	12	43	M16	30	40	120	130	225	225
	45	14	47,6													
B103	45	14	48,8	22,25	50	100	50 k6	14	53,5	M16	40	50	150	160	283	283
	50	14	53,8	25												
B123	60	18	64,4	28	70	120	60 m6	18	64	M20	55	78	180	220	341	342
B143	70	20	74,9	27,5	75	140	70 m6	20	74,5	M20	75	90	240	280	414	/
B153	90	25	95,4	34	90	170	90 m6	25	95	M20	95	110	280	330	490	/
	80	22	85,4													
B163	100	28	106,4	40	100	210	110 m6	28	116	M20	115	155	350	420	615	/

	G	G1	H	H1	I	K	K1	M	N	O	S	J1	M2	O2
B063	174	140	132	137	33	88	92,5	104	126	14	12	45	130	M10x20 (n.6)
B083	192	180	140	140	5	90	90	140	170	14	15	45	130	M10x20 (n.6/7)
B103	213,5	210	180	180	25	112	112	165	205	18	18	45	165	M12x22 (n.6/7)
B123	246	240	212	213	33,5	132	133	180	230	22	22	45	185	M14x28 (n.7)
B143	279	300	265	/	34	160	/	240	290	22	22	45	200	M14x30 (n.7)
B153	353	350	315	/	35	200	/	270	330	26	26	45	245	M16x32 (n.7)
B163	426,5	445	375	/	47	230,5	/	330	400	38	45	45	298	M18x40 (n.6)

		G2				
IEC	Pm x Dm	B063	B083-B103	B123-B143	B153	B163
063	**140x11**	57	/	/	/	/
071	**160x14**	69,0	/	/	/	/
080	**200x19**	90,0	70,0	60,5	/	/
090	**200x24**	90,0	70,0	60,5	/	/
100-112	**250x28**	105,0	85,0	75,5	/	/
132	**300x38**	/	110,0	100,5	76,0	/
160	**350x42**	/	157,5	148,0	123,5	109,0
180	**350x48**	/	157,5	148,0	123,5	109,0
200	**400x55**	/	/	185,0	160,5	146,0
225	**450x60**	/	/	/	160,5	146,0
250	**550*65**	/	/	/	/	175,0
280	**550*75**	/	/	/	/	175,0

B5	Pm	Dm	bm	tm
063	140	11	4	12,8
071	160	14	5	16,3
080	200	19	6	21,8
090	200	24	8	27,3
100	250	28	8	31,3
112	250	28	8	31,3
132	300	38	10	41,3
160	350	42	12	45,3
180	350	48	14	51,8
200	400	55	16	59,3
225	450	60	18	64,4
250	550	65	18	69,4
280	550	75	20	79,9

3.1.8 CB

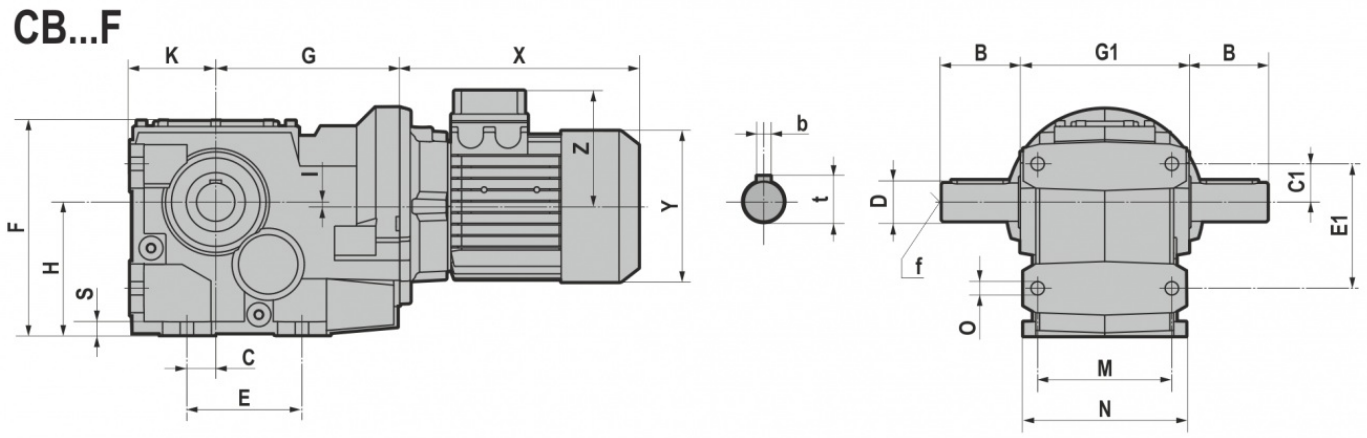
CB...F
K
G
X
F
H
S
I
Z
Y
C
E
b
t
B
G1
B
D
f
O
M
N
C1
E1

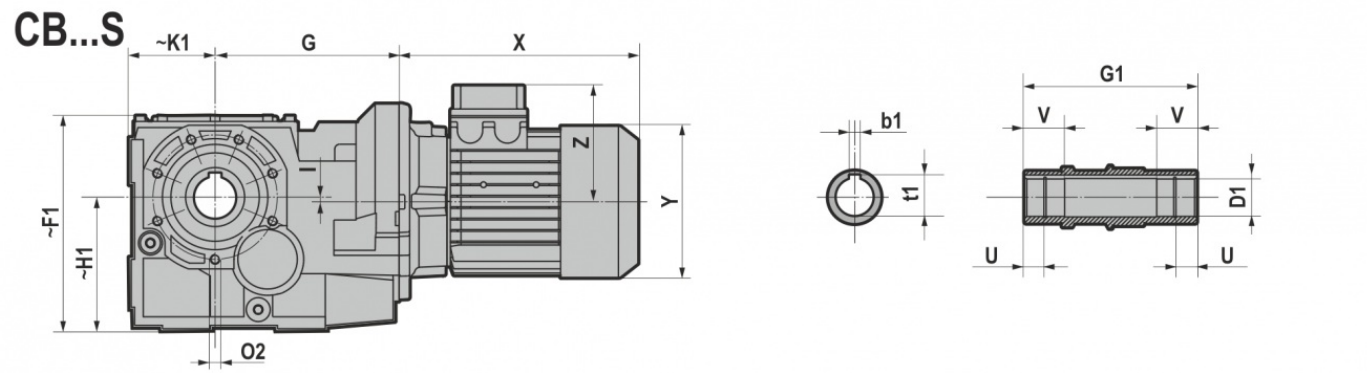
CB...S
~K1
G
X
~F1
~H1
I
Z
Y
O2
b1
t1
G1
V
V
D1
U
U

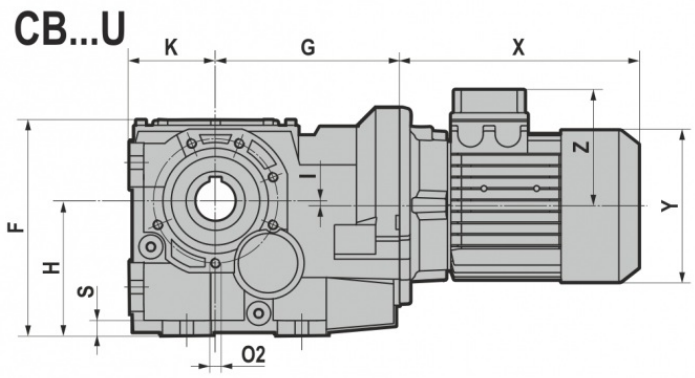
CB...U
K
G
X
F
H
S
I
Z
Y
O2

3.1 REDUCERS/GEARED MOTORS

	D1 H7	b1	t1	U	V	B	D	b	t	f	C	C1	E	E1	F	F1
CB063	35	10	38,3	12	35	58	35 k6	10	38	M12	30	39	130	126	215	219,5
	40	12	43,3													
CB083	40	12	43,3	22,25	42	80	40 k6	12	43	M16	30	40	120	130	225	225
	45	14	47,6													
CB103	45	14	48,8	22,25	50	100	50 k6	14	53,5	M16	40	50	150	160	283	283
	50	14	53,8	25												
CB123	60	18	64,4	28	70	120	60 m6	18	64	M20	55	78	180	220	341	342
CB143	70	20	74,9	27,5	75	140	70 m6	20	74,5	M20	75	90	240	280	414	/
CB153	90	25	95,4	34	90	170	90 m6	25	95	M20	95	110	280	330	490	/
	80	22	85,4													
CB163	100	28	106,4	40	100	210	110 m6	28	116	M20	115	155	350	420	615	/

	G	G1	H	H1	I	K	K1	M	N	O	S	J1	M2	O2
CB063	174	140	132	137	33	88	92,5	104	126	14	12	45	130	M10x20 (n.6)
CB083	192	180	140	140	5	90	90	140	170	14	15	45	130	M10x20 (n.6/7)
CB103	213,5	210	180	180	25	112	112	165	205	18	18	45	165	M12x22 (n.6/7)
CB123	246	240	212	213	33,5	132	133	180	230	22	22	45	185	M14x28 (n.7)
CB143	279	300	265	/	34	160	/	240	290	22	22	45	200	M14x30 (n.7)
CB153	353	350	315	/	35	200	/	270	330	26	26	45	245	M16x32 (n.7)
CB163	426,5	445	375	/	47	230,5	/	330	400	38	45	45	298	M18x40 (n.6)

T (IE1 - IE2)										
		063	071	080	090S	090L	100	112	132S	132M
CB063	X	215	241	268	296	321	333	351	/	/
	Y	121	139	158	173	173	191	211	/	/
	Z	104	112	122	130	130	139	154	/	/
CB083 CB103	X	/	221	248	276	301	335	356	405	443
	Y	/	139	158	173	173	191	211	249	249
	Z	/	112	122	130	130	139	154	194	194
CB123 CB143	X	/	/	/	267	292	326	347	396	434
	Y	/	/	/	173	173	191	211	249	249
	Z	/	/	/	130	130	139	154	194	194

TB (IE1 - IE2)										
		063	071	080	090S	090L	100	112	132S	132M
CB063	X	273	307	341	373	398	415	448	/	/
	Y	121	139	158	173	173	191	211	/	/
	Z	119	129	137	157	157	168	183	/	/
CB083 CB103	X	/	287	321	353	378	417	453	505	547
	Y	/	139	158	173	173	191	211	249	249
	Z	/	129	137	157	157	168	183	230	230
CB123 CB143	X	/	/	/	343	368	407	443	495	537
	Y	/	/	/	173	173	191	211	249	249
	Z	/	/	/	157	157	168	183	230	230

3.1.9 IB

IB...F

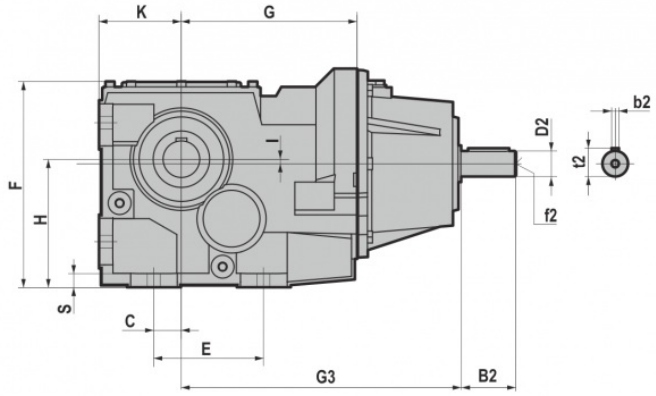

IB...S

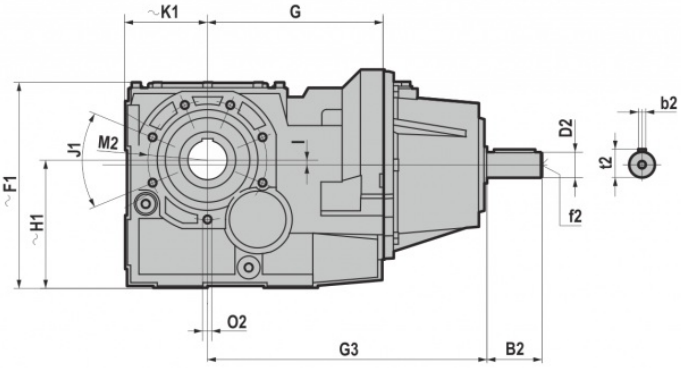

IB...U

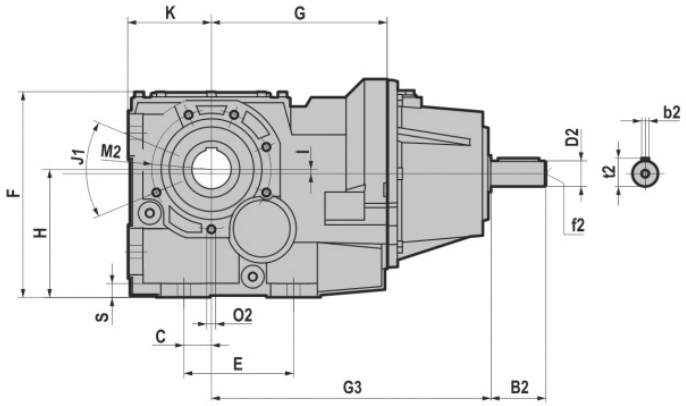

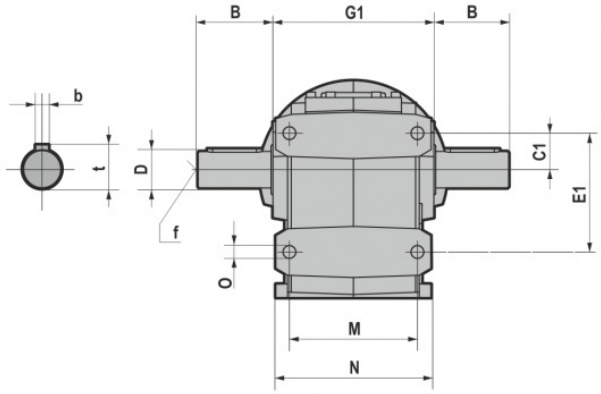

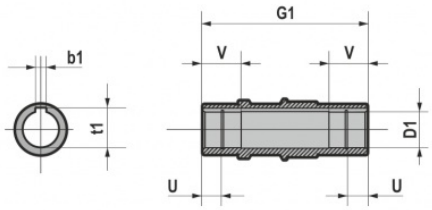

3.1 REDUCERS/GEARED MOTORS

	D1 H7	b1	t1	U	V	B	D	b	t	f	C	C1	E	E1	F	F1
IB063	35	10	38,3	12	35	58	35 k6	10	38	M12	30	39	130	126	215	219,5
	40	12	43,3													
IB083	40	12	43,3	22,25	42	80	40 k6	12	43	M16	30	40	120	130	225	225
	45	14	47,6													
IB103	45	14	48,8	22,25	50	100	50 k6	14	53,5	M16	40	50	150	160	283	283
	50	14	53,8	25												
IB123	60	18	64,4	28	70	120	60 m6	18	64	M20	55	78	180	220	341	342
IB143	70	20	74,9	27,5	75	140	70 m6	20	74,5	M20	75	90	240	280	414	/
IB153	90	25	95,4	34	90	170	90 m6	25	95	M20	95	110	280	330	490	/
	80	22	85,4													
IB163	100	28	106,4	40	100	210	110 m6	28	116	M20	115	155	350	420	615	/

	G	G1	H	H1	I	K	K1	M	N	O	S	J1	M2	O2
IB063	174	140	132	137	33	88	92,5	104	126	14	12	45	130	M10x20 (n.6)
IB083	192	180	140	140	5	90	90	140	170	14	15	45	130	M10x20 (n.6/7)
IB103	213,5	210	180	180	25	112	112	165	205	18	18	45	165	M12x22 (n.6/7)
IB123	246	240	212	213	33,5	132	133	180	230	22	22	45	185	M14x28 (n.7)
IB143	279	300	265	/	34	160	/	240	290	22	22	45	200	M14x30 (n.7)
IB153	353	350	315	/	35	200	/	270	330	26	26	45	245	M16x32 (n.7)
IB163	426,5	445	375	/	47	230,5	/	330	400	38	45	45	298	M18x40 (n.6)

	G3	B2	D2	b2	t2	f2
IB063	264	50	24 j6	8	27	M8
IB083	305	60	28 j6	8	31	M10
IB103	326,5	60	28 j6	8	31	M10
IB123	372,5	80	38 k6	10	41	M12
IB143	405,5	80	38 k6	10	41	M12
IB153	493	110	42 k6	12	45	M16
IB163	561,5	110	48 k6	14	51,5	M16

3.2.1 Electric motors

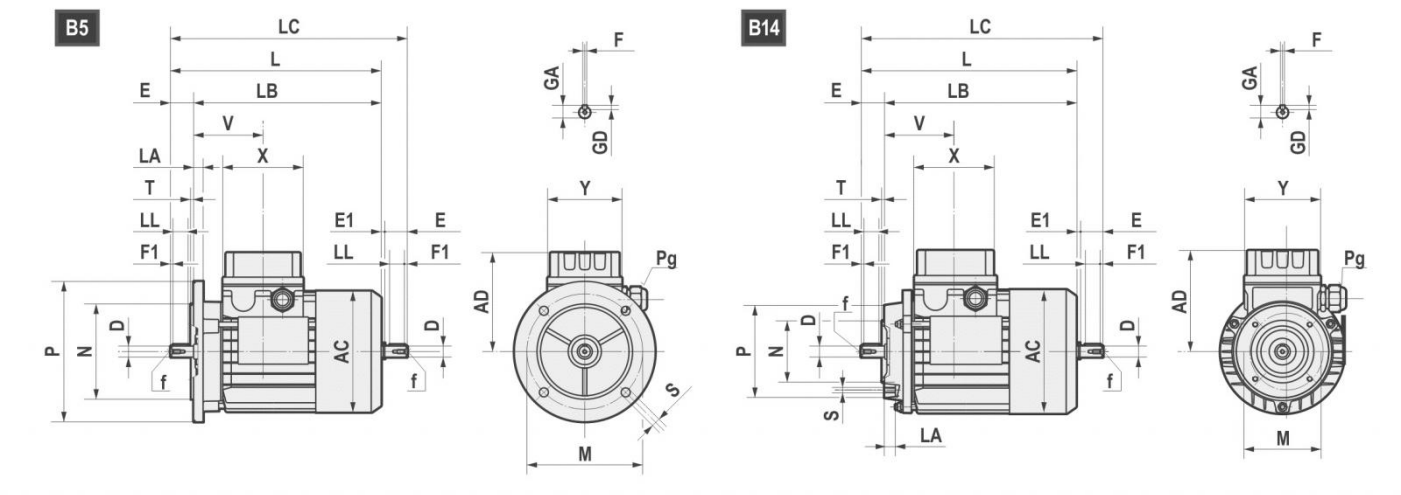

	AC	AD	L	LB	LC	X	Y	V	D	E	E1	f	F1	GA	F	GD
063	121	104	211	188	235,5	80	74	69	11 j6	23	1,5	M4x10	2,5	12,5	4	4
071	139	112	238,5	208,5	271	80	74	74,5	14 j6	30	2,5	M5x12.5	3	16	5	5
080	158	122	272,5 *(296)	232,5 *(256)	314 *(337)	80	74	78	19 j6	40	1,5	M6x16	5	21,5	6	6
90S	173	146	298 *(331)	248 *(281)	349,5 *(381)	98	98	89,5	24 j6	50	1,5	M8x19	5	27	8	7
90L	173	146	323 *(356)	273 *(306)	374,5 *(408)	98	98	89,5	24 j6	50	1,5	M8x19	5	27	8	7
100	191	155	368	308	431,5	98	98	97,5	28 j6	60	3,5	M10x22	7,5	31	8	7
112	211	170	382,5 *(408)	322,5 *(348)	447 *(472)	98	98	100	28 j6	60	3,5	M10x22	7,5	31	8	7
132S	249	195	452	372	536,5	118	118	115,5	38 k6	80	4	M12x28	10	41	10	8
132L	249	195	490	410	574,5	118	118	115,5	38 k6	80	4	M12x28	10	41	10	8
160S	249	195	520	410	/	118	118	115,5	42k6	100	/	M16x36	10	45	12	8

*TP80B4,TP90S4, TP90L4, TP90S6, TP112M4, TP112M6

B5	M	N	P	LA	S	T
063	115	95	140	10	9	3
071	130	110	160	10	9,5	3,5
080	165	130	200	12	11	3,5
090	165	130	200	12	11	3,5
100	215	180	250	15	14	4
112	215	180	250	14,5	14	4
132	265	230	300	20	14	3,5
160	300	250	350	13	18,5	3,5

B14	M	N	P	LA	S	T
063	75	60	90	10	M5	2,5
071	85	70	105	10,5	M6	2,5
080	100	80	120	10,5	M6	3
090	115	95	140	11,5	M8	3
100	130	110	160	15	M8	3,5
112	130	110	160	11,5	M8	3,5
132	165	130	200	20,5	M10	3,5
160	215	180	250	-	M12	4

3.2 ELECTRIC MOTORS

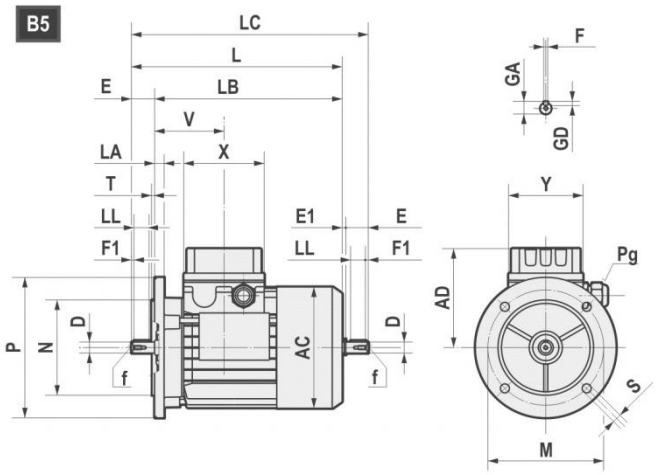

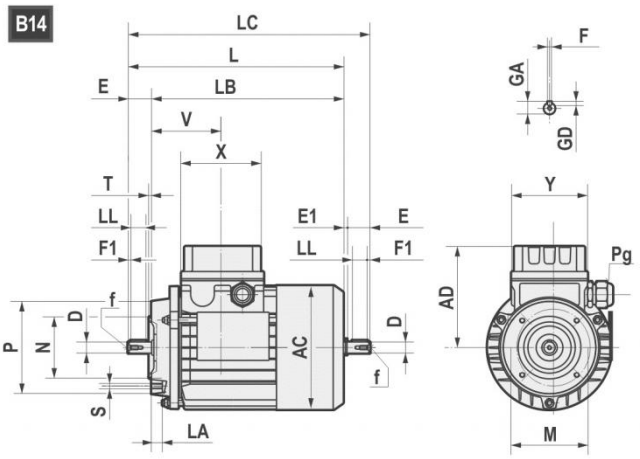

		AC	AD	L	LB	X	D	E	f	GA	F	GD	LL	Pg	
160M	2-4-6	314	251	600	490	158	42	110	M16	45	12	8	90	2-M40x1,5	1-M16x1,5
160L	2-4-6	314	251	645	535	158	42	110	M16	45	12	8	90	2-M40x1,5	1-M16x1,5
180M	2-4	355	267	680	570	158	48	110	M16	51,5	14	9	100	2-M40x1,5	1-M16x1,5
180L	4-6	355	267	720	610	158	48	110	M16	51,5	14	9	100	2-M40x1,5	1-M16x1,5
200L	2-4-6	397	300	785	675	187	55	110	M20	59	16	10	100	2-M50x1,5	1-M16x1,5
225S	4	446	325	820	680	187	60	140	M20	64	18	11	125	2-M50x1,5	1-M16x1,5
225M	2	446	325	815	705	187	55	110	M20	59	16	10	100	2-M50x1,5	1-M16x1,5
225M	4-6	446	325	845	705	187	60	140	M20	64	18	11	125	2-M50x1,5	1-M16x1,5
250M	2-4-6	485	360	910	770	238	60	140	M20	64	18	11	125	2-M63x1,5	1-M16x1,5
250M	2-4-6	485	360	910	770	238	65	140	M20	69	18	11	125	2-M63x1,5	1-M16x1,5
280S	2-4-6	547	390	970	830	238	65	140	M20	69	18	11	125	2-M63x1,5	1-M16x1,5
280S	2-4-6	547	390	970	830	238	75	140	M20	79,5	20	12	125	2-M63x1,5	1-M16x1,5
280M	2-4-6	547	390	1025	885	238	65	140	M20	69	18	11	125	2-M63x1,5	1-M16x1,5
280M	2-4-6	547	390	1025	885	238	75	140	M20	79,5	20	12	125	2-M63x1,5	1-M16x1,5

B5	M	N	P	LA	S	T
160	300	250	350	13	19	5
180	300	250	350	15	19	5
200	350	300	400	17	19	5
225	400	350	450	20	19	5
250	500	450	550	22	19	5
280	500	450	550	22	19	5

3.2.2 Standard high efficiency (TS), high (TH) and premium (TP) motors

Motovario, three-phase, single polarity motors are available in three different versions (IE1-IE2-IE3) in compliance with standard 60034-30-1 (see table). The efficiency value is calculated according to the method set forth in standard IEC 60034-2-1.

1. IE1: Standard efficiency TS series.
2. IE2: High efficiency TH series
3. IE3: Premium efficiency TP series.

Table of Motovario commercial availability

		EFFICIENCY LEVEL		
NOMINAL POWER [kW]	POLES	IE1	IE2	IE3
0,09 ≤ Pn < 0,75	2 - 4 - 6	TS-TBS	-	-
0,75 ≤ Pn ≤ 11	2 - 4	TBS	-	-
0,75 ≤ Pn ≤ 5,5	6	TBS	TH-TBH	TP-TBP
0,75 ≤ Pn ≤ 9,2	2 - 4	-	TH-TBH	-
0,75 ≤ Pn ≤ 7,5	2 - 4	-	-	TP-TBP
11 ≤ Pn ≤ 37	2	TBS (*)	-	TP
11 ≤ Pn ≤ 55	4	TBS (*)	-	-
11 ≤ Pn ≤ 90	4	-	-	TP
7,5 ≤ Pn ≤ 22	6	TBS (*)	-	TP

(*) Series available on request.

3.2.3 Nominal power - [kW]

	63A	63B	63C	71A	71B	71C	80A			80B		
Poles	TS	TS	TS	TS	TS	TS	TS	TH	TP	TS	TH	TP
2	0,18	0,25	0,37	0,37	0,55	-	-	0,75	0,75	-	1,1	1,1
4	0,12	0,18	0,22	0,25	0,37	0,55	0,55	-	-	-	0,75	0,75
6	0,09	0,12	0,15	0,18	0,25	0,37	0,37	-	-	0,55	-	-

	90S		90L		100LR	100L	100LA		112MR	112MS	112MA	112M
Poles	TH	TP	TH	TP	TP	TP	TH	TP	TP	TP	TH	TP
2	1,5	1,5	2,2	2,2	-	3	3	-	-	-	4	4
4	1,1	1,1	1,5	1,5	-	-	2,2	2,2	2,2	3	4	4
6	-	0,75	0,75	-	1,1	1,5	1,1	-	-	-	2,2	2,2

	112MR	112MS	132S	132SA	132MS	132SB	132M	132MA		132MB	
Poles	TP	TP	TP	TH	TP	TH	TP	TH	TP	TH	TP
2	-	-	5,5	5,5	-	7,5	7,5	9,2	-	-	-
4	2,2	3	-	5,5	5,5	-	7,5	7,5	-	-	-
6	-	-	3	3	-	-	-	4	4	5,5	5,5

	160M	160MA	160MB	160L	160LA	180M	180L
Poles	TP	TP	TP	TP	TP	TP	TP
2	-	11	15	18,5	-	22	-
4	-	11	-	-	15	18,5	22
6	7,5	-	-	11	-	-	15

	200L	200LA	200LB	225S	225M	250M	280S	280M
Poles	TP	TP	TP	TP	TP	TP	TP	TP
2	-	30	37	-	-	-	-	-
4	30	-	-	37	45	55	75	90
6	-	18,5	22	-	-	-	-	-

3.3 WEIGHT

The values reported in the tables are referred to the weight of the gearbox with lubricant excluded.

* B-PB	063	071	080-090	100-112	132	160-180	200	225	250	280	
A42	4,8	4,9	5,1	/	/	/	/	/	/	/	~ kg
A52	5,4	5,5	5,7	/	/	/	/	/	/	/	
A53	7,0	7,1	8,5	/	/	/	/	/	/	/	
A72	/	/	15,3	15,5	/	/	/	/	/	/	
A73	14.2	14,3	15,7	/	/	/	/	/	/	/	
063	20,6	21	21,6	25,9	/	/	/	/	/	/	
083	/	/	29,3	31,3	33,8	/	/	/	/	/	
103	/	/	54,8	56,8	59,5	66,2	/	/	/	/	
123	/	/	76,6	79	81,7	87,7	/	/	/	/	
143	/	/	/	124	127	133	148	/	/	/	
153	/	/	/	/	199	206,5	221	223	/	/	
163	/	/	/	/	/	385,3	449,8	457,1	473,5	473,5	

IB	~ kg
A42	4,8
A52	5,4
A53	8,2
A72	15,4
A73	15,4
063	23,7
083	33,1
103	58,8
123	86,5
143	132
153	213
163	455,6

*Weight without motor

	TS									
CB	063	071	080	090S	090L	100	112	132S	132M	
A42	7,4	9,3	13,3	/	/	/	/	/	/	~ kg
A52	8,2	10,2	14,2	16,1	18,6	/	/	/	/	
A53	9,7	11,7	15,7	17,6	20,1	/	/	/	/	
A72	/	/	21,6	23,6	26,1	34,6	41,6	/	/	
A73	16,9	18,9	22,9	24,9	27,4	/	/	/	/	
063	24,1	25	29,7	33,6	35,6	41,1	52,6	/	/	
083	/	/	35,7	38,1	39,6	44,7	56,1	70,1	81,7	
103	/	/	61,4	63,8	65,3	70,4	81,8	95,8	107,4	
123	/	/	/	85,7	86,7	92,7	102,7	117,7	126,7	
143	/	/	/	/	/	138	148	163	172	

	TH							
CB	080	090S	090L	100	112	132S	132M	
A42	15,0	/	/	/	/	/	/	~ kg
A52	15,9	18,4	20,6	/	/	/	/	
A53	17,4	19,9	22,1	/	/	/	/	
A72	23,3	25,9	28,1	36,9	44,7	/	/	
A73	24,6	27,2	29,4	/	/	/	/	
063	31,4	35,9	37,6	43,4	55,7	/	/	
083	37,4	40,4	41,6	47,0	59,2	75,4	88,5	
103	63,1	66,1	67,3	72,7	84,9	101,1	114,2	
123	/	88,0	88,7	95,0	105,8	123,0	133,5	
143	/	/	/	140,3	151,1	168,3	178,8	

	TBS									
CB	063	071	080	090S	090L	100	112	132S	132M	
A42	8,8	11,3	16,4	/	/	/	/	/	/	~ kg
A52	9,6	12,1	17,3	20,9	13,5	/	/	/	/	
A53	11,1	13,6	18,8	22,4	25	/	/	/	/	
A72	/	/	25,6	27,1	31,6	41,6	51,6	/	/	
A73	18,4	20,9	26,9	28,9	32,9	/	/	/	/	
063	25,6	27,2	33,2	39,1	41,1	46,6	62,3	/	/	
083	/	/	39,2	43,6	45,1	50,2	65,8	80,3	96,3	
103	/	/	64,8	69,3	70,8	75,8	91,5	106,1	122,1	
123	/	/	/	91,2	92,2	98,2	112,4	128	141,4	
143	/	/	/	/	/	143,5	158	173	187	

	TBH							
CB	080	090S	090L	100	112	132S	132M	
A42	18,1	/	/	/	/	/	/	~ kg
A52	19,0	23,2	15,5	/	/	/	/	
A53	20,5	24,7	27,0	/	/	/	/	
A72	27,3	29,4	33,6	45,3	54,7	/	/	
A73	28,6	31,2	34,9	/	/	/	/	
063	34,9	41,4	43,1	50,3	65,4	/	/	
083	40,9	45,9	47,1	53,9	68,9	85,6	102,8	
103	66,5	71,6	72,8	79,5	94,6	111,4	128,6	
123	/	93,5	94,2	101,9	115,5	133,3	147,9	
143	/	/	/	147,2	161,1	178,3	193,5	

3.4 END SHAFT

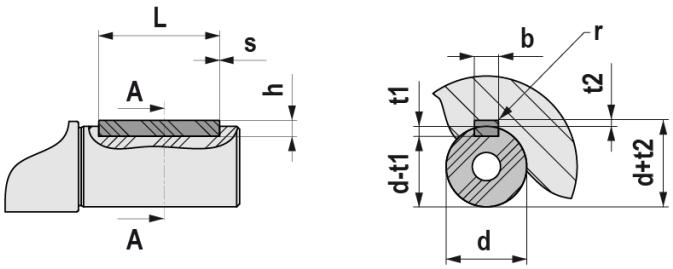

UNI 6604 - DIN 6885															
d			b x h			Tol. b / h	L		s min / max	b	t1	t2	Tol. t1 / t2	r max
	6	8	2	×	2	h9 / h9	6	20	0,16 0,25	2	1,2	1	0,1 0	0,08 0,16
>	8	10	3	×	3		6	36		3	1,8	1,4		
>	10	12	4	×	4		8	45		4	2,5	1,8		
>	12	17	5	×	5		10	56	0,25 0,4	5	3	2,3		0,16 0,25
>	17	22	6	×	6		14	70		6	3	2,8		
>	22	30	8	×	7	h9 / h11	18	90		8	4	3,3	0,2 0	
>	30	38	10	×	8		22	110	0,4 0,6	10	5	3,3		0,25 0,4
>	38	44	12	×	8		28	140		12	5	3,3		
>	44	50	14	×	9		36	160		14	5,5	3,8		
>	50	58	16	×	10		45	180		16	6	4,3		
>	58	65	18	×	11		50	200		18	7	4,4		
>	65	75	20	×	12		56	110	0,6 0,8	20	7,5	4,9		0,4 0,6
>	75	85	22	×	14		63	140		22	9	5,4		
>	85	95	25	×	14		70	160		25	9	5,4		
>	95	110	28	×	16		80	180		28	10	6,4		
>	110	130	32	×	18		90	200		32	11	7,4		
>	130	150	36	×	20		100	160	1 1,2	36	12	8,4	0,3 0	0,7 1
>	150	170	40	×	22		110	180		40	13	9,4		
>	170	200	45	×	25		125	200		45	14	10,4		

4.1 LOW SPEED SHAFTS

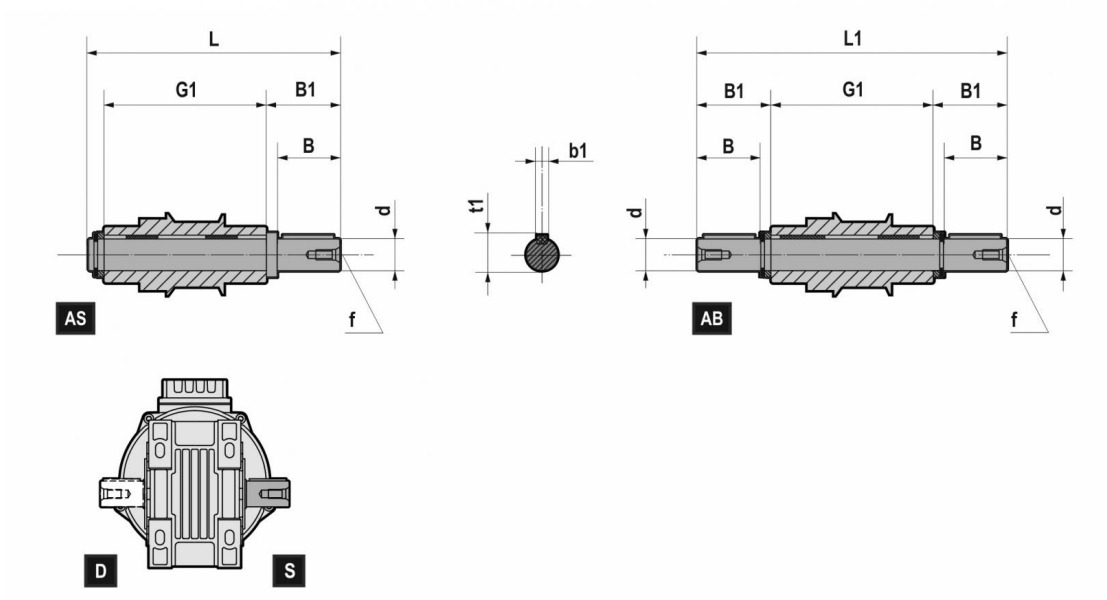

BA70 solid shaft

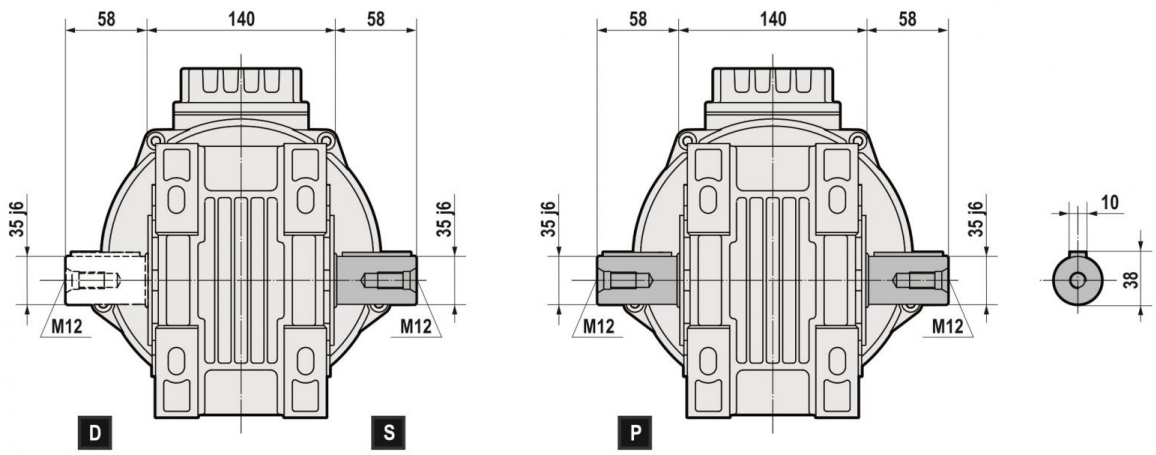

	d h6	B	B1	G1	L	L1	f	b1	t1
BA42	20	40	43,5	100	151	187	M6	6	22,5
BA52-BA53	25	50	53,5	112	173	219	M10	8	28
B063	35	58	62	140	210,5	264	M12	10	38
B083	40	80	84,25	180	273	348,5	M16	12	43
B103	50	100	105	210	325	420	M16	14	53,5
B123	60	120	125	240	375	490	M20	18	64
B143	70	140	146	300	458	592	M20	20	74,5
B153	90	170	176,5	350	540	703	M20	25	95
B163	100	210	217,5	445	677	880	M20	28	106

4.2 OUTPUT FLANGE

4.2.1 BA

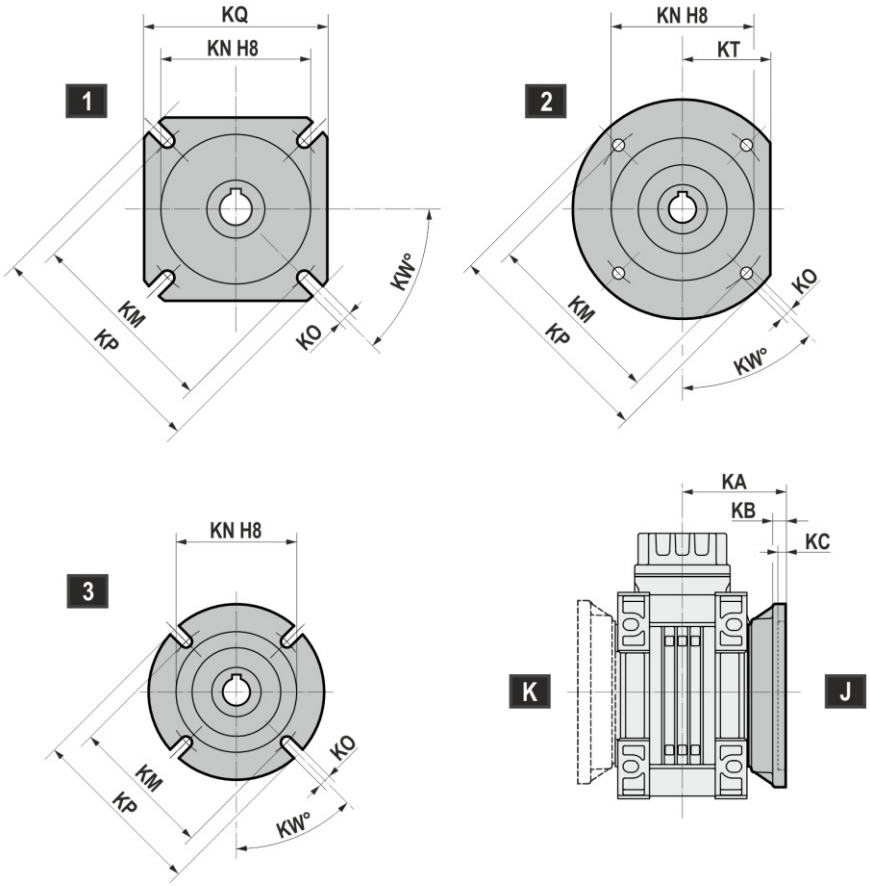

	A42	A52-A53	A72-A73
FA	1	1	1
FB	1	1	3
FC	2	2	-
FD	2	2	-

B..F-CB..F		KA	KB	KC	KN	KM	KO	KP	KQ	KT	KW
BA42	FA	92,5	9	5	70	90 min	11 (n°4)	125	110	-	45°
	FB	122,5	9	5	70	90 min	11 (n°4)	125	110	-	45°
	FC	91,5	10	5	110	130	9.5 (n°4)	160	-	66	45°
	FD	74,5	14,5	5	95	115	11 (n°4)	140	-	60	45°
BA52 BA53	FA	80	10	6	115	150	11 (n°4)	180	142	-	45°
	FB	110	10	6	115	150	11 (n°4)	180	142	-	45°
	FC	96	10	5	130	165	11 (n°4)	200	-	80	45°
	FD	105	10	5	130	165	11 (n°4)	200	-	-	45°
BA72 BA73	FA	119	13	6	130	165	14 (n°4)	200	170	-	45°
	FB	98	13	6	110	130	11 (n°4)	160	-	-	45°

Unless specified otherwise, the reduction unit is supplied with the accessorie in pos. J referred to position B3/B5.

4.2 OUTPUT FLANGE

4.2.2 B

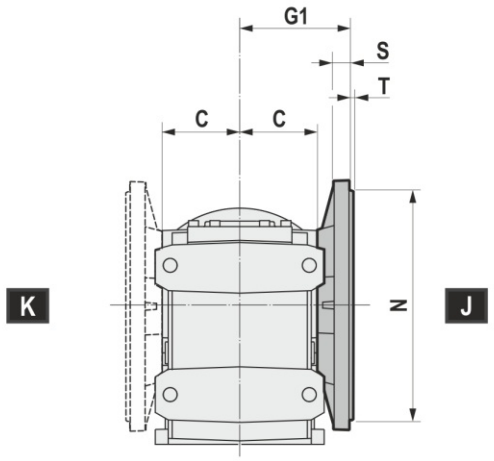

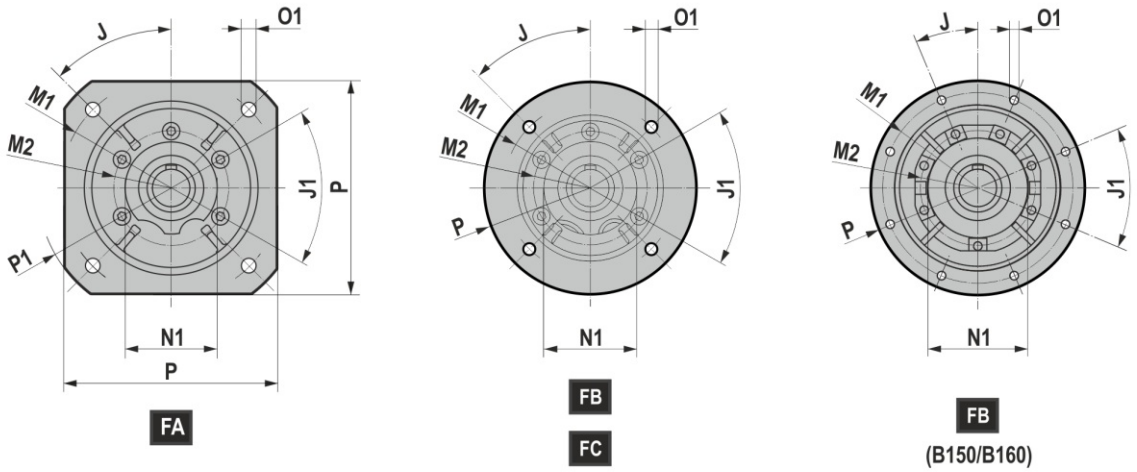

B..S - B..U		J	J1	M1	M2	N f8	N1	O1	P	P1	S	T	C	G1
B063	FA	45	45	265	130	230	110	14	250	300	15	4	61,5	93,5
	FB	45	45	215	130	180	110	14	250	/	15	4		
	FC	45	45	165	130	130	110	11	200	/	15	3,5		
B083	FA	45	45	265	130	230	110	14	250	300	15	4	78	110
	FB	45	45	215	130	180	110	14	250	/	15	4		
	FC	45	45	165	130	130	110	11	200	/	15	3,5		
B103	FA	45	45	300	165	250	130	18	300	350	16	5	95	135
	FB	45	45	265	165	230	130	14	300	/	16	4		
	FC	45	45	215	165	180	130	14	250	/	16	4		
B123	FA	45	45	350	185	300	150	18	350	400	18	5	107,5	150
	FB	45	45	300	185	250	150	18	350	/	18	5		
	FC	45	45	265	185	230	150	14	300	/	18	4		
B143	FB	45	45	350	200	300	170	18	400	/	18	5	138	187,5
B153	FB	22,5	45	400	245	350	210	18	450	/	25	5	162,5	207,5
	FC	45	45	350	245	300	210	18	400	/	25	5		
B163	FA	22,5	45	500	298	450	255	18	550	/	28	5	202,5	256

Unless specified otherwise, the reduction unit is supplied with the accessorie in pos. J referred to position B3/B5.

4.3 SHAFT MOUNTING FASTENING

4.3.1 Torque arm: BA Mounting position

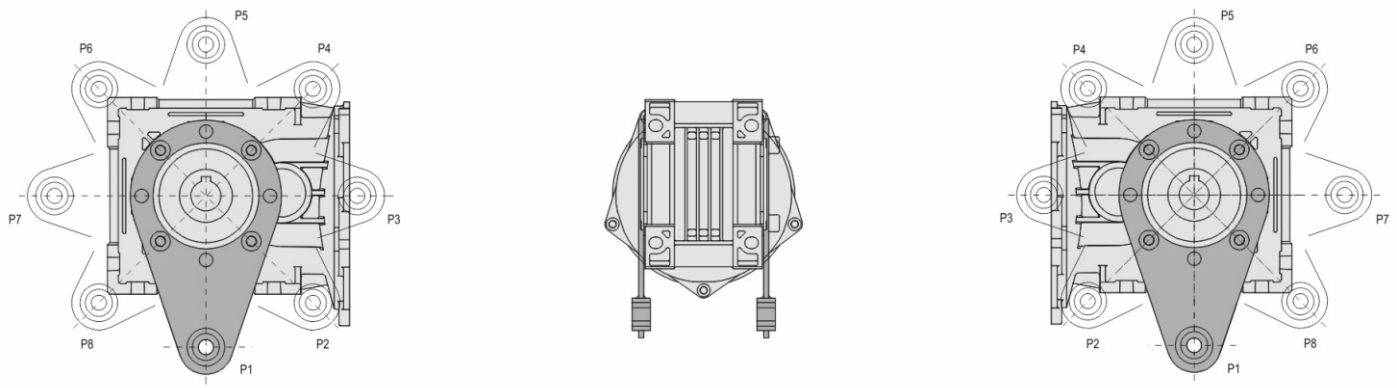

J K J K

	P1		P2		P3		P4		P5		P6		P7		P8	
	J	K	J	K	J	K	J	K	J	K	J	K	J	K	J	K
BA42		*	/	/	/	/	/	/			/	/			/	/
BA52/A53			/	/	/	/	/	/								
BA72/A73			/	/	/	/	/	/								

(*) Not available with Shrink disc (/) Not available

4.3.2 Torque arm: BA Dimensions

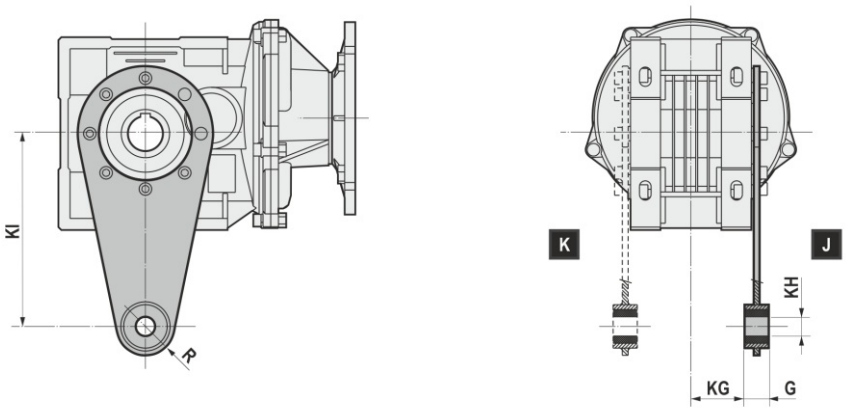

	KI	KG	KH	G	R
BA42	100	41	10	14	18
BA52/BA53	150	47	10	14	18
BA72/BA73	200	55,5	20	25	30

Unless specified otherwise, the reduction unit is supplied with the accessorie in pos. J referred to position B3/B5.

4.3 SHAFT MOUNTING FASTENING

4.3.3 Torque arm: B Mounting position

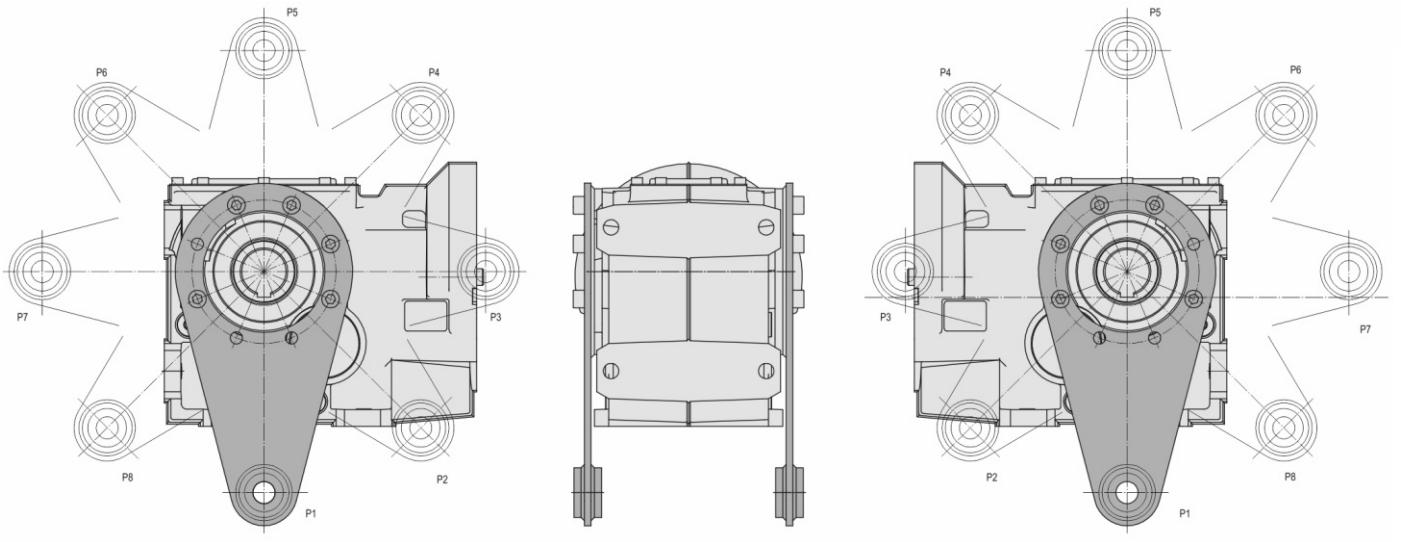

J K J K

	P1		P2		P3		P4		P5		P6		P7		P8	
	J	K	J	K	J	K	J	K	J	K	J	K	J	K	J	K
B063					/	/										
B083			/	/	/	/										
B103			/	/	/	/										
B123			/	/	/	/										

(/) Not available

4.3.4 Torque arm: B063-083-103-123 Dimensions

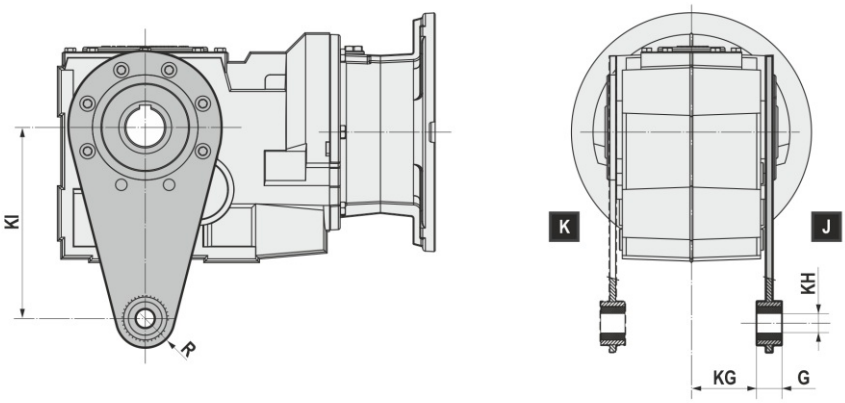

	KI	KG	KH	G	R
B063S	200	62	20	25	30
B083S	200	68,5	20	25	30
B103S	250	83	25	30	35
B123S	300	91,5	25	40	40
B063U	200	62	20	25	30
B083U	200	78,5	20	25	30
B103U	250	95	25	30	35
B123U	300	103,5	25	40	40

Unless specified otherwise, the reduction unit is supplied with the accessorie in pos. J referred to position B3/B5.

4.3.5 Torque arm: B143-153-163 Dimensions

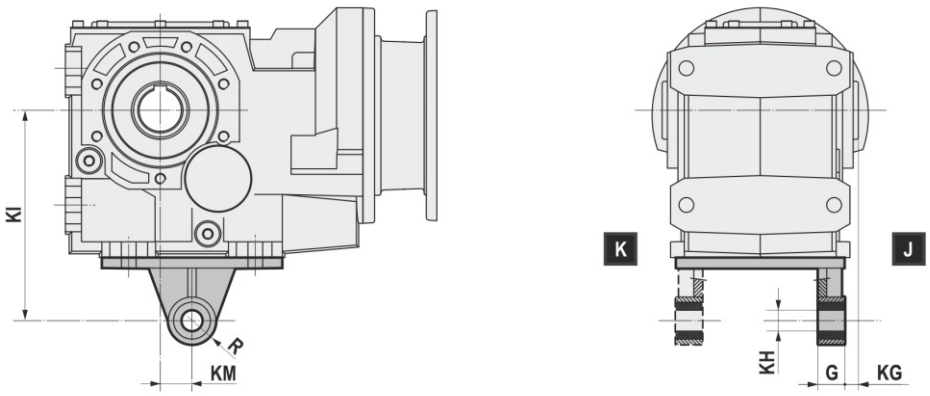

	KM	KI	KG	KH	G	R
B143	45	350	40	30	60	45
B153	45	450	45	30	60	45
B163	60	550	7,5	40	110	65

Unless specified otherwise, the reduction unit is supplied with the accessorie in pos. J referred to position B3/B5.

4.4 BACKSTOP DEVICE

The gear reducer can be supplied with backstop device on input shaft. Backstop device allows output shaft rotation in only one sense of direction; according to the size, it is available in the input flange or in the motor with the same dimensions. It is important to specify the required sense of direction on the order. The backstop device is not available for mounting position V5 with motorsize IEC 100...280. On request, the direction of rotation of low speed shaft can be reversed; in this case, it is necessary to specify “opposite rotation" to catalogue when ordering.

Certified accessory for ATEX 3G/3D, only.

SENSE OF DIRECTION AVAILABLE STANDARD

BA..2/S - **BA..**3/C-D-P-L - **B..**3/C-D-P-L

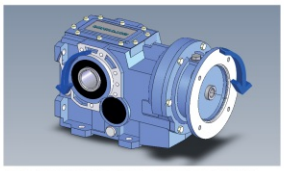

CLOCKWISE SENSE OF DIRECTION REFERRED TO HIGH SPEED SHAFT

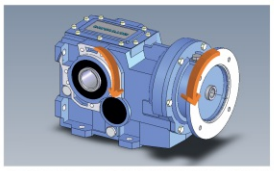

COUNTER CLOCKWISE SENSE OF DIRECTION REFERRED TO HIGH SPEED SHAFT

BA..2/C-D-P-L - **BA..**3/S - **B..**3/S-M

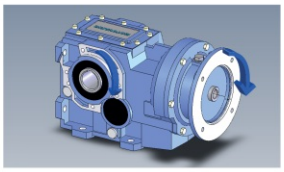

CLOCKWISE SENSE OF DIRECTION REFERRED TO HIGH SPEED SHAFT

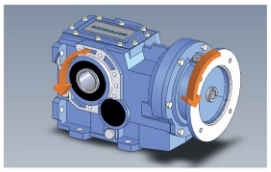

COUNTER CLOCKWISE SENSE OF DIRECTION REFERRED TO HIGH SPEED SHAFT

SENSE OF DIRECTION AVAILABLE OPPOSITE ROTATION

BA..2/S - **BA..**3/C-D-P-L - **B..**3/C-D-P-L

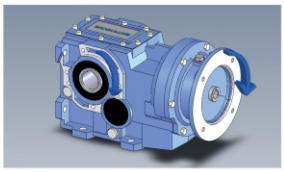

CLOCKWISE SENSE OF DIRECTION REFERRED TO HIGH SPEED SHAFT

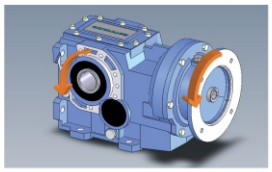

COUNTER CLOCKWISE SENSE OF DIRECTION REFERRED TO HIGH SPEED SHAFT

BA..2/C-D-P-L - **BA..**3/S - **B..**3/S-M

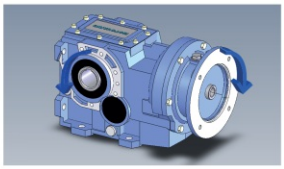

CLOCKWISE SENSE OF DIRECTION REFERRED TO HIGH SPEED SHAFT

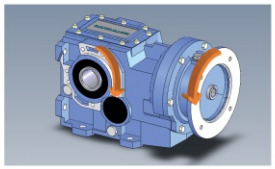

COUNTER CLOCKWISE SENSE OF DIRECTION REFERRED TO HIGH SPEED SHAFT

	063	071	080	090	100-112	132	160	180	200	225	250	280
	140x11	160x14	200x19	200x24	250x28	300x38	350x42	350x48	400x55	450x60	550x65	550x75
B063	B5	B5	B5	B5	B5							
B083			B5	B5	B5	B5						
B103			B5	B5	B5	B5	B5					
B123				B5	B5	B5	B5	B5				
B143					B5	B5	B5	B5	B5			
B153						B5	B5	B5	B5	B5		
B163							B5	B5	B5	B5	B5	B5

4.5 OUTPUT SHAFT WITH SHRINK DISC

Clean and degrease the surfaces of the shaft to be fitted to. Comply with the indicated tightening torque of screws (M_T).

Certified accessory for ATEX 3G/3D, only.

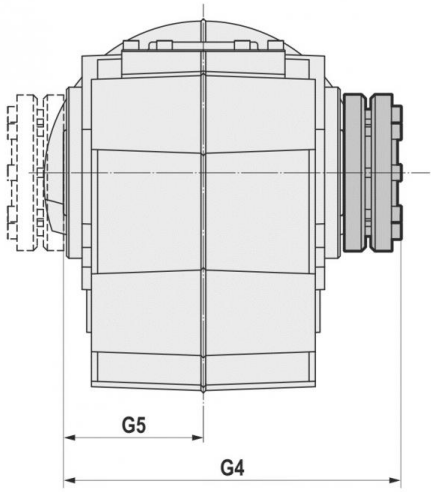

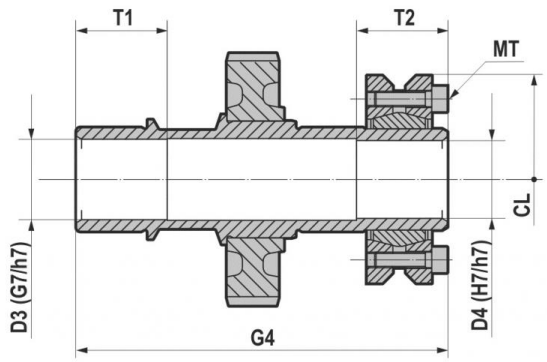

	D3	D4	G4	G5	T1	T2	CL	M_T 12,9 [Nm]
BA42	24	24	130	50	25	35	72	15
BA52-BA53	31	30	143	56	35	35	80	15
BA72-BA73	36	35	173	70	40	35	80	15
B063	36	35	173	70	40	35	80	15
B083	41	40	217	90	50	40	100	15
B103	51	50	248	105	55	40	115	15
B123	61	60	282	120	60	50	145	40
B143	72	70	355	150	70	65	170	50
B153	92	90	415	175	80	75	184	70
B163	102	100	512	222,5	100	100	215	70

4.6 REINFORCED OIL SEALS FOR OUTPUT SHAFT

The reinforced seal can be done depending on the gearbox size by means of two oil seals or through the standard oil seal with VRM ring. The difference of the two solutions is explained on the drawings.
On request the gear reducer can be supplied with fluoroelastomer FPM (FKM) seals.

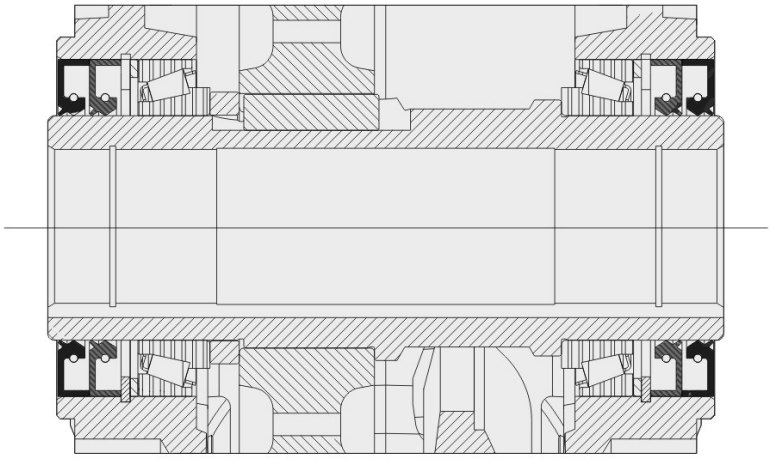

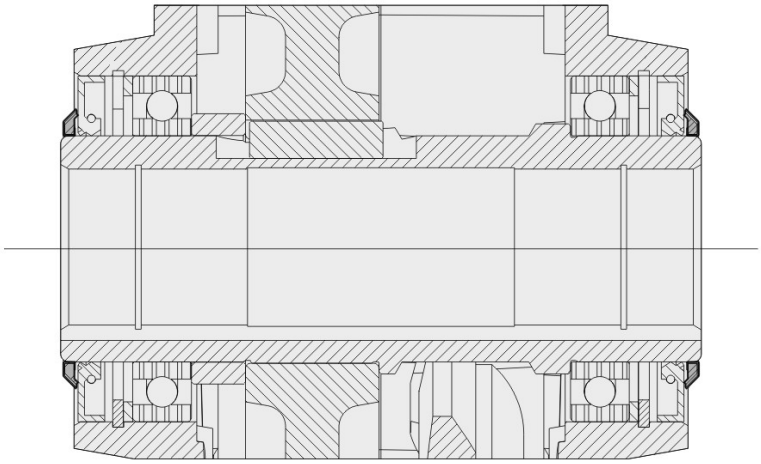

	Double oil seal	VRM ring
B063		x
B083		x
B103		x
B123		x
B143	x	
B153	x	
B163	x	

4.7 ASSEMBLING/DISASSEMBLING KIT

Mounting/dismounting kit for hollow shaft gear reducers with keyway. On request delivery includes:

1. Retaining bolt
2. Circlip
3. Fixed nut
4. Forcing washer

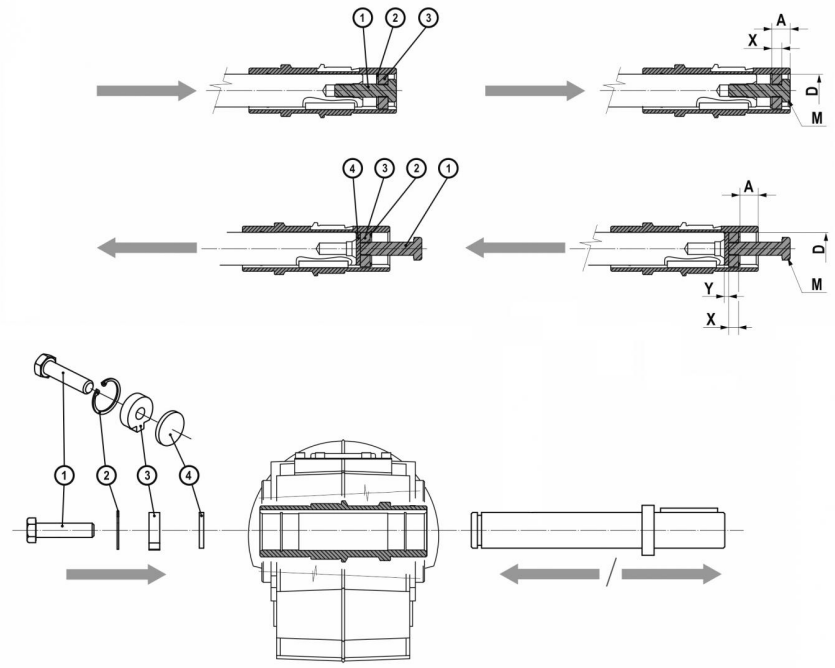

	D	A	X	Y	M
BA42	20	-	-	-	-
BA52/BA53	25	-	-	-	-
	28				
BA72/BA73	25	12	12	5	M12x45
	30	13,8	10		M10x35
B063	35	12	12	5	M12x45
	40				M16x50
B083	40	22,25	12	5	M16x50
	45				
B103	50	25	12	5	M16x50
B123	60	28	16	5	M20x70
B143	70	27,5	16	5	M20x70
B153	90	34	20	5	M24x60
B163	100	40	20	5	M24x120

5.1 B/BA GEARED MOTORS (50Hz)

If “Ex” mark is present, contact MOTOVARIO TECHNICAL SERVICE.

0.09 kW

n2 [rpm]	M2 [Nm]	fs	i	Gear reducer	Motor	Fr2 D-S-P [N]	Fr2 C [N]
25.5	32	3.2	33.78	BA42	63A6	-	3507
18.3	45	2.3	47.12	BA42	63A6	-	3918
15.0	55	1.9	57.43	BA42	63A6	-	4000
13.4	61	1.5	64.13	BA42	63A6	-	4000
13.3	62	2.8	64.87	BA52	63A6	-	4000
11.7	67	2.8	73.70	BA53	63A6	-	4000
11.0	75	1.3	78.17	BA42	63A6	-	4000
10.9	76	2.3	79.07	BA52	63A6	-	4000
9.2	85	2.2	93.33	BA53	63A6	-	4000
7.7	101	1.8	111.61	BA53	63A6	-	4000
6.3	124	1.5	136.53	BA53	63A6	-	4000
5.7	136	2.8	149.73	BA73	63A6	10000	5500
5.0	157	1.2	172.53	BA53	63A6	-	4000
4.8	164	2.4	180.23	BA73	63A6	10000	5500
4.4	179	1.0	197.11	BA53	63A6	-	4000
3.9	203	1.9	222.93	BA73	63A6	10000	5500
3.3	236	1.6	260.20	BA73	63A6	10000	5500
2.7	292	1.3	321.85	BA73	63A6	10000	5500
2.4	325	1.2	357.95	BA73	63A6	10000	5500

0.12 kW

n2 [rpm]	M2 [Nm]	fs	i	Gear reducer	Motor	Fr2 D-S-P [N]	Fr2 C [N]
30.7	36	2.8	28.00	BA42	63B6	-	3294
28.4	38	2.7	47.12	BA42	63A4	-	3379
27.5	40	2.6	31.27	BA42	63B6	-	3417
25.5	43	2.4	33.78	BA42	63B6	-	3507
23.3	47	2.2	57.43	BA42	63A4	-	3610
20.9	52	1.8	64.13	BA42	63A4	-	3745
20.7	53	3.3	64.87	BA52	63A4	-	4000
20.5	54	3.2	41.97	BA52	63B6	-	4000
18.3	60	1.7	47.12	BA42	63B6	-	3918
18.2	57	3.3	73.70	BA53	63A4	-	4000
17.1	64	1.5	78.17	BA42	63A4	-	4000
16.9	64	2.7	79.07	BA52	63A4	-	4000
16.8	66	2.9	51.34	BA52	63B6	-	4000
15.0	73	1.4	57.43	BA42	63B6	-	4000
14.4	72	2.6	93.33	BA53	63A4	-	4000
13.4	82	1.1	64.13	BA42	63B6	-	4000
13.3	83	2.1	64.87	BA52	63B6	-	4000
12.0	86	2.2	111.61	BA53	63A4	-	4000
11.7	89	2.1	73.70	BA53	63B6	-	4000

5.1 B/BA GEARED MOTORS (50Hz)

0.12 kW

n2 [rpm]	M2 [Nm]	fs	i	Gear reducer	Motor	Fr2 D-S-P [N]	Fr2 C [N]
10.9	101	1.7	79.07	BA52	63B6	-	4000
9.8	105	1.8	136.53	BA53	63A4	-	4000
9.2	113	1.6	93.33	BA53	63B6	-	4000
8.9	115	3.3	149.73	BA73	63A4	10000	5500
7.8	133	1.4	172.53	BA53	63A4	-	4000
7.7	135	1.4	111.61	BA53	63B6	-	4000
7.4	139	2.8	180.23	BA73	63A4	10000	5500
7.1	146	2.6	120.34	BA73	63B6	10000	5500
6.8	152	1.2	197.11	BA53	63A4	-	4000
6.3	165	1.1	136.53	BA53	63B6	-	4000
6.2	169	3.0	139.15	B063	63B6	12000	7811
6.0	172	2.2	222.93	BA73	63A4	10000	5500
5.7	181	2.1	149.73	BA73	63B6	10000	5500
5.5	191	2.7	157.42	B063	63B6	12000	8000
5.1	200	1.9	260.20	BA73	63A4	10000	5500
4.8	218	1.8	180.23	BA73	63B6	10000	5500
4.2	248	1.6	321.85	BA73	63A4	10000	5500
3.9	270	1.4	222.93	BA73	63B6	10000	5500
3.7	276	1.4	357.95	BA73	63A4	10000	5500
3.3	315	1.2	260.20	BA73	63B6	10000	5500
3.0	341	1.2	442.76	BA73	63A4	10000	5500

0.15 kW

n2 [rpm]	M2 [Nm]	fs	i	Gear reducer	Motor	Fr2 D-S-P [N]	Fr2 C [N]
56.0	25	3.1	14.46	BA42	63C6	-	2696
35.3	39	2.6	22.97	BA42	63C6	-	3146
28.9	48	2.1	28.00	BA42	63C6	-	3360
25.9	53	1.9	31.27	BA42	63C6	-	3486
25.6	54	3.2	31.63	BA52	63C6	-	3750
24.0	57	1.8	33.78	BA42	63C6	-	3577
23.1	60	2.9	35.10	BA52	63C6	-	3882
19.3	71	2.4	41.97	BA52	63C6	-	4000
17.2	80	1.3	47.12	BA42	63C6	-	3997
15.8	87	2.2	51.34	BA52	63C6	-	4000
14.1	97	1.0	57.43	BA42	63C6	-	4000
12.5	110	1.6	64.87	BA52	63C6	-	4000
11.0	118	1.6	73.70	BA53	63C6	-	4000
10.2	134	1.3	79.07	BA52	63C6	-	4000
10.0	130	3.0	80.83	BA73	63C6	10000	5500
8.7	150	1.2	93.33	BA53	63C6	-	4000
8.3	156	2.4	97.29	BA73	63C6	10000	5500
8.0	163	3.1	101.20	B063	63C6	12000	7162
7.3	179	1.0	111.61	BA53	63C6	-	4000

5.1 B/BA GEARED MOTORS (50Hz)

0.15 kW

n2 [rpm]	M2 [Nm]	fs	i	Gear reducer	Motor	Fr2 D-S-P [N]	Fr2 C [N]
7.2	180	2.8	111.74	B063	63C6	12000	7385
6.7	193	2.0	120.34	BA73	63C6	10000	5500
6.5	200	2.6	124.20	B063	63C6	12000	7630
5.8	224	2.3	139.15	B063	63C6	12000	7900
5.4	241	1.6	149.73	BA73	63C6	10000	5500
5.1	253	2.0	157.42	B063	63C6	12000	8000
4.5	290	1.3	180.23	BA73	63C6	10000	5500
3.6	358	1.1	222.93	BA73	63C6	10000	5500

0.18 kW

n2 [rpm]	M2 [Nm]	fs	i	Gear reducer	Motor	Fr2 D-S-P [N]	Fr2 C [N]
69.5	24	3.2	12.95	BA42	71A6	-	2509
62.2	26	2.9	14.46	BA42	71A6	-	2603
59.4	27	Ex	47.12	BA42	63A2	-	2643
48.8	32	Ex	57.43	BA42	63A2	-	2824
47.5	34	3.0	28.00	BA42	63B4	-	2848
43.7	36	Ex	64.13	BA42	63A2	-	2929
42.5	38	2.7	31.27	BA42	63B4	-	2955
39.4	41	2.5	33.78	BA42	63B4	-	3032
39.2	42	2.4	22.97	BA42	71A6	-	3037
35.8	44	Ex	78.17	BA42	63A2	-	3129
35.4	45	Ex	79.07	BA52	63A2	-	3366
32.1	51	2.0	28.00	BA42	71A6	-	3244
31.7	52	3.3	41.97	BA52	63B4	-	3492
30.0	50	Ex	93.33	BA53	63A2	-	3557
28.8	57	1.8	31.27	BA42	71A6	-	3366
28.5	58	3.0	31.63	BA52	71A6	-	3620
28.2	58	1.8	47.12	BA42	63B4	-	3388
26.6	62	1.7	33.78	BA42	71A6	-	3454
25.9	63	3.0	51.34	BA52	63B4	-	3735
25.6	64	2.7	35.10	BA52	71A6	-	3748
25.1	60	Ex	111.61	BA53	63A2	-	3775
23.2	71	1.4	57.43	BA42	63B4	-	3619
21.4	77	2.2	41.97	BA52	71A6	-	3978
20.7	79	1.2	64.13	BA42	63B4	-	3754
20.5	80	2.2	64.87	BA52	63B4	-	4000
20.5	73	Ex	136.53	BA53	63A2	-	4000
19.1	86	1.2	47.12	BA42	71A6	-	3859
18.0	86	2.2	73.70	BA53	63B4	-	4000
17.5	94	2.0	51.34	BA52	71A6	-	4000
16.8	97	1.8	79.07	BA52	63B4	-	4000
16.2	92	Ex	172.53	BA53	63A2	-	4000
15.5	96	Ex	180.23	BA73	63A2	10000	5500

5.1 B/BA GEARED MOTORS (50Hz)

0.18 kW

n2 [rpm]	M2 [Nm]	fs	i	Gear reducer	Motor	Fr2 D-S-P [N]	Fr2 C [N]
14.3	109	1.7	93.33	BA53	63B4	-	4000
14.2	105	Ex	197.11	BA53	63A2	-	4000
13.9	119	1.4	64.87	BA52	71A6	-	4000
13.7	113	3.4	97.29	BA73	63B4	10000	5500
12.6	119	Ex	222.93	BA73	63A2	10000	5500
12.2	128	1.5	73.70	BA53	71A6	-	4000
11.9	130	1.4	111.61	BA53	63B4	-	4000
11.4	145	1.2	79.07	BA52	71A6	-	4000
11.2	133	Ex	249.08	BA53	63A2	-	4000
11.1	140	2.7	80.83	BA73	71A6	10000	5500
11.1	140	2.7	120.34	BA73	63B4	10000	5500
10.8	139	Ex	260.20	BA73	63A2	10000	5500
10.3	145	Ex	271.16	BA53	63A2	-	4000
9.7	159	1.2	136.53	BA53	63B4	-	4000
9.6	162	3.2	139.15	B063	63B4	12000	6744
9.6	162	1.1	93.33	BA53	71A6	-	4000
9.3	169	2.3	97.29	BA73	71A6	10000	5500
8.9	176	2.9	101.20	B063	71A6	12000	6893
8.9	174	2.2	149.73	BA73	63B4	10000	5500
8.7	172	Ex	321.85	BA73	63A2	10000	5500
8.4	183	2.8	157.42	B063	63B4	12000	7005
8.1	194	2.6	111.74	B063	71A6	12000	7106
7.8	191	Ex	357.95	BA73	63A2	10000	5500
7.5	209	1.8	120.34	BA73	71A6	10000	5500
7.4	210	1.8	180.23	BA73	63B4	10000	5500
7.2	216	2.4	124.20	B063	71A6	12000	7340
6.5	242	2.1	139.15	B063	71A6	12000	7597
6.3	236	Ex	442.76	BA73	63A2	10000	5500
6.0	260	1.5	149.73	BA73	71A6	10000	5500
6.0	259	1.5	222.93	BA73	63B4	10000	5500
5.7	273	1.9	157.42	B063	71A6	12000	7885
5.1	303	1.3	260.20	BA73	63B4	10000	5500
5.0	313	1.2	180.23	BA73	71A6	10000	5500
4.1	374	1.0	321.85	BA73	63B4	10000	5500

0.22 kW

n2 [rpm]	M2 [Nm]	fs	i	Gear reducer	Motor	Fr2 D-S-P [N]	Fr2 C [N]
57.9	34	3.0	22.97	BA42	63C4	-	2667
47.5	42	2.4	28.00	BA42	63C4	-	2848
42.5	47	2.2	31.27	BA42	63C4	-	2955
39.4	51	2.0	33.78	BA42	63C4	-	3032
37.9	53	3.2	35.10	BA52	63C4	-	3290
31.7	63	2.7	41.97	BA52	63C4	-	3492

5.1 B/BA GEARED MOTORS (50Hz)

0.22 kW

n2 [rpm]	M2 [Nm]	fs	i	Gear reducer	Motor	Fr2 D-S-P [N]	Fr2 C [N]
28.2	71	1.4	47.12	BA42	63C4	-	3388
25.9	77	2.4	51.34	BA52	63C4	-	3735
23.2	86	1.2	57.43	BA42	63C4	-	3619
20.5	97	1.8	64.87	BA52	63C4	-	4000
18.0	105	1.8	73.70	BA53	63C4	-	4000
16.8	119	1.4	79.07	BA52	63C4	-	4000
16.5	115	3.3	80.83	BA73	63C4	10000	5500
14.3	133	1.4	93.33	BA53	63C4	-	4000
13.7	138	2.8	97.29	BA73	63C4	10000	5500
11.9	159	3.2	111.74	B063	63C4	12000	6262
11.9	159	1.2	111.61	BA53	63C4	-	4000
11.1	171	2.2	120.34	BA73	63C4	10000	5500
10.7	177	2.9	124.20	B063	63C4	12000	6469
9.6	198	2.6	139.15	B063	63C4	12000	6697
8.9	213	1.8	149.73	BA73	63C4	10000	5500
8.4	224	2.3	157.42	B063	63C4	12000	6953
7.4	256	1.5	180.23	BA73	63C4	10000	5500
6.0	317	1.2	222.93	BA73	63C4	10000	5500
5.1	370	1.0	260.20	BA73	63C4	10000	5500

0.25 kW

n2 [rpm]	M2 [Nm]	fs	i	Gear reducer	Motor	Fr2 D-S-P [N]	Fr2 C [N]
96.1	24	3.3	14.46	BA42	71A4	-	2252
91.3	25	3.1	14.46	BA42	63D4	-	2291
89.6	24	Ex	31.27	BA42	63B2	-	2306
84.7	27	2.8	10.62	BA42	71B6	-	2349
82.9	26	Ex	33.78	BA42	63B2	-	2366
69.5	33	2.3	12.95	BA42	71B6	-	2509
62.2	37	2.1	14.46	BA42	71B6	-	2603
60.5	37	2.7	22.97	BA42	71A4	-	2628
59.4	37	Ex	47.12	BA42	63B2	-	2643
57.5	39	2.6	22.97	BA42	63D4	-	2673
54.6	42	2.4	16.47	BA42	71B6	-	2718
49.6	46	2.2	28.00	BA42	71A4	-	2807
48.8	45	Ex	57.43	BA42	63B2	-	2824
47.1	48	2.1	28.00	BA42	63D4	-	2855
44.5	51	2.0	31.27	BA42	71A4	-	2912
43.9	52	3.3	31.63	BA52	71A4	-	3132
43.7	50	Ex	64.13	BA42	63B2	-	2929
43.2	51	Ex	64.87	BA52	63B2	-	3151
42.2	54	1.9	31.27	BA42	63D4	-	2962
41.7	54	3.2	31.63	BA52	63D4	-	3186
41.1	55	1.9	33.78	BA42	71A4	-	2988

5.1 B/BA GEARED MOTORS (50Hz)

0.25 kW

n2 [rpm]	M2 [Nm]	fs	i	Gear reducer	Motor	Fr2 D-S-P [N]	Fr2 C [N]
39.6	57	3.0	35.10	BA52	71A4	-	3242
39.2	58	1.8	22.97	BA42	71B6	-	3037
39.1	58	1.8	33.78	BA42	63D4	-	3040
38.0	55	Ex	73.70	BA53	63B2	-	3288
37.6	60	2.8	35.10	BA52	63D4	-	3299
36.0	64	2.7	25.03	BA52	71B6	-	3349
35.8	61	Ex	78.17	BA42	63B2	-	3129
35.4	62	Ex	79.07	BA52	63B2	-	3366
33.1	68	2.5	41.97	BA52	71A4	-	3441
32.1	71	1.4	28.00	BA42	71B6	-	3244
31.5	72	2.4	41.97	BA52	63D4	-	3501
30.0	69	Ex	93.33	BA53	63B2	-	3557
29.5	77	1.3	47.12	BA42	71A4	-	3338
28.8	80	1.3	31.27	BA42	71B6	-	3366
28.5	81	2.1	31.63	BA52	71B6	-	3620
28.0	81	1.3	47.12	BA42	63D4	-	3396
27.1	84	2.2	51.34	BA52	71A4	-	3681
26.6	86	1.2	33.78	BA42	71B6	-	3454
25.7	88	2.1	51.34	BA52	63D4	-	3745
25.6	89	1.9	35.10	BA52	71B6	-	3748
25.1	83	Ex	111.61	BA53	63B2	-	3775
24.2	94	1.1	57.43	BA42	71A4	-	3566
23.3	89	Ex	120.34	BA73	63B2	9807	4904
23.0	99	1.0	57.43	BA42	63D4	-	3628
21.4	107	1.6	41.97	BA52	71B6	-	3978
21.4	106	1.6	64.87	BA52	71A4	-	3979
20.5	101	Ex	136.53	BA53	63B2	-	4000
20.3	111	1.5	64.87	BA52	63D4	-	4000
18.9	114	1.7	73.70	BA53	71A4	-	4000
18.7	111	Ex	149.73	BA73	63B2	10000	5274
17.9	120	1.6	73.70	BA53	63D4	-	4000
17.8	117	Ex	157.42	B063	63B2	12000	5514
17.6	129	1.3	79.07	BA52	71A4	-	4000
17.5	131	1.4	51.34	BA52	71B6	-	4000
17.2	125	3.1	80.83	BA73	71A4	10000	5424
17.0	127	3.0	52.83	BA73	71B6	10000	5441
16.7	136	1.3	79.07	BA52	63D4	-	4000
16.3	132	2.9	80.83	BA73	63D4	10000	5500
16.2	128	Ex	172.53	BA53	63B2	-	4000
15.5	133	Ex	180.23	BA73	63B2	10000	5500
14.9	144	1.3	93.33	BA53	71A4	-	4000
14.3	150	2.5	97.29	BA73	71A4	10000	5500
14.2	146	Ex	197.11	BA53	63B2	-	4000
14.1	152	1.2	93.33	BA53	63D4	-	4000
13.9	165	1.0	64.87	BA52	71B6	-	4000

5.1 B/BA GEARED MOTORS (50Hz)

0.25 kW

n2 [rpm]	M2 [Nm]	fs	i	Gear reducer	Motor	Fr2 D-S-P [N]	Fr2 C [N]
13.8	158	2.4	65.35	BA73	71B6	10000	5500
13.7	156	3.3	101.20	B063	71A4	12000	5967
13.6	158	2.4	97.29	BA73	63D4	10000	5500
13.0	167	3.1	69.16	B063	71B6	12000	6064
13.0	165	3.1	101.20	B063	63D4	12000	6062
12.6	165	Ex	222.93	BA73	63B2	10000	5500
12.5	173	1.1	111.61	BA53	71A4	-	4000
12.4	173	3.0	111.74	B063	71A4	12000	6151
12.2	178	1.1	73.70	BA53	71B6	-	4000
11.8	182	2.8	111.74	B063	63D4	12000	6249
11.8	182	1.0	111.61	BA53	63D4	-	4000
11.6	187	2.7	77.48	B063	71B6	12000	6278
11.6	186	2.1	120.34	BA73	71A4	10000	5500
11.2	192	2.7	124.20	B063	71A4	12000	6352
11.1	195	2.0	80.83	BA73	71B6	10000	5500
11.0	196	2.0	120.34	BA73	63D4	10000	5500
10.8	193	Ex	260.20	BA73	63B2	10000	5500
10.6	202	2.5	124.20	B063	63D4	12000	6453
10.0	215	2.4	139.15	B063	71A4	12000	6575
10.0	218	2.3	90.33	B063	71B6	12000	6577
9.5	227	2.3	139.15	B063	63D4	12000	6678
9.3	235	1.6	97.29	BA73	71B6	10000	5500
9.3	231	1.7	149.73	BA73	71A4	10000	5500
8.9	244	2.1	101.20	B063	71B6	12000	6805
8.8	243	2.1	157.42	B063	71A4	12000	6823
8.8	244	1.6	149.73	BA73	63D4	10000	5500
8.7	238	Ex	321.85	BA73	63B2	10000	5500
8.4	256	2.0	157.42	B063	63D4	12000	6929
8.1	269	1.9	111.74	B063	71B6	12000	7009
7.8	265	Ex	357.95	BA73	63B2	10000	5500
7.7	279	1.4	180.23	BA73	71A4	10000	5500
7.5	290	1.3	120.34	BA73	71B6	10000	5500
7.3	293	1.3	180.23	BA73	63D4	10000	5500
7.2	299	1.7	124.20	B063	71B6	12000	7232
6.5	336	1.5	139.15	B063	71B6	12000	7476
6.2	345	1.1	222.93	BA73	71A4	10000	5500
6.0	361	1.1	149.73	BA73	71B6	10000	5500
5.9	363	1.1	222.93	BA73	63D4	10000	5500
5.7	380	1.3	157.42	B063	71B6	12000	7748

0.37 kW

n2 [rpm]	M2 [Nm]	fs	i	Gear reducer	Motor	Fr2 D-S-P [N]	Fr2 C [N]
129.9	26	3.0	10.62	BA42	71B4	-	2037

5.1 B/BA GEARED MOTORS (50Hz)

0.37 kW

n2 [rpm]	M2 [Nm]	fs	i	Gear reducer	Motor	Fr2 D-S-P [N]	Fr2 C [N]
123.4	27	2.8	7.62	BA42	80A6	-	2072
122.7	26	Ex	22.97	BA42	71A2	-	2076
121.4	27	Ex	22.97	BA42	63C2	-	2083
115.5	29	2.6	7.62	BA42	71C6	-	2118
106.6	31	2.4	12.95	BA42	71B4	-	2176
100.7	32	Ex	28.00	BA42	71A2	-	2217
99.6	33	Ex	28.00	BA42	63C2	-	2225
95.4	35	2.2	14.46	BA42	71B4	-	2257
90.2	36	Ex	31.27	BA42	71A2	-	2300
89.2	36	Ex	31.27	BA42	63C2	-	2308
88.5	38	2.0	10.62	BA42	80A6	-	2315
83.8	40	2.5	16.47	BA42	71B4	-	2357
83.5	39	Ex	33.78	BA42	71A2	-	2360
82.8	41	1.9	10.62	BA42	71C6	-	2366
82.6	39	Ex	33.78	BA42	63C2	-	2369
80.4	40	Ex	35.10	BA52	71A2	-	2561
79.5	41	Ex	35.10	BA52	63C2	-	2570
76.0	45	3.0	11.57	BA52	71C6	-	2609
72.6	47	1.6	12.95	BA42	80A6	-	2473
68.0	50	1.5	12.95	BA42	71C6	-	2528
67.2	48	Ex	41.97	BA52	71A2	-	2719
66.5	49	Ex	41.97	BA52	63C2	-	2728
65.0	52	1.5	14.46	BA42	80A6	-	2565
64.3	53	2.6	14.63	BA52	80A6	-	2759
60.9	56	1.4	14.46	BA42	71C6	-	2622
60.2	56	2.4	14.63	BA52	71C6	-	2820
60.1	56	1.8	22.97	BA42	71B4	-	2634
59.8	54	Ex	47.12	BA42	71A2	-	2637
59.2	55	Ex	47.12	BA42	63C2	-	2647
57.1	59	1.7	16.47	BA42	80A6	-	2679
55.1	61	2.8	25.03	BA52	71B4	-	2904
54.9	62	2.8	17.11	BA52	80A6	-	2907
54.9	59	Ex	51.34	BA52	71A2	-	2907
54.3	60	Ex	51.34	BA52	63C2	-	2918
53.4	63	1.6	16.47	BA42	71C6	-	2739
51.4	66	2.6	17.11	BA52	71C6	-	2972
49.3	68	1.5	28.00	BA42	71B4	-	2813
49.1	66	Ex	57.43	BA42	71A2	-	2817
48.6	67	Ex	57.43	BA42	63C2	-	2827
45.9	74	2.3	20.46	BA52	80A6	-	3086
44.1	76	1.3	31.27	BA42	71B4	-	2919
44.0	74	Ex	64.13	BA42	71A2	-	2922
43.6	77	2.2	31.63	BA52	71B4	-	3139
43.5	74	Ex	64.13	BA42	63C2	-	2933
43.5	75	Ex	64.87	BA52	71A2	-	3143

5.1 B/BA GEARED MOTORS (50Hz)

0.37 kW

n2 [rpm]	M2 [Nm]	fs	i	Gear reducer	Motor	Fr2 D-S-P [N]	Fr2 C [N]
43.0	79	2.2	20.46	BA52	71C6	-	3154
43.0	75	Ex	64.87	BA52	63C2	-	3155
40.9	83	1.2	22.97	BA42	80A6	-	2994
40.9	82	1.3	33.78	BA42	71B4	-	2995
39.3	85	2.0	35.10	BA52	71B4	-	3250
38.3	89	1.2	22.97	BA42	71C6	-	3060
38.3	80	Ex	73.70	BA53	71A2	-	3280
37.9	81	Ex	73.70	BA53	63C2	-	3292
37.6	90	1.9	25.03	BA52	80A6	-	3300
35.7	91	Ex	79.07	BA52	71A2	-	3358
35.3	92	Ex	79.07	BA52	63C2	-	3370
35.2	96	1.8	25.03	BA52	71C6	-	3374
34.9	88	Ex	80.83	BA73	71A2	8568	4284
34.5	89	Ex	80.83	BA73	63C2	8599	4300
33.6	101	1.0	28.00	BA42	80A6	-	3198
32.9	102	1.7	41.97	BA52	71B4	-	3450
30.2	102	Ex	93.33	BA53	71A2	-	3548
29.9	103	Ex	93.33	BA53	63C2	-	3561
29.7	114	1.5	31.63	BA52	80A6	-	3568
29.0	106	Ex	97.29	BA73	71A2	9115	4557
28.7	107	Ex	97.29	BA73	63C2	9147	4574
28.4	119	3.0	33.04	BA72	80A6	9172	4586
27.8	122	1.4	31.63	BA52	71C6	-	3647
26.9	125	1.5	51.34	BA52	71B4	-	3689
26.8	127	1.4	35.10	BA52	80A6	-	3694
26.1	122	3.2	52.83	BA73	71B4	9436	4718
25.3	121	Ex	111.61	BA53	71A2	-	3766
25.2	122	Ex	111.74	B063	71A2	12000	4890
25.1	135	1.3	35.10	BA52	71C6	-	3776
25.0	123	Ex	111.74	B063	63C2	12000	4906
25.0	123	Ex	111.61	BA53	63C2	-	3780
23.4	131	Ex	120.34	BA73	71A2	9784	4892
23.2	132	Ex	120.34	BA73	63C2	9819	4910
23.0	147	2.3	40.87	BA72	80A6	9845	4923
22.7	135	Ex	124.20	B063	71A2	12000	5051
22.5	137	Ex	124.20	B063	63C2	12000	5068
22.4	151	1.1	41.97	BA52	80A6	-	3921
21.4	150	2.6	43.89	BA73	80A6	10000	5041
21.3	158	1.1	64.87	BA52	71B4	-	3989
21.1	151	2.5	65.35	BA73	71B4	10000	5065
21.0	162	1.1	41.97	BA52	71C6	-	4000
20.7	149	Ex	136.53	BA53	71A2	-	4000
20.6	165	1.8	45.64	BA72	80A6	10000	5107
20.4	158	2.7	43.22	B063	71C6	12000	5214
20.4	150	Ex	136.53	BA53	63C2	-	4000

5.1 B/BA GEARED MOTORS (50Hz)

0.37 kW

n2 [rpm]	M2 [Nm]	fs	i	Gear reducer	Motor	Fr2 D-S-P [N]	Fr2 C [N]
20.3	151	Ex	139.15	B063	71A2	12000	5230
20.1	153	Ex	139.15	B063	63C2	12000	5247
20.0	159	3.2	69.16	B063	71B4	12000	5248
20.0	160	2.4	43.89	BA73	71C6	10000	5153
18.8	163	Ex	149.73	BA73	71A2	10000	5262
18.7	170	1.1	73.70	BA53	71B4	-	4000
18.6	165	Ex	149.73	BA73	63C2	10000	5280
18.5	174	2.9	50.81	B063	80A6	12000	5367
18.3	185	1.0	51.34	BA52	80A6	-	4000
17.9	171	Ex	157.42	B063	71A2	12000	5430
17.8	179	2.9	77.48	B063	71B4	12000	5431
17.8	181	2.1	52.83	BA73	80A6	10000	5362
17.7	173	Ex	157.42	B063	63C2	12000	5448
17.3	185	2.8	50.81	B063	71C6	12000	5475
17.1	198	1.5	54.94	BA72	80A6	10000	5433
17.1	186	2.1	80.83	BA73	71B4	10000	5437
16.7	193	2.0	52.83	BA73	71C6	10000	5482
16.5	195	2.6	56.93	B063	80A6	12000	5554
15.6	196	Ex	180.23	BA73	71A2	10000	5500
15.5	208	2.5	56.93	B063	71C6	12000	5665
15.5	198	Ex	180.23	BA73	63C2	10000	5500
15.3	208	2.5	90.33	B063	71B4	12000	5687
14.4	223	1.7	65.35	BA73	80A6	10000	5500
14.2	224	1.7	97.29	BA73	71B4	10000	5500
13.8	245	1.2	67.96	BA72	80A6	10000	5500
13.6	236	2.2	69.16	B063	80A6	12000	5885
13.6	233	2.2	101.20	B063	71B4	12000	5883
13.6	236	3.1	69.14	B083	80A6	18000	9098
13.5	239	1.6	65.35	BA73	71C6	10000	5500
12.9	250	2.9	73.14	B083	80A6	18000	9257
12.7	252	2.0	69.16	B063	71C6	12000	6001
12.6	243	Ex	222.93	BA73	71A2	10000	5500
12.5	245	Ex	222.93	BA73	63C2	10000	5500
12.3	258	2.0	111.74	B063	71B4	12000	6057
12.1	265	1.9	77.48	B063	80A6	12000	6085
11.6	276	2.6	80.76	B083	80A6	18000	9545
11.6	276	1.4	80.83	BA73	80A6	10000	5500
11.5	277	1.4	120.34	BA73	71B4	10000	5500
11.4	283	1.8	77.48	B063	71C6	12000	6203
11.1	286	1.8	124.20	B063	71B4	12000	6247
10.9	295	1.3	80.83	BA73	71C6	10000	5500
10.8	283	Ex	260.20	BA73	71A2	10000	5500
10.7	286	Ex	260.20	BA73	63C2	10000	5500
10.4	309	1.7	90.33	B063	80A6	12000	6362
10.2	315	2.3	92.19	B083	80A6	18000	9940

5.1 B/BA GEARED MOTORS (50Hz)

0.37 kW

n2 [rpm]	M2 [Nm]	fs	i	Gear reducer	Motor	Fr2 D-S-P [N]	Fr2 C [N]
9.9	321	1.6	139.15	B063	71B4	12000	6455
9.7	330	1.5	90.33	B063	71C6	12000	6484
9.7	332	1.1	97.29	BA73	80A6	10000	5500
9.3	346	1.5	101.20	B063	80A6	12000	6573
9.3	344	2.1	100.57	B083	80A6	18000	10207
9.2	345	1.1	149.73	BA73	71B4	10000	5500
9.0	355	1.1	97.29	BA73	71C6	10000	5500
8.9	360	2.0	105.29	B083	80A6	18000	10350
8.8	363	1.4	157.42	B063	71B4	12000	6686
8.7	369	1.4	101.20	B063	71C6	12000	6697
8.4	382	1.3	111.74	B063	80A6	12000	6759
8.1	397	1.8	116.25	B083	80A6	18000	10664
7.9	408	1.3	111.74	B063	71C6	12000	6885
7.6	424	1.2	124.20	B063	80A6	12000	6962
7.4	433	1.7	126.76	B083	80A6	18000	10945
7.1	453	1.1	124.20	B063	71C6	12000	7090
6.8	475	1.1	139.15	B063	80A6	12000	7183
6.5	495	1.5	144.77	B083	80A6	18000	11387
6.5	494	3.1	144.69	B103	80A6	22000	14062
6.3	508	1.0	139.15	B063	71C6	12000	7313
5.7	565	2.7	165.25	B103	80A6	22000	14653

0.55 kW

n2 [rpm]	M2 [Nm]	fs	i	Gear reducer	Motor	Fr2 D-S-P [N]	Fr2 C [N]
264.5	18	Ex	10.62	BA42	71B2	-	1607
217.0	22	Ex	12.95	BA42	71B2	-	1716
194.4	25	Ex	14.46	BA42	71B2	-	1781
183.8	27	2.8	7.62	BA42	80A4	-	1814
179.9	28	2.8	7.62	BA42	71C4	-	1827
170.6	28	Ex	16.47	BA42	71B2	-	1860
131.8	38	2.0	10.62	BA42	80A4	-	2027
129.0	39	2.0	10.62	BA42	71C4	-	2042
122.3	39	Ex	22.97	BA42	71B2	-	2078
122.1	41	1.9	7.62	BA42	80B6	-	2079
121.0	41	3.3	11.57	BA52	80A4	-	2235
118.4	42	3.2	11.57	BA52	71C4	-	2251
117.5	43	3.2	7.91	BA52	80B6	-	2256
112.3	43	Ex	25.03	BA52	71B2	-	2291
108.1	46	1.7	12.95	BA42	80A4	-	2165
105.8	47	1.6	12.95	BA42	71C4	-	2181
100.4	48	Ex	28.00	BA42	71B2	-	2220
98.3	51	2.7	9.46	BA52	80B6	-	2395
96.8	52	1.5	14.46	BA42	80A4	-	2246

5.1 B/BA GEARED MOTORS (50Hz)

0.55 kW

n2 [rpm]	M2 [Nm]	fs	i	Gear reducer	Motor	Fr2 D-S-P [N]	Fr2 C [N]
95.7	52	2.6	14.63	BA52	80A4	-	2416
94.8	53	1.5	14.46	BA42	71C4	-	2263
93.7	53	2.6	14.63	BA52	71C4	-	2434
89.9	54	Ex	31.27	BA42	71B2	-	2303
88.8	54	Ex	31.63	BA52	71B2	-	2477
87.5	58	1.3	10.62	BA42	80B6	-	2323
85.0	59	1.7	16.47	BA42	80A4	-	2346
83.2	60	1.7	16.47	BA42	71C4	-	2363
83.2	58	Ex	33.78	BA42	71B2	-	2363
81.8	61	2.8	17.11	BA52	80A4	-	2546
80.4	63	2.2	11.57	BA52	80B6	-	2561
80.1	62	2.7	17.11	BA52	71C4	-	2564
80.1	60	Ex	35.10	BA52	71B2	-	2564
71.8	70	1.1	12.95	BA42	80B6	-	2481
68.4	73	2.3	20.46	BA52	80A4	-	2702
67.0	75	2.3	20.46	BA52	71C4	-	2722
67.0	72	Ex	41.97	BA52	71B2	-	2722
63.6	79	1.7	14.63	BA52	80B6	-	2769
60.9	82	1.3	22.97	BA42	80A4	-	2621
59.6	84	1.2	22.97	BA42	71C4	-	2640
59.6	81	Ex	47.12	BA42	71B2	-	2640
56.5	89	1.1	16.47	BA42	80B6	-	2689
55.9	89	1.9	25.03	BA52	80A4	-	2890
54.7	91	1.9	25.03	BA52	71C4	-	2911
54.7	88	Ex	51.34	BA52	71B2	-	2911
54.4	93	1.8	17.11	BA52	80B6	-	2918
53.2	86	Ex	52.83	BA73	71B2	7445	3723
50.0	100	1.0	28.00	BA42	80A4	-	2800
48.9	102	1.0	28.00	BA42	71C4	-	2820
45.5	111	1.5	20.46	BA52	80B6	-	3097
44.3	113	1.5	31.63	BA52	80A4	-	3124
43.3	115	1.5	31.63	BA52	71C4	-	3147
43.3	111	Ex	64.87	BA52	71B2	-	3147
43.0	106	Ex	65.35	BA73	71B2	7992	3996
42.4	118	3.0	33.04	BA72	80A4	8031	4016
39.9	125	1.4	35.10	BA52	80A4	-	3235
39.0	128	1.3	35.10	BA52	71C4	-	3258
38.1	120	Ex	73.70	BA53	71B2	-	3284
37.2	136	1.3	25.03	BA52	80B6	-	3312
36.3	126	Ex	77.48	B063	71B2	12000	4315
35.5	136	Ex	79.07	BA52	71B2	-	3362
34.8	131	Ex	80.83	BA73	71B2	8579	4289
34.3	146	2.3	40.87	BA72	80A4	8621	4311
33.9	149	2.4	27.45	BA72	80B6	8653	4326
33.4	150	1.1	41.97	BA52	80A4	-	3433

5.1 B/BA GEARED MOTORS (50Hz)

0.55 kW

n2 [rpm]	M2 [Nm]	fs	i	Gear reducer	Motor	Fr2 D-S-P [N]	Fr2 C [N]
32.6	153	1.1	41.97	BA52	71C4	-	3458
31.9	148	2.6	43.89	BA73	80A4	8828	4414
31.2	151	2.5	43.89	BA73	71C4	8892	4446
31.1	147	Ex	90.33	B063	71B2	12000	4521
30.7	163	1.8	45.64	BA72	80A4	8944	4472
30.1	152	Ex	93.33	BA53	71B2	-	3553
29.4	171	1.0	31.63	BA52	80B6	-	3581
28.9	158	Ex	97.29	BA73	71B2	9125	4563
28.1	179	2.0	33.04	BA72	80B6	9204	4602
27.8	172	2.5	33.43	B063	80B6	12000	4666
27.8	164	Ex	101.20	B063	71B2	12000	4678
27.6	172	3.0	50.81	B063	80A4	12000	4681
27.3	183	1.0	51.34	BA52	80A4	-	3672
27.0	175	2.9	50.81	B063	71C4	12000	4711
26.7	187	1.0	51.34	BA52	71C4	-	3698
26.5	178	2.2	52.83	BA73	80A4	9391	4696
25.9	182	2.1	52.83	BA73	71C4	9459	4730
25.5	196	1.5	54.94	BA72	80A4	9515	4757
25.1	181	Ex	111.74	B063	71B2	12000	4819
24.6	192	2.7	56.93	B063	80A4	12000	4842
24.1	198	2.2	38.58	B063	80B6	12000	4868
24.1	196	2.6	56.93	B063	71C4	12000	4873
23.4	195	Ex	120.34	BA73	71B2	9796	4898
22.8	221	1.5	40.87	BA72	80B6	9880	4940
22.6	202	Ex	124.20	B063	71B2	12000	4972
22.0	215	3.4	63.74	B083	80A4	18000	7750
21.5	222	1.9	43.22	B063	80B6	12000	5033
21.4	221	1.7	65.35	BA73	80A4	10000	5041
21.2	225	1.7	43.89	BA73	80B6	10000	5059
21.0	225	1.7	65.35	BA73	71C4	10000	5077
20.6	242	1.2	67.96	BA72	80A4	10000	5107
20.5	233	2.6	45.44	B083	80B6	18000	7918
20.4	247	1.2	45.64	BA72	80B6	10000	5126
20.2	234	2.2	69.16	B063	80A4	12000	5126
20.2	226	Ex	139.15	B063	71B2	12000	5141
20.2	233	3.1	69.14	B083	80A4	18000	7947
19.8	239	2.1	69.16	B063	71C4	12000	5159
19.1	247	2.9	73.14	B083	80A4	18000	8085
18.8	243	Ex	149.73	BA73	71B2	10000	5268
18.3	261	2.0	50.81	B063	80B6	12000	5274
18.2	263	2.8	51.19	B083	80B6	18000	8212
18.1	262	1.9	77.48	B063	80A4	12000	5297
17.9	256	Ex	157.42	B063	71B2	12000	5328
17.7	267	1.9	77.48	B063	71C4	12000	5331
17.6	271	1.4	52.83	BA73	80B6	10000	5382

5.1 B/BA GEARED MOTORS (50Hz)

0.55 kW

n2 [rpm]	M2 [Nm]	fs	i	Gear reducer	Motor	Fr2 D-S-P [N]	Fr2 C [N]
17.3	273	2.7	80.76	B083	80A4	18000	8333
17.3	273	1.4	80.83	BA73	80A4	10000	5411
17.0	279	1.4	80.83	BA73	71C4	10000	5450
16.9	298	1.0	54.94	BA72	80B6	10000	5452
16.7	285	2.5	55.52	B083	80B6	18000	8418
16.3	292	1.7	56.93	B063	80B6	12000	5448
15.6	293	Ex	180.23	BA73	71B2	10000	5500
15.5	305	1.7	90.33	B063	80A4	12000	5534
15.5	308	2.4	59.96	B083	80B6	18000	8616
15.2	312	1.6	90.33	B063	71C4	12000	5568
15.2	311	2.3	92.19	B083	80A4	18000	8675
14.6	327	2.2	63.74	B083	80B6	18000	8777
14.4	329	1.2	97.29	BA73	80A4	10000	5500
14.2	335	1.1	65.35	BA73	80B6	10000	5500
14.1	336	1.1	97.29	BA73	71C4	10000	5500
13.9	340	2.1	100.57	B083	80A4	18000	8905
13.8	342	1.5	101.20	B063	80A4	12000	5713
13.5	349	1.5	101.20	B063	71C4	12000	5748
13.5	355	2.0	69.14	B083	80B6	18000	8994
13.4	355	1.4	69.16	B063	80B6	12000	5754
13.3	356	2.0	105.29	B083	80A4	18000	9029
12.7	376	1.9	73.14	B083	80B6	18000	9146
12.5	377	1.4	111.74	B063	80A4	12000	5872
12.3	386	1.3	111.74	B063	71C4	12000	5907
12.0	398	1.3	77.48	B063	80B6	12000	5936
12.0	393	1.8	116.25	B083	80A4	18000	9300
11.5	415	1.7	80.76	B083	80B6	18000	9419
11.3	419	1.2	124.20	B063	80A4	12000	6043
11.0	429	1.2	124.20	B063	71C4	12000	6079
11.0	428	1.7	126.76	B083	80A4	18000	9541
10.3	464	1.1	90.33	B063	80B6	12000	6186
10.1	470	1.1	139.15	B063	80A4	12000	6230
10.1	473	1.5	92.19	B083	80B6	18000	9793
10.1	474	3.2	92.31	B103	80B6	22000	12129
9.8	480	1.1	139.15	B063	71C4	12000	6266
9.7	489	1.5	144.77	B083	80A4	18000	9920
9.7	489	3.1	144.69	B103	80A4	22000	12285
9.2	516	1.4	100.57	B083	80B6	18000	10045
8.8	541	1.3	105.29	B083	80B6	18000	10179
8.8	541	2.8	105.44	B103	80B6	22000	12635
8.5	558	2.8	165.25	B103	80A4	22000	12796
8.1	589	2.6	114.80	B103	80B6	22000	12968
8.0	597	1.2	116.25	B083	80B6	18000	10473
7.7	618	2.5	120.42	B103	80B6	22000	13158
7.3	651	1.1	126.76	B083	80B6	18000	10734

5.1 B/BA GEARED MOTORS (50Hz)

0.55 kW

n2 [rpm]	M2 [Nm]	fs	i	Gear reducer	Motor	Fr2 D-S-P [N]	Fr2 C [N]
7.0	682	2.3	132.87	B103	80B6	22000	13557
6.4	743	2.1	144.69	B103	80B6	22000	13909
5.6	848	1.8	165.25	B103	80B6	22000	14473

0.75 kW

n2 [rpm]	M2 [Nm]	fs	i	Gear reducer	Motor	Fr2 D-S-P [N]	Fr2 C [N]
372.9	18	Ex	7.62	BA42	80A2	-	1433
367.6	18	Ex	7.62	BA42	71C2	-	1440
267.3	25	Ex	10.62	BA42	80A2	-	1601
263.6	25	Ex	10.62	BA42	71C2	-	1609
219.3	30	Ex	12.95	BA42	80A2	-	1710
216.3	30	Ex	12.95	BA42	71C2	-	1719
194.4	34	Ex	14.46	BA42	80A2	-	1781
194.2	34	Ex	14.63	BA52	80A2	-	1909
193.7	34	Ex	14.46	BA42	71C2	-	1783
191.4	34	Ex	14.63	BA52	71C2	-	1918
183.8	37	2.1	7.62	BA42	80B4	-	1814
172.4	38	Ex	16.47	BA42	80A2	-	1853
170.0	39	Ex	16.47	BA42	71C2	-	1862
166.0	40	Ex	17.11	BA52	80A2	-	2011
163.6	40	Ex	17.11	BA52	71C2	-	2021
148.0	46	3.0	9.46	BA52	80B4	-	2090
137.3	48	Ex	20.46	BA52	80A2	-	2142
136.8	48	Ex	20.46	BA52	71C2	-	2145
131.8	52	1.5	10.62	BA42	80B4	-	2027
122.3	54	Ex	22.97	BA42	80A2	-	2078
121.9	54	Ex	22.97	BA42	71C2	-	2081
121.0	56	2.4	11.57	BA52	80B4	-	2235
120.8	57	1.4	7.62	BA42	80C6	-	2087
116.3	59	2.3	7.91	BA52	80C6	-	2264
116.3	59	2.3	7.91	BA52	90S6	-	2264
113.5	58	Ex	25.03	BA52	80A2	-	2283
111.9	59	Ex	25.03	BA52	71C2	-	2294
108.1	63	1.2	12.95	BA42	80B4	-	2165
101.4	65	Ex	28.00	BA42	80A2	-	2212
100.0	66	Ex	28.00	BA42	71C2	-	2222
97.2	71	1.9	9.46	BA52	80C6	-	2403
97.2	71	1.9	9.46	BA52	90S6	-	2403
96.8	70	1.1	14.46	BA42	80B4	-	2246
95.7	71	1.9	14.63	BA52	80B4	-	2416
89.9	73	Ex	31.27	BA42	80A2	-	2303
89.6	73	Ex	31.27	BA42	71C2	-	2306
88.8	74	Ex	31.63	BA52	80A2	-	2477

5.1 B/BA GEARED MOTORS (50Hz)

0.75 kW

n2 [rpm]	M2 [Nm]	fs	i	Gear reducer	Motor	Fr2 D-S-P [N]	Fr2 C [N]
88.5	74	Ex	31.63	BA52	71C2	-	2480
85.0	80	1.3	16.47	BA42	80B4	-	2346
83.2	79	Ex	33.78	BA42	80A2	-	2363
82.9	79	Ex	33.78	BA42	71C2	-	2366
81.8	83	2.1	17.11	BA52	80B4	-	2546
80.1	82	Ex	35.10	BA52	80A2	-	2564
79.8	82	Ex	35.10	BA52	71C2	-	2567
79.5	86	1.6	11.57	BA52	80C6	-	2570
79.5	86	1.6	11.57	BA52	90S6	-	2570
73.9	93	3.2	12.44	BA72	90S6	6671	3335
68.8	96	Ex	40.87	BA72	80A2	6834	3417
68.4	99	1.7	20.46	BA52	80B4	-	2702
67.0	98	Ex	41.97	BA52	80A2	-	2722
66.7	98	Ex	41.97	BA52	71C2	-	2725
64.0	97	Ex	43.89	BA73	80A2	6999	3499
63.8	98	Ex	43.89	BA73	71C2	7007	3504
62.9	109	1.3	14.63	BA52	80C6	-	2779
62.9	109	1.3	14.63	BA52	90S6	-	2779
61.7	111	3.2	14.91	BA72	90S6	7085	3542
61.6	107	Ex	45.64	BA72	80A2	7091	3545
55.9	122	1.4	25.03	BA52	80B4	-	2890
55.1	113	Ex	50.81	B063	71C2	12000	3754
54.7	120	Ex	51.34	BA52	80A2	-	2911
54.5	120	Ex	51.34	BA52	71C2	-	2914
53.8	128	1.3	17.11	BA52	80C6	-	2928
53.8	128	1.3	17.11	BA52	90S6	-	2928
53.2	117	Ex	52.83	BA73	80A2	7445	3723
53.0	117	Ex	52.83	BA73	71C2	7454	3727
51.3	134	2.7	17.94	BA72	90S6	7537	3768
51.1	128	Ex	54.94	BA72	80A2	7543	3771
51.0	133	2.7	27.45	BA72	80B4	7550	3775
49.4	126	Ex	56.93	B063	80A2	12000	3882
49.2	126	Ex	56.93	B063	71C2	12000	3886
45.0	153	1.1	20.46	BA52	80C6	-	3108
45.0	153	1.1	20.46	BA52	90S6	-	3108
44.3	154	1.1	31.63	BA52	80B4	-	3124
43.0	145	Ex	65.35	BA73	80A2	7992	3996
42.8	145	Ex	65.35	BA73	71C2	8001	4001
42.4	161	2.2	33.04	BA72	80B4	8031	4016
41.9	154	2.8	33.43	B063	80B4	12000	4071
41.5	166	2.2	22.19	BA72	90S6	8090	4045
41.3	159	Ex	67.96	BA72	80A2	8097	4048
41.1	158	2.7	22.39	B063	80C6	12000	4093
41.1	158	2.7	22.39	B063	90S6	12000	4093
40.6	153	Ex	69.16	B063	80A2	12000	4115

5.1 B/BA GEARED MOTORS (50Hz)

0.75 kW

n2 [rpm]	M2 [Nm]	fs	i	Gear reducer	Motor	Fr2 D-S-P [N]	Fr2 C [N]
40.5	154	Ex	69.16	B063	71C2	12000	4120
39.9	171	1.0	35.10	BA52	80B4	-	3235
38.4	162	Ex	73.14	B083	80A2	18000	6464
36.3	178	2.4	38.58	B063	80B4	12000	4247
36.3	172	Ex	77.48	B063	80A2	12000	4256
36.1	172	Ex	77.48	B063	71C2	12000	4261
35.3	185	2.3	26.09	B063	80C6	12000	4281
35.3	185	2.3	26.09	B063	90S6	12000	4281
34.8	179	Ex	80.76	B083	80A2	18000	6666
34.8	179	Ex	80.83	BA73	80A2	8579	4289
34.6	180	Ex	80.83	BA73	71C2	8589	4294
34.3	199	1.7	40.87	BA72	80B4	8621	4311
33.5	205	1.7	27.45	BA72	80C6	8684	4342
33.5	205	1.7	27.45	BA72	90S6	8684	4342
32.8	198	2.2	28.03	B063	80C6	12000	4372
32.8	198	2.2	28.03	B063	90S6	12000	4372
32.4	199	2.2	43.22	B063	80B4	12000	4391
31.9	202	1.9	43.89	BA73	80B4	8828	4414
31.1	200	Ex	90.33	B063	80A2	12000	4452
31.0	201	Ex	90.33	B063	71C2	12000	4457
30.7	222	1.3	45.64	BA72	80B4	8944	4472
30.5	204	Ex	92.19	B083	80A2	18000	6943
28.9	225	2.7	31.80	B083	80C6	18000	7043
28.9	225	2.7	31.80	B083	90S6	18000	7043
28.9	215	Ex	97.29	BA73	80A2	9125	4563
28.8	216	Ex	97.29	BA73	71C2	9136	4568
27.9	223	Ex	100.57	B083	80A2	18000	7131
27.8	224	Ex	101.20	B063	80A2	12000	4601
27.8	247	1.5	33.04	BA72	80C6	9238	4619
27.8	247	1.5	33.04	BA72	90S6	9238	4619
27.7	225	Ex	101.20	B063	71C2	12000	4606
27.6	234	2.2	50.81	B063	80B4	12000	4601
27.5	237	1.8	33.43	B063	80C6	12000	4599
27.5	237	1.8	33.43	B063	90S6	12000	4599
27.4	236	3.1	51.19	B083	80B4	18000	7168
26.7	233	Ex	105.29	B083	80A2	18000	7231
26.7	244	2.5	34.49	B083	80C6	18000	7220
26.7	244	2.5	34.49	B083	90S6	18000	7220
26.5	243	1.6	52.83	BA73	80B4	9391	4696
25.5	267	1.1	54.94	BA72	80B4	9515	4757
25.2	256	2.8	55.52	B083	80B4	18000	7347
25.1	248	Ex	111.74	B063	71C2	12000	4738
25.1	247	Ex	111.74	B063	80A2	12000	4734
24.6	262	1.9	56.93	B063	80B4	12000	4752
24.2	257	Ex	116.25	B083	80A2	18000	7453

5.1 B/BA GEARED MOTORS (50Hz)

0.75 kW

n2 [rpm]	M2 [Nm]	fs	i	Gear reducer	Motor	Fr2 D-S-P [N]	Fr2 C [N]
23.8	273	1.6	38.58	B063	80C6	12000	4790
23.8	273	1.6	38.58	B063	90S6	12000	4790
23.4	276	2.6	59.96	B083	80B4	18000	7520
23.4	266	Ex	120.34	BA73	80A2	9796	4898
23.3	267	Ex	120.34	BA73	71C2	9807	4904
23.2	280	2.2	39.60	B083	80C6	18000	7528
23.2	280	2.2	39.60	B083	90S6	18000	7528
22.6	275	Ex	124.20	B063	80A2	12000	4877
22.5	276	Ex	124.20	B063	71C2	12000	4882
22.5	305	1.1	40.87	BA72	80C6	9916	4958
22.5	305	1.1	40.87	BA72	90S6	9916	4958
22.2	281	Ex	126.76	B083	80A2	18000	7650
22.0	293	2.5	63.74	B083	80B4	18000	7660
21.4	304	2.0	42.95	B083	80C6	18000	7714
21.4	304	2.0	42.95	B083	90S6	18000	7714
21.4	301	1.3	65.35	BA73	80B4	10000	5041
21.3	306	1.4	43.22	B063	80C6	12000	4944
21.3	306	1.4	43.22	B063	90S6	12000	4944
21.0	311	1.2	43.89	BA73	80C6	10000	5077
21.0	311	1.2	43.89	BA73	90S6	10000	5077
20.2	308	Ex	139.15	B063	80A2	12000	5035
20.2	318	1.6	69.16	B063	80B4	12000	5017
20.2	322	1.9	45.44	B083	80C6	18000	7845
20.2	322	1.9	45.44	B083	90S6	18000	7845
20.2	318	2.3	69.14	B083	80B4	18000	7848
20.1	309	Ex	139.15	B063	71C2	12000	5040
19.4	320	Ex	144.77	B083	80A2	18000	7961
19.1	337	2.2	73.14	B083	80B4	18000	7981
18.1	360	1.4	50.81	B063	80C6	12000	5167
18.1	360	1.4	50.81	B063	90S6	12000	5167
18.1	357	1.4	77.48	B063	80B4	12000	5175
18.0	362	2.0	51.19	B083	80C6	18000	8127
18.0	362	2.0	51.19	B083	90S6	18000	8127
17.9	348	Ex	157.42	B063	80A2	12000	5208
17.8	350	Ex	157.42	B063	71C2	12000	5213
17.4	374	1.0	52.83	BA73	80C6	10000	5401
17.4	374	1.0	52.83	BA73	90S6	10000	5401
17.3	372	1.9	80.76	B083	80B4	18000	8219
17.3	372	1.0	80.83	BA73	80B4	10000	5411
16.6	393	1.8	55.52	B083	80C6	18000	8324
16.6	393	1.8	55.52	B083	90S6	18000	8324
16.2	403	1.3	56.93	B063	80C6	12000	5327
16.2	403	1.3	56.93	B063	90S6	12000	5327
15.5	416	1.2	90.33	B063	80B4	12000	5391
15.3	424	1.7	59.96	B083	80C6	18000	8513

5.1 B/BA GEARED MOTORS (50Hz)

0.75 kW

n2 [rpm]	M2 [Nm]	fs	i	Gear reducer	Motor	Fr2 D-S-P [N]	Fr2 C [N]
15.3	424	1.7	59.96	B083	90S6	18000	8513
15.2	424	1.7	92.19	B083	80B4	18000	8544
14.4	451	1.6	63.74	B083	80C6	18000	8666
14.4	451	1.6	63.74	B083	90S6	18000	8666
14.2	459	3.2	64.89	B103	80C6	22000	10806
14.2	459	3.2	64.89	B103	90S6	22000	10806
13.9	463	1.6	100.57	B083	80B4	18000	8763
13.8	466	1.1	101.20	B063	80B4	12000	5553
13.4	485	3.0	68.58	B103	80C6	22000	10991
13.4	485	3.0	68.58	B103	90S6	22000	10991
13.3	489	1.0	69.16	B063	80C6	12000	5603
13.3	489	1.0	69.16	B063	90S6	12000	5603
13.3	489	1.5	69.14	B083	80C6	18000	8872
13.3	489	1.5	69.14	B083	90S6	18000	8872
13.3	485	1.5	105.29	B083	80B4	18000	8879
13.3	486	3.2	105.44	B103	80B4	22000	11030
12.8	504	1.0	111.74	B063	80B4	12000	5665
12.6	518	1.4	73.14	B083	80C6	18000	9016
12.6	518	1.4	73.14	B083	90S6	18000	9016
12.6	515	2.8	72.76	B103	80C6	22000	11191
12.6	515	2.8	72.76	B103	90S6	22000	11191
12.2	529	2.9	114.80	B103	80B4	22000	11319
12.0	535	1.4	116.25	B083	80B4	18000	9135
11.7	559	2.6	78.92	B103	80C6	22000	11471
11.7	559	2.6	78.92	B103	90S6	22000	11471
11.6	554	2.8	120.42	B103	80B4	22000	11485
11.4	572	1.3	80.76	B083	80C6	18000	9273
11.4	572	1.3	80.76	B083	90S6	18000	9273
11.0	584	1.2	126.76	B083	80B4	18000	9361
11.0	592	2.6	83.66	B103	80C6	22000	11675
11.0	592	2.6	83.66	B103	90S6	22000	11675
10.5	612	2.5	132.87	B103	80B4	22000	11832
10.0	652	1.1	92.19	B083	80C6	18000	9623
10.0	652	1.1	92.19	B083	90S6	18000	9623
10.0	653	2.3	92.31	B103	80C6	22000	12026
10.0	653	2.3	92.31	B103	90S6	22000	12026
9.7	667	1.1	144.77	B083	80B4	18000	9715
9.7	666	2.3	144.69	B103	80B4	22000	12139
9.1	712	1.0	100.57	B083	80C6	18000	9857
9.1	712	1.0	100.57	B083	90S6	18000	9857
8.7	746	2.1	105.44	B103	80C6	22000	12514
8.7	746	2.1	105.44	B103	90S6	22000	12514
8.5	761	2.0	165.25	B103	80B4	22000	12630
8.0	812	1.9	114.80	B103	80C6	22000	12833
8.0	812	1.9	114.80	B103	90S6	22000	12833

5.1 B/BA GEARED MOTORS (50Hz)

0.75 kW

n2 [rpm]	M2 [Nm]	fs	i	Gear reducer	Motor	Fr2 D-S-P [N]	Fr2 C [N]
7.6	852	1.8	120.42	B103	80C6	22000	13015
7.6	852	1.8	120.42	B103	90S6	22000	13015
7.1	920	3.3	129.96	B123	90S6	30000	18750
6.9	940	1.6	132.87	B103	80C6	22000	13395
6.9	940	1.6	132.87	B103	90S6	22000	13395
6.4	1024	1.5	144.69	B103	80C6	22000	13730
6.4	1024	1.5	144.69	B103	90S6	22000	13730
6.4	1022	2.9	144.43	B123	90S6	30000	19323
5.7	1134	2.6	160.23	B123	90S6	30000	19897
5.6	1169	1.3	165.25	B103	80C6	22000	14264
5.6	1169	1.3	165.25	B103	90S6	22000	14264
5.1	1277	2.3	180.40	B123	90S6	30000	20000

0.92 kW

n2 [rpm]	M2 [Nm]	fs	i	Gear reducer	Motor	Fr2 D-S-P [N]	Fr2 C [N]
183.8	45	1.7	7.62	BA42	80C4	-	1814
176.9	47	2.9	7.91	BA52	80C4	-	1969
148.0	56	2.4	9.46	BA52	80C4	-	2090
131.8	63	1.2	10.62	BA42	80C4	-	2027
121.0	69	2.0	11.57	BA52	80C4	-	2235
95.7	87	1.6	14.63	BA52	80C4	-	2416
85.0	98	1.0	16.47	BA42	80C4	-	2346
81.8	102	1.7	17.11	BA52	80C4	-	2546
68.4	122	1.4	20.46	BA52	80C4	-	2702
55.9	149	1.1	25.03	BA52	80C4	-	2890
51.0	164	2.2	27.45	BA72	80C4	7550	3775
49.9	158	2.7	28.03	B063	80C4	12000	3825
42.4	197	1.8	33.04	BA72	80C4	8031	4016
41.9	189	2.3	33.43	B063	80C4	12000	4026
36.3	218	2.0	38.58	B063	80C4	12000	4195
35.4	224	2.7	39.60	B083	80C4	18000	6577
34.3	244	1.4	40.87	BA72	80C4	8621	4311
32.6	243	2.5	42.95	B083	80C4	18000	6741
32.4	244	1.8	43.22	B063	80C4	12000	4333
31.9	248	1.5	43.89	BA73	80C4	8828	4414
30.8	257	2.4	45.44	B083	80C4	18000	6857
30.7	272	1.1	45.64	BA72	80C4	8944	4472
27.6	287	1.8	50.81	B063	80C4	12000	4532
27.4	289	2.5	51.19	B083	80C4	18000	7106
26.5	298	1.3	52.83	BA73	80C4	9391	4696
25.2	314	2.3	55.52	B083	80C4	18000	7280
24.6	322	1.6	56.93	B063	80C4	12000	4675
23.4	339	2.1	59.96	B083	80C4	18000	7447

5.1 B/BA GEARED MOTORS (50Hz)

0.92 kW

n2 [rpm]	M2 [Nm]	fs	i	Gear reducer	Motor	Fr2 D-S-P [N]	Fr2 C [N]
22.0	360	2.0	63.74	B083	80C4	18000	7583
21.4	369	1.0	65.35	BA73	80C4	10000	5041
20.2	391	1.3	69.16	B063	80C4	12000	4924
20.2	391	1.9	69.14	B083	80C4	18000	7765
19.1	413	1.8	73.14	B083	80C4	18000	7893
18.1	438	1.2	77.48	B063	80C4	12000	5071
17.7	446	3.3	78.92	B103	80C4	22000	10020
17.3	456	1.6	80.76	B083	80C4	18000	8121
16.7	473	3.2	83.66	B103	80C4	22000	10200
15.2	521	1.4	92.19	B083	80C4	18000	8433
15.2	521	2.9	92.31	B103	80C4	22000	10509
13.9	568	1.3	100.57	B083	80C4	18000	8641
13.3	595	1.2	105.29	B083	80C4	18000	8752
13.3	596	2.6	105.44	B103	80C4	22000	10939
12.2	648	2.4	114.80	B103	80C4	22000	11221
12.0	657	1.1	116.25	B083	80C4	18000	8994
11.6	680	2.3	120.42	B103	80C4	22000	11382
11.0	716	1.0	126.76	B083	80C4	18000	9208
10.5	750	2.0	132.87	B103	80C4	22000	11718
9.7	817	1.9	144.69	B103	80C4	22000	12015
8.5	933	1.6	165.25	B103	80C4	22000	12488

1.10 kW

n2 [rpm]	M2 [Nm]	fs	i	Gear reducer	Motor	Fr2 D-S-P [N]	Fr2 C [N]
372.9	26	Ex	7.62	BA42	80B2	-	1433
300.2	32	Ex	9.46	BA52	80B2	-	1651
267.3	36	Ex	10.62	BA42	80B2	-	1601
245.4	39	Ex	11.57	BA52	80B2	-	1765
219.3	44	Ex	12.95	BA42	80B2	-	1710
196.4	49	Ex	14.46	BA42	80B2	-	1775
194.2	50	Ex	14.63	BA52	80B2	-	1909
185.1	54	1.4	7.62	BA42	80D4	-	1810
178.2	56	2.4	7.91	BA52	80D4	-	1964
176.9	56	2.4	7.91	BA52	90S4	-	1969
172.4	56	Ex	16.47	BA42	80B2	-	1853
166.0	58	Ex	17.11	BA52	80B2	-	2011
149.0	67	2.0	9.46	BA52	80D4	-	2085
148.0	67	2.0	9.46	BA52	90S4	-	2090
138.3	70	Ex	20.46	BA52	80B2	-	2137
132.7	75	1.0	10.62	BA42	80D4	-	2022
123.6	78	Ex	22.97	BA42	80B2	-	2071
121.8	82	1.7	11.57	BA52	80D4	-	2229
121.0	83	1.6	11.57	BA52	90S4	-	2235

5.1 B/BA GEARED MOTORS (50Hz)

1.10 kW

n2 [rpm]	M2 [Nm]	fs	i	Gear reducer	Motor	Fr2 D-S-P [N]	Fr2 C [N]
117.5	86	1.6	7.91	BA52	90L6	-	2256
113.5	85	Ex	25.03	BA52	80B2	-	2283
112.5	89	3.4	12.44	BA72	90S4	5800	2900
103.5	93	Ex	27.45	BA72	80B2	5964	2982
98.3	103	1.3	9.46	BA52	90L6	-	2395
96.4	104	1.3	14.63	BA52	80D4	-	2410
95.7	104	1.3	14.63	BA52	90S4	-	2416
94.4	107	2.8	10.06	BA72	100LR6	6148	3074
93.9	106	3.4	14.91	BA72	90S4	6160	3080
92.4	109	2.7	10.06	BA72	90L6	6192	3096
89.5	108	Ex	31.63	BA52	80B2	-	2471
86.0	112	Ex	33.04	BA72	80B2	6344	3172
82.4	121	1.4	17.11	BA52	80D4	-	2540
81.8	122	1.4	17.11	BA52	90S4	-	2546
80.9	119	Ex	35.10	BA52	80B2	-	2555
80.4	125	1.1	11.57	BA52	90L6	-	2561
78.0	128	2.8	17.94	BA72	90S4	6552	3276
76.3	132	2.3	12.44	BA72	100LR6	6600	3300
74.7	135	2.2	12.44	BA72	90L6	6647	3323
73.6	124	Ex	38.58	B063	80B2	11847	3385
69.5	139	Ex	40.87	BA72	80B2	6810	3405
68.9	145	1.2	20.46	BA52	80D4	-	2696
68.4	146	1.2	20.46	BA52	90S4	-	2702
65.7	139	Ex	43.22	B063	80B2	12000	3501
64.7	141	Ex	43.89	BA73	80B2	6974	3487
63.7	158	2.3	14.91	BA72	100LR6	7009	3505
63.1	158	2.3	22.19	BA72	90S4	7033	3517
63.0	150	2.9	22.39	B063	80D4	12000	3539
62.5	151	2.9	22.39	B063	90S4	12000	3546
62.4	162	2.2	14.91	BA72	90L6	7059	3530
62.2	155	Ex	45.64	BA72	80B2	7066	3533
61.3	156	2.7	15.18	B063	90L6	12000	3565
55.9	171	2.5	17.00	B063	100LR6	12000	3662
55.7	164	Ex	50.81	B063	80B2	12000	3675
55.3	165	Ex	51.19	B083	80B2	18000	5707
54.7	175	2.5	17.00	B063	90L6	12000	3685
54.0	175	2.5	26.09	B063	80D4	12000	3700
53.8	170	Ex	52.83	BA73	80B2	7419	3709
53.7	176	2.5	26.09	B063	90S4	12000	3707
52.9	190	1.9	17.94	BA72	100LR6	7456	3728
51.8	194	1.8	17.94	BA72	90L6	7509	3755
51.5	187	Ex	54.94	BA72	80B2	7525	3762
51.4	194	1.8	27.45	BA72	80D4	7532	3766
51.0	179	Ex	55.52	B083	80B2	18000	5852
51.0	196	1.8	27.45	BA72	90S4	7550	3775

5.1 B/BA GEARED MOTORS (50Hz)

1.10 kW

n2 [rpm]	M2 [Nm]	fs	i	Gear reducer	Motor	Fr2 D-S-P [N]	Fr2 C [N]
50.3	188	2.3	28.03	B063	80D4	12000	3777
49.9	189	2.3	28.03	B063	90S4	12000	3785
49.7	184	Ex	56.93	B063	80B2	12000	3798
47.4	193	Ex	59.96	B083	80B2	18000	5984
44.6	205	Ex	63.74	B083	80B2	18000	6097
44.3	213	2.9	31.80	B083	80D4	18000	6097
44.0	215	2.8	31.80	B083	90S4	18000	6110
43.3	211	Ex	65.35	BA73	80B2	7973	3986
42.8	235	1.5	22.19	BA72	100LR6	8004	4002
42.7	234	1.5	33.04	BA72	80D4	8012	4006
42.4	225	1.9	22.39	B063	100LR6	12000	3961
42.4	236	1.5	33.04	BA72	90S4	8031	4016
42.2	224	1.9	33.43	B063	80D4	12000	3971
41.9	226	1.9	33.43	B063	90S4	12000	3979
41.9	241	1.5	22.19	BA72	90L6	8061	4030
41.6	229	2.7	22.82	B083	100LR6	18000	6212
41.5	230	1.9	22.39	B063	90L6	12000	3985
40.9	223	Ex	69.16	B063	80B2	12000	4015
40.9	231	2.6	34.49	B083	80D4	18000	6249
40.9	223	Ex	69.14	B083	80B2	18000	6256
40.8	234	2.6	22.82	B083	90L6	18000	6252
40.6	233	2.6	34.49	B083	90S4	18000	6262
38.7	236	Ex	73.14	B083	80B2	18000	6363
36.6	259	1.7	38.58	B063	80D4	12000	4132
36.5	250	Ex	77.48	B063	80B2	12000	4145
36.4	262	1.6	26.09	B063	100LR6	12000	4133
36.3	261	1.7	38.58	B063	90S4	12000	4141
35.6	268	1.6	26.09	B063	90L6	12000	4158
35.6	269	2.3	26.71	B083	100LR6	18000	6512
35.6	266	2.3	39.60	B083	80D4	18000	6513
35.4	267	2.3	39.60	B083	90S4	18000	6527
35.0	260	Ex	80.76	B083	80B2	18000	6555
35.0	261	Ex	80.83	BA73	80B2	8558	4279
34.8	274	2.2	26.71	B083	90L6	18000	6554
34.6	291	1.2	27.45	BA72	100LR6	8592	4296
34.5	289	1.2	40.87	BA72	80D4	8601	4300
34.3	291	1.2	40.87	BA72	90S4	8621	4311
33.9	282	1.5	28.03	B063	100LR6	12000	4215
33.9	298	1.2	27.45	BA72	90L6	8653	4326
33.2	288	1.5	28.03	B063	90L6	12000	4240
32.8	288	2.1	42.95	B083	80D4	18000	6673
32.6	290	1.5	43.22	B063	80D4	12000	4263
32.6	290	2.1	42.95	B083	90S4	18000	6687
32.4	292	1.5	43.22	B063	90S4	12000	4271
32.2	296	2.1	29.50	B083	100LR6	18000	6707

5.1 B/BA GEARED MOTORS (50Hz)

1.10 kW

n2 [rpm]	M2 [Nm]	fs	i	Gear reducer	Motor	Fr2 D-S-P [N]	Fr2 C [N]
32.1	294	1.3	43.89	BA73	80D4	8808	4404
31.9	296	1.3	43.89	BA73	90S4	8828	4414
31.5	303	2.0	29.50	B083	90L6	18000	6749
31.3	291	Ex	90.33	B063	80B2	12000	4323
31.0	305	2.0	45.44	B083	80D4	18000	6784
30.8	307	2.0	45.44	B083	90S4	18000	6799
30.7	297	Ex	92.19	B083	80B2	18000	6819
29.9	320	1.9	31.80	B083	100LR6	18000	6857
29.2	326	1.9	31.80	B083	90L6	18000	6900
28.8	351	1.0	33.04	BA72	100LR6	9139	4570
28.4	336	1.3	33.43	B063	100LR6	12000	4419
28.4	354	1.0	33.04	BA72	90L6	9172	4586
28.1	324	Ex	100.57	B083	80B2	18000	6996
28.0	326	Ex	101.20	B063	80B2	12000	4458
27.8	343	1.3	33.43	B063	90L6	12000	4444
27.8	341	1.5	50.81	B063	80D4	12000	4452
27.6	343	1.5	50.81	B063	90S4	12000	4460
27.5	347	1.8	34.49	B083	100LR6	18000	7022
27.5	343	2.1	51.19	B083	80D4	18000	7026
27.4	346	2.1	51.19	B083	90S4	18000	7041
27.0	354	1.7	34.49	B083	90L6	18000	7066
26.9	339	Ex	105.29	B083	80B2	18000	7091
26.7	354	1.1	52.83	BA73	80D4	9369	4685
26.5	357	1.1	52.83	BA73	90S4	9391	4696
25.4	372	1.9	55.52	B083	80D4	18000	7194
25.3	360	Ex	111.74	B063	80B2	12000	4576
25.2	375	1.9	55.52	B083	90S4	18000	7209
24.8	382	1.3	56.93	B063	80D4	12000	4586
24.6	388	1.1	38.58	B063	100LR6	12000	4588
24.6	384	1.3	56.93	B063	90S4	12000	4594
24.3	375	Ex	116.25	B083	80B2	18000	7299
24.1	396	1.1	38.58	B063	90L6	12000	4613
24.0	398	1.5	39.60	B083	100LR6	18000	7309
23.5	407	1.5	39.60	B083	90L6	18000	7354
23.5	402	1.8	59.96	B083	80D4	18000	7356
23.4	405	1.8	59.96	B083	90S4	18000	7371
22.3	409	Ex	126.76	B083	80B2	18000	7483
22.1	427	1.7	63.74	B083	80D4	18000	7486
22.1	432	1.4	42.95	B083	100LR6	18000	7481
22.0	430	1.7	63.74	B083	90S4	18000	7501
21.7	441	1.4	42.95	B083	90L6	18000	7527
21.7	435	3.3	64.89	B103	80D4	22000	9356
21.6	438	3.3	64.89	B103	90S4	22000	9376
21.3	448	2.7	44.61	B103	100LR6	22000	9410
20.9	457	1.3	45.44	B083	100LR6	18000	7602

5.1 B/BA GEARED MOTORS (50Hz)

1.10 kW

n2 [rpm]	M2 [Nm]	fs	i	Gear reducer	Motor	Fr2 D-S-P [N]	Fr2 C [N]
20.8	458	2.7	44.61	B103	90L6	22000	9471
20.6	460	3.2	68.58	B103	80D4	22000	9515
20.5	467	1.3	45.44	B083	90L6	18000	7648
20.4	464	1.1	69.16	B063	80D4	12000	4817
20.4	464	1.6	69.14	B083	80D4	18000	7661
20.4	463	3.1	68.58	B103	90S4	22000	9535
20.2	467	1.1	69.16	B063	90S4	12000	4825
20.2	467	1.6	69.14	B083	90S4	18000	7677
20.1	475	2.6	47.28	B103	100LR6	22000	9578
19.7	486	2.5	47.28	B103	90L6	22000	9640
19.5	467	Ex	144.77	B083	80B2	18000	7773
19.4	488	3.0	72.76	B103	80D4	22000	9687
19.3	490	1.5	73.14	B083	80D4	18000	7784
19.2	491	3.0	72.76	B103	90S4	22000	9708
19.1	494	1.5	73.14	B083	90S4	18000	7799
18.9	505	2.9	50.24	B103	100LR6	22000	9755
18.6	515	1.4	51.19	B083	100LR6	18000	7861
18.5	516	2.8	50.24	B103	90L6	22000	9818
18.2	526	1.4	51.19	B083	90L6	18000	7908
17.9	533	2.7	53.02	B103	100LR6	22000	9914
17.9	529	2.7	78.92	B103	80D4	22000	9927
17.7	533	2.7	78.92	B103	90S4	22000	9949
17.5	542	1.3	80.76	B083	80D4	18000	8002
17.5	544	2.7	53.02	B103	90L6	22000	9978
17.3	545	1.3	80.76	B083	90S4	18000	8018
17.1	558	1.3	55.52	B083	100LR6	18000	8041
16.9	561	2.7	83.66	B103	80D4	22000	10102
16.7	570	1.3	55.52	B083	90L6	18000	8088
16.7	565	2.7	83.66	B103	90S4	22000	10124
16.2	588	2.5	58.50	B103	100LR6	22000	10211
15.9	601	2.4	58.50	B103	90L6	22000	10276
15.8	603	1.2	59.96	B083	100LR6	18000	8212
15.5	616	1.2	59.96	B083	90L6	18000	8260
15.3	618	1.2	92.19	B083	80D4	18000	8299
15.3	619	2.5	92.31	B103	80D4	22000	10403
15.2	623	1.2	92.19	B083	90S4	18000	8315
15.2	623	2.5	92.31	B103	90S4	22000	10425
14.9	641	1.1	63.74	B083	100LR6	18000	8350
14.6	654	1.1	63.74	B083	90L6	18000	8398
14.6	652	2.2	64.89	B103	100LR6	22000	10530
14.3	666	2.2	64.89	B103	90L6	22000	10596
14.0	674	1.1	100.57	B083	80D4	18000	8497
13.9	679	1.1	100.57	B083	90S4	18000	8513
13.9	689	2.1	68.58	B103	100LR6	22000	10703
13.7	695	1.0	69.14	B083	100LR6	18000	8535

5.1 B/BA GEARED MOTORS (50Hz)

1.10 kW

n2 [rpm]	M2 [Nm]	fs	i	Gear reducer	Motor	Fr2 D-S-P [N]	Fr2 C [N]
13.6	704	2.1	68.58	B103	90L6	22000	10770
13.5	710	1.0	69.14	B083	90L6	18000	8583
13.4	706	1.0	105.29	B083	80D4	18000	8601
13.4	707	2.2	105.44	B103	80D4	22000	10821
13.3	711	1.0	105.29	B083	90S4	18000	8618
13.3	712	2.2	105.44	B103	90S4	22000	10843
13.1	731	2.0	72.76	B103	100LR6	22000	10891
12.8	747	1.9	72.76	B103	90L6	22000	10959
12.3	770	2.0	114.80	B103	80D4	22000	11094
12.2	775	2.0	114.80	B103	90S4	22000	11117
12.0	793	1.8	78.92	B103	100LR6	22000	11153
11.8	810	1.8	78.92	B103	90L6	22000	11222
11.7	807	1.9	120.42	B103	80D4	22000	11249
11.6	813	1.9	120.42	B103	90S4	22000	11272
11.4	841	1.8	83.66	B103	100LR6	22000	11343
11.1	859	1.8	83.66	B103	90L6	22000	11413
10.8	878	3.4	129.96	B123	90S4	30000	16223
10.6	891	1.7	132.87	B103	80D4	22000	11574
10.5	897	1.7	132.87	B103	90S4	22000	11597
10.3	928	1.7	92.31	B103	100LR6	22000	11668
10.1	948	1.6	92.31	B103	90L6	22000	11740
9.7	970	1.6	144.69	B103	80D4	22000	11860
9.7	977	1.6	144.69	B103	90S4	22000	11884
9.7	975	3.1	144.43	B123	90S4	30000	16711
9.5	1002	3.0	99.70	B123	100LR6	30000	16778
9.0	1060	1.4	105.44	B103	100LR6	22000	12118
8.9	1072	2.8	106.65	B123	100LR6	30000	17093
8.8	1083	1.4	105.44	B103	90L6	22000	12191
8.7	1095	2.7	106.65	B123	90L6	30000	17193
8.7	1082	2.8	160.23	B123	90S4	30000	17198
8.5	1108	1.4	165.25	B103	80D4	22000	12313
8.5	1116	1.4	165.25	B103	90S4	22000	12338
8.3	1154	1.3	114.80	B103	100LR6	22000	12410
8.1	1179	1.3	114.80	B103	90L6	22000	12484
7.9	1210	1.3	120.42	B103	100LR6	22000	12576
7.9	1202	2.5	119.60	B123	100LR6	30000	17635
7.8	1228	2.4	119.60	B123	90L6	30000	17736
7.8	1218	2.5	180.40	B123	90S4	30000	17762
7.7	1236	1.2	120.42	B103	90L6	22000	12650
7.3	1306	2.3	129.96	B123	100LR6	30000	18032
7.2	1334	2.2	129.96	B123	90L6	30000	18135
7.1	1336	1.1	132.87	B103	100LR6	22000	12921
7.0	1364	1.1	132.87	B103	90L6	22000	12996
7.0	1371	3.1	136.44	B143	100LR6	40000	40000
6.6	1454	1.1	144.69	B103	100LR6	22000	13223

5.1 B/BA GEARED MOTORS (50Hz)

1.10 kW

n2 [rpm]	M2 [Nm]	fs	i	Gear reducer	Motor	Fr2 D-S-P [N]	Fr2 C [N]
6.6	1452	2.1	144.43	B123	100LR6	30000	18541
6.4	1486	1.0	144.69	B103	90L6	22000	13299
6.4	1483	2.0	144.43	B123	90L6	30000	18644
6.4	1504	2.8	149.59	B143	100LR6	40000	40000
5.9	1611	1.9	160.23	B123	100LR6	30000	19045
5.8	1645	1.8	160.23	B123	90L6	30000	19149
5.7	1674	2.6	166.53	B143	100LR6	40000	40000
5.3	1813	1.6	180.40	B123	100LR6	30000	19624
5.2	1852	1.6	180.40	B123	90L6	30000	19728
5.1	1882	2.3	187.24	B143	100LR6	40000	40000

1.50 kW

n2 [rpm]	M2 [Nm]	fs	i	Gear reducer	Motor	Fr2 D-S-P [N]	Fr2 C [N]
369.0	36	Ex	7.62	BA42	80C2	-	1438
358.9	37	Ex	7.91	BA52	90S2	-	1555
355.1	37	Ex	7.91	BA52	80C2	-	1561
300.2	44	Ex	9.46	BA52	90S2	-	1651
297.0	44	Ex	9.46	BA52	80C2	-	1657
264.5	50	Ex	10.62	BA42	80C2	-	1607
245.4	54	Ex	11.57	BA52	90S2	-	1765
242.8	54	Ex	11.57	BA52	80C2	-	1772
217.0	61	Ex	12.95	BA42	80C2	-	1716
194.2	68	Ex	14.63	BA52	90S2	-	1909
192.1	68	Ex	14.63	BA52	80C2	-	1915
179.5	76	1.8	7.91	BA52	90L4	-	1959
176.9	77	1.8	7.91	BA52	90LA4	-	1969
170.6	77	Ex	16.47	BA42	80C2	-	1860
167.1	79	Ex	17.11	BA52	90S2	-	2006
164.5	79	2.6	5.71	B063	100L6	9158	2617
164.2	80	Ex	17.11	BA52	80C2	-	2018
162.7	80	2.6	5.71	B063	100LA6	9188	2625
158.3	83	Ex	17.94	BA72	90S2	5176	2588
150.1	91	1.5	9.46	BA52	90L4	-	2080
148.0	92	1.5	9.46	BA52	90LA4	-	2090
141.2	96	3.1	10.06	BA72	90L4	5377	2689
139.2	98	3.0	10.06	BA72	90LA4	5403	2701
138.8	95	Ex	20.46	BA52	90S2	-	2135
137.3	96	Ex	20.46	BA52	80C2	-	2142
136.6	95	2.6	6.88	B063	100L6	9686	2767
135.2	96	2.5	6.88	B063	100LA6	9717	2776
128.4	101	2.5	7.32	B063	100L6	9869	2820
128.0	103	Ex	22.19	BA72	90S2	5556	2778
127.0	103	2.5	7.32	B063	100LA6	9900	2829

5.1 B/BA GEARED MOTORS (50Hz)

1.50 kW

n2 [rpm]	M2 [Nm]	fs	i	Gear reducer	Motor	Fr2 D-S-P [N]	Fr2 C [N]
122.7	111	1.2	11.57	BA52	90L4	-	2224
121.0	113	1.2	11.57	BA52	90LA4	-	2235
114.1	119	2.5	12.44	BA72	90L4	5772	2886
113.5	116	Ex	25.03	BA52	90S2	-	2283
112.5	122	2.4	8.36	BA72	100L6	5800	2900
112.5	121	2.5	12.44	BA72	90LA4	5800	2900
112.3	117	Ex	25.03	BA52	80C2	-	2291
111.3	124	2.4	8.36	BA72	100LA6	5821	2910
103.5	127	Ex	27.45	BA72	90S2	5964	2982
102.6	127	2.6	9.16	B063	100L6	10546	3013
102.4	128	Ex	27.45	BA72	80C2	5985	2993
101.5	128	2.6	9.16	B063	100LA6	10579	3023
95.3	143	2.5	14.91	BA72	90L4	6131	3065
93.9	145	2.5	14.91	BA72	90LA4	6160	3080
93.4	147	2.0	10.06	BA72	100L6	6170	3085
92.4	149	2.0	10.06	BA72	100LA6	6192	3096
91.6	142	2.6	10.26	B063	100L6	10902	3115
90.6	144	2.6	10.26	B063	100LA6	10936	3124
86.0	153	Ex	33.04	BA72	90S2	6344	3172
85.2	153	2.6	11.03	B063	100L6	11131	3180
85.0	154	Ex	33.04	BA72	80C2	6367	3183
84.9	146	Ex	33.43	B063	90S2	11173	3192
84.3	154	2.5	11.03	B063	100LA6	11165	3190
84.1	148	Ex	33.43	B063	80C2	11207	3202
83.5	154	2.8	17.00	B063	90L4	11203	3201
83.0	164	1.0	17.11	BA52	90L4	-	2534
82.3	157	2.8	17.00	B063	90LA4	11249	3214
81.8	166	1.0	17.11	BA52	90LA4	-	2546
79.1	172	2.1	17.94	BA72	90L4	6521	3261
78.0	174	2.1	17.94	BA72	90LA4	6552	3276
76.1	171	2.4	12.35	B063	100L6	11499	3286
75.5	182	1.6	12.44	BA72	100L6	6623	3312
75.3	173	2.4	12.35	B063	100LA6	11534	3296
74.7	184	1.6	12.44	BA72	100LA6	6647	3323
73.6	169	Ex	38.58	B063	90S2	11643	3327
72.8	171	Ex	38.58	B063	80C2	11679	3337
71.7	173	Ex	39.60	B083	90S2	18000	5212
71.5	182	2.3	13.15	B063	100L6	11705	3344
71.0	175	Ex	39.60	B083	80C2	18000	5229
70.7	184	2.3	13.15	B063	100LA6	11741	3354
69.5	189	Ex	40.87	BA72	90S2	6810	3405
68.8	191	Ex	40.87	BA72	80C2	6834	3417
66.1	188	Ex	42.95	B083	90S2	18000	5343
65.7	189	Ex	43.22	B063	90S2	12000	3436
65.4	190	Ex	42.95	B083	80C2	18000	5360

5.1 B/BA GEARED MOTORS (50Hz)

1.50 kW

n2 [rpm]	M2 [Nm]	fs	i	Gear reducer	Motor	Fr2 D-S-P [N]	Fr2 C [N]
65.0	191	Ex	43.22	B063	80C2	12000	3446
64.7	192	Ex	43.89	BA73	90S2	6974	3487
64.0	213	1.7	22.19	BA72	90L4	7000	3500
64.0	194	Ex	43.89	BA73	80C2	6999	3499
63.4	203	2.1	22.39	B063	90L4	12000	3461
63.1	218	1.6	14.91	BA72	100L6	7034	3517
63.1	216	1.7	22.19	BA72	90LA4	7033	3517
62.5	206	2.1	22.39	B063	90LA4	12000	3475
62.5	199	Ex	45.44	B083	90S2	18000	5434
62.4	220	1.6	14.91	BA72	100LA6	7059	3530
62.2	211	Ex	45.64	BA72	90S2	7066	3533
61.9	210	2.0	15.18	B063	100L6	12000	3481
61.8	201	Ex	45.44	B083	80C2	18000	5452
61.6	213	Ex	45.64	BA72	80C2	7091	3545
61.3	212	2.0	15.18	B063	100LA6	12000	3492
56.6	230	2.7	16.60	B083	100L6	18000	5586
56.0	232	2.6	16.60	B083	100LA6	18000	5603
55.9	223	Ex	50.81	B063	90S2	12000	3595
55.5	224	Ex	51.19	B083	90S2	18000	5632
55.3	236	1.8	17.00	B063	100L6	12000	3592
55.3	225	Ex	50.81	B063	80C2	12000	3605
54.9	227	Ex	51.19	B083	80C2	18000	5650
54.7	238	1.8	17.00	B063	100LA6	12000	3603
54.4	237	1.8	26.09	B063	90L4	12000	3611
53.8	231	Ex	52.83	BA73	90S2	7419	3709
53.7	240	1.8	26.09	B063	90LA4	12000	3625
53.2	243	2.5	26.71	B083	90L4	18000	5695
53.2	234	Ex	52.83	BA73	80C2	7445	3723
52.4	246	2.5	26.71	B083	90LA4	18000	5719
52.4	262	1.4	17.94	BA72	100L6	7483	3741
51.8	265	1.4	17.94	BA72	100LA6	7509	3755
51.7	263	1.4	27.45	BA72	90L4	7514	3757
51.3	254	2.4	18.32	B083	100L6	18000	5752
51.1	243	Ex	55.52	B083	90S2	18000	5770
51.0	267	1.3	27.45	BA72	90LA4	7550	3775
50.8	257	2.4	18.32	B083	100LA6	18000	5771
50.7	255	1.7	28.03	B063	90L4	12000	3682
50.6	246	Ex	55.52	B083	80C2	18000	5789
49.9	258	1.7	28.03	B063	90LA4	12000	3696
49.9	249	Ex	56.93	B063	90S2	12000	3709
49.4	252	Ex	56.93	B063	80C2	12000	3719
48.1	268	2.3	29.50	B083	90L4	18000	5864
47.5	272	2.2	29.50	B083	90LA4	18000	5889
47.4	263	Ex	59.96	B083	90S2	18000	5903
46.9	265	Ex	59.96	B083	80C2	18000	5922

5.1 B/BA GEARED MOTORS (50Hz)

1.50 kW

n2 [rpm]	M2 [Nm]	fs	i	Gear reducer	Motor	Fr2 D-S-P [N]	Fr2 C [N]
44.7	289	2.1	31.80	B083	90L4	18000	5995
44.6	279	Ex	63.74	B083	90S2	18000	6011
44.1	282	Ex	63.74	B083	80C2	18000	6030
44.0	293	2.1	31.80	B083	90LA4	18000	6020
43.5	286	Ex	65.35	BA73	90S2	7964	3982
43.0	317	1.1	33.04	BA72	90L4	7993	3997
43.0	289	Ex	65.35	BA73	80C2	7992	3996
42.5	304	1.4	33.43	B063	90L4	12000	3859
42.4	325	1.1	22.19	BA72	100L6	8032	4016
42.4	321	1.1	33.04	BA72	90LA4	8031	4016
42.0	310	1.4	22.39	B063	100L6	12000	3867
41.9	308	1.4	33.43	B063	90LA4	12000	3873
41.9	328	1.1	22.19	BA72	100LA6	8061	4030
41.5	314	1.4	22.39	B063	100LA6	12000	3877
41.2	316	1.9	22.82	B083	100L6	18000	6134
41.2	313	1.9	34.49	B083	90L4	18000	6139
41.1	303	Ex	69.16	B063	90S2	12000	3907
41.1	303	Ex	69.14	B083	90S2	18000	6156
40.8	319	1.9	22.82	B083	100LA6	18000	6153
40.6	306	Ex	69.16	B063	80C2	12000	3918
40.6	318	1.9	34.49	B083	90LA4	18000	6164
40.6	306	Ex	69.14	B083	80C2	18000	6175
38.8	320	Ex	73.14	B083	90S2	18000	6257
38.4	324	Ex	73.14	B083	80C2	18000	6277
36.8	350	1.2	38.58	B063	90L4	12000	4004
36.7	339	Ex	77.48	B063	90S2	12000	4024
36.3	355	1.2	38.58	B063	90LA4	12000	4018
36.3	343	Ex	77.48	B063	80C2	12000	4035
36.0	361	1.2	26.09	B063	100L6	12000	4021
35.9	360	1.7	39.60	B083	90L4	18000	6388
35.6	365	1.2	26.09	B063	100LA6	12000	4032
35.4	365	1.7	39.60	B083	90LA4	18000	6414
35.2	370	1.6	26.71	B083	100L6	18000	6419
35.2	354	Ex	80.76	B083	90S2	18000	6439
34.8	358	Ex	80.76	B083	80C2	18000	6459
34.8	374	1.6	26.71	B083	100LA6	18000	6439
33.5	388	1.1	28.03	B063	100L6	12000	4094
33.2	392	1.1	28.03	B063	100LA6	12000	4105
33.1	390	1.6	42.95	B083	90L4	18000	6538
32.9	392	1.1	43.22	B063	90L4	12000	4120
32.6	396	1.5	42.95	B083	90LA4	18000	6565
32.4	398	1.1	43.22	B063	90LA4	12000	4134
31.9	409	1.5	29.50	B083	100L6	18000	6602
31.5	413	1.5	29.50	B083	100LA6	18000	6622
31.3	413	1.5	45.44	B083	90L4	18000	6643

5.1 B/BA GEARED MOTORS (50Hz)

1.50 kW

n2 [rpm]	M2 [Nm]	fs	i	Gear reducer	Motor	Fr2 D-S-P [N]	Fr2 C [N]
31.1	400	Ex	90.33	B063	80C2	12000	4194
30.8	418	1.5	45.44	B083	90LA4	18000	6670
30.8	404	Ex	92.19	B083	90S2	18000	6687
30.8	423	2.7	30.55	B103	100L6	22000	8313
30.5	408	Ex	92.19	B083	80C2	18000	6707
30.4	428	2.7	30.55	B103	100LA6	22000	8340
30.0	429	2.9	47.28	B103	90L4	22000	8377
29.6	440	1.4	31.80	B083	100L6	18000	6743
29.6	435	2.8	47.28	B103	90LA4	22000	8413
29.2	445	1.4	31.80	B083	100LA6	18000	6763
28.4	458	2.7	33.07	B103	100L6	22000	8513
28.3	456	3.2	50.24	B103	90L4	22000	8532
28.2	441	Ex	100.57	B083	90S2	18000	6853
28.1	463	2.6	33.07	B103	100LA6	22000	8541
27.9	461	1.1	50.81	B063	90L4	12000	4285
27.9	445	Ex	100.57	B083	80C2	18000	6873
27.9	463	3.1	50.24	B103	90LA4	22000	8568
27.7	465	1.6	51.19	B083	90L4	18000	6868
27.6	468	1.1	50.81	B063	90LA4	12000	4299
27.4	471	1.5	51.19	B083	90LA4	18000	6895
27.3	478	1.3	34.49	B083	100L6	18000	6897
27.0	483	1.3	34.49	B083	100LA6	18000	6917
27.0	461	Ex	105.29	B083	90S2	18000	6941
26.8	481	3.0	53.02	B103	90L4	22000	8671
26.7	466	Ex	105.29	B083	80C2	18000	6962
26.4	488	3.0	53.02	B103	90LA4	22000	8708
26.2	497	2.5	35.87	B103	100L6	22000	8723
25.9	502	2.4	35.87	B103	100LA6	22000	8751
25.6	504	1.4	55.52	B083	90L4	18000	7024
25.2	511	1.4	55.52	B083	90LA4	18000	7052
24.4	509	Ex	116.25	B083	90S2	18000	7134
24.3	531	2.7	58.50	B103	90L4	22000	8929
24.2	515	Ex	116.25	B083	80C2	18000	7155
23.9	539	2.7	58.50	B103	90LA4	22000	8967
23.7	544	1.3	59.96	B083	90L4	18000	7173
23.7	549	1.1	39.60	B083	100L6	18000	7162
23.5	554	1.1	39.60	B083	100LA6	18000	7183
23.4	552	1.3	59.96	B083	90LA4	18000	7201
22.9	570	2.2	41.12	B103	100L6	22000	9085
22.6	576	2.1	41.12	B103	100LA6	22000	9114
22.4	555	Ex	126.76	B083	90S2	18000	7305
22.3	579	1.3	63.74	B083	90L4	18000	7293
22.2	561	Ex	126.76	B083	80C2	18000	7326
22.0	587	1.2	63.74	B083	90LA4	18000	7320
21.9	595	1.0	42.95	B083	100L6	18000	7321

5.1 B/BA GEARED MOTORS (50Hz)

1.50 kW

n2 [rpm]	M2 [Nm]	fs	i	Gear reducer	Motor	Fr2 D-S-P [N]	Fr2 C [N]
21.9	589	2.5	64.89	B103	90L4	22000	9207
21.7	601	1.0	42.95	B083	100LA6	18000	7342
21.6	598	2.4	64.89	B103	90LA4	22000	9245
21.1	618	2.0	44.61	B103	100L6	22000	9305
20.8	625	2.0	44.61	B103	100LA6	22000	9334
20.7	623	2.3	68.58	B103	90L4	22000	9358
20.5	628	1.2	69.14	B083	90L4	18000	7452
20.4	632	2.3	68.58	B103	90LA4	22000	9397
20.2	637	1.1	69.14	B083	90LA4	18000	7480
19.9	655	1.9	47.28	B103	100L6	22000	9465
19.7	662	1.9	47.28	B103	100LA6	22000	9495
19.5	661	2.2	72.76	B103	90L4	22000	9521
19.4	664	1.1	73.14	B083	90L4	18000	7564
19.2	670	2.2	72.76	B103	90LA4	22000	9561
19.1	674	1.1	73.14	B083	90LA4	18000	7592
18.7	696	2.1	50.24	B103	100L6	22000	9634
18.5	703	2.1	50.24	B103	100LA6	22000	9663
18.4	709	1.0	51.19	B083	100L6	18000	7666
18.2	717	1.0	51.19	B083	100LA6	18000	7687
18.0	717	2.0	78.92	B103	90L4	22000	9749
17.7	734	2.0	53.02	B103	100L6	22000	9785
17.7	727	2.0	78.92	B103	90LA4	22000	9789
17.5	742	2.0	53.02	B103	100LA6	22000	9815
17.0	760	2.0	83.66	B103	90L4	22000	9915
16.7	770	2.0	83.66	B103	90LA4	22000	9955
16.1	810	1.8	58.50	B103	100L6	22000	10065
15.9	819	1.8	58.50	B103	100LA6	22000	10096
15.4	838	1.8	92.31	B103	90L4	22000	10198
15.2	850	1.8	92.31	B103	90LA4	22000	10239
15.0	867	3.3	62.59	B123	100L6	30000	14432
14.9	876	3.2	62.59	B123	100LA6	30000	14475
14.5	899	1.6	64.89	B103	100L6	22000	10366
14.3	908	1.6	64.89	B103	100LA6	22000	10397
13.7	950	1.5	68.58	B103	100L6	22000	10528
13.6	960	1.5	68.58	B103	100LA6	22000	10560
13.5	957	1.6	105.44	B103	90L4	22000	10589
13.5	962	2.9	69.43	B123	100L6	30000	14851
13.4	972	2.9	69.43	B123	100LA6	30000	14894
13.3	971	1.6	105.44	B103	90LA4	22000	10631
13.3	968	3.1	106.65	B123	90L4	30000	14931
13.1	982	3.0	106.65	B123	90LA4	30000	14989
12.9	1008	1.4	72.76	B103	100L6	22000	10704
12.8	1019	1.4	72.76	B103	100LA6	22000	10736
12.6	1031	2.9	74.42	B123	100L6	30000	15133
12.5	1042	2.9	74.42	B123	100LA6	30000	15177

5.1 B/BA GEARED MOTORS (50Hz)

1.50 kW

n2 [rpm]	M2 [Nm]	fs	i	Gear reducer	Motor	Fr2 D-S-P [N]	Fr2 C [N]
12.4	1042	1.5	114.80	B103	90L4	22000	10842
12.2	1057	1.5	114.80	B103	90LA4	22000	10885
11.9	1093	1.3	78.92	B103	100L6	22000	10947
11.9	1086	2.8	119.60	B123	90L4	30000	15401
11.8	1105	1.3	78.92	B103	100LA6	22000	10980
11.8	1093	1.4	120.42	B103	90L4	22000	10986
11.7	1109	2.7	80.04	B123	100L6	30000	15432
11.7	1101	2.7	119.60	B123	90LA4	30000	15460
11.6	1109	1.4	120.42	B103	90LA4	22000	11029
11.6	1121	2.7	80.04	B123	100LA6	30000	15476
11.2	1159	1.3	83.66	B103	100L6	22000	11123
11.1	1171	1.3	83.66	B103	100LA6	22000	11156
10.9	1180	2.5	129.96	B123	90L4	30000	15745
10.8	1197	2.5	129.96	B123	90LA4	30000	15804
10.7	1206	1.3	132.87	B103	90L4	22000	11286
10.5	1224	1.3	132.87	B103	90LA4	22000	11329
10.5	1245	2.4	89.87	B123	100L6	30000	15911
10.3	1258	2.4	89.87	B123	100LA6	30000	15955
10.2	1279	1.2	92.31	B103	100L6	22000	11424
10.1	1292	1.2	92.31	B103	100LA6	22000	11456
9.9	1318	3.2	94.13	B143	100LA6	40000	40000
9.8	1314	1.2	144.69	B103	90L4	22000	11548
9.8	1311	2.3	144.43	B123	90L4	30000	16186
9.7	1332	1.2	144.69	B103	90LA4	22000	11592
9.7	1330	2.2	144.43	B123	90LA4	30000	16245
9.4	1381	2.2	99.70	B123	100L6	30000	16343
9.3	1396	2.1	99.70	B123	100LA6	30000	16388
8.9	1461	1.1	105.44	B103	100L6	22000	11834
8.9	1455	2.1	160.23	B123	90L4	30000	16621
8.9	1466	2.9	105.83	B143	100L6	40000	40000
8.8	1476	1.0	105.44	B103	100LA6	22000	11867
8.8	1477	2.0	106.65	B123	100L6	30000	16626
8.8	1482	2.9	105.83	B143	100LA6	40000	40000
8.7	1493	2.0	106.65	B123	100LA6	30000	16670
8.7	1476	2.0	160.23	B123	90LA4	30000	16681
8.6	1500	1.0	165.25	B103	90L4	22000	11960
8.5	1522	1.0	165.25	B103	90LA4	22000	12005
8.4	1551	2.8	111.94	B143	100L6	40000	40000
8.3	1567	2.7	111.94	B143	100LA6	40000	40000
7.9	1638	1.8	180.40	B123	90L4	30000	17121
7.9	1657	1.8	119.60	B123	100L6	30000	17105
7.8	1675	1.8	119.60	B123	100LA6	30000	17150
7.8	1661	1.8	180.40	B123	90LA4	30000	17180
7.5	1726	2.5	124.62	B143	100L6	40000	40000
7.5	1745	2.4	124.62	B143	100LA6	40000	40000

5.1 B/BA GEARED MOTORS (50Hz)

1.50 kW

n2 [rpm]	M2 [Nm]	fs	i	Gear reducer	Motor	Fr2 D-S-P [N]	Fr2 C [N]
7.2	1800	1.7	129.96	B123	100L6	30000	17453
7.2	1820	1.6	129.96	B123	100LA6	30000	17497
6.9	1890	2.3	136.44	B143	100L6	40000	40000
6.8	1910	2.2	136.44	B143	100LA6	40000	40000
6.5	2001	1.5	144.43	B123	100L6	30000	17892
6.4	2022	1.5	144.43	B123	100LA6	30000	17936
6.3	2072	2.1	149.59	B143	100L6	40000	40000
6.2	2094	2.0	149.59	B143	100LA6	40000	40000
5.9	2220	1.3	160.23	B123	100L6	30000	18320
5.8	2243	1.3	160.23	B123	100LA6	30000	18363
5.6	2307	1.9	166.53	B143	100L6	40000	40000
5.6	2332	1.8	166.53	B143	100LA6	40000	40000
5.2	2499	1.2	180.40	B123	100L6	30000	18800
5.2	2526	1.2	180.40	B123	100LA6	30000	18843
5.0	2594	1.6	187.24	B143	100L6	40000	40000
5.0	2622	1.6	187.24	B143	100LA6	40000	40000

1.85 kW

n2 [rpm]	M2 [Nm]	fs	i	Gear reducer	Motor	Fr2 D-S-P [N]	Fr2 C [N]
176.9	95	1.4	7.91	BA52	90LB4	-	1969
167.5	100	3.0	8.36	BA72	90LB4	5079	2540
162.7	99	2.1	5.71	B063	100LB6	9103	2601
148.0	113	1.2	9.46	BA52	90LB4	-	2090
139.2	121	2.5	10.06	BA72	90LB4	5403	2701
135.2	119	2.1	6.88	B063	100LB6	9615	2747
127.0	126	2.0	7.32	B063	100LB6	9792	2798
119.1	135	2.7	7.81	B083	100LB6	15480	4423
112.5	149	2.0	12.44	BA72	90LB4	5800	2900
111.3	152	2.0	8.36	BA72	100LB6	5821	2910
106.5	149	2.9	13.15	B063	90LB4	10310	2946
101.5	158	2.1	9.16	B063	100LB6	10444	2984
93.9	179	2.0	14.91	BA72	90LB4	6160	3080
92.4	183	1.6	10.06	BA72	100LB6	6192	3096
92.3	172	2.5	15.18	B063	90LB4	10738	3068
90.6	177	2.1	10.26	B063	100LB6	10784	3081
88.6	181	2.6	10.49	B083	100LB6	16934	4838
84.3	190	2.0	11.03	B063	100LB6	11002	3144
82.3	193	2.2	17.00	B063	90LB4	11084	3167
80.3	200	2.7	11.59	B083	100LB6	17445	4984
78.0	215	1.7	17.94	BA72	90LB4	6552	3276
75.3	213	2.0	12.35	B063	100LB6	11352	3244
74.7	227	1.3	12.44	BA72	100LB6	6647	3323
70.7	227	1.9	13.15	B063	100LB6	11547	3299

5.1 B/BA GEARED MOTORS (50Hz)

1.85 kW

n2 [rpm]	M2 [Nm]	fs	i	Gear reducer	Motor	Fr2 D-S-P [N]	Fr2 C [N]
64.5	249	2.3	14.43	B083	100LB6	18000	5319
63.1	266	1.3	22.19	BA72	90LB4	7033	3517
62.5	254	1.7	22.39	B063	90LB4	11945	3413
62.4	272	1.3	14.91	BA72	100LB6	7059	3530
61.4	259	2.4	22.82	B083	90LB4	18000	5399
61.3	262	1.6	15.18	B063	100LB6	11997	3428
56.0	287	2.1	16.60	B083	100LB6	18000	5541
54.7	294	1.5	17.00	B063	100LB6	12000	3531
53.7	296	1.5	26.09	B063	90LB4	12000	3552
52.4	303	2.0	26.71	B083	90LB4	18000	5653
51.8	327	1.1	17.94	BA72	100LB6	7509	3755
51.0	329	1.1	27.45	BA72	90LB4	7550	3775
50.8	316	1.9	18.32	B083	100LB6	18000	5701
49.9	318	1.4	28.03	B063	90LB4	12000	3618
47.5	335	1.8	29.50	B083	90LB4	18000	5816
44.0	361	1.7	31.80	B083	90LB4	18000	5941
41.9	380	1.1	33.43	B063	90LB4	12000	3780
41.5	387	1.1	22.39	B063	100LB6	12000	3783
40.8	394	1.5	22.82	B083	100LB6	18000	6067
40.6	392	1.6	34.49	B083	90LB4	18000	6079
39.2	409	2.5	23.70	B103	100LB6	22000	7656
35.4	450	1.4	39.60	B083	90LB4	18000	6316
35.1	458	2.4	26.51	B103	100LB6	22000	7918
34.8	461	1.3	26.71	B083	100LB6	18000	6338
34.0	467	2.6	41.12	B103	90LB4	22000	7992
32.6	488	1.3	42.95	B083	90LB4	18000	6458
31.5	509	1.2	29.50	B083	100LB6	18000	6511
31.4	507	2.4	44.61	B103	90LB4	22000	8188
30.8	516	1.2	45.44	B083	90LB4	18000	6557
30.4	528	2.2	30.55	B103	100LB6	22000	8258
29.6	537	2.3	47.28	B103	90LB4	22000	8330
29.2	549	1.1	31.80	B083	100LB6	18000	6643
28.1	571	2.1	33.07	B103	100LB6	22000	8452
27.9	571	2.5	50.24	B103	90LB4	22000	8479
27.4	581	1.2	51.19	B083	90LB4	18000	6768
27.0	596	1.0	34.49	B083	100LB6	18000	6787
26.4	602	2.4	53.02	B103	90LB4	22000	8614
25.9	619	2.0	35.87	B103	100LB6	22000	8655
25.2	631	1.1	55.52	B083	90LB4	18000	6914
23.9	664	2.2	58.50	B103	90LB4	22000	8863
23.4	681	1.1	59.96	B083	90LB4	18000	7052
22.6	710	1.7	41.12	B103	100LB6	22000	9003
22.0	724	1.0	63.74	B083	90LB4	18000	7162
21.6	737	2.0	64.89	B103	90LB4	22000	9131
20.8	770	1.6	44.61	B103	100LB6	22000	9215

5.1 B/BA GEARED MOTORS (50Hz)

1.85 kW

n2 [rpm]	M2 [Nm]	fs	i	Gear reducer	Motor	Fr2 D-S-P [N]	Fr2 C [N]
20.4	779	1.9	68.58	B103	90LB4	22000	9276
19.7	817	1.5	47.28	B103	100LB6	22000	9368
19.2	826	1.8	72.76	B103	90LB4	22000	9432
18.7	860	2.7	49.80	B123	100LB6	30000	13362
18.5	868	1.7	50.24	B103	100LB6	22000	9529
17.7	896	1.6	78.92	B103	90LB4	22000	9650
17.5	916	1.6	53.02	B103	100LB6	22000	9673
17.5	909	3.3	80.04	B123	90LB4	30000	13614
17.1	938	2.9	54.30	B123	100LB6	30000	13679
16.7	950	1.6	83.66	B103	90LB4	22000	9807
15.9	1010	1.4	58.50	B103	100LB6	22000	9939
15.7	1025	2.7	59.36	B123	100LB6	30000	14009
15.2	1048	1.5	92.31	B103	90LB4	22000	10076
14.9	1081	2.6	62.59	B123	100LB6	30000	14207
14.3	1120	1.3	64.89	B103	100LB6	22000	10223
13.6	1184	1.2	68.58	B103	100LB6	22000	10376
13.4	1199	2.3	69.43	B123	100LB6	30000	14596
13.3	1198	1.3	105.44	B103	90LB4	22000	10445
13.1	1211	2.5	106.65	B123	90LB4	30000	14688
12.8	1256	1.2	72.76	B103	100LB6	22000	10540
12.5	1285	2.3	74.42	B123	100LB6	30000	14857
12.2	1304	1.2	114.80	B103	90LB4	22000	10682
12.1	1332	3.2	77.12	B143	100LB6	40000	40000
11.8	1363	1.1	78.92	B103	100LB6	22000	10768
11.7	1358	2.2	119.60	B123	90LB4	30000	15122
11.6	1368	1.1	120.42	B103	90LB4	22000	10817
11.6	1382	2.2	80.04	B123	100LB6	30000	15132
11.1	1445	1.1	83.66	B103	100LB6	22000	10931
10.9	1477	2.9	85.54	B143	100LB6	40000	40000
10.8	1476	2.0	129.96	B123	90LB4	30000	15438
10.5	1509	1.0	132.87	B103	90LB4	22000	11095
10.3	1552	1.9	89.87	B123	100LB6	30000	15570
9.9	1625	2.6	94.13	B143	100LB6	40000	40000
9.7	1640	1.8	144.43	B123	90LB4	30000	15838
9.3	1722	1.7	99.70	B123	100LB6	30000	15960
8.8	1828	2.3	105.83	B143	100LB6	40000	40000
8.7	1820	1.6	160.23	B123	90LB4	30000	16229
8.7	1842	1.6	106.65	B123	100LB6	30000	16213
8.3	1933	2.2	111.94	B143	100LB6	40000	40000
7.8	2065	1.4	119.60	B123	100LB6	30000	16637
7.8	2049	1.5	180.40	B123	90LB4	30000	16671
7.5	2152	2.0	124.62	B143	100LB6	40000	40000
7.2	2244	1.3	129.96	B123	100LB6	30000	16940
6.8	2356	1.8	136.44	B143	100LB6	40000	40000
6.4	2494	1.2	144.43	B123	100LB6	30000	17317

5.1 B/BA GEARED MOTORS (50Hz)

1.85 kW

n2 [rpm]	M2 [Nm]	fs	i	Gear reducer	Motor	Fr2 D-S-P [N]	Fr2 C [N]
6.2	2583	1.7	149.59	B143	100LB6	40000	40000
5.8	2767	1.1	160.23	B123	100LB6	30000	17676
5.6	2876	1.5	166.53	B143	100LB6	40000	40000
5.0	3233	1.3	187.24	B143	100LB6	40000	40000

2.20 kW

n2 [rpm]	M2 [Nm]	fs	i	Gear reducer	Motor	Fr2 D-S-P [N]	Fr2 C [N]
364.0	53	Ex	7.91	BA52	90L2	-	1548
302.3	64	Ex	9.46	BA52	90L2	-	1647
284.3	68	Ex	10.06	BA72	90L2	4258	2129
255.5	74	2.8	5.71	B063	112MR4	7894	2256
250.2	76	2.8	5.71	B063	100LA4	7944	2270
247.1	78	Ex	11.57	BA52	90L2	-	1761
229.9	84	Ex	12.44	BA72	90L2	4571	2285
212.2	89	2.7	6.88	B063	112MR4	8346	2384
206.4	92	2.7	6.88	B063	100LA4	8415	2404
199.4	95	2.7	7.32	B063	112MR4	8502	2429
196.9	98	Ex	14.63	BA52	90L2	-	1900
193.9	98	2.6	7.32	B063	100LA4	8572	2449
193.2	100	Ex	14.91	BA72	90L2	4843	2422
174.7	114	2.6	8.36	BA72	112MR4	5008	2504
171.1	117	2.6	8.36	BA72	100LA4	5043	2522
168.0	114	1.8	5.71	B063	112M6	8936	2553
167.1	115	Ex	17.11	BA52	90L2	-	2006
162.7	117	1.8	5.71	B063	112MA6	9019	2577
159.4	119	2.6	9.16	B063	112MR4	9079	2594
159.4	121	Ex	17.94	BA72	90L2	5164	2582
155.0	122	2.6	9.16	B063	100LA4	9153	2615
145.1	138	2.2	10.06	BA72	112MR4	5328	2664
142.3	133	2.5	10.26	B063	112MR4	9382	2681
141.2	141	2.1	10.06	BA72	100LA4	5377	2689
139.5	137	1.8	6.88	B063	112M6	9428	2694
138.4	137	2.5	10.26	B063	100LA4	9457	2702
135.2	141	1.7	6.88	B063	112MA6	9514	2718
132.4	143	2.7	11.03	B063	112MR4	9577	2736
131.1	146	1.7	7.32	B063	112M6	9597	2742
128.9	149	Ex	22.19	BA72	90L2	5543	2772
128.8	147	2.7	11.03	B063	100LA4	9653	2758
127.0	150	1.7	7.32	B063	112MA6	9684	2767
122.9	155	2.3	7.81	B083	112M6	15230	4352
119.1	160	2.2	7.81	B083	112MA6	15377	4393
118.2	160	2.5	12.35	B063	112MR4	9890	2826
117.3	170	1.8	12.44	BA72	112MR4	5719	2860

5.1 B/BA GEARED MOTORS (50Hz)

2.20 kW

n2 [rpm]	M2 [Nm]	fs	i	Gear reducer	Motor	Fr2 D-S-P [N]	Fr2 C [N]
114.9	165	2.5	12.35	B063	100LA4	9967	2848
114.9	175	1.7	8.36	BA72	112M6	5760	2880
114.1	175	1.7	12.44	BA72	100LA4	5772	2886
111.3	172	2.5	8.62	B083	112M6	15692	4483
111.3	181	1.6	8.36	BA72	112MA6	5821	2910
111.0	170	2.5	13.15	B063	112MR4	10065	2876
108.0	175	2.4	13.15	B063	100LA4	10143	2898
107.9	177	2.4	8.62	B083	112MA6	15842	4526
104.8	182	1.8	9.16	B063	112M6	10219	2920
104.2	185	Ex	27.45	BA72	90L2	5950	2975
101.5	188	1.8	9.16	B063	112MA6	10309	2945
97.9	204	1.8	14.91	BA72	112MR4	6074	3037
97.0	188	Ex	29.50	B083	90L2	16389	4683
96.2	197	2.2	15.18	B063	112MR4	10470	2992
95.4	211	1.4	10.06	BA72	112M6	6127	3063
95.3	210	1.7	14.91	BA72	100LA4	6131	3065
93.6	202	2.1	15.18	B063	100LA4	10550	3014
93.5	204	1.8	10.26	B063	112M6	10542	3012
92.4	218	1.4	10.06	BA72	112MA6	6192	3096
91.5	209	2.2	10.49	B083	112M6	16639	4754
90.6	211	1.8	10.26	B063	112MA6	10633	3038
89.9	203	Ex	31.80	B083	90L2	16760	4789
88.6	216	2.2	10.49	B083	112MA6	16795	4799
88.0	215	2.8	16.60	B083	112MR4	16840	4812
87.1	219	1.8	11.03	B063	112M6	10748	3071
86.6	223	Ex	33.04	BA72	90L2	6329	3165
85.9	220	2.0	17.00	B063	112MR4	10798	3085
85.6	221	2.8	16.60	B083	100LA4	16979	4851
85.5	213	Ex	33.43	B063	90L2	10844	3098
84.3	226	1.7	11.03	B063	112MA6	10840	3097
83.5	226	1.9	17.00	B063	100LA4	10878	3108
82.9	231	2.3	11.59	B083	112M6	17132	4895
82.9	220	Ex	34.49	B083	90L2	17169	4905
81.4	245	1.5	17.94	BA72	112MR4	6461	3231
80.3	238	2.3	11.59	B083	112MA6	17292	4941
79.7	237	2.6	18.32	B083	112MR4	17339	4954
79.1	252	1.4	17.94	BA72	100LA4	6521	3261
77.7	246	1.7	12.35	B063	112M6	11078	3165
77.5	244	2.5	18.32	B083	100LA4	17480	4994
77.2	261	1.1	12.44	BA72	112M6	6577	3288
75.3	254	1.6	12.35	B063	112MA6	11170	3191
74.7	270	1.1	12.44	BA72	112MA6	6647	3323
74.1	246	Ex	38.58	B063	90L2	11266	3219
73.0	262	1.6	13.15	B063	112M6	11260	3217
72.2	253	Ex	39.60	B083	90L2	17879	5108

5.1 B/BA GEARED MOTORS (50Hz)

2.20 kW

n2 [rpm]	M2 [Nm]	fs	i	Gear reducer	Motor	Fr2 D-S-P [N]	Fr2 C [N]
70.7	270	1.6	13.15	B063	112MA6	11353	3244
66.6	274	Ex	42.95	B083	90L2	18000	5230
66.5	287	2.0	14.43	B083	112M6	18000	5217
66.2	276	Ex	43.22	B063	90L2	11606	3316
65.8	303	1.2	22.19	BA72	112MR4	6936	3468
65.2	290	1.5	22.39	B063	112MR4	11604	3316
65.2	280	Ex	43.89	BA73	90L2	6958	3479
64.5	296	2.0	14.43	B083	112MA6	18000	5265
64.4	313	1.1	14.91	BA72	112M6	6985	3493
64.0	296	2.1	22.82	B083	112MR4	18000	5279
64.0	312	1.1	22.19	BA72	100LA4	7000	3500
63.4	298	1.4	22.39	B063	100LA4	11686	3339
63.3	302	1.4	15.18	B063	112M6	11680	3337
62.9	290	Ex	45.44	B083	90L2	18000	5316
62.4	323	1.1	14.91	BA72	112MA6	7059	3530
62.2	304	2.0	22.82	B083	100LA4	18000	5321
61.3	312	1.4	15.18	B063	112MA6	11773	3364
57.8	330	1.8	16.60	B083	112M6	18000	5429
56.5	338	1.3	17.00	B063	112M6	12000	3433
56.3	324	Ex	50.81	B063	90L2	12000	3455
56.0	338	1.3	26.09	B063	112MR4	12000	3445
56.0	341	1.8	16.60	B083	112MA6	18000	5478
55.9	327	Ex	51.19	B083	90L2	18000	5500
54.7	349	1.2	17.00	B063	112MA6	12000	3459
54.7	346	1.8	26.71	B083	112MR4	18000	5521
54.4	347	1.2	26.09	B063	100LA4	12000	3468
53.2	356	1.7	26.71	B083	100LA4	18000	5564
52.4	365	1.7	18.32	B083	112M6	18000	5583
52.1	363	1.2	28.03	B063	112MR4	12000	3505
51.5	354	Ex	55.52	B083	90L2	18000	5628
50.8	376	1.6	18.32	B083	112MA6	18000	5632
50.7	373	1.2	28.03	B063	100LA4	12000	3529
50.4	379	2.7	19.06	B103	112M6	22000	7048
50.2	363	Ex	56.93	B063	90L2	12000	3553
49.5	382	1.6	29.50	B083	112MR4	18000	5676
48.8	391	2.6	19.06	B103	112MA6	22000	7116
48.1	393	1.6	29.50	B083	100LA4	18000	5720
47.7	383	Ex	59.96	B083	90L2	18000	5750
46.5	407	2.8	30.55	B103	100LA4	22000	7224
45.9	412	1.5	31.80	B083	112MR4	18000	5795
44.9	407	Ex	63.74	B083	90L2	18000	5849
44.7	423	1.4	31.80	B083	100LA4	18000	5839
44.2	428	2.9	33.07	B103	112MR4	22000	7336
42.9	440	2.8	33.07	B103	100LA4	22000	7396
42.3	447	1.4	34.49	B083	112MR4	18000	5925

5.1 B/BA GEARED MOTORS (50Hz)

2.20 kW

n2 [rpm]	M2 [Nm]	fs	i	Gear reducer	Motor	Fr2 D-S-P [N]	Fr2 C [N]
42.1	454	1.3	22.82	B083	112M6	18000	5930
41.4	441	Ex	69.14	B083	90L2	18000	5981
41.2	459	1.3	34.49	B083	100LA4	18000	5970
40.8	469	1.3	22.82	B083	112MA6	18000	5981
40.7	465	2.6	35.87	B103	112MR4	22000	7515
40.5	471	2.1	23.70	B103	112M6	22000	7522
39.6	478	2.6	35.87	B103	100LA4	22000	7577
39.2	487	2.1	23.70	B103	112MA6	22000	7592
39.1	467	Ex	73.14	B083	90L2	18000	6073
36.9	513	1.2	39.60	B083	112MR4	18000	6149
36.2	527	2.0	26.51	B103	112M6	22000	7774
35.9	531	1.1	26.71	B083	112M6	18000	6185
35.9	527	1.2	39.60	B083	100LA4	18000	6195
35.5	533	2.3	41.12	B103	112MR4	22000	7823
35.4	515	Ex	80.76	B083	90L2	18000	6237
35.1	544	2.0	26.51	B103	112MA6	22000	7847
34.8	549	1.1	26.71	B083	112MA6	18000	6237
34.5	548	2.2	41.12	B103	100LA4	22000	7887
34.0	556	1.1	42.95	B083	112MR4	18000	6282
33.1	572	1.1	42.95	B083	100LA4	18000	6328
32.7	578	2.1	44.61	B103	112MR4	22000	8011
32.5	587	1.0	29.50	B083	112M6	18000	6347
32.1	588	1.0	45.44	B083	112MR4	18000	6375
31.8	594	2.1	44.61	B103	100LA4	22000	8076
31.5	606	1.0	29.50	B083	112MA6	18000	6399
31.4	608	1.9	30.55	B103	112M6	22000	8101
31.3	605	1.0	45.44	B083	100LA4	18000	6421
30.9	612	2.0	47.28	B103	112MR4	22000	8147
30.4	627	1.8	30.55	B103	112MA6	22000	8176
30.0	630	1.9	47.28	B103	100LA4	22000	8213
29.1	651	2.2	50.24	B103	112MR4	22000	8291
29.0	658	1.9	33.07	B103	112M6	22000	8288
28.5	663	1.1	51.19	B083	112MR4	18000	6572
28.3	669	2.2	50.24	B103	100LA4	22000	8357
28.1	679	1.8	33.07	B103	112MA6	22000	8363
27.7	682	1.1	51.19	B083	100LA4	18000	6618
27.5	687	2.1	53.02	B103	112MR4	22000	8419
26.8	706	2.1	53.02	B103	100LA4	22000	8486
26.8	714	1.7	35.87	B103	112M6	22000	8482
26.3	719	1.0	55.52	B083	112MR4	18000	6706
25.9	737	1.7	35.87	B103	112MA6	22000	8559
25.0	758	1.9	58.50	B103	112MR4	22000	8657
24.3	779	1.9	58.50	B103	100LA4	22000	8725
23.7	806	2.5	40.53	B123	112M6	30000	12339
23.3	818	1.5	41.12	B103	112M6	22000	8815

5.1 B/BA GEARED MOTORS (50Hz)

2.20 kW

n2 [rpm]	M2 [Nm]	fs	i	Gear reducer	Motor	Fr2 D-S-P [N]	Fr2 C [N]
22.9	832	2.4	40.53	B123	112MA6	30000	12446
22.7	833	3.4	62.59	B123	100LA4	30000	12495
22.6	844	1.5	41.12	B103	112MA6	22000	8893
22.5	840	1.7	64.89	B103	112MR4	22000	8912
21.9	864	1.7	64.89	B103	100LA4	22000	8981
21.5	887	1.4	44.61	B103	112M6	22000	9016
21.4	893	2.4	44.89	B123	112M6	30000	12684
21.3	888	1.6	68.58	B103	112MR4	22000	9050
21.0	899	3.1	69.43	B123	112MR4	30000	12754
20.8	916	1.3	44.61	B103	112MA6	22000	9095
20.7	913	1.6	68.58	B103	100LA4	22000	9119
20.7	922	2.3	44.89	B123	112MA6	30000	12793
20.5	925	3.0	69.43	B123	100LA4	30000	12849
20.3	941	1.3	47.28	B103	112M6	22000	9161
20.1	942	1.5	72.76	B103	112MR4	22000	9198
19.7	971	1.3	47.28	B103	112MA6	22000	9241
19.6	964	3.1	74.42	B123	112MR4	30000	12991
19.5	969	1.5	72.76	B103	100LA4	22000	9268
19.3	991	2.3	49.80	B123	112M6	30000	13039
19.1	999	1.5	50.24	B103	112M6	22000	9314
19.1	991	3.0	74.42	B123	100LA4	30000	13087
18.7	1023	2.3	49.80	B123	112MA6	30000	13148
18.5	1032	1.4	50.24	B103	112MA6	22000	9394
18.5	1022	1.4	78.92	B103	112MR4	22000	9404
18.2	1037	2.9	80.04	B123	112MR4	30000	13242
18.1	1055	1.4	53.02	B103	112M6	22000	9450
18.0	1051	1.4	78.92	B103	100LA4	22000	9475
17.7	1080	2.5	54.30	B123	112M6	30000	13337
17.7	1066	2.8	80.04	B123	100LA4	30000	13339
17.5	1089	1.3	53.02	B103	112MA6	22000	9531
17.5	1083	1.4	83.66	B103	112MR4	22000	9552
17.1	1115	2.4	54.30	B123	112MA6	30000	13446
17.0	1114	1.4	83.66	B103	100LA4	22000	9623
16.4	1164	1.2	58.50	B103	112M6	22000	9701
16.2	1181	2.3	59.36	B123	112M6	30000	13644
16.2	1164	2.6	89.87	B123	112MR4	30000	13644
15.9	1201	1.2	58.50	B103	112MA6	22000	9782
15.8	1196	1.3	92.31	B103	112MR4	22000	9805
15.8	1197	2.5	89.87	B123	100LA4	30000	13741
15.7	1219	2.2	59.36	B123	112MA6	30000	13755
15.4	1229	1.2	92.31	B103	100LA4	22000	9877
15.3	1245	2.3	62.59	B123	112M6	30000	13828
15.1	1253	3.4	94.13	B143	100LA4	40000	40000
14.9	1285	2.2	62.59	B123	112MA6	30000	13938
14.8	1291	1.1	64.89	B103	112M6	22000	9967

5.1 B/BA GEARED MOTORS (50Hz)

2.20 kW

n2 [rpm]	M2 [Nm]	fs	i	Gear reducer	Motor	Fr2 D-S-P [N]	Fr2 C [N]
14.6	1291	2.3	99.70	B123	112MR4	30000	14006
14.3	1332	1.1	64.89	B103	112MA6	22000	10049
14.3	1332	3.2	64.88	B143	112MA6	40000	40000
14.2	1328	2.3	99.70	B123	100LA4	30000	14103
14.0	1364	1.1	68.58	B103	112M6	22000	10110
13.8	1366	1.1	105.44	B103	112MR4	22000	10149
13.8	1381	2.0	69.43	B123	112M6	30000	14188
13.8	1371	3.1	105.83	B143	112MR4	40000	40000
13.7	1381	2.2	106.65	B123	112MR4	30000	14241
13.6	1408	1.0	68.58	B103	112MA6	22000	10192
13.6	1401	3.0	70.43	B143	112M6	40000	40000
13.5	1404	1.1	105.44	B103	100LA4	22000	10222
13.4	1426	2.0	69.43	B123	112MA6	30000	14298
13.4	1409	3.0	105.83	B143	100LA4	40000	40000
13.3	1420	2.1	106.65	B123	100LA4	30000	14338
13.2	1447	1.0	72.76	B103	112M6	22000	10263
13.2	1446	3.0	70.43	B143	112MA6	40000	40000
13.0	1450	2.9	111.94	B143	112MR4	40000	40000
12.9	1480	2.0	74.42	B123	112M6	30000	14428
12.7	1487	1.0	114.80	B103	112MR4	22000	10370
12.7	1491	2.9	111.94	B143	100LA4	40000	40000
12.5	1528	2.0	74.42	B123	112MA6	30000	14538
12.4	1529	1.0	114.80	B103	100LA4	22000	10443
12.4	1534	2.8	77.12	B143	112M6	40000	40000
12.2	1549	1.9	119.60	B123	112MR4	30000	14639
12.1	1584	2.7	77.12	B143	112MA6	40000	40000
12.0	1592	1.9	80.04	B123	112M6	30000	14680
11.9	1593	1.9	119.60	B123	100LA4	30000	14736
11.7	1614	2.6	124.62	B143	112MR4	40000	40000
11.6	1644	1.8	80.04	B123	112MA6	30000	14789
11.4	1659	2.6	124.62	B143	100LA4	40000	40000
11.2	1683	1.8	129.96	B123	112MR4	30000	14927
11.2	1702	2.5	85.54	B143	112M6	40000	40000
10.9	1731	1.7	129.96	B123	100LA4	30000	15022
10.9	1757	2.4	85.54	B143	112MA6	40000	40000
10.7	1788	1.7	89.87	B123	112M6	30000	15076
10.7	1767	2.4	136.44	B143	112MR4	40000	40000
10.4	1817	2.4	136.44	B143	100LA4	40000	40000
10.3	1845	1.6	89.87	B123	112MA6	30000	15184
10.2	1873	2.3	94.13	B143	112M6	40000	40000
10.1	1871	1.6	144.43	B123	112MR4	30000	15288
9.9	1933	2.2	94.13	B143	112MA6	40000	40000
9.8	1923	1.6	144.43	B123	100LA4	30000	15382
9.8	1937	2.2	149.59	B143	112MR4	40000	40000
9.6	1983	1.5	99.70	B123	112M6	30000	15427

5.1 B/BA GEARED MOTORS (50Hz)

2.20 kW

n2 [rpm]	M2 [Nm]	fs	i	Gear reducer	Motor	Fr2 D-S-P [N]	Fr2 C [N]
9.5	1992	2.1	149.59	B143	100LA4	40000	40000
9.3	2047	1.5	99.70	B123	112MA6	30000	15533
9.1	2075	1.4	160.23	B123	112MR4	30000	15638
9.1	2105	2.0	105.83	B143	112M6	40000	40000
9.0	2122	1.4	106.65	B123	112M6	30000	15651
8.9	2134	1.4	160.23	B123	100LA4	30000	15730
8.8	2173	2.0	105.83	B143	112MA6	40000	40000
8.8	2157	2.0	166.53	B143	112MR4	40000	40000
8.7	2190	1.4	106.65	B123	112MA6	30000	15755
8.6	2227	1.9	111.94	B143	112M6	40000	40000
8.5	2218	1.9	166.53	B143	100LA4	40000	40000
8.3	2299	1.9	111.94	B143	112MA6	40000	40000
8.1	2336	1.3	180.40	B123	112MR4	30000	16027
8.0	2379	1.3	119.60	B123	112M6	30000	16023
7.9	2402	1.2	180.40	B123	100LA4	30000	16117
7.8	2456	1.2	119.60	B123	112MA6	30000	16124
7.8	2425	1.8	187.24	B143	112MR4	40000	40000
7.7	2479	1.7	124.62	B143	112M6	40000	40000
7.6	2493	1.7	187.24	B143	100LA4	40000	40000
7.5	2559	1.7	124.62	B143	112MA6	40000	40000
7.4	2585	1.2	129.96	B123	112M6	30000	16285
7.2	2669	1.1	129.96	B123	112MA6	30000	16382
7.0	2714	1.6	136.44	B143	112M6	40000	40000
6.8	2802	1.5	136.44	B143	112MA6	40000	40000
6.6	2873	1.0	144.43	B123	112M6	30000	16604
6.4	2966	1.0	144.43	B123	112MA6	30000	16697
6.4	2976	1.4	149.59	B143	112M6	40000	40000
6.2	3072	1.4	149.59	B143	112MA6	40000	40000
5.8	3313	1.3	166.53	B143	112M6	40000	40000
5.6	3420	1.2	166.53	B143	112MA6	40000	40000
5.1	3725	1.1	187.24	B143	112M6	40000	40000
5.0	3845	1.1	187.24	B143	112MA6	40000	40000

3.00 kW

n2 [rpm]	M2 [Nm]	fs	i	Gear reducer	Motor	Fr2 D-S-P [N]	Fr2 C [N]
347.0	76	Ex	8.36	BA72	100L2	3984	1992
343.4	76	Ex	8.36	BA72	100LA2	3998	1999
288.3	91	Ex	10.06	BA72	100L2	4238	2119
285.3	92	Ex	10.06	BA72	100LA2	4253	2127
253.7	102	2.0	5.71	B063	112MS4	7788	2225
248.5	104	2.0	5.71	B063	100LB4	7836	2239
233.1	113	Ex	12.44	BA72	100L2	4550	2275
230.7	114	Ex	12.44	BA72	100LA2	4565	2283

5.1 B/BA GEARED MOTORS (50Hz)

3.00 kW

n2 [rpm]	M2 [Nm]	fs	i	Gear reducer	Motor	Fr2 D-S-P [N]	Fr2 C [N]
210.8	122	2.0	6.88	B063	112MS4	8215	2347
206.4	125	2.0	6.88	B063	100LB4	8264	2361
198.0	130	1.9	7.32	B063	112MS4	8362	2389
194.5	135	Ex	14.91	BA72	100L2	4832	2416
193.9	133	1.9	7.32	B063	100LB4	8412	2403
192.5	136	Ex	14.91	BA72	100LA2	4849	2424
185.7	139	2.6	7.81	B083	112MS4	13279	3794
181.8	142	2.5	7.81	B083	100LB4	13363	3818
173.5	157	1.9	8.36	BA72	112MS4	5020	2510
169.9	160	1.9	8.36	BA72	100LB4	5055	2528
168.2	153	2.7	8.62	B083	112MS4	13681	3909
164.7	157	2.7	8.62	B083	100LB4	13767	3933
162.7	160	1.3	5.71	B063	112MB6	8827	2522
161.6	163	Ex	17.94	BA72	100L2	5140	2570
160.0	164	Ex	17.94	BA72	100LA2	5158	2579
158.3	163	1.9	9.16	B063	112MS4	8901	2543
155.0	166	1.9	9.16	B063	100LB4	8953	2558
144.1	189	1.6	10.06	BA72	112MS4	5340	2670
141.3	183	1.8	10.26	B063	112MS4	9181	2623
141.2	193	1.5	10.06	BA72	100LB4	5377	2689
138.4	186	1.8	10.26	B063	100LB4	9233	2638
138.2	187	2.5	10.49	B083	112MS4	14504	4144
135.3	191	2.5	10.49	B083	100LB4	14593	4170
135.2	193	1.3	6.88	B063	112MB6	9282	2652
131.5	196	2.0	11.03	B063	112MS4	9360	2674
130.7	201	Ex	22.19	BA72	100L2	5518	2759
129.3	203	Ex	22.19	BA72	100LA2	5537	2768
128.8	200	1.9	11.03	B063	100LB4	9412	2689
127.0	205	1.2	7.32	B063	112MB6	9437	2696
125.1	206	2.6	11.59	B083	112MS4	14932	4266
124.2	210	1.7	7.81	B083	132S6	14957	4273
122.9	212	1.7	7.81	B083	132SA6	15002	4286
122.5	210	2.6	11.59	B083	100LB4	15024	4293
119.1	219	1.6	7.81	B083	112MB6	15141	4326
117.4	220	1.8	12.35	B063	112MS4	9645	2756
116.5	234	1.3	12.44	BA72	112MS4	5732	2866
114.9	224	1.8	12.35	B063	100LB4	9697	2771
114.1	238	1.2	12.44	BA72	100LB4	5772	2886
112.5	232	1.9	8.62	B083	132S6	15394	4398
111.3	234	1.8	8.62	B083	132SA6	15440	4411
111.3	247	1.2	8.36	BA72	112MB6	5821	2910
110.3	234	1.8	13.15	B063	112MS4	9802	2801
108.0	239	1.8	13.15	B063	100LB4	9855	2816
107.9	241	1.8	8.62	B083	112MB6	15582	4452
105.6	249	Ex	27.45	BA72	100L2	5923	2961

5.1 B/BA GEARED MOTORS (50Hz)

3.00 kW

n2 [rpm]	M2 [Nm]	fs	i	Gear reducer	Motor	Fr2 D-S-P [N]	Fr2 C [N]
104.6	251	Ex	27.45	BA72	100LA2	5943	2972
101.5	257	1.3	9.16	B063	112MB6	10000	2857
100.5	257	2.3	14.43	B083	112MS4	15911	4546
98.4	262	2.2	14.43	B083	100LB4	16007	4573
98.3	253	Ex	29.50	B083	100L2	16048	4585
97.3	256	Ex	29.50	B083	100LA2	16096	4599
97.3	280	1.3	14.91	BA72	112MS4	6088	3044
95.5	270	1.6	15.18	B063	112MS4	10165	2904
95.3	286	1.3	14.91	BA72	100LB4	6131	3065
93.6	276	1.5	15.18	B063	100LB4	10218	2919
92.4	282	1.7	10.49	B083	132S6	16284	4652
92.4	297	1.0	10.06	BA72	112MB6	6192	3096
91.5	285	1.6	10.49	B083	132SA6	16331	4666
91.2	273	Ex	31.80	B083	100L2	16397	4685
90.6	287	1.3	10.26	B063	112MB6	10287	2939
90.3	276	Ex	31.80	B083	100LA2	16446	4699
88.6	294	1.6	10.49	B083	112MB6	16478	4708
87.4	295	2.1	16.60	B083	112MS4	16556	4730
86.7	287	Ex	33.43	B063	100L2	10458	2988
85.8	290	Ex	33.43	B063	100LA2	10484	2996
85.6	301	2.0	16.60	B083	100LB4	16654	4758
85.3	302	1.4	17.00	B063	112MS4	10454	2987
84.3	309	1.3	11.03	B063	112MB6	10468	2991
84.1	296	Ex	34.49	B083	100L2	16780	4794
83.7	311	1.7	11.59	B083	132S6	16744	4784
83.5	309	1.4	17.00	B063	100LB4	10507	3002
83.2	299	Ex	34.49	B083	100LA2	16829	4808
82.9	314	1.7	11.59	B083	132SA6	16793	4798
80.8	337	1.1	17.94	BA72	112MS4	6476	3238
80.3	324	1.7	11.59	B083	112MB6	16942	4841
79.1	326	1.9	18.32	B083	112MS4	17022	4863
79.1	344	1.0	17.94	BA72	100LB4	6521	3261
77.5	333	1.8	18.32	B083	100LB4	17121	4892
75.3	346	1.2	12.35	B063	112MB6	10754	3073
75.2	331	Ex	38.58	B063	100L2	10827	3093
74.4	334	Ex	38.58	B063	100LA2	10854	3101
73.2	340	Ex	39.60	B083	100L2	17440	4983
72.5	343	Ex	39.60	B083	100LA2	17490	4997
70.7	368	1.2	13.15	B063	112MB6	10910	3117
67.5	369	Ex	42.95	B083	100L2	17836	5096
67.2	387	1.5	14.43	B083	132S6	17787	5082
67.1	371	Ex	43.22	B063	100L2	11118	3177
66.8	372	Ex	42.95	B083	100LA2	17886	5110
66.5	391	1.5	14.43	B083	132SA6	17837	5096
66.4	375	Ex	43.22	B063	100LA2	11144	3184

5.1 B/BA GEARED MOTORS (50Hz)

3.00 kW

n2 [rpm]	M2 [Nm]	fs	i	Gear reducer	Motor	Fr2 D-S-P [N]	Fr2 C [N]
64.8	398	1.1	22.39	B063	112MS4	11145	3184
64.5	404	1.4	14.43	B083	112MB6	17990	5140
63.8	390	Ex	45.44	B083	100L2	18000	5175
63.5	406	1.5	22.82	B083	112MS4	18000	5164
63.4	407	1.1	22.39	B063	100LB4	11197	3199
63.2	394	Ex	45.44	B083	100LA2	18000	5189
62.2	414	1.5	22.82	B083	100LB4	18000	5193
61.3	425	1.0	15.18	B063	112MB6	11262	3218
61.2	421	2.4	23.70	B103	112MS4	22000	6556
59.9	430	2.3	23.70	B103	100LB4	22000	6597
58.5	446	1.4	16.60	B083	132S6	18000	5276
57.8	450	1.4	16.60	B083	132SA6	18000	5290
56.7	439	Ex	51.19	B083	100L2	18000	5343
56.2	464	2.2	17.27	B103	132S6	22000	6719
56.1	444	Ex	51.19	B083	100LA2	18000	5358
56.0	465	1.3	16.60	B083	112MB6	18000	5335
55.6	469	2.2	17.27	B103	132SA6	22000	6740
54.7	471	2.3	26.51	B103	112MS4	22000	6776
54.3	475	1.3	26.71	B083	112MS4	18000	5385
53.9	484	2.1	17.27	B103	112MB6	22000	6802
53.6	481	2.2	26.51	B103	100LB4	22000	6817
53.2	485	1.3	26.71	B083	100LB4	18000	5415
52.9	492	1.2	18.32	B083	132S6	18000	5415
52.4	497	1.2	18.32	B083	132SA6	18000	5429
52.2	476	Ex	55.52	B083	100L2	18000	5459
51.7	481	Ex	55.52	B083	100LA2	18000	5474
50.9	512	2.0	19.06	B103	132S6	22000	6914
50.8	513	1.2	18.32	B083	112MB6	18000	5474
50.4	517	2.0	19.06	B103	132SA6	22000	6935
49.2	525	1.2	29.50	B083	112MS4	18000	5525
48.8	534	1.9	19.06	B103	112MB6	22000	6999
48.4	514	Ex	59.96	B083	100L2	18000	5570
48.1	536	1.1	29.50	B083	100LB4	18000	5555
47.9	520	Ex	59.96	B083	100LA2	18000	5585
47.5	543	2.1	30.55	B103	112MS4	22000	7060
46.5	555	2.1	30.55	B103	100LB4	22000	7103
45.6	565	1.1	31.80	B083	112MS4	18000	5632
45.5	547	Ex	63.74	B083	100L2	18000	5658
45.0	553	Ex	63.74	B083	100LA2	18000	5673
44.7	577	1.1	31.80	B083	100LB4	18000	5661
43.9	588	2.1	33.07	B103	112MS4	22000	7222
42.9	600	2.0	33.07	B103	100LB4	22000	7265
40.9	636	1.6	23.70	B103	132S6	22000	7359
40.5	643	1.6	23.70	B103	132SA6	22000	7381
40.4	638	1.9	35.87	B103	112MS4	22000	7390

5.1 B/BA GEARED MOTORS (50Hz)

3.00 kW

n2 [rpm]	M2 [Nm]	fs	i	Gear reducer	Motor	Fr2 D-S-P [N]	Fr2 C [N]
39.6	651	1.9	35.87	B103	100LB4	22000	7434
39.2	664	1.5	23.70	B103	112MB6	22000	7447
36.6	712	1.5	26.51	B103	132S6	22000	7595
36.2	719	1.5	26.51	B103	132SA6	22000	7616
35.8	721	2.8	40.53	B123	112MS4	30000	10747
35.3	731	1.7	41.12	B103	112MS4	22000	7679
35.3	739	2.7	27.51	B123	132S6	30000	10779
35.1	742	1.5	26.51	B103	112MB6	22000	7684
35.0	736	2.7	40.53	B123	100LB4	30000	10808
34.9	746	2.7	27.51	B123	132SA6	30000	10809
34.5	747	1.6	41.12	B103	100LB4	22000	7723
32.5	793	1.5	44.61	B103	112MS4	22000	7853
32.3	798	2.7	44.89	B123	112MS4	30000	11046
31.8	810	1.5	44.61	B103	100LB4	22000	7898
31.7	820	1.4	30.55	B103	132S6	22000	7897
31.6	815	2.7	44.89	B123	100LB4	30000	11107
31.5	827	2.4	30.79	B123	132S6	30000	11109
31.4	829	1.4	30.55	B103	132SA6	22000	7920
31.2	835	2.4	30.79	B123	132SA6	30000	11139
31.0	839	2.4	31.26	B123	132S6	30000	11153
30.7	841	1.5	47.28	B103	112MS4	22000	7979
30.7	848	2.4	31.26	B123	132SA6	30000	11184
30.4	856	1.3	30.55	B103	112MB6	22000	7988
30.0	859	1.4	47.28	B103	100LB4	22000	8025
29.7	875	2.3	31.26	B123	112MB6	30000	11278
29.3	888	1.4	33.07	B103	132S6	22000	8069
29.1	886	2.6	49.80	B123	112MS4	30000	11353
29.0	897	1.4	33.07	B103	132SA6	22000	8091
28.9	893	1.6	50.24	B103	112MS4	22000	8111
28.5	904	2.6	49.80	B123	100LB4	30000	11415
28.3	912	1.6	50.24	B103	100LB4	22000	8157
28.1	926	1.3	33.07	B103	112MB6	22000	8160
28.0	931	2.2	34.68	B123	132S6	30000	11460
27.7	941	2.1	34.68	B123	132SA6	30000	11491
27.3	943	1.5	53.02	B103	112MS4	22000	8229
27.0	963	1.3	35.87	B103	132S6	22000	8246
26.8	973	1.3	35.87	B103	132SA6	22000	8269
26.8	963	1.5	53.02	B103	100LB4	22000	8275
26.8	971	2.1	34.68	B123	112MB6	30000	11585
26.7	966	2.8	54.30	B123	112MS4	30000	11610
26.2	986	2.8	54.30	B123	100LB4	30000	11672
25.9	1004	1.2	35.87	B103	112MB6	22000	8339
24.8	1040	1.4	58.50	B103	112MS4	22000	8446
24.4	1056	2.6	59.36	B123	112MS4	30000	11876
24.3	1062	1.4	58.50	B103	100LB4	22000	8493

5.1 B/BA GEARED MOTORS (50Hz)

3.00 kW

n2 [rpm]	M2 [Nm]	fs	i	Gear reducer	Motor	Fr2 D-S-P [N]	Fr2 C [N]
23.9	1088	1.9	40.53	B123	132S6	30000	11923
23.9	1078	2.5	59.36	B123	100LB4	30000	11938
23.7	1100	1.8	40.53	B123	132SA6	30000	11954
23.6	1104	1.1	41.12	B103	132S6	22000	8547
23.3	1116	1.1	41.12	B103	132SA6	22000	8570
23.2	1113	2.5	62.59	B123	112MS4	30000	12034
22.9	1135	1.8	40.53	B123	112MB6	30000	12048
22.7	1136	2.5	62.59	B123	100LB4	30000	12097
22.6	1152	1.1	41.12	B103	112MB6	22000	8640
22.3	1154	1.3	64.89	B103	112MS4	22000	8676
21.9	1178	1.2	64.89	B103	100LB4	22000	8723
21.7	1198	1.0	44.61	B103	132S6	22000	8728
21.6	1205	1.8	44.89	B123	132S6	30000	12227
21.5	1210	1.0	44.61	B103	132SA6	22000	8751
21.4	1218	1.8	44.89	B123	132SA6	30000	12258
21.1	1219	1.2	68.58	B103	112MS4	22000	8800
20.9	1235	2.3	69.43	B123	112MS4	30000	12345
20.7	1245	1.2	68.58	B103	100LB4	22000	8846
20.7	1257	1.7	44.89	B123	112MB6	30000	12352
20.6	1253	3.4	70.43	B143	112MS4	40000	40000
20.5	1261	2.2	69.43	B123	100LB4	30000	12407
20.2	1279	3.3	70.43	B143	100LB4	40000	40000
19.9	1294	1.1	72.76	B103	112MS4	22000	8932
19.5	1321	1.1	72.76	B103	100LB4	22000	8979
19.5	1337	1.7	49.80	B123	132S6	30000	12535
19.5	1323	2.3	74.42	B123	112MS4	30000	12551
19.3	1349	1.1	50.24	B103	132S6	22000	8992
19.3	1351	1.7	49.80	B123	132SA6	30000	12566
19.2	1354	2.7	48.35	B143	112MB6	40000	40000
19.1	1363	1.1	50.24	B103	132SA6	22000	9015
19.1	1351	2.2	74.42	B123	100LB4	30000	12614
18.8	1371	3.1	77.12	B143	112MS4	40000	40000
18.7	1395	1.7	49.80	B123	112MB6	30000	12660
18.5	1407	1.0	50.24	B103	112MB6	22000	9086
18.4	1403	1.0	78.92	B103	112MS4	22000	9114
18.4	1400	3.0	77.12	B143	100LB4	40000	40000
18.3	1424	1.0	53.02	B103	132S6	22000	9112
18.2	1427	3.0	53.16	B143	132S6	40000	40000
18.1	1438	1.0	53.02	B103	132SA6	22000	9135
18.1	1423	2.1	80.04	B123	112MS4	30000	12768
18.1	1442	3.0	53.16	B143	132SA6	40000	40000
18.0	1433	1.0	78.92	B103	100LB4	22000	9161
17.9	1458	1.9	54.30	B123	132S6	30000	12790
17.8	1467	2.9	54.63	B143	132S6	40000	40000
17.7	1473	1.9	54.30	B123	132SA6	30000	12821

5.1 B/BA GEARED MOTORS (50Hz)

3.00 kW

n2 [rpm]	M2 [Nm]	fs	i	Gear reducer	Motor	Fr2 D-S-P [N]	Fr2 C [N]
17.7	1453	2.1	80.04	B123	100LB4	30000	12830
17.6	1482	2.9	54.63	B143	132SA6	40000	40000
17.5	1489	2.9	53.16	B143	112MB6	40000	40000
17.3	1488	1.0	83.66	B103	112MS4	22000	9244
17.1	1521	1.8	54.30	B123	112MB6	30000	12914
17.0	1519	1.0	83.66	B103	100LB4	22000	9291
17.0	1530	2.8	54.63	B143	112MB6	40000	40000
17.0	1521	2.8	85.54	B143	112MS4	40000	40000
16.6	1553	2.7	85.54	B143	100LB4	40000	40000
16.4	1584	2.7	59.02	B143	132S6	40000	40000
16.3	1594	1.7	59.36	B123	132S6	30000	13051
16.3	1601	2.7	59.02	B143	132SA6	40000	40000
16.2	1610	1.7	59.36	B123	132SA6	30000	13081
16.1	1598	1.9	89.87	B123	112MS4	30000	13108
15.8	1632	1.8	89.87	B123	100LB4	30000	13169
15.8	1653	2.6	59.02	B143	112MB6	40000	40000
15.7	1662	1.6	59.36	B123	112MB6	30000	13172
15.5	1680	1.7	62.59	B123	132S6	30000	13204
15.4	1674	2.6	94.13	B143	112MS4	40000	40000
15.3	1698	1.7	62.59	B123	132SA6	30000	13234
15.1	1709	2.5	94.13	B143	100LB4	40000	40000
15.0	1742	2.5	64.88	B143	132S6	40000	40000
14.9	1753	1.6	62.59	B123	112MB6	30000	13324
14.8	1760	2.4	64.88	B143	132SA6	40000	40000
14.5	1773	1.7	99.70	B123	112MS4	30000	13409
14.3	1817	2.4	64.88	B143	112MB6	40000	40000
14.2	1810	1.7	99.70	B123	100LB4	30000	13469
14.0	1864	1.5	69.43	B123	132S6	30000	13499
13.8	1884	1.5	69.43	B123	132SA6	30000	13529
13.8	1891	2.3	70.43	B143	132S6	40000	40000
13.7	1882	2.3	105.83	B143	112MS4	40000	40000
13.6	1897	1.6	106.65	B123	112MS4	30000	13601
13.6	1911	2.2	70.43	B143	132SA6	40000	40000
13.4	1944	1.4	69.43	B123	112MB6	30000	13617
13.4	1922	2.2	105.83	B143	100LB4	40000	40000
13.3	1937	1.5	106.65	B123	100LB4	30000	13659
13.2	1972	2.2	70.43	B143	112MB6	40000	40000
13.0	1998	1.5	74.42	B123	132S6	30000	13693
13.0	1991	2.1	111.94	B143	112MS4	40000	40000
12.9	2019	1.5	74.42	B123	132SA6	30000	13721
12.7	2033	2.1	111.94	B143	100LB4	40000	40000
12.6	2070	2.1	77.12	B143	132S6	40000	40000
12.5	2084	1.4	74.42	B123	112MB6	30000	13808
12.4	2092	2.0	77.12	B143	132SA6	40000	40000
12.1	2149	1.4	80.04	B123	132S6	30000	13891

5.1 B/BA GEARED MOTORS (50Hz)

3.00 kW

n2 [rpm]	M2 [Nm]	fs	i	Gear reducer	Motor	Fr2 D-S-P [N]	Fr2 C [N]
12.1	2127	1.4	119.60	B123	112MS4	30000	13918
12.1	2160	2.0	77.12	B143	112MB6	40000	40000
12.0	2171	1.4	80.04	B123	132SA6	30000	13919
11.9	2172	1.4	119.60	B123	100LB4	30000	13975
11.6	2241	1.3	80.04	B123	112MB6	30000	14004
11.6	2216	1.9	124.62	B143	112MS4	40000	40000
11.6	2252	3.0	83.89	B153	132S6	65000	65000
11.4	2263	1.9	124.62	B143	100LB4	40000	40000
11.4	2276	3.0	83.89	B153	132SA6	65000	65000
11.3	2297	1.9	85.54	B143	132S6	40000	40000
11.2	2311	1.3	129.96	B123	112MS4	30000	14141
11.2	2321	1.8	85.54	B143	132SA6	40000	40000
11.1	2353	2.9	87.65	B153	132S6	65000	65000
11.0	2378	2.9	87.65	B153	132SA6	65000	65000
10.9	2360	1.3	129.96	B123	100LB4	30000	14196
10.9	2396	1.8	85.54	B143	112MB6	40000	40000
10.8	2413	1.2	89.87	B123	132S6	30000	14196
10.7	2438	1.2	89.87	B123	132SA6	30000	14222
10.6	2426	1.8	136.44	B143	112MS4	40000	40000
10.4	2478	1.7	136.44	B143	100LB4	40000	40000
10.4	2498	2.7	93.05	B153	132S6	65000	65000
10.3	2517	1.2	89.87	B123	112MB6	30000	14303
10.3	2527	1.7	94.13	B143	132S6	40000	40000
10.3	2524	2.7	93.05	B153	132SA6	65000	65000
10.2	2553	1.7	94.13	B143	132SA6	40000	40000
10.0	2568	1.2	144.43	B123	112MS4	30000	14412
9.9	2636	1.6	94.13	B143	112MB6	40000	40000
9.8	2623	1.1	144.43	B123	100LB4	30000	14464
9.7	2677	1.1	99.70	B123	132S6	30000	14455
9.7	2660	1.6	149.59	B143	112MS4	40000	40000
9.6	2705	1.1	99.70	B123	132SA6	30000	14480
9.5	2716	1.6	149.59	B143	100LB4	40000	40000
9.4	2768	2.5	103.12	B153	132S6	65000	65000
9.3	2792	1.1	99.70	B123	112MB6	30000	14555
9.3	2797	2.4	103.12	B153	132SA6	65000	65000
9.2	2841	1.5	105.83	B143	132S6	40000	40000
9.1	2863	1.0	106.65	B123	132S6	30000	14614
9.1	2871	1.5	105.83	B143	132SA6	40000	40000
9.0	2893	1.0	106.65	B123	132SA6	30000	14638
9.0	2849	1.0	160.23	B123	112MS4	30000	14663
8.9	2909	1.0	160.23	B123	100LB4	30000	14711
8.8	2964	1.4	105.83	B143	112MB6	40000	40000
8.7	2987	1.0	106.65	B123	112MB6	30000	14709
8.7	3005	1.4	111.94	B143	132S6	40000	40000
8.7	2961	1.4	166.53	B143	112MS4	40000	40000

5.1 B/BA GEARED MOTORS (50Hz)

3.00 kW

n2 [rpm]	M2 [Nm]	fs	i	Gear reducer	Motor	Fr2 D-S-P [N]	Fr2 C [N]
8.6	3037	1.4	111.94	B143	132SA6	40000	40000
8.5	3024	1.4	166.53	B143	100LB4	40000	40000
8.3	3135	1.4	111.94	B143	112MB6	40000	40000
7.8	3346	1.3	124.62	B143	132S6	40000	40000
7.8	3326	2.1	123.88	B153	132S6	65000	65000
7.7	3381	1.3	124.62	B143	132SA6	40000	40000
7.7	3330	1.3	187.24	B143	112MS4	40000	40000
7.7	3361	2.0	123.88	B153	132SA6	65000	65000
7.6	3400	1.3	187.24	B143	100LB4	40000	40000
7.5	3490	1.2	124.62	B143	112MB6	40000	40000
7.2	3605	1.9	134.27	B153	132S6	65000	65000
7.2	3642	1.9	134.27	B153	132SA6	65000	65000
7.1	3663	1.2	136.44	B143	132S6	40000	40000
7.0	3701	1.2	136.44	B143	132SA6	40000	40000
6.8	3821	1.1	136.44	B143	112MB6	40000	40000
6.5	4016	1.1	149.59	B143	132S6	40000	40000
6.5	4007	1.7	149.26	B153	132S6	65000	65000
6.4	4058	1.1	149.59	B143	132SA6	40000	40000
6.4	4049	1.7	149.26	B153	132SA6	65000	65000
6.2	4189	1.0	149.59	B143	112MB6	40000	40000
5.9	4441	1.5	165.42	B153	132S6	65000	65000
5.8	4487	1.5	165.42	B153	132SA6	65000	65000

4.00 kW

n2 [rpm]	M2 [Nm]	fs	i	Gear reducer	Motor	Fr2 D-S-P [N]	Fr2 C [N]
350.6	100	Ex	8.36	BA72	112M2	3971	1985
347.0	101	Ex	8.36	BA72	112MA2	3984	1992
343.4	102	Ex	8.36	BA72	100LB2	3998	1999
291.3	120	Ex	10.06	BA72	112M2	4224	2112
288.3	121	Ex	10.06	BA72	112MA2	4238	2119
285.3	123	Ex	10.06	BA72	100LB2	4253	2127
253.7	136	1.5	5.71	B063	112M4	7635	2182
252.0	136	1.5	5.71	B063	112MA4	7650	2186
235.5	149	Ex	12.44	BA72	112M2	4534	2267
233.1	150	Ex	12.44	BA72	112MA2	4550	2275
230.7	152	Ex	12.44	BA72	100LB2	4565	2283
210.8	163	1.5	6.88	B063	112M4	8031	2295
209.3	164	1.5	6.88	B063	112MA4	8046	2299
198.0	174	1.5	7.32	B063	112M4	8167	2333
196.6	175	1.4	7.32	B063	112MA4	8182	2338
196.6	178	Ex	14.91	BA72	112M2	4815	2408
194.5	180	Ex	14.91	BA72	112MA2	4832	2416
192.5	182	Ex	14.91	BA72	100LB2	4849	2424

5.1 B/BA GEARED MOTORS (50Hz)

4.00 kW

n2 [rpm]	M2 [Nm]	fs	i	Gear reducer	Motor	Fr2 D-S-P [N]	Fr2 C [N]
185.7	185	1.9	7.81	B083	112M4	13092	3741
184.4	186	1.9	7.81	B083	112MA4	13119	3748
173.5	209	1.4	8.36	BA72	112M4	5020	2510
172.3	211	1.4	8.36	BA72	112MA4	5032	2516
168.2	204	2.1	8.62	B083	112M4	13474	3850
167.0	206	2.1	8.62	B083	112MA4	13501	3857
163.3	214	Ex	17.94	BA72	112M2	5122	2561
161.6	217	Ex	17.94	BA72	112MA2	5140	2570
160.0	219	Ex	17.94	BA72	100LB2	5158	2579
158.3	217	1.4	9.16	B063	112M4	8656	2473
157.2	219	1.4	9.16	B063	112MA4	8671	2478
144.1	252	1.2	10.06	BA72	112M4	5340	2670
143.1	254	1.2	10.06	BA72	112MA4	5352	2676
141.3	243	1.4	10.26	B063	112M4	8907	2545
140.3	245	1.4	10.26	B063	112MA4	8922	2549
138.2	249	1.9	10.49	B083	112M4	14252	4072
137.2	251	1.9	10.49	B083	112MA4	14280	4080
132.0	265	Ex	22.19	BA72	112M2	5499	2749
131.5	261	1.5	11.03	B063	112M4	9065	2590
130.7	268	Ex	22.19	BA72	112MA2	5518	2759
130.6	263	1.5	11.03	B063	112MA4	9080	2594
129.3	271	Ex	22.19	BA72	100LB2	5537	2768
125.1	275	2.0	11.59	B083	112M4	14654	4187
124.3	277	2.0	11.59	B083	112MA4	14683	4195
122.9	282	1.3	7.81	B083	132MA6	14716	4205
117.4	293	1.4	12.35	B063	112M4	9314	2661
116.6	295	1.4	12.35	B063	112MA4	9329	2666
111.3	312	1.4	8.62	B083	132MA6	15124	4321
110.3	312	1.4	13.15	B063	112M4	9451	2700
109.5	314	1.4	13.15	B063	112MA4	9466	2704
100.5	342	1.7	14.43	B083	112M4	15565	4447
99.8	344	1.7	14.43	B083	112MA4	15595	4456
99.3	334	Ex	29.50	B083	112M2	15663	4475
98.3	337	Ex	29.50	B083	112MA2	15707	4488
97.3	341	Ex	29.50	B083	100LB2	15752	4500
95.5	360	1.2	15.18	B063	112M4	9759	2788
94.9	362	1.2	15.18	B063	112MA4	9774	2793
92.1	360	Ex	31.80	B083	112M2	15985	4567
91.5	380	1.2	10.49	B083	132MA6	15948	4556
91.2	364	Ex	31.80	B083	112MA2	16029	4580
90.3	368	Ex	31.80	B083	100LB2	16074	4593
87.6	379	Ex	33.43	B063	112M2	10004	2858
87.4	393	1.6	16.60	B083	112M4	16158	4617
86.8	396	1.5	16.60	B083	112MA4	16188	4625
86.7	382	Ex	33.43	B063	112MA2	10026	2865

5.1 B/BA GEARED MOTORS (50Hz)

4.00 kW

n2 [rpm]	M2 [Nm]	fs	i	Gear reducer	Motor	Fr2 D-S-P [N]	Fr2 C [N]
85.8	386	Ex	33.43	B063	100LB2	10048	2871
85.3	403	1.1	17.00	B063	112M4	9999	2857
84.9	391	Ex	34.49	B083	112M2	16336	4667
84.7	406	1.1	17.00	B063	112MA4	10013	2861
84.1	395	Ex	34.49	B083	112MA2	16381	4680
84.0	409	2.5	17.27	B103	112M4	20586	5882
83.4	412	2.4	17.27	B103	112MA4	20628	5894
83.2	399	Ex	34.49	B083	100LB2	16426	4693
82.9	419	1.3	11.59	B083	132MA6	16369	4677
79.1	434	1.4	18.32	B083	112M4	16582	4738
78.6	437	1.4	18.32	B083	112MA4	16612	4746
76.1	452	2.2	19.06	B103	112M4	21183	6052
75.6	455	2.2	19.06	B103	112MA4	21225	6064
74.0	448	Ex	39.60	B083	112M2	16937	4839
73.2	453	Ex	39.60	B083	112MA2	16982	4852
72.5	458	Ex	39.60	B083	100LB2	17027	4865
68.2	486	Ex	42.95	B083	112M2	17293	4941
67.5	491	Ex	42.95	B083	112MA2	17339	4954
66.8	497	Ex	42.95	B083	100LB2	17384	4967
66.5	522	1.1	14.43	B083	132MA6	17309	4945
64.5	514	Ex	45.44	B083	112M2	17540	5012
63.8	520	Ex	45.44	B083	112MA2	17586	5024
63.5	541	1.1	22.82	B083	112M4	17528	5008
63.2	525	Ex	45.44	B083	100LB2	17631	5038
63.1	545	1.1	22.82	B083	112MA4	17558	5017
62.4	556	2.7	15.38	B123	132MA6	30000	9001
61.2	562	1.8	23.70	B103	112M4	22000	6441
60.8	566	1.8	23.70	B103	112MA4	22000	6454
57.8	600	1.0	16.60	B083	132MA6	17909	5117
55.6	625	1.6	17.27	B103	132MA6	22000	6612
54.7	629	1.7	26.51	B103	112M4	22000	6647
54.3	633	1.7	26.51	B103	112MA4	22000	6659
51.7	672	2.4	18.58	B123	132MA6	30000	9474
50.4	689	1.5	19.06	B103	132MA6	22000	6794
47.5	724	1.6	30.55	B103	112M4	22000	6911
47.1	729	1.6	30.55	B103	112MA4	22000	6924
46.6	745	2.4	20.61	B123	132MA6	30000	9739
46.4	741	2.7	31.26	B123	112M4	30000	9760
46.1	746	2.7	31.26	B123	112MA4	30000	9777
43.9	784	1.6	33.07	B103	112M4	22000	7061
43.5	789	1.6	33.07	B103	112MA4	22000	7074
42.1	824	2.5	22.78	B123	132MA6	30000	9996
41.8	822	2.5	34.68	B123	112M4	30000	10027
41.5	828	2.4	34.68	B123	112MA4	30000	10045
40.5	857	1.2	23.70	B103	132MA6	22000	7205

5.1 B/BA GEARED MOTORS (50Hz)

4.00 kW

n2 [rpm]	M2 [Nm]	fs	i	Gear reducer	Motor	Fr2 D-S-P [N]	Fr2 C [N]
40.4	850	1.4	35.87	B103	112M4	22000	7216
40.1	856	1.4	35.87	B103	112MA4	22000	7229
37.1	936	2.2	25.89	B123	132MA6	30000	10326
36.2	959	1.1	26.51	B103	132MA6	22000	7420
35.8	961	2.1	40.53	B123	112M4	30000	10431
35.5	968	2.1	40.53	B123	112MA4	30000	10449
35.3	975	1.3	41.12	B103	112M4	22000	7479
35.0	982	1.2	41.12	B103	112MA4	22000	7492
34.9	995	2.0	27.51	B123	132MA6	30000	10483
32.5	1058	1.2	44.61	B103	112M4	22000	7636
32.3	1065	1.2	44.61	B103	112MA4	22000	7649
32.3	1064	2.0	44.89	B123	112M4	30000	10696
32.1	1072	2.0	44.89	B123	112MA4	30000	10714
31.4	1105	1.0	30.55	B103	132MA6	22000	7693
31.2	1114	1.8	30.79	B123	132MA6	30000	10774
30.7	1121	1.1	47.28	B103	112M4	22000	7749
30.7	1131	1.8	31.26	B123	132MA6	30000	10813
30.5	1129	1.1	47.28	B103	112MA4	22000	7762
29.1	1181	2.0	49.80	B123	112M4	30000	10965
29.0	1196	1.0	33.07	B103	132MA6	22000	7845
28.9	1191	1.2	50.24	B103	112M4	22000	7867
28.9	1189	1.9	49.80	B123	112MA4	30000	10983
28.7	1199	1.2	50.24	B103	112MA4	22000	7880
27.7	1255	1.6	34.68	B123	132MA6	30000	11079
27.3	1257	1.2	53.02	B103	112M4	22000	7971
27.3	1260	3.4	53.16	B143	112M4	37910	37910
27.2	1266	1.1	53.02	B103	112MA4	22000	7984
27.1	1269	3.4	53.16	B143	112MA4	37978	37978
26.7	1287	2.1	54.30	B123	112M4	30000	11187
26.5	1296	2.1	54.30	B123	112MA4	30000	11205
26.5	1295	3.3	54.63	B143	112M4	38178	38178
26.4	1304	3.3	54.63	B143	112MA4	38246	38246
26.2	1326	2.6	36.67	B143	132MA6	38273	38273
24.8	1387	1.0	58.50	B103	112M4	22000	8161
24.6	1397	1.0	58.50	B103	112MA4	22000	8175
24.6	1399	3.1	59.02	B143	112M4	38939	38939
24.4	1407	1.9	59.36	B123	112M4	30000	11414
24.4	1409	3.0	59.02	B143	112MA4	39007	39007
24.3	1417	1.9	59.36	B123	112MA4	30000	11431
23.8	1457	2.4	40.29	B143	132MA6	39195	39195
23.7	1466	1.4	40.53	B123	132MA6	30000	11472
23.2	1484	1.9	62.59	B123	112M4	30000	11547
23.0	1494	1.9	62.59	B123	112MA4	30000	11564
22.3	1538	2.8	64.88	B143	112M4	39874	39874
22.2	1549	2.8	64.88	B143	112MA4	39942	39942

5.1 B/BA GEARED MOTORS (50Hz)

4.00 kW

n2 [rpm]	M2 [Nm]	fs	i	Gear reducer	Motor	Fr2 D-S-P [N]	Fr2 C [N]
21.7	1597	2.2	44.16	B143	132MA6	40000	40000
21.4	1624	1.3	44.89	B123	132MA6	30000	11725
20.9	1646	1.7	69.43	B123	112M4	30000	11804
20.7	1658	1.7	69.43	B123	112MA4	30000	11821
20.6	1670	2.6	70.43	B143	112M4	40000	40000
20.4	1682	2.5	70.43	B143	112MA4	40000	40000
19.9	1749	2.1	48.35	B143	132MA6	40000	40000
19.5	1764	1.7	74.42	B123	112M4	30000	11972
19.4	1777	1.7	74.42	B123	112MA4	30000	11989
19.3	1801	1.3	49.80	B123	132MA6	30000	11975
18.8	1828	2.3	77.12	B143	112M4	40000	40000
18.7	1841	2.3	77.12	B143	112MA4	40000	40000
18.1	1898	1.6	80.04	B123	112M4	30000	12145
18.1	1923	2.2	53.16	B143	132MA6	40000	40000
18.0	1911	1.6	80.04	B123	112MA4	30000	12161
17.7	1964	1.4	54.30	B123	132MA6	30000	12176
17.6	1976	2.2	54.63	B143	132MA6	40000	40000
17.0	2028	2.1	85.54	B143	112M4	40000	40000
16.8	2042	2.1	85.54	B143	112MA4	40000	40000
16.3	2135	2.0	59.02	B143	132MA6	40000	40000
16.2	2147	1.3	59.36	B123	132MA6	30000	12376
16.1	2131	1.4	89.87	B123	112M4	30000	12409
16.0	2146	1.4	89.87	B123	112MA4	30000	12424
15.8	2204	3.1	60.92	B153	132MA6	65000	65000
15.4	2232	1.9	94.13	B143	112M4	40000	40000
15.3	2264	1.2	62.59	B123	132MA6	30000	12490
15.3	2247	1.9	94.13	B143	112MA4	40000	40000
15.1	2296	3.0	63.47	B153	132MA6	65000	65000
14.8	2347	1.8	64.88	B143	132MA6	40000	40000
14.5	2364	1.3	99.70	B123	112M4	30000	12633
14.4	2380	1.3	99.70	B123	112MA4	30000	12647
13.8	2511	1.1	69.43	B123	132MA6	30000	12704
13.7	2509	1.7	105.83	B143	112M4	40000	40000
13.6	2529	1.2	106.65	B123	112M4	30000	12770
13.6	2527	1.7	105.83	B143	112MA4	40000	40000
13.6	2548	1.7	70.43	B143	132MA6	40000	40000
13.5	2546	1.2	106.65	B123	112MA4	30000	12784
13.5	2573	2.7	71.15	B153	132MA6	65000	65000
13.0	2654	1.6	111.94	B143	112M4	40000	40000
12.9	2692	1.1	74.42	B123	132MA6	30000	12838
12.9	2673	1.6	111.94	B143	112MA4	40000	40000
12.4	2789	1.5	77.12	B143	132MA6	40000	40000
12.4	2793	2.4	77.22	B153	132MA6	65000	65000
12.1	2836	1.1	119.60	B123	112M4	30000	12987
12.0	2895	1.0	80.04	B123	132MA6	30000	12969

5.1 B/BA GEARED MOTORS (50Hz)

4.00 kW

n2 [rpm]	M2 [Nm]	fs	i	Gear reducer	Motor	Fr2 D-S-P [N]	Fr2 C [N]
12.0	2855	1.0	119.60	B123	112MA4	30000	13000
11.6	2955	1.4	124.62	B143	112M4	40000	40000
11.6	2975	1.4	124.62	B143	112MA4	40000	40000
11.4	3034	2.3	83.89	B153	132MA6	65000	65000
11.2	3094	1.4	85.54	B143	132MA6	40000	40000
11.0	3170	2.2	87.65	B153	132MA6	65000	65000
10.6	3235	1.3	136.44	B143	112M4	40000	40000
10.6	3257	1.3	136.44	B143	112MA4	40000	40000
10.3	3366	2.0	93.05	B153	132MA6	65000	65000
10.2	3405	1.3	94.13	B143	132MA6	40000	40000
9.7	3547	1.2	149.59	B143	112M4	40000	40000
9.6	3571	1.2	149.59	B143	112MA4	40000	40000
9.3	3730	1.8	103.12	B153	132MA6	65000	65000
9.1	3828	1.1	105.83	B143	132MA6	40000	40000
8.7	3949	1.1	166.53	B143	112M4	40000	40000
8.6	4049	1.1	111.94	B143	132MA6	40000	40000
8.6	3976	1.1	166.53	B143	112MA4	40000	40000
7.7	4481	1.5	123.88	B153	132MA6	65000	65000
7.2	4856	1.4	134.27	B153	132MA6	65000	65000
6.4	5399	1.3	149.26	B153	132MA6	65000	65000
5.8	5983	1.1	165.42	B153	132MA6	65000	65000

4.80 kW

n2 [rpm]	M2 [Nm]	fs	i	Gear reducer	Motor	Fr2 D-S-P [N]	Fr2 C [N]
250.2	165	1.3	5.71	B063	112MB4	7541	2155
207.9	198	1.2	6.88	B063	112MB4	7912	2261
195.3	211	1.2	7.32	B063	112MB4	8038	2297
183.1	225	1.6	7.81	B083	112MB4	12993	3712
171.1	255	1.2	8.36	BA72	112MB4	5043	2522
165.8	249	1.7	8.62	B083	112MB4	13361	3817
156.1	264	1.2	9.16	B063	112MB4	8488	2425
139.3	296	1.1	10.26	B063	112MB4	8714	2490
136.3	303	1.5	10.49	B083	112MB4	14104	4030
129.7	318	1.2	11.03	B063	112MB4	8856	2530
123.4	334	1.6	11.59	B083	112MB4	14486	4139
115.7	356	1.1	12.35	B063	112MB4	9076	2593
108.7	379	1.1	13.15	B063	112MB4	9195	2627
99.1	416	1.4	14.43	B083	112MB4	15343	4384
86.2	479	1.3	16.60	B083	112MB4	15895	4541
82.8	498	2.0	17.27	B103	112MB4	20431	5837
78.0	529	1.2	18.32	B083	112MB4	16286	4653
75.0	550	1.8	19.06	B103	112MB4	21005	6001
60.3	684	1.5	23.70	B103	112MB4	22000	6373

5.1 B/BA GEARED MOTORS (50Hz)

4.80 kW

n2 [rpm]	M2 [Nm]	fs	i	Gear reducer	Motor	Fr2 D-S-P [N]	Fr2 C [N]
55.2	747	2.7	25.89	B123	112MB4	30000	9151
53.9	765	1.4	26.51	B103	112MB4	22000	6568
46.8	882	1.3	30.55	B103	112MB4	22000	6817
45.7	902	2.2	31.26	B123	112MB4	30000	9598
43.2	954	1.3	33.07	B103	112MB4	22000	6956
41.2	1001	2.0	34.68	B123	112MB4	30000	9844
39.9	1035	1.2	35.87	B103	112MB4	22000	7101
35.3	1169	1.7	40.53	B123	112MB4	30000	10211
34.8	1186	1.0	41.12	B103	112MB4	22000	7343
32.4	1274	2.7	44.16	B143	112MB4	35559	35559
31.9	1295	1.7	44.89	B123	112MB4	30000	10449
29.6	1395	2.6	48.35	B143	112MB4	36376	36376
28.7	1437	1.6	49.80	B123	112MB4	30000	10686
28.5	1449	1.0	50.24	B103	112MB4	22000	7695
26.9	1534	2.8	53.16	B143	112MB4	37231	37231
26.3	1567	1.7	54.30	B123	112MB4	30000	10880
26.2	1576	2.7	54.63	B143	112MB4	37477	37477
24.2	1703	2.5	59.02	B143	112MB4	38170	38170
24.1	1712	1.6	59.36	B123	112MB4	30000	11074
22.8	1806	1.6	62.59	B123	112MB4	30000	11186
22.0	1872	2.3	64.88	B143	112MB4	39016	39016
20.6	2003	1.4	69.43	B123	112MB4	30000	11400
20.3	2032	2.1	70.43	B143	112MB4	39740	39740
19.2	2147	1.4	74.42	B123	112MB4	30000	11535
18.5	2225	1.9	77.12	B143	112MB4	40000	40000
17.9	2309	1.3	80.04	B123	112MB4	30000	11672
16.7	2468	1.7	85.54	B143	112MB4	40000	40000
15.9	2593	1.2	89.87	B123	112MB4	30000	11872
15.2	2716	1.6	94.13	B143	112MB4	40000	40000
14.3	2876	1.0	99.70	B123	112MB4	30000	12032
13.5	3053	1.4	105.83	B143	112MB4	40000	40000
12.8	3229	1.3	111.94	B143	112MB4	40000	40000
11.5	3595	1.2	124.62	B143	112MB4	40000	40000
10.5	3936	1.1	136.44	B143	112MB4	40000	40000

5.50 kW

n2 [rpm]	M2 [Nm]	fs	i	Gear reducer	Motor	Fr2 D-S-P [N]	Fr2 C [N]
348.2	138	Ex	8.36	BA72	112MB2	3980	1990
289.3	166	Ex	10.06	BA72	112MB2	4233	2117
233.9	206	Ex	12.44	BA72	112MB2	4544	2272
195.2	247	Ex	14.91	BA72	112MB2	4826	2413
188.2	251	1.4	7.81	B083	132MS4	12763	3646
185.7	255	1.4	7.81	B083	132S4	12811	3660

5.1 B/BA GEARED MOTORS (50Hz)

5.50 kW

n2 [rpm]	M2 [Nm]	fs	i	Gear reducer	Motor	Fr2 D-S-P [N]	Fr2 C [N]
170.5	277	1.5	8.62	B083	132MS4	13115	3747
168.2	281	1.5	8.62	B083	132S4	13164	3761
140.1	337	1.4	10.49	B083	132MS4	13825	3950
138.2	342	1.4	10.49	B083	132S4	13875	3964
126.9	373	1.4	11.59	B083	132MS4	14187	4054
125.1	378	1.4	11.59	B083	132S4	14238	4068
120.5	396	2.7	7.97	B123	132MB6	25591	7312
111.3	429	1.0	8.62	B083	132MB6	14651	4186
101.9	464	1.3	14.43	B083	132MS4	14996	4285
100.5	470	1.2	14.43	B083	132S4	15046	4299
100.0	456	Ex	29.50	B083	132S2	15131	4323
99.8	478	2.7	9.62	B123	132MB6	26973	7707
98.7	462	Ex	29.50	B083	112MB2	15182	4338
98.7	462	Ex	29.50	B083	132SA2	15182	4338
92.8	492	Ex	31.80	B083	132S2	15413	4404
91.5	498	Ex	31.80	B083	112MB2	15464	4418
91.5	498	Ex	31.80	B083	132SA2	15464	4418
88.6	534	1.1	16.60	B083	132MS4	15511	4432
87.4	541	1.1	16.60	B083	132S4	15561	4446
85.5	533	Ex	34.49	B083	132S2	15718	4491
85.1	555	1.8	17.27	B103	132MS4	20069	5734
84.4	541	Ex	34.49	B083	112MB2	15769	4505
84.4	541	Ex	34.49	B083	132SA2	15769	4505
84.0	563	1.8	17.27	B103	132S4	20145	5756
80.2	589	1.0	18.32	B083	132MS4	15874	4535
79.1	597	1.0	18.32	B083	132S4	15923	4550
79.1	597	2.7	18.58	B123	132MS4	28748	8214
78.1	606	2.6	18.58	B123	132S4	28852	8244
77.1	613	1.6	19.06	B103	132MS4	20619	5891
76.9	621	2.3	12.48	B123	132MB6	28936	8267
76.1	621	1.6	19.06	B103	132S4	20696	5913
71.3	663	2.7	20.61	B123	132MS4	29545	8441
70.4	672	2.7	20.61	B123	132S4	29651	8472
69.3	689	2.2	13.84	B123	132MB6	29732	8495
64.5	733	2.8	22.78	B123	132MS4	30000	8663
63.7	743	2.7	22.78	B123	132S4	30000	8693
62.4	765	2.0	15.38	B123	132MB6	30000	8727
62.0	762	1.3	23.70	B103	132MS4	21859	6245
61.2	773	1.3	23.70	B103	132S4	21938	6268
56.8	833	2.4	25.89	B123	132MS4	30000	8946
56.3	848	2.7	17.04	B143	132MB6	30302	30302
56.0	844	2.4	25.89	B123	132S4	30000	8977
55.6	859	1.2	17.27	B103	132MB6	22000	6419
55.4	853	1.3	26.51	B103	132MS4	22000	6430
54.7	864	1.2	26.51	B103	132S4	22000	6453

5.1 B/BA GEARED MOTORS (50Hz)

5.50 kW

n2 [rpm]	M2 [Nm]	fs	i	Gear reducer	Motor	Fr2 D-S-P [N]	Fr2 C [N]
53.4	885	2.3	27.51	B123	132MS4	30000	9081
52.7	897	2.3	27.51	B123	132S4	30000	9112
51.7	924	1.7	18.58	B123	132MB6	30000	9143
50.4	948	1.1	19.06	B103	132MB6	22000	6581
48.1	983	1.2	30.55	B103	132MS4	22000	6665
47.7	990	2.0	30.79	B123	132MS4	30000	9331
47.5	996	1.2	30.55	B103	132S4	22000	6688
47.1	1004	2.0	30.79	B123	132S4	30000	9361
47.0	1005	2.0	31.26	B123	132MS4	30000	9364
46.6	1025	1.8	20.61	B123	132MB6	30000	9372
46.4	1019	2.0	31.26	B123	132S4	30000	9395
44.5	1063	1.2	33.07	B103	132MS4	22000	6796
43.9	1078	1.1	33.07	B103	132S4	22000	6819
42.4	1115	1.8	34.68	B123	132MS4	30000	9592
42.1	1133	1.8	22.78	B123	132MB6	30000	9590
41.8	1131	1.8	34.68	B123	132S4	30000	9622
41.0	1153	1.1	35.87	B103	132MS4	22000	6931
40.4	1169	1.0	35.87	B103	132S4	22000	6954
37.5	1275	2.6	25.63	B143	132MB6	33697	33697
37.1	1288	1.6	25.89	B123	132MB6	30000	9865
36.5	1296	2.7	40.29	B143	132MS4	33960	33960
36.3	1303	1.5	40.53	B123	132MS4	30000	9929
36.0	1314	2.6	40.29	B143	132S4	34076	34076
35.8	1321	1.5	40.53	B123	132S4	30000	9958
35.0	1365	2.4	27.44	B143	132MB6	34272	34272
34.9	1368	1.5	27.51	B123	132MB6	30000	9993
33.3	1420	2.4	44.16	B143	132MS4	34734	34734
32.8	1440	2.4	44.16	B143	132S4	34849	34849
32.7	1444	1.5	44.89	B123	132MS4	30000	10144
32.3	1464	1.5	44.89	B123	132S4	30000	10172
32.0	1494	2.3	30.05	B143	132MB6	35031	35031
31.2	1531	1.3	30.79	B123	132MB6	30000	10225
30.7	1555	1.3	31.26	B123	132MB6	30000	10256
30.4	1555	2.3	48.35	B143	132MS4	35496	35496
30.0	1576	2.3	48.35	B143	132S4	35611	35611
29.5	1602	1.4	49.80	B123	132MS4	30000	10356
29.1	1624	1.4	49.80	B123	132S4	30000	10383
29.1	1642	2.1	33.01	B143	132MB6	35816	35816
27.7	1725	1.2	34.68	B123	132MB6	30000	10461
27.7	1709	2.5	53.16	B143	132MS4	36288	36288
27.3	1733	2.5	53.16	B143	132S4	36402	36402
27.1	1746	1.6	54.30	B123	132MS4	30000	10527
26.9	1757	2.4	54.63	B143	132MS4	36515	36515
26.7	1770	1.5	54.30	B123	132S4	30000	10553
26.5	1781	2.4	54.63	B143	132S4	36628	36628

5.1 B/BA GEARED MOTORS (50Hz)

5.50 kW

n2 [rpm]	M2 [Nm]	fs	i	Gear reducer	Motor	Fr2 D-S-P [N]	Fr2 C [N]
26.2	1824	1.9	36.67	B143	132MB6	36686	36686
24.9	1898	2.2	59.02	B143	132MS4	37153	37153
24.8	1909	1.4	59.36	B123	132MS4	30000	10695
24.6	1924	2.2	59.02	B143	132S4	37265	37265
24.4	1935	1.4	59.36	B123	132S4	30000	10721
23.8	2004	1.7	40.29	B143	132MB6	37452	37452
23.7	2016	1.0	40.53	B123	132MB6	30000	10750
23.5	2013	1.4	62.59	B123	132MS4	30000	10792
23.2	2040	1.4	62.59	B123	132S4	30000	10816
23.2	2041	3.3	63.47	B153	132MS4	65000	65000
22.8	2069	3.3	63.47	B153	132S4	65000	65000
22.7	2086	2.0	64.88	B143	132MS4	37923	37923
22.7	2104	2.8	42.30	B153	132MB6	65000	65000
22.3	2115	2.0	64.88	B143	132S4	38034	38034
21.7	2196	1.6	44.16	B143	132MB6	38186	38186
21.2	2233	1.3	69.43	B123	132MS4	30000	10971
20.9	2264	1.2	69.43	B123	132S4	30000	10993
20.9	2265	1.9	70.43	B143	132MS4	38578	38578
20.7	2288	3.0	71.15	B153	132MS4	65000	65000
20.6	2296	1.9	70.43	B143	132S4	38686	38686
20.4	2319	2.9	71.15	B153	132S4	65000	65000
20.2	2364	2.4	47.53	B153	132MB6	65000	65000
19.9	2405	1.5	48.35	B143	132MB6	38893	38893
19.8	2393	1.2	74.42	B123	132MS4	30000	11082
19.5	2426	1.2	74.42	B123	132S4	30000	11103
19.1	2480	1.7	77.12	B143	132MS4	39283	39283
19.0	2515	2.7	50.56	B153	132MB6	65000	65000
19.0	2483	2.8	77.22	B153	132MS4	65000	65000
18.8	2514	1.7	77.12	B143	132S4	39388	39388
18.8	2518	2.7	77.22	B153	132S4	65000	65000
18.4	2574	1.2	80.04	B123	132MS4	30000	11191
18.1	2609	1.1	80.04	B123	132S4	30000	11210
18.1	2644	1.6	53.16	B143	132MB6	39610	39610
17.7	2701	1.0	54.30	B123	132MB6	30000	11209
17.6	2717	1.6	54.63	B143	132MB6	39811	39811
17.6	2718	2.5	54.64	B153	132MB6	65000	65000
17.5	2698	2.5	83.89	B153	132MS4	65000	65000
17.3	2735	2.5	83.89	B153	132S4	65000	65000
17.2	2751	1.6	85.54	B143	132MS4	40000	40000
17.0	2789	1.5	85.54	B143	132S4	40000	40000
16.8	2819	2.4	87.65	B153	132MS4	65000	65000
16.8	2848	2.4	57.27	B153	132MB6	65000	65000
16.5	2858	2.4	87.65	B153	132S4	65000	65000
16.4	2890	1.0	89.87	B123	132MS4	30000	11343
16.3	2935	1.5	59.02	B143	132MB6	40000	40000

5.1 B/BA GEARED MOTORS (50Hz)

5.50 kW

n2 [rpm]	M2 [Nm]	fs	i	Gear reducer	Motor	Fr2 D-S-P [N]	Fr2 C [N]
16.1	2930	1.0	89.87	B123	132S4	30000	11360
15.8	3030	2.3	60.92	B153	132MB6	65000	65000
15.8	2992	2.3	93.05	B153	132MS4	65000	65000
15.6	3027	1.4	94.13	B143	132MS4	40000	40000
15.6	3033	2.3	93.05	B153	132S4	65000	65000
15.4	3069	1.4	94.13	B143	132S4	40000	40000
15.1	3157	2.2	63.47	B153	132MB6	65000	65000
14.8	3227	1.3	64.88	B143	132MB6	40000	40000
14.3	3316	2.1	103.12	B153	132MS4	65000	65000
14.1	3362	2.0	103.12	B153	132S4	65000	65000
13.9	3403	1.3	105.83	B143	132MS4	40000	40000
13.7	3450	1.2	105.83	B143	132S4	40000	40000
13.6	3503	1.2	70.43	B143	132MB6	40000	40000
13.5	3538	1.9	71.15	B153	132MB6	65000	65000
13.1	3600	1.2	111.94	B143	132MS4	40000	40000
13.0	3649	1.2	111.94	B143	132S4	40000	40000
12.4	3835	1.1	77.12	B143	132MB6	40000	40000
12.4	3841	1.8	77.22	B153	132MB6	65000	65000
11.9	3984	1.7	123.88	B153	132MS4	65000	65000
11.8	4007	1.1	124.62	B143	132MS4	40000	40000
11.7	4039	1.7	123.88	B153	132S4	65000	65000
11.6	4063	1.1	124.62	B143	132S4	40000	40000
11.4	4172	1.6	83.89	B153	132MB6	65000	65000
11.2	4255	1.0	85.54	B143	132MB6	40000	40000
11.0	4359	1.6	87.65	B153	132MB6	65000	65000
10.9	4318	1.6	134.27	B153	132MS4	65000	65000
10.8	4377	1.6	134.27	B153	132S4	65000	65000
10.3	4628	1.5	93.05	B153	132MB6	65000	65000
9.8	4800	1.4	149.26	B153	132MS4	65000	65000
9.7	4866	1.4	149.26	B153	132S4	65000	65000
9.3	5128	1.3	103.12	B153	132MB6	65000	65000
8.9	5319	1.3	165.42	B153	132MS4	65000	65000
8.8	5393	1.3	165.42	B153	132S4	65000	65000
7.7	6161	1.1	123.88	B153	132MB6	65000	65000
7.2	6678	1.0	134.27	B153	132MB6	65000	65000

7.50 kW

n2 [rpm]	M2 [Nm]	fs	i	Gear reducer	Motor	Fr2 D-S-P [N]	Fr2 C [N]
187.0	345	1.0	7.81	B083	132M4	12415	3547
185.7	347	1.0	7.81	B083	132MA4	12437	3553
169.3	381	1.1	8.62	B083	132M4	12729	3637
168.2	383	1.1	8.62	B083	132MA4	12750	3643
139.1	463	1.0	10.49	B083	132M4	13350	3814

5.1 B/BA GEARED MOTORS (50Hz)

7.50 kW

n2 [rpm]	M2 [Nm]	fs	i	Gear reducer	Motor	Fr2 D-S-P [N]	Fr2 C [N]
138.2	467	1.0	10.49	B083	132MA4	13371	3820
126.0	512	1.1	11.59	B083	132M4	13660	3903
125.1	515	1.0	11.59	B083	132MA4	13682	3909
121.8	535	2.0	7.97	B123	160M6	24861	7103
117.0	551	2.4	12.48	B123	132M4	25149	7185
116.2	555	2.4	12.48	B123	132MA4	25194	7198
105.5	611	2.3	13.84	B123	132M4	25837	7382
104.7	615	2.3	13.84	B123	132MA4	25882	7395
100.8	646	2.0	9.62	B123	160M6	26105	7459
94.9	679	2.2	15.38	B123	132M4	26538	7582
94.3	684	2.2	15.38	B123	132MA4	26583	7595
93.9	694	2.1	10.33	B123	160M6	26580	7594
84.5	763	1.3	17.27	B103	132M4	19522	5578
84.0	768	1.3	17.27	B103	132MA4	19556	5587
78.6	820	1.9	18.58	B123	132M4	27795	7941
78.1	826	1.9	18.58	B123	132MA4	27840	7954
77.7	838	1.7	12.48	B123	160M6	27830	7952
76.6	841	1.2	19.06	B103	132M4	20012	5718
76.1	847	1.2	19.06	B103	132MA4	20046	5727
70.8	910	2.0	20.61	B123	132M4	28482	8138
70.4	916	2.0	20.61	B123	132MA4	28528	8151
70.1	929	1.6	13.84	B123	160M6	28513	8147
67.0	972	2.3	14.49	B143	160M6	28074	28074
64.1	1006	2.0	22.78	B123	132M4	29140	8326
63.7	1013	2.0	22.78	B123	132MA4	29185	8338
63.1	1032	1.5	15.38	B123	160M6	29198	8342
56.9	1144	2.0	17.04	B143	160M6	29244	29244
56.4	1143	1.8	25.89	B123	132M4	29965	8561
56.0	1151	1.8	25.89	B123	132MA4	30000	8574
53.2	1212	2.7	27.44	B143	132M4	29770	29770
53.1	1215	1.7	27.51	B123	132M4	30000	8671
52.8	1220	2.7	27.44	B143	132MA4	29819	29819
52.7	1223	1.7	27.51	B123	132MA4	30000	8683
52.2	1247	1.3	18.58	B123	160M6	30000	8684
52.0	1252	2.1	18.66	B143	160M6	29897	29897
48.6	1327	2.6	30.05	B143	132M4	30424	30424
48.3	1336	2.5	30.05	B143	132MA4	30474	30474
47.4	1360	1.5	30.79	B123	132M4	30000	8870
47.1	1383	1.3	20.61	B123	160M6	30000	8864
47.1	1369	1.5	30.79	B123	132MA4	30000	8882
46.7	1380	1.5	31.26	B123	132M4	30000	8896
46.4	1390	1.5	31.26	B123	132MA4	30000	8908
46.2	1409	2.1	21.00	B143	160M6	30743	30743
44.2	1457	2.3	33.01	B143	132M4	31099	31099
43.9	1467	2.3	33.01	B143	132MA4	31149	31149

5.1 B/BA GEARED MOTORS (50Hz)

7.50 kW

n2 [rpm]	M2 [Nm]	fs	i	Gear reducer	Motor	Fr2 D-S-P [N]	Fr2 C [N]
42.6	1529	1.3	22.78	B123	160M6	30000	9032
42.6	1529	2.1	22.77	B143	160M6	31320	31320
42.1	1531	1.3	34.68	B123	132M4	30000	9071
41.8	1542	1.3	34.68	B123	132MA4	30000	9082
39.8	1619	2.1	36.67	B143	132M4	31847	31847
39.5	1630	2.1	36.67	B143	132MA4	31895	31895
37.8	1720	1.9	25.63	B143	160M6	32147	32147
37.5	1738	1.2	25.89	B123	160M6	30000	9234
36.2	1779	2.0	40.29	B143	132M4	32504	32504
36.0	1790	1.1	40.53	B123	132M4	30000	9316
36.0	1791	1.9	40.29	B143	132MA4	32552	32552
35.8	1802	1.1	40.53	B123	132MA4	30000	9327
35.3	1846	1.1	27.51	B123	160M6	30000	9324
35.3	1842	1.8	27.44	B143	160M6	32618	32618
33.1	1950	1.8	44.16	B143	132M4	33133	33133
32.8	1963	1.8	44.16	B143	132MA4	33179	33179
32.5	1982	1.1	44.89	B123	132M4	30000	9464
32.3	1996	1.1	44.89	B123	132MA4	30000	9473
32.3	2017	1.7	30.05	B143	160M6	33229	33229
30.7	2099	2.8	47.53	B153	132M4	60664	60664
30.5	2113	2.7	47.53	B153	132MA4	60787	60787
30.2	2135	1.7	48.35	B143	132M4	33737	33737
30.0	2150	1.7	48.35	B143	132MA4	33782	33782
29.4	2216	1.5	33.01	B143	160M6	33845	33845
29.3	2199	1.1	49.80	B123	132M4	30000	9600
29.1	2214	1.0	49.80	B123	132MA4	30000	9608
28.9	2232	3.1	50.56	B153	132M4	61781	61781
28.8	2257	2.6	33.63	B153	160M6	61770	61770
28.7	2248	3.0	50.56	B153	132MA4	61906	61906
27.7	2350	2.5	35.02	B153	160M6	62506	62506
27.5	2347	1.8	53.16	B143	132M4	34349	34349
27.3	2363	1.8	53.16	B143	132MA4	34392	34392
26.9	2397	1.1	54.30	B123	132M4	30000	9700
26.7	2414	1.1	54.30	B123	132MA4	30000	9708
26.7	2412	1.8	54.63	B143	132M4	34520	34520
26.7	2413	2.8	54.64	B153	132M4	63203	63203
26.5	2461	1.4	36.67	B143	160M6	34507	34507
26.5	2429	1.8	54.63	B143	132MA4	34562	34562
26.5	2429	2.8	54.64	B153	132MA4	63331	63331
25.5	2529	2.7	57.27	B153	132M4	64077	64077
25.3	2546	2.7	57.27	B153	132MA4	64206	64206
25.0	2605	2.2	38.81	B153	160M6	64407	64407
24.7	2606	1.6	59.02	B143	132M4	34992	34992
24.6	2621	1.0	59.36	B123	132M4	30000	9790
24.6	2624	1.6	59.02	B143	132MA4	35033	35033

5.1 B/BA GEARED MOTORS (50Hz)

7.50 kW

n2 [rpm]	M2 [Nm]	fs	i	Gear reducer	Motor	Fr2 D-S-P [N]	Fr2 C [N]
24.4	2639	1.0	59.36	B123	132MA4	30000	9796
24.1	2704	1.3	40.29	B143	160M6	35068	35068
24.0	2690	2.5	60.92	B153	132M4	65000	65000
23.8	2708	2.5	60.92	B153	132MA4	65000	65000
23.3	2763	1.0	62.59	B123	132M4	30000	9836
23.2	2782	1.0	62.59	B123	132MA4	30000	9842
23.0	2802	2.4	63.47	B153	132M4	65000	65000
22.9	2839	2.0	42.30	B153	160M6	65000	65000
22.8	2822	2.4	63.47	B153	132MA4	65000	65000
22.5	2865	1.5	64.88	B143	132M4	35541	35541
22.3	2884	1.5	64.88	B143	132MA4	35580	35580
22.0	2964	1.2	44.16	B143	160M6	35582	35582
20.7	3110	1.4	70.43	B143	132M4	35986	35986
20.6	3131	1.4	70.43	B143	132MA4	36022	36022
20.5	3141	2.2	71.15	B153	132M4	65000	65000
20.4	3190	1.8	47.53	B153	160M6	65000	65000
20.4	3163	2.2	71.15	B153	132MA4	65000	65000
20.1	3245	1.1	48.35	B143	160M6	36052	36052
19.2	3394	2.0	50.56	B153	160M6	65000	65000
19.0	3423	3.2	51.00	B163	160M6	80000	65000
18.9	3405	1.3	77.12	B143	132M4	36439	36439
18.9	3410	2.0	77.22	B153	132M4	65000	65000
18.8	3428	1.2	77.12	B143	132MA4	36472	36472
18.8	3433	2.0	77.22	B153	132MA4	65000	65000
18.2	3568	1.2	53.16	B143	160M6	36497	36497
18.1	3600	3.1	53.63	B163	160M6	80000	65000
17.8	3667	1.2	54.63	B143	160M6	36615	36615
17.8	3667	1.9	54.64	B153	160M6	65000	65000
17.4	3704	1.8	83.89	B153	132M4	65000	65000
17.3	3729	1.8	83.89	B153	132MA4	65000	65000
17.1	3777	1.1	85.54	B143	132M4	36899	36899
17.0	3803	1.1	85.54	B143	132MA4	36927	36927
16.9	3844	1.8	57.27	B153	160M6	65000	65000
16.7	3870	1.8	87.65	B153	132M4	65000	65000
16.5	3897	1.8	87.65	B153	132MA4	65000	65000
16.5	3958	2.8	58.97	B163	160M6	80000	65000
16.4	3961	1.1	59.02	B143	160M6	36924	36924
15.9	4089	1.7	60.92	B153	160M6	65000	65000
15.7	4108	1.7	93.05	B153	132M4	65000	65000
15.6	4137	1.7	93.05	B153	132MA4	65000	65000
15.5	4156	1.0	94.13	B143	132M4	37259	37259
15.4	4185	1.0	94.13	B143	132MA4	37282	37282
15.3	4260	1.6	63.47	B153	160M6	65000	65000
14.2	4553	1.5	103.12	B153	132M4	65000	65000
14.1	4584	1.5	103.12	B153	132MA4	65000	65000

5.1 B/BA GEARED MOTORS (50Hz)

7.50 kW

n2 [rpm]	M2 [Nm]	fs	i	Gear reducer	Motor	Fr2 D-S-P [N]	Fr2 C [N]
13.9	4683	2.4	69.78	B163	160M6	80000	65000
13.6	4775	1.4	71.15	B153	160M6	65000	65000
12.6	5183	1.3	77.22	B153	160M6	65000	65000
12.6	5149	2.2	76.72	B163	160M6	80000	65000
11.8	5469	1.2	123.88	B153	132M4	65000	65000
11.7	5507	1.2	123.88	B153	132MA4	65000	65000
11.6	5631	1.2	83.89	B153	160M6	65000	65000
11.1	5883	1.2	87.65	B153	160M6	65000	65000
11.1	5875	1.9	87.54	B163	160M6	80000	65000
10.9	5928	1.2	134.27	B153	132M4	65000	65000
10.8	5969	1.1	134.27	B153	132MA4	65000	65000
10.4	6245	1.1	93.05	B153	160M6	65000	65000
10.1	6460	1.7	96.25	B163	160M6	80000	65000
9.8	6590	1.0	149.26	B153	132M4	65000	65000
9.7	6636	1.0	149.26	B153	132MA4	65000	65000
9.3	6976	1.6	103.93	B163	160M6	80000	65000
8.5	7670	1.4	114.27	B163	160M6	80000	65000
7.7	8476	1.3	126.29	B163	160M6	80000	65000
7.0	9320	1.2	138.85	B163	160M6	80000	65000
6.3	10392	1.1	154.83	B163	160M6	80000	65000

9.20 kW

n2 [rpm]	M2 [Nm]	fs	i	Gear reducer	Motor	Fr2 D-S-P [N]	Fr2 C [N]
182.0	434	1.9	7.97	B123	132MB4	21927	6265
150.7	525	1.8	9.62	B123	132MB4	23049	6586
140.3	564	2.2	10.33	B123	132MB4	23480	6708
116.2	681	1.9	12.48	B123	132MB4	24616	7033
104.7	755	1.9	13.84	B123	132MB4	25241	7212
100.1	790	2.4	14.49	B143	132MB4	24782	24782
94.3	839	1.8	15.38	B123	132MB4	25871	7392
85.1	929	2.5	17.04	B143	132MB4	25842	25842
84.0	942	1.1	17.27	B103	132MB4	19056	5445
78.1	1013	1.6	18.58	B123	132MB4	26980	7709
77.7	1017	2.6	18.66	B143	132MB4	26435	26435
70.4	1124	1.6	20.61	B123	132MB4	27573	7878
69.1	1145	2.3	21.00	B143	132MB4	27208	27208
63.7	1242	1.6	22.78	B123	132MB4	28129	8037
63.7	1242	2.6	22.77	B143	132MB4	27737	27737
56.6	1398	2.1	25.63	B143	132MB4	28500	28500
56.0	1412	1.4	25.89	B123	132MB4	28809	8231
52.8	1497	2.2	27.44	B143	132MB4	28937	28937
52.7	1500	1.3	27.51	B123	132MB4	29117	8319
48.3	1639	2.1	30.05	B143	132MB4	29508	29508

5.1 B/BA GEARED MOTORS (50Hz)

9.20 kW

n2 [rpm]	M2 [Nm]	fs	i	Gear reducer	Motor	Fr2 D-S-P [N]	Fr2 C [N]
47.1	1679	1.2	30.79	B123	132MB4	29660	8474
46.4	1705	1.2	31.26	B123	132MB4	29729	8494
43.9	1800	1.9	33.01	B143	132MB4	30087	30087
41.8	1891	1.1	34.68	B123	132MB4	30000	8623
39.5	2000	1.7	36.67	B143	132MB4	30716	30716
36.0	2197	1.6	40.29	B143	132MB4	31257	31257
34.3	2307	2.5	42.30	B153	132MB4	58089	58089
32.8	2408	1.4	44.16	B143	132MB4	31759	31759
30.5	2592	2.2	47.53	B153	132MB4	60085	60085
30.0	2637	1.4	48.35	B143	132MB4	32228	32228
28.7	2757	2.5	50.56	B153	132MB4	61158	61158
27.3	2899	1.5	53.16	B143	132MB4	32683	32683
26.5	2979	1.4	54.63	B143	132MB4	32806	32806
26.5	2980	2.3	54.64	B153	132MB4	62523	62523
25.3	3123	2.2	57.27	B153	132MB4	63359	63359
24.6	3218	1.3	59.02	B143	132MB4	33136	33136
23.8	3322	2.1	60.92	B153	132MB4	64467	64467
22.8	3461	2.0	63.47	B153	132MB4	65000	65000
22.3	3538	1.2	64.88	B143	132MB4	33494	33494
20.6	3841	1.1	70.43	B143	132MB4	33758	33758
20.4	3880	1.8	71.15	B153	132MB4	65000	65000
18.8	4205	1.0	77.12	B143	132MB4	33993	33993
18.8	4211	1.6	77.22	B153	132MB4	65000	65000
17.3	4575	1.5	83.89	B153	132MB4	65000	65000
16.5	4780	1.4	87.65	B153	132MB4	65000	65000
15.6	5074	1.3	93.05	B153	132MB4	65000	65000
14.1	5623	1.2	103.12	B153	132MB4	65000	65000
11.7	6755	1.0	123.88	B153	132MB4	65000	65000

11.00 kW

n2 [rpm]	M2 [Nm]	fs	i	Gear reducer	Motor	Fr2 D-S-P [N]	Fr2 C [N]
185.2	511	1.6	7.97	B123	160MA4	21443	6126
180.8	523	1.6	7.97	B123	132MC4	21575	6164
180.8	523	1.6	7.97	B123	160S4	21575	6164
153.3	617	1.5	9.62	B123	160MA4	22483	6424
149.7	632	1.5	9.62	B123	132MC4	22616	6462
149.7	632	1.5	9.62	B123	160S4	22616	6462
142.7	662	1.8	10.33	B123	160MA4	22879	6537
139.3	678	1.8	10.33	B123	132MC4	23011	6575
139.3	678	1.8	10.33	B123	160S4	23011	6575
121.8	784	1.4	7.97	B123	160L6	23714	6775
121.3	779	2.3	11.87	B143	132MC4	23137	23137
121.3	779	2.3	11.87	B143	160S4	23137	23137

5.1 B/BA GEARED MOTORS (50Hz)

11.00 kW

n2 [rpm]	M2 [Nm]	fs	i	Gear reducer	Motor	Fr2 D-S-P [N]	Fr2 C [N]
118.2	800	1.6	12.48	B123	160MA4	23911	6832
115.4	819	1.6	12.48	B123	132MC4	24042	6869
115.4	819	1.6	12.48	B123	160S4	24042	6869
106.5	887	1.6	13.84	B123	160MA4	24471	6992
104.0	909	1.6	13.84	B123	132MC4	24599	7028
104.0	909	1.6	13.84	B123	160S4	24599	7028
101.8	928	2.0	14.49	B143	160MA4	24187	24187
100.8	947	1.4	9.62	B123	160L6	24720	7063
99.4	951	2.0	14.49	B143	132MC4	24331	24331
99.4	951	2.0	14.49	B143	160S4	24331	24331
95.9	986	1.5	15.38	B123	160MA4	25027	7151
93.9	1017	1.4	10.33	B123	160L6	25092	7169
93.6	1010	1.5	15.38	B123	132MC4	25153	7186
93.6	1010	1.5	15.38	B123	160S4	25153	7186
89.5	1067	2.0	10.84	B143	160L6	24927	24927
86.6	1092	2.1	17.04	B143	160MA4	25160	25160
84.5	1119	2.1	17.04	B143	132MC4	25303	25303
84.5	1119	2.1	17.04	B143	160S4	25303	25303
81.7	1168	1.9	11.87	B143	160L6	25464	25464
79.4	1191	1.3	18.58	B123	160MA4	25985	7424
79.1	1196	2.2	18.66	B143	160MA4	25699	25699
77.7	1229	1.2	12.48	B123	160L6	26034	7438
77.5	1220	1.3	18.58	B123	132MC4	26102	7458
77.5	1220	1.3	18.58	B123	160S4	26102	7458
77.2	1225	2.1	18.66	B143	132MC4	25841	25841
77.2	1225	2.1	18.66	B143	160S4	25841	25841
76.7	1245	2.6	12.64	B153	160L6	45297	45297
71.6	1321	1.4	20.61	B123	160MA4	26483	7567
70.2	1346	1.9	21.00	B143	160MA4	26394	26394
70.1	1363	1.1	13.84	B123	160L6	26520	7577
69.9	1353	1.3	20.61	B123	132MC4	26594	7598
69.9	1353	1.3	20.61	B123	160S4	26594	7598
69.2	1379	2.6	14.01	B153	160L6	46724	46724
68.6	1379	1.9	21.00	B143	132MC4	26533	26533
68.6	1379	1.9	21.00	B143	160S4	26533	26533
67.0	1426	1.6	14.49	B143	160L6	26627	26627
64.8	1460	2.1	22.77	B143	160MA4	26864	26864
64.7	1460	1.4	22.78	B123	160MA4	26938	7696
63.2	1496	1.4	22.78	B123	132MC4	27042	7726
63.2	1496	1.4	22.78	B123	160S4	27042	7726
63.2	1495	2.1	22.77	B143	132MC4	27002	27002
63.2	1495	2.1	22.77	B143	160S4	27002	27002
63.1	1514	1.0	15.38	B123	160L6	26984	7710
63.0	1516	2.4	15.40	B153	160L6	48069	48069
57.6	1643	1.8	25.63	B143	160MA4	27533	27533

5.1 B/BA GEARED MOTORS (50Hz)

11.00 kW

n2 [rpm]	M2 [Nm]	fs	i	Gear reducer	Motor	Fr2 D-S-P [N]	Fr2 C [N]
57.0	1659	1.2	25.89	B123	160MA4	27472	7849
56.9	1678	1.4	17.04	B143	160L6	27541	27541
56.2	1683	1.8	25.63	B143	132MC4	27666	27666
56.2	1683	1.8	25.63	B143	160S4	27666	27666
55.6	1700	1.2	25.89	B123	132MC4	27566	7876
55.6	1700	1.2	25.89	B123	160S4	27566	7876
53.7	1759	1.9	27.44	B143	160MA4	27910	27910
53.6	1763	1.1	27.51	B123	160MA4	27705	7916
52.5	1802	1.8	27.44	B143	132MC4	28041	28041
52.5	1802	1.8	27.44	B143	160S4	28041	28041
52.3	1806	1.1	27.51	B123	132MC4	27793	7941
52.3	1806	1.1	27.51	B123	160S4	27793	7941
52.3	1827	2.4	18.56	B153	160L6	50804	50804
52.0	1837	1.4	18.66	B143	160L6	28032	28032
49.1	1926	1.8	30.05	B143	160MA4	28396	28396
47.9	1974	1.0	30.79	B123	160MA4	28096	8027
47.9	1973	1.7	30.05	B143	132MC4	28521	28521
47.9	1973	1.7	30.05	B143	160S4	28521	28521
47.2	2004	1.0	31.26	B123	160MA4	28143	8041
47.2	2024	2.3	20.56	B153	160L6	52359	52359
46.2	2067	1.4	21.00	B143	160L6	28645	28645
44.7	2116	1.6	33.01	B143	160MA4	28879	28879
43.9	2156	2.7	33.63	B153	160MA4	53512	53512
43.6	2167	1.6	33.01	B143	132MC4	28998	28998
43.6	2167	1.6	33.01	B143	160S4	28998	28998
42.8	2208	2.6	33.63	B153	132MC4	53886	53886
42.8	2208	2.6	33.63	B153	160S4	53886	53886
42.6	2242	1.4	22.77	B143	160L6	29044	29044
42.1	2245	2.6	35.02	B153	160MA4	54142	54142
41.1	2299	2.5	35.02	B153	160S4	54519	54519
40.7	2349	2.1	23.86	B153	160L6	54664	54664
40.2	2351	1.5	36.67	B143	160MA4	29389	29389
39.3	2408	1.4	36.67	B143	132MC4	29500	29500
39.3	2408	1.4	36.67	B143	160S4	29500	29500
38.5	2480	2.0	25.19	B153	160L6	55521	55521
38.0	2487	2.3	38.81	B153	160MA4	55766	55766
37.8	2523	1.3	25.63	B143	160L6	29586	29586
37.1	2548	2.3	38.81	B153	160S4	56150	56150
36.6	2583	1.3	40.29	B143	160MA4	29812	29812
35.7	2645	1.3	40.29	B143	132MC4	29915	29915
35.7	2645	1.3	40.29	B143	160S4	29915	29915
35.3	2702	1.2	27.44	B143	160L6	29876	29876
34.9	2711	2.1	42.30	B153	160MA4	57150	57150
34.4	2779	2.1	28.23	B153	160L6	57351	57351
34.0	2777	2.1	42.30	B153	132MC4	57540	57540

5.1 B/BA GEARED MOTORS (50Hz)

11.00 kW

n2 [rpm]	M2 [Nm]	fs	i	Gear reducer	Motor	Fr2 D-S-P [N]	Fr2 C [N]
34.0	2777	2.1	42.30	B153	160S4	57540	57540
33.7	2835	2.6	28.80	B163	160L6	80000	65000
33.4	2831	1.2	44.16	B143	160MA4	30190	30190
32.6	2899	1.2	44.16	B143	132MC4	30283	30283
32.6	2899	1.2	44.16	B143	160S4	30283	30283
32.3	2958	1.1	30.05	B143	160L6	30227	30227
32.0	2988	1.9	30.35	B153	160L6	58529	58529
31.4	3044	2.7	30.92	B163	160L6	80000	65000
31.0	3047	1.9	47.53	B153	160MA4	59058	59058
30.5	3099	1.2	48.35	B143	160MA4	30524	30524
30.3	3121	1.9	47.53	B153	132MC4	59455	59455
30.3	3121	1.9	47.53	B153	160S4	59455	59455
29.8	3175	1.1	48.35	B143	132MC4	30605	30605
29.8	3175	1.1	48.35	B143	160S4	30605	30605
29.4	3250	1.0	33.01	B143	160L6	30547	30547
29.2	3241	2.1	50.56	B153	160MA4	60082	60082
28.9	3269	3.4	51.00	B163	160MA4	80000	65000
28.8	3311	1.7	33.63	B153	160L6	60224	60224
28.5	3320	2.1	50.56	B153	132MC4	60483	60483
28.5	3320	2.1	50.56	B153	160S4	60483	60483
28.3	3372	2.6	34.25	B163	160L6	80000	65000
28.2	3348	3.3	51.00	B163	160S4	80000	65000
27.7	3407	1.3	53.16	B143	160MA4	30825	30825
27.7	3447	1.7	35.02	B153	160L6	60897	60897
27.5	3438	3.2	53.63	B163	160MA4	80000	65000
27.1	3490	1.2	53.16	B143	132MC4	30893	30893
27.1	3490	1.2	53.16	B143	160S4	30893	30893
27.0	3501	1.2	54.63	B143	160MA4	30902	30902
27.0	3502	2.0	54.64	B153	160MA4	61380	61380
26.9	3521	3.2	53.63	B163	160S4	80000	65000
26.4	3587	1.2	54.63	B143	132MC4	30965	30965
26.4	3587	1.2	54.63	B143	160S4	30965	30965
26.4	3587	1.9	54.64	B153	132MC4	61784	61784
26.4	3587	1.9	54.64	B153	160S4	61784	61784
25.8	3671	1.9	57.27	B153	160MA4	62173	62173
25.8	3708	2.4	37.66	B163	160L6	80000	65000
25.1	3760	1.8	57.27	B153	132MC4	62580	62580
25.1	3760	1.8	57.27	B153	160S4	62580	62580
25.0	3783	1.1	59.02	B143	160MA4	31091	31091
25.0	3820	1.5	38.81	B153	160L6	62624	62624
25.0	3780	2.9	58.97	B163	160MA4	80000	65000
24.4	3875	1.1	59.02	B143	132MC4	31141	31141
24.4	3875	1.1	59.02	B143	160S4	31141	31141
24.4	3871	2.9	58.97	B163	160S4	80000	65000
24.2	3905	1.8	60.92	B153	160MA4	63222	63222

5.1 B/BA GEARED MOTORS (50Hz)

11.00 kW

n2 [rpm]	M2 [Nm]	fs	i	Gear reducer	Motor	Fr2 D-S-P [N]	Fr2 C [N]
23.9	4002	2.3	40.65	B163	160L6	80000	65000
23.6	4000	1.7	60.92	B153	132MC4	63631	63631
23.6	4000	1.7	60.92	B153	160S4	63631	63631
23.2	4068	1.7	63.47	B153	160MA4	63921	63921
22.9	4164	1.4	42.30	B153	160L6	64086	64086
22.7	4159	1.0	64.88	B143	160MA4	31262	31262
22.7	4167	1.6	63.47	B153	132MC4	64332	64332
22.7	4167	1.6	63.47	B153	160S4	64332	64332
22.2	4260	1.0	64.88	B143	132MC4	31294	31294
22.2	4260	1.0	64.88	B143	160S4	31294	31294
21.5	4439	2.0	45.09	B163	160L6	80000	65000
21.1	4472	2.5	69.78	B163	160MA4	80000	65000
20.7	4560	1.5	71.15	B153	160MA4	65000	65000
20.6	4581	2.4	69.78	B163	160S4	80000	65000
20.4	4679	1.2	47.53	B153	160L6	65000	65000
20.2	4671	1.5	71.15	B153	132MC4	65000	65000
20.2	4671	1.5	71.15	B153	160S4	65000	65000
19.2	4978	1.4	50.56	B153	160L6	65000	65000
19.2	4917	2.3	76.72	B163	160MA4	80000	65000
19.1	4950	1.4	77.22	B153	160MA4	65000	65000
19.0	5021	2.2	51.00	B163	160L6	80000	65000
18.8	5037	2.2	76.72	B163	160S4	80000	65000
18.6	5070	1.3	77.22	B153	132MC4	65000	65000
18.6	5070	1.3	77.22	B153	160S4	65000	65000
18.1	5279	2.1	53.63	B163	160L6	80000	65000
17.8	5379	1.3	54.64	B153	160L6	65000	65000
17.6	5377	1.3	83.89	B153	160MA4	65000	65000
17.2	5508	1.2	83.89	B153	132MC4	65000	65000
17.2	5508	1.2	83.89	B153	160S4	65000	65000
16.9	5638	1.2	57.27	B153	160L6	65000	65000
16.9	5611	2.0	87.54	B163	160MA4	80000	65000
16.8	5618	1.2	87.65	B153	160MA4	65000	65000
16.5	5805	1.9	58.97	B163	160L6	80000	65000
16.5	5747	1.9	87.54	B163	160S4	80000	65000
16.4	5755	1.2	87.65	B153	132MC4	65000	65000
16.4	5755	1.2	87.65	B153	160S4	65000	65000
15.9	5964	1.1	93.05	B153	160MA4	65000	65000
15.9	5997	1.1	60.92	B153	160L6	65000	65000
15.5	6109	1.1	93.05	B153	132MC4	65000	65000
15.5	6109	1.1	93.05	B153	160S4	65000	65000
15.3	6248	1.1	63.47	B153	160L6	65000	65000
15.3	6169	1.8	96.25	B163	160MA4	80000	65000
15.0	6319	1.8	96.25	B163	160S4	80000	65000
14.3	6610	1.0	103.12	B153	160MA4	65000	65000
14.2	6662	1.7	103.93	B163	160MA4	80000	65000

5.1 B/BA GEARED MOTORS (50Hz)

11.00 kW

n2 [rpm]	M2 [Nm]	fs	i	Gear reducer	Motor	Fr2 D-S-P [N]	Fr2 C [N]
14.0	6770	1.0	103.12	B153	132MC4	65000	65000
14.0	6770	1.0	103.12	B153	160S4	65000	65000
13.9	6869	1.6	69.78	B163	160L6	80000	65000
13.9	6824	1.6	103.93	B163	160S4	80000	65000
12.9	7325	1.5	114.27	B163	160MA4	80000	65000
12.6	7552	1.5	76.72	B163	160L6	80000	65000
12.6	7503	1.5	114.27	B163	160S4	80000	65000
11.7	8095	1.4	126.29	B163	160MA4	80000	65000
11.4	8292	1.3	126.29	B163	160S4	80000	65000
11.1	8617	1.3	87.54	B163	160L6	80000	65000
10.6	8900	1.2	138.85	B163	160MA4	80000	65000
10.4	9117	1.2	138.85	B163	160S4	80000	65000
10.1	9475	1.2	96.25	B163	160L6	80000	65000
9.5	9924	1.1	154.83	B163	160MA4	80000	65000
9.3	10231	1.1	103.93	B163	160L6	80000	65000
9.3	10166	1.1	154.83	B163	160S4	80000	65000

15.00 kW

n2 [rpm]	M2 [Nm]	fs	i	Gear reducer	Motor	Fr2 D-S-P [N]	Fr2 C [N]
185.2	696	1.2	7.97	B123	160LA4	20589	5883
153.3	841	1.1	9.62	B123	160LA4	21453	6129
142.7	903	1.3	10.33	B123	160LA4	21771	6220
136.1	947	1.8	10.84	B143	160LA4	21649	21649
124.3	1037	1.7	11.87	B143	160LA4	22112	22112
123.0	1058	1.0	7.97	B123	180L6	22361	6389
118.2	1091	1.2	12.48	B123	160LA4	22574	6450
106.5	1210	1.1	13.84	B123	160LA4	22988	6568
101.9	1278	1.0	9.62	B123	180L6	23100	6600
101.8	1266	1.5	14.49	B143	160LA4	23110	23110
95.9	1345	1.1	15.38	B123	160LA4	23379	6680
95.8	1346	2.7	15.40	B153	160LA4	41822	41822
94.8	1373	1.1	10.33	B123	180L6	23356	6673
93.4	1394	2.3	10.49	B153	180L6	42116	42116
90.4	1440	1.5	10.84	B143	180L6	23641	23641
86.6	1489	1.6	17.04	B143	160LA4	23893	23893
82.6	1577	1.4	11.87	B143	180L6	24062	24062
79.5	1622	2.5	18.56	B153	160LA4	44196	44196
79.1	1631	1.6	18.66	B143	160LA4	24312	24312
77.5	1680	1.9	12.64	B153	180L6	44499	44499
71.7	1797	2.4	20.56	B153	160LA4	45545	45545
71.6	1801	1.0	20.61	B123	160LA4	24275	6936
70.2	1835	1.4	21.00	B143	160LA4	24832	24832
69.9	1862	1.9	14.01	B153	180L6	45852	45852

5.1 B/BA GEARED MOTORS (50Hz)

15.00 kW

n2 [rpm]	M2 [Nm]	fs	i	Gear reducer	Motor	Fr2 D-S-P [N]	Fr2 C [N]
67.7	1925	1.2	14.49	B143	180L6	24931	24931
64.8	1990	1.6	22.77	B143	160LA4	25171	25171
64.7	1991	1.0	22.78	B123	160LA4	24497	6999
63.6	2046	1.8	15.40	B153	180L6	47121	47121
61.8	2085	2.1	23.86	B153	160LA4	47544	47544
58.6	2202	2.2	25.19	B153	160LA4	48287	48287
57.6	2240	1.3	25.63	B143	160LA4	25627	25627
57.5	2264	1.0	17.04	B143	180L6	25559	25559
53.7	2399	1.4	27.44	B143	160LA4	25870	25870
52.8	2465	1.8	18.56	B153	180L6	49686	49686
52.5	2479	1.0	18.66	B143	180L6	25869	25869
52.2	2468	2.3	28.23	B153	160LA4	49873	49873
49.1	2626	1.3	30.05	B143	160LA4	26162	26162
48.6	2653	2.2	30.35	B153	160LA4	50894	50894
47.7	2732	1.7	20.56	B153	180L6	51133	51133
46.7	2790	1.0	21.00	B143	180L6	26220	26220
44.7	2885	1.2	33.01	B143	160LA4	26424	26424
44.7	2916	2.6	21.94	B163	180L6	80000	65000
43.9	2940	2.0	33.63	B153	160LA4	52362	52362
43.1	2994	2.9	34.25	B163	160LA4	80000	65000
43.0	3026	1.1	22.77	B143	180L6	26421	26421
42.1	3061	1.9	35.02	B153	160LA4	52944	52944
41.1	3170	1.5	23.86	B153	180L6	53262	53262
40.5	3212	2.4	24.17	B163	180L6	80000	65000
40.2	3205	1.1	36.67	B143	160LA4	26662	26662
39.2	3292	2.7	37.66	B163	160LA4	80000	65000
38.9	3347	1.5	25.19	B153	180L6	54049	54049
38.0	3392	1.7	38.81	B153	160LA4	54439	54439
36.9	3531	2.3	26.58	B163	180L6	80000	65000
36.3	3553	2.6	40.65	B163	160LA4	80000	65000
34.9	3697	1.6	42.30	B153	160LA4	55704	55704
34.7	3751	1.5	28.23	B153	180L6	55717	55717
34.0	3827	1.9	28.80	B163	180L6	80000	65000
32.7	3941	2.2	45.09	B163	160LA4	80000	65000
32.3	4032	1.4	30.35	B153	180L6	56783	56783
31.7	4109	2.0	30.92	B163	180L6	80000	65000
31.0	4155	1.4	47.53	B153	160LA4	57433	57433
29.2	4419	1.5	50.56	B153	160LA4	58353	58353
29.1	4469	1.3	33.63	B153	180L6	58306	58306
28.9	4458	2.5	51.00	B163	160LA4	80000	65000
28.6	4551	1.9	34.25	B163	180L6	80000	65000
28.0	4653	1.2	35.02	B153	180L6	58905	58905
27.5	4688	2.4	53.63	B163	160LA4	80000	65000
27.0	4776	1.4	54.64	B153	160LA4	59512	59512
26.0	5004	1.8	37.66	B163	180L6	80000	65000

5.1 B/BA GEARED MOTORS (50Hz)

15.00 kW

n2 [rpm]	M2 [Nm]	fs	i	Gear reducer	Motor	Fr2 D-S-P [N]	Fr2 C [N]
25.8	5006	1.4	57.27	B153	160LA4	60215	60215
25.3	5156	1.1	38.81	B153	180L6	60434	60434
25.0	5154	2.2	58.97	B163	160LA4	80000	65000
24.2	5325	1.3	60.92	B153	160LA4	61139	61139
24.1	5402	1.7	40.65	B163	180L6	80000	65000
23.2	5620	1.0	42.30	B153	180L6	61713	61713
23.2	5548	1.2	63.47	B153	160LA4	61750	61750
21.7	5991	1.4	45.09	B163	180L6	80000	65000
21.1	6099	1.8	69.78	B163	160LA4	80000	65000
20.7	6219	1.1	71.15	B153	160LA4	63449	63449
19.4	6718	1.0	50.56	B153	180L6	64347	64347
19.2	6776	1.6	51.00	B163	180L6	80000	65000
19.2	6706	1.7	76.72	B163	160LA4	80000	65000
19.1	6750	1.0	77.22	B153	160LA4	64660	64660
18.3	7126	1.6	53.63	B163	180L6	80000	65000
16.9	7651	1.5	87.54	B163	160LA4	80000	65000
16.6	7835	1.4	58.97	B163	180L6	80000	65000
15.3	8413	1.3	96.25	B163	160LA4	80000	65000
14.2	9084	1.2	103.93	B163	160LA4	80000	65000
14.0	9271	1.2	69.78	B163	180L6	80000	65000
12.9	9988	1.1	114.27	B163	160LA4	80000	65000
12.8	10194	1.1	76.72	B163	180L6	80000	65000
11.7	11038	1.0	126.29	B163	160LA4	80000	65000

18.50 kW

n2 [rpm]	M2 [Nm]	fs	i	Gear reducer	Motor	Fr2 D-S-P [N]	Fr2 C [N]
142.2	1118	1.1	10.33	B123	180M4	20814	5947
140.1	1135	2.2	10.49	B153	180M4	36966	36966
135.6	1172	1.4	10.84	B143	180M4	20959	20959
123.9	1284	1.4	11.87	B143	180M4	21354	21354
116.3	1367	2.0	12.64	B153	180M4	39075	39075
104.9	1515	1.9	14.01	B153	180M4	40275	40275
101.5	1567	1.2	14.49	B143	180M4	22181	22181
95.5	1666	2.2	15.40	B153	180M4	41402	41402
93.4	1719	1.9	10.49	B153	200LA6	41639	41639
90.4	1776	1.2	10.84	B143	200LA6	22569	22569
86.3	1843	1.3	17.04	B143	180M4	22796	22796
82.6	1945	1.2	11.87	B143	200LA6	22889	22889
79.2	2007	2.0	18.56	B153	180M4	43683	43683
78.8	2018	1.3	18.66	B143	180M4	23109	23109
77.5	2072	1.6	12.64	B153	200LA6	43924	43924
71.5	2224	1.9	20.56	B153	180M4	44973	44973
70.0	2271	1.1	21.00	B143	180M4	23476	23476

5.1 B/BA GEARED MOTORS (50Hz)

18.50 kW

n2 [rpm]	M2 [Nm]	fs	i	Gear reducer	Motor	Fr2 D-S-P [N]	Fr2 C [N]
69.9	2296	1.6	14.01	B153	200LA6	45215	45215
64.6	2463	1.3	22.77	B143	180M4	23698	23698
63.6	2524	1.4	15.40	B153	200LA6	46421	46421
61.6	2581	1.7	23.86	B153	180M4	46874	46874
59.8	2685	2.7	16.39	B163	200LA6	75172	65000
58.4	2724	1.8	25.19	B153	180M4	47578	47578
57.4	2772	1.0	25.63	B143	180M4	23967	23967
55.3	2875	2.7	26.58	B163	180M4	76928	65000
54.4	2952	2.5	18.02	B163	200LA6	77244	65000
53.6	2968	1.1	27.44	B143	180M4	24090	24090
52.8	3041	1.4	18.56	B153	200LA6	48842	48842
52.1	3054	1.9	28.23	B153	180M4	49073	49073
51.0	3115	2.4	28.80	B163	180M4	78709	65000
49.1	3270	2.4	19.96	B163	200LA6	79518	65000
48.9	3250	1.0	30.05	B143	180M4	24210	24210
48.4	3283	1.8	30.35	B153	180M4	50031	50031
47.7	3370	1.4	20.56	B153	200LA6	50198	50198
47.5	3345	2.5	30.92	B163	180M4	80000	65000
44.7	3596	2.1	21.94	B163	200LA6	80000	65000
43.7	3638	1.6	33.63	B153	180M4	51401	51401
42.9	3705	2.3	34.25	B163	180M4	80000	65000
42.0	3788	1.5	35.02	B153	180M4	51942	51942
41.1	3910	1.2	23.86	B153	200LA6	52177	52177
40.5	3961	1.9	24.17	B163	200LA6	80000	65000
39.0	4074	2.2	37.66	B163	180M4	80000	65000
38.9	4128	1.2	25.19	B153	200LA6	52903	52903
37.9	4198	1.4	38.81	B153	180M4	53324	53324
36.9	4355	1.8	26.58	B163	200LA6	80000	65000
36.2	4397	2.1	40.65	B163	180M4	80000	65000
34.8	4575	1.3	42.30	B153	180M4	54484	54484
34.7	4626	1.2	28.23	B153	200LA6	54433	54433
34.0	4720	1.6	28.80	B163	200LA6	80000	65000
32.6	4877	1.8	45.09	B163	180M4	80000	65000
32.3	4973	1.2	30.35	B153	200LA6	55403	55403
31.7	5068	1.6	30.92	B163	200LA6	80000	65000
30.9	5142	1.1	47.53	B153	180M4	56057	56057
29.1	5512	1.0	33.63	B153	200LA6	56776	56776
29.1	5469	1.2	50.56	B153	180M4	56886	56886
28.8	5517	2.0	51.00	B163	180M4	80000	65000
28.6	5613	1.5	34.25	B163	200LA6	80000	65000
28.0	5738	1.0	35.02	B153	200LA6	57313	57313
27.4	5801	1.9	53.63	B163	180M4	80000	65000
26.9	5910	1.2	54.64	B153	180M4	57922	57922
26.0	6172	1.4	37.66	B163	200LA6	80000	65000
25.7	6195	1.1	57.27	B153	180M4	58546	58546

5.1 B/BA GEARED MOTORS (50Hz)

18.50 kW

n2 [rpm]	M2 [Nm]	fs	i	Gear reducer	Motor	Fr2 D-S-P [N]	Fr2 C [N]
24.9	6378	1.7	58.97	B163	180M4	80000	65000
24.1	6590	1.0	60.92	B153	180M4	59360	59360
24.1	6662	1.4	40.65	B163	200LA6	80000	65000
21.7	7389	1.2	45.09	B163	200LA6	80000	65000
21.1	7547	1.5	69.78	B163	180M4	80000	65000
19.2	8358	1.3	51.00	B163	200LA6	80000	65000
19.2	8298	1.3	76.72	B163	180M4	80000	65000
18.3	8788	1.3	53.63	B163	200LA6	80000	65000
16.8	9469	1.2	87.54	B163	180M4	80000	65000
16.6	9663	1.1	58.97	B163	200LA6	80000	65000
15.3	10411	1.1	96.25	B163	180M4	80000	65000

22.00 kW

n2 [rpm]	M2 [Nm]	fs	i	Gear reducer	Motor	Fr2 D-S-P [N]	Fr2 C [N]
140.1	1350	1.8	10.49	B153	180L4	36651	36651
135.6	1394	1.2	10.84	B143	180L4	20251	20251
123.9	1527	1.1	11.87	B143	180L4	20579	20579
116.3	1626	1.7	12.64	B153	180L4	38696	38696
104.9	1802	1.6	14.01	B153	180L4	39855	39855
101.5	1863	1.0	14.49	B143	180L4	21235	21235
95.5	1981	1.8	15.40	B153	180L4	40939	40939
93.4	2045	1.6	10.49	B153	200LB6	41162	41162
90.4	2112	1.0	10.84	B143	200LB6	21497	21497
86.3	2192	1.1	17.04	B143	180L4	21684	21684
82.6	2313	2.4	11.87	B163	200LB6	67760	65000
79.2	2387	1.7	18.56	B153	180L4	43126	43126
78.8	2400	1.1	18.66	B143	180L4	21891	21891
77.5	2464	1.3	12.64	B153	200LB6	43349	43349
76.5	2496	2.5	12.81	B163	200LB6	69268	65000
71.5	2645	1.6	20.56	B153	180L4	44355	44355
69.9	2730	1.3	14.01	B153	200LB6	44578	44578
69.6	2745	2.4	14.08	B163	200LB6	71175	65000
67.0	2823	2.1	21.94	B163	180L4	71998	65000
64.6	2929	1.1	22.77	B143	180L4	22211	22211
63.6	3001	1.2	15.40	B153	200LB6	45720	45720
63.1	3025	2.4	15.52	B163	200LB6	73163	65000
61.6	3069	1.5	23.86	B153	180L4	46158	46158
60.8	3109	2.4	24.17	B163	180L4	73993	65000
59.8	3193	2.2	16.39	B163	200LB6	74284	65000
58.4	3240	1.5	25.19	B153	180L4	46821	46821
55.3	3419	2.2	26.58	B163	180L4	75978	65000
54.4	3511	2.1	18.02	B163	200LB6	76268	65000
52.8	3616	1.2	18.56	B153	200LB6	47998	47998

5.1 B/BA GEARED MOTORS (50Hz)

22.00 kW

n2 [rpm]	M2 [Nm]	fs	i	Gear reducer	Motor	Fr2 D-S-P [N]	Fr2 C [N]
52.1	3631	1.6	28.23	B153	180L4	48226	48226
51.0	3705	2.0	28.80	B163	180L4	77679	65000
49.1	3889	2.0	19.96	B163	200LB6	78437	65000
48.4	3904	1.5	30.35	B153	180L4	49120	49120
47.7	4007	1.2	20.56	B153	200LB6	49263	49263
47.5	3978	2.1	30.92	B163	180L4	79200	65000
44.7	4276	1.8	21.94	B163	200LB6	80000	65000
43.7	4326	1.3	33.63	B153	180L4	50392	50392
42.9	4406	2.0	34.25	B163	180L4	80000	65000
42.0	4504	1.3	35.02	B153	180L4	50891	50891
41.1	4649	1.0	23.86	B153	200LB6	51092	51092
40.5	4711	1.6	24.17	B163	200LB6	80000	65000
39.0	4845	1.8	37.66	B163	180L4	80000	65000
38.9	4908	1.0	25.19	B153	200LB6	51758	51758
37.9	4992	1.2	38.81	B153	180L4	52159	52159
36.9	5179	1.5	26.58	B163	200LB6	80000	65000
36.2	5229	1.8	40.65	B163	180L4	80000	65000
34.8	5441	1.1	42.30	B153	180L4	53215	53215
34.7	5502	1.1	28.23	B153	200LB6	53149	53149
34.0	5612	1.3	28.80	B163	200LB6	80000	65000
32.6	5800	1.5	45.09	B163	180L4	80000	65000
31.7	6026	1.4	30.92	B163	200LB6	80000	65000
29.1	6504	1.1	50.56	B153	180L4	55368	55368
28.8	6560	1.7	51.00	B163	180L4	80000	65000
28.6	6675	1.3	34.25	B163	200LB6	80000	65000
27.4	6898	1.6	53.63	B163	180L4	80000	65000
26.0	7339	1.2	37.66	B163	200LB6	80000	65000
24.9	7585	1.5	58.97	B163	180L4	80000	65000
24.1	7922	1.2	40.65	B163	200LB6	80000	65000
21.1	8975	1.2	69.78	B163	180L4	80000	65000
19.2	9939	1.1	51.00	B163	200LB6	80000	65000
19.2	9868	1.1	76.72	B163	180L4	80000	65000
18.3	10451	1.1	53.63	B163	200LB6	80000	65000

30.00 kW

n2 [rpm]	M2 [Nm]	fs	i	Gear reducer	Motor	Fr2 D-S-P [N]	Fr2 C [N]
140.6	1834	1.3	10.49	B153	200L4	35897	35897
124.3	2075	2.1	11.87	B163	200L4	59114	59114
116.7	2210	1.2	12.64	B153	200L4	37793	37793
115.2	2239	1.8	12.81	B163	200L4	60424	60424
105.3	2449	1.2	14.01	B153	200L4	38858	38858
104.7	2462	1.8	14.08	B163	200L4	62080	62080
95.8	2692	1.3	15.40	B153	200L4	39847	39847

5.1 B/BA GEARED MOTORS (50Hz)

30.00 kW

n2 [rpm]	M2 [Nm]	fs	i	Gear reducer	Motor	Fr2 D-S-P [N]	Fr2 C [N]
95.0	2713	1.8	15.52	B163	200L4	63806	63806
90.0	2864	2.0	16.39	B163	200L4	64778	64778
81.9	3149	1.9	18.02	B163	200L4	66499	65000
79.5	3244	1.3	18.56	B153	200L4	41817	41817
73.9	3489	1.9	19.96	B163	200L4	68378	65000
71.7	3595	1.2	20.56	B153	200L4	42908	42908
67.2	3836	1.5	21.94	B163	200L4	70141	65000
61.8	4171	1.1	23.86	B153	200L4	44485	44485
61.0	4226	1.7	24.17	B163	200L4	71953	65000
58.6	4403	1.1	25.19	B153	200L4	45057	45057
55.5	4646	1.6	26.58	B163	200L4	73741	65000
52.2	4935	1.2	28.23	B153	200L4	46253	46253
51.2	5035	1.5	28.80	B163	200L4	75261	65000
48.6	5305	1.1	30.35	B153	200L4	47002	47002
47.7	5406	1.5	30.92	B163	200L4	76609	65000
43.1	5988	1.4	34.25	B163	200L4	78546	65000
39.2	6584	1.4	37.66	B163	200L4	80000	65000
36.3	7107	1.3	40.65	B163	200L4	80000	65000
32.7	7883	1.1	45.09	B163	200L4	80000	65000
28.9	8915	1.2	51.00	B163	200L4	80000	65000
27.5	9375	1.2	53.63	B163	200L4	80000	65000
25.0	10308	1.1	58.97	B163	200L4	80000	65000

37.00 kW

n2 [rpm]	M2 [Nm]	fs	i	Gear reducer	Motor	Fr2 D-S-P [N]	Fr2 C [N]
167.0	1904	1.3	8.89	B163	225S4	53581	53581
141.5	2247	1.1	10.49	B153	225S4	35205	35205
140.4	2265	1.3	10.58	B163	225S4	56303	56303
125.1	2542	1.7	11.87	B163	225S4	58158	58158
115.9	2743	1.5	12.81	B163	225S4	59400	59400
105.4	3016	1.4	14.08	B163	225S4	60964	60964
96.4	3298	1.1	15.40	B153	225S4	38861	38861
95.7	3324	1.5	15.52	B163	225S4	62586	62586
90.6	3509	1.6	16.39	B163	225S4	63497	63497
82.4	3858	1.5	18.02	B163	225S4	65101	65000
80.0	3974	1.0	18.56	B153	225S4	40642	40642
74.4	4274	1.5	19.96	B163	225S4	66841	65000
67.7	4699	1.2	21.94	B163	225S4	68462	65000
61.4	5177	1.4	24.17	B163	225S4	70115	65000
55.9	5692	1.3	26.58	B163	225S4	71732	65000
51.6	6168	1.2	28.80	B163	225S4	73094	65000
48.0	6622	1.3	30.92	B163	225S4	74292	65000
43.4	7335	1.2	34.25	B163	225S4	75993	65000

5.1 B/BA GEARED MOTORS (50Hz)

37.00 kW

n2 [rpm]	M2 [Nm]	fs	i	Gear reducer	Motor	Fr2 D-S-P [N]	Fr2 C [N]
39.4	8065	1.1	37.66	B163	225S4	77542	65000
36.5	8706	1.1	40.65	B163	225S4	78763	65000
29.1	10922	1.0	51.00	B163	225S4	80000	65000

45.00 kW

n2 [rpm]	M2 [Nm]	fs	i	Gear reducer	Motor	Fr2 D-S-P [N]	Fr2 C [N]
167.0	2316	1.1	8.89	B163	225M4	52862	52862
140.4	2754	1.0	10.58	B163	225M4	55447	55447
125.1	3091	1.4	11.87	B163	225M4	57198	57198
115.9	3336	1.2	12.81	B163	225M4	58364	58364
105.4	3668	1.2	14.08	B163	225M4	59825	59825
95.7	4043	1.2	15.52	B163	225M4	61331	61331
90.6	4268	1.3	16.39	B163	225M4	62171	62171
82.4	4692	1.3	18.02	B163	225M4	63643	63643
74.4	5198	1.3	19.96	B163	225M4	65226	65000
67.7	5715	1.0	21.94	B163	225M4	66687	65000
61.4	6296	1.2	24.17	B163	225M4	68160	65000
55.9	6922	1.1	26.58	B163	225M4	69582	65000
48.0	8054	1.0	30.92	B163	225M4	71790	65000

55.00 kW

n2 [rpm]	M2 [Nm]	fs	i	Gear reducer	Motor	Fr2 D-S-P [N]	Fr2 C [N]
125.1	3778	1.1	11.87	B163	250M4	55998	55998
95.7	4941	1.0	15.52	B163	250M4	59761	59761
90.6	5216	1.1	16.39	B163	250M4	60514	60514
82.4	5735	1.0	18.02	B163	250M4	61821	61821
74.4	6353	1.0	19.96	B163	250M4	63208	63208

5.2 IB/IBA GEAR REDUCER - 1750 RPM

IBA42

Mn_2 [Nm]	i	Pn_1 [kW]	n2 [rpm]	Fr1 [N]	Fr2 D-S-P [N]	Fr2 C [N]
77	7.62	1.95	229.8	373	-	1684
77	10.62	1.40	164.7	355	-	1882
77	12.95	1.15	135.2	406	-	2010
77	14.46	1.03	121.0	443	-	2085
102	16.47	1.19	106.2	579	-	2178
103	22.97	0.86	76.2	355	-	2433
102	28.00	0.70	62.5	406	-	2599
102	31.27	0.63	56.0	443	-	2697
103	33.78	0.59	51.8	458	-	2767
102	47.12	0.42	37.1	355	-	3092
102	57.43	0.34	30.5	406	-	3303
92	64.13	0.28	27.3	406	-	3426
95	78.17	0.23	22.4	406	-	3660

IBA52

Mn_2 [Nm]	i	Pn_1 [kW]	n2 [rpm]	Fr1 [N]	Fr2 D-S-P [N]	Fr2 C [N]
137	7.91	3.34	221.2	373	-	1828
137	9.46	2.79	185.0	414	-	1940
136	11.57	2.27	151.2	405	-	2075
137	14.63	1.81	119.7	392	-	2243
171	17.11	1.93	102.3	529	-	2363
171	20.46	1.61	85.5	414	-	2508
170	25.03	1.31	69.9	405	-	2683
172	31.63	1.05	55.3	392	-	2900
171	35.10	0.94	49.9	446	-	3003
172	41.97	0.79	41.7	414	-	3187
188	51.34	0.71	34.1	445	-	3409
172	64.87	0.51	27.0	356	-	3685
171	79.07	0.42	22.1	406	-	3936

IBA53

Mn_2 [Nm]	i	Pn_1 [kW]	n2 [rpm]	Fr1 [N]	Fr2 D-S-P [N]	Fr2 C [N]
189	73.70	0.52	23.7	472	-	3845
186	93.33	0.41	18.8	472	-	4000
187	111.61	0.34	15.7	472	-	4000
186	136.53	0.28	12.8	472	-	4000
190	172.53	0.22	10.1	472	-	4000
186	197.11	0.19	8.9	472	-	4000
183	249.08	0.15	7.0	472	-	4000
185	271.16	0.14	6.5	472	-	4000
180	342.65	0.11	5.1	472	-	4000

5.2 IB/IBA GEAR REDUCER - 1750 RPM

IBA72

Mn_2 [Nm]	i	Pn_1 [kW]	n2 [rpm]	Fr1 [N]	Fr2 D-S-P [N]	Fr2 C [N]
298	8.36	6.88	209.4	664	4715	2357
298	10.06	5.71	174.0	685	5016	2508
298	12.44	4.62	140.6	667	5384	2692
358	14.91	4.63	117.4	826	5718	2859
358	17.94	3.85	97.5	685	6083	3041
358	22.19	3.11	78.8	667	6529	3265
358	27.45	2.52	63.8	667	7009	3504
358	33.04	2.09	53.0	685	7456	3728
340	40.87	1.60	42.8	635	8003	4002
298	45.64	1.26	38.3	646	8303	4152
298	54.94	1.05	31.9	685	8833	4416
296	67.96	0.84	25.8	667	9481	4741

IBA73

Mn_2 [Nm]	i	Pn_1 [kW]	n2 [rpm]	Fr1 [N]	Fr2 D-S-P [N]	Fr2 C [N]
384	43.89	1.78	39.9	330	8196	4098
384	52.83	1.48	33.1	411	8718	4359
382	65.35	1.19	26.8	400	9358	4679
384	80.83	0.97	21.6	400	10000	5023
382	97.29	0.80	18.0	411	10000	5343
384	120.34	0.65	14.5	400	10000	5500
384	149.73	0.52	11.7	398	10000	5500
386	180.23	0.44	9.7	411	10000	5500
384	222.93	0.35	7.8	400	10000	5500
382	260.20	0.30	6.7	424	10000	5500
388	321.85	0.25	5.4	400	10000	5500
374	357.95	0.21	4.9	445	10000	5500
394	442.76	0.18	4.0	400	10000	5500

IB063

Mn_2 [Nm]	i	Pn_1 [kW]	n2 [rpm]	Fr1 [N]	Fr2 D-S-P [N]	Fr2 C [N]
191	5.71	6.80	306.2	367	6520	1863
243	6.88	7.20	254.4	388	6797	1942
252	7.32	7.01	239.0	415	6927	1979
256	9.16	5.70	191.0	375	7105	2030
277	10.26	5.50	170.5	368	7197	2056
325	11.03	6.00	158.7	395	7337	2096
334	12.35	5.50	141.7	428	7536	2153
362	13.15	5.60	133.1	462	7702	2200
426	15.18	5.72	115.3	559	8195	2341
432	17.00	5.17	102.9	618	8562	2446

5.2 IB/IBA GEAR REDUCER - 1750 RPM

IB063

Mn_2 [Nm]	i	Pn_1 [kW]	n2 [rpm]	Fr1 [N]	Fr2 D-S-P [N]	Fr2 C [N]
432	22.39	3.93	78.2	756	9618	2748
432	26.09	3.37	67.1	817	10248	2928
432	28.03	3.14	62.4	843	10554	3016
432	33.43	2.63	52.3	899	11338	3240
432	38.58	2.28	45.4	938	12000	3431
432	43.22	2.04	40.5	965	12000	3590
510	50.81	2.04	34.4	999	12000	3827
510	56.93	1.82	30.7	1020	12000	4001
510	69.16	1.50	25.3	1050	12000	4315
510	77.48	1.34	22.6	1065	12000	4508
510	90.33	1.15	19.4	1083	12000	4779
510	101.20	1.03	17.3	1095	12000	4990
510	111.74	0.93	15.7	1104	12000	5180
510	124.20	0.84	14.1	1113	12000	5390
510	139.15	0.75	12.6	1121	12000	5623
510	157.42	0.66	11.1	1129	12000	5887

IB083

Mn_2 [Nm]	i	Pn_1 [kW]	n2 [rpm]	Fr1 [N]	Fr2 D-S-P [N]	Fr2 C [N]
330	7.81	8.60	224.1	1764	11107	3173
347	8.62	8.20	202.9	1657	11159	3188
468	10.49	9.08	166.8	1804	11869	3391
489	11.59	8.60	151.0	1750	11965	3419
524	14.43	7.40	121.3	1916	12849	3671
610	16.60	7.48	105.5	2011	13450	3843
610	18.32	6.78	95.5	2104	14004	4001
610	22.82	5.44	76.7	2281	15298	4371
610	26.71	4.65	65.5	2386	16288	4654
610	29.50	4.21	59.3	2444	16936	4839
610	31.80	3.91	55.0	2484	17443	4984
610	34.49	3.60	50.7	2500	18000	5144
610	39.60	3.14	44.2	2500	18000	5427
610	42.95	2.89	40.7	2500	18000	5600
610	45.44	2.73	38.5	2500	18000	5722
725	51.19	2.88	34.2	2500	18000	5989
725	55.52	2.66	31.5	2500	18000	6177
725	59.96	2.46	29.2	2500	18000	6359
725	63.74	2.32	27.4	2500	18000	6507
725	69.14	2.13	25.3	2500	18000	6710
725	73.14	2.02	23.9	2500	18000	6853
725	80.76	1.83	21.7	2500	18000	7111
725	92.19	1.60	19.0	2500	18000	7470
725	100.57	1.47	17.4	2500	18000	7714

5.2 IB/IBA GEAR REDUCER - 1750 RPM

IB083

Mn_2 [Nm]	i	Pn_1 [kW]	n2 [rpm]	Fr1 [N]	Fr2 D-S-P [N]	Fr2 C [N]
725	105.29	1.40	16.6	2500	18000	7846
725	116.25	1.27	15.1	2500	18000	8137
725	126.76	1.16	13.8	2500	18000	8400
725	144.77	1.02	12.1	2500	18000	8818

IB103

Mn_2 [Nm]	i	Pn_1 [kW]	n2 [rpm]	Fr1 [N]	Fr2 D-S-P [N]	Fr2 C [N]
1001	17.27	11.80	101.3	1508	16670	4763
1010	19.06	10.79	91.8	1646	17345	4956
1010	23.70	8.68	73.8	1907	18922	5406
1080	26.51	8.29	66.0	1953	19508	5574
1155	30.55	7.70	57.3	2029	20367	5819
1225	33.07	7.54	52.9	2047	20749	5928
1225	35.87	6.95	48.8	2120	21439	6125
1225	41.12	6.07	42.5	2230	22000	6469
1225	44.61	5.59	39.2	2288	22000	6680
1225	47.28	5.27	37.0	2327	22000	6835
1450	50.24	5.88	34.8	2366	22000	7000
1450	53.02	5.57	33.0	2398	22000	7149
1450	58.50	5.05	29.9	2453	22000	7429
1450	64.89	4.55	27.0	2505	22000	7732
1450	68.58	4.31	25.5	2530	22000	7899
1450	72.76	4.06	24.1	2556	22000	8081
1450	78.92	3.74	22.2	2589	22000	8336
1535	83.66	3.74	20.9	2590	22000	8446
1535	92.31	3.39	19.0	2626	22000	8771
1535	105.44	2.96	16.6	2671	22000	9227
1535	114.80	2.72	15.2	2696	22000	9529
1535	120.42	2.60	14.5	2709	22000	9703
1535	132.87	2.35	13.2	2735	22000	10069
1535	144.69	2.16	12.1	2755	22000	10396
1535	165.25	1.89	10.6	2783	22000	10924

IB123

Mn_2 [Nm]	i	Pn_1 [kW]	n2 [rpm]	Fr1 [N]	Fr2 D-S-P [N]	Fr2 C [N]
696	7.97	17.80	219.7	2647	16004	4572
784	9.62	16.60	181.9	2656	16152	4615
1010	10.33	19.90	169.3	2610	15860	4531
1097	12.48	17.90	140.2	2849	17434	4981
1163	13.84	17.10	126.4	2910	17910	5117
1511	15.38	20.00	113.8	3019	18865	5390

5.2 IB/IBA GEAR REDUCER - 1750 RPM

IB123

Mn_2 [Nm]	i	Pn_1 [kW]	n2 [rpm]	Fr1 [N]	Fr2 D-S-P [N]	Fr2 C [N]
1590	18.58	17.43	94.2	3150	20227	5779
1751	20.61	17.30	84.9	3129	19967	5705
1824	22.78	16.30	76.8	3117	19706	5630
2020	25.89	15.89	67.6	3223	21077	6022
2020	27.51	14.95	63.6	3269	21748	6214
2020	30.79	13.36	56.8	3347	23031	6580
2020	31.26	13.16	56.0	3357	23207	6631
2020	34.68	11.86	50.5	3421	24438	6982
2020	40.53	10.15	43.2	3504	26365	7533
2165	44.89	9.82	39.0	3521	26820	7663
2310	49.80	9.44	35.1	3539	27343	7812
2730	54.30	10.24	32.2	3577	28534	8153
2730	59.36	9.36	29.5	3613	29797	8514
2820	62.59	9.17	28.0	3622	30000	8610
2815	69.43	8.25	25.2	3659	30000	9052
2990	74.42	8.18	23.5	3663	30000	9109
2990	80.04	7.61	21.9	3687	30000	9436
2990	89.87	6.77	19.5	3721	30000	9971
2990	99.70	6.11	17.6	3749	30000	10470
2990	106.65	5.71	16.4	3765	30000	10802
2990	119.60	5.09	14.6	3791	30000	11385
2990	129.96	4.68	13.5	3808	30000	11822
2990	144.43	4.22	12.1	3827	30000	12394
2990	160.23	3.80	10.9	3844	30000	12976
2990	180.40	3.37	9.7	3862	30000	13667

IB143

Mn_2 [Nm]	i	Pn_1 [kW]	n2 [rpm]	Fr1 [N]	Fr2 D-S-P [N]	Fr2 C [N]
1411	10.84	26.50	161.4	2401	14322	14322
1457	11.87	25.00	147.5	2491	14730	14730
1579	14.49	22.20	120.8	2764	16364	16364
2276	17.04	27.20	102.7	2916	17477	17477
2346	18.66	25.60	93.8	2886	17100	17100
2186	21.00	21.20	83.3	2900	17009	17009
2628	22.77	23.50	76.8	2885	16597	16597
2429	25.63	19.30	68.3	2964	17182	17182
3325	27.44	24.67	63.8	3033	17889	17889
3395	30.05	23.01	58.2	3098	18551	18551
3395	33.01	20.94	53.0	3179	19580	19580
3470	36.67	19.27	47.7	3245	20470	20470
3470	40.29	17.54	43.4	3313	21570	21570
3470	44.16	16.00	39.6	3374	22675	22675
3615	48.35	15.22	36.2	3404	23201	23201

5.2 IB/IBA GEAR REDUCER - 1750 RPM

IB143

Mn_2 [Nm]	i	Pn_1 [kW]	n2 [rpm]	Fr1 [N]	Fr2 D-S-P [N]	Fr2 C [N]
4270	53.16	16.36	32.9	3458	24414	24414
4270	54.63	15.92	32.0	3473	24770	24770
4270	59.02	14.73	29.6	3512	25798	25798
4270	64.88	13.40	27.0	3557	27093	27093
4270	70.43	12.34	24.9	3592	28249	28249
4270	77.12	11.27	22.7	3627	29562	29562
4270	85.54	10.16	20.5	3664	31114	31114
4270	94.13	9.24	18.6	3695	32591	32591
4270	105.83	8.22	16.5	3729	34468	34468
4270	111.94	7.77	15.6	3744	35392	35392
4270	124.62	6.98	14.0	3770	37208	37208
4270	136.44	6.37	12.8	3790	38793	38793
4270	149.59	5.81	11.7	3809	40000	40000
4270	166.53	5.22	10.5	3829	40000	40000
4270	187.24	4.64	9.3	3848	40000	40000

IB153

Mn_2 [Nm]	i	Pn_1 [kW]	n2 [rpm]	Fr1 [N]	Fr2 D-S-P [N]	Fr2 C [N]
2072	10.49	40.20	166.8	7203	30265	30265
2272	12.64	36.60	138.4	7657	32579	32579
2395	14.01	34.80	124.9	7651	33227	33227
3177	15.40	42.00	113.6	7852	34499	34499
3454	18.56	37.90	94.3	7860	35747	35747
3606	20.56	35.70	85.1	7905	36575	36575
3738	23.86	31.90	73.3	8125	38588	38588
4886	25.19	39.50	69.5	8193	39314	39314
4811	28.23	34.70	62.0	8109	39527	39527
5351	30.35	35.90	57.7	8232	40748	40748
5650	33.63	34.20	52.0	8393	42534	42534
5572	35.02	32.40	50.0	8451	43252	43252
5785	38.81	30.35	45.1	8590	45125	45125
5785	42.30	27.85	41.4	8696	46743	46743
5780	47.53	24.76	36.8	8826	49012	49012
6835	50.56	27.52	34.6	8889	50248	50248
6835	54.64	25.47	32.0	8963	51837	51837
6835	57.27	24.30	30.6	9005	52821	52821
6835	60.92	22.84	28.7	9057	54136	54136
6835	63.47	21.93	27.6	9090	55024	55024
6835	71.15	19.56	24.6	9174	57559	57559
6835	77.22	18.02	22.7	9229	59440	59440
6835	83.89	16.59	20.9	9281	61391	61391
6835	87.65	15.88	20.0	9306	62448	62448
6835	93.05	14.96	18.8	9339	63911	63911

5.2 IB/IBA GEAR REDUCER - 1750 RPM

IB153

Mn_2 [Nm]	i	Pn_1 [kW]	n2 [rpm]	Fr1 [N]	Fr2 D-S-P [N]	Fr2 C [N]
6835	103.12	13.50	17.0	9392	65000	65000
6835	123.88	11.23	14.1	9473	65000	65000
6835	134.27	10.36	13.0	9504	65000	65000
6835	149.26	9.32	11.7	9541	65000	65000
6835	165.42	8.41	10.6	9574	65000	65000

IB163

Mn_2 [Nm]	i	Pn_1 [kW]	n2 [rpm]	Fr1 [N]	Fr2 D-S-P [N]	Fr2 C [N]
2114	8.89	48.40	196.8	7268	42738	42738
2441	10.58	47.00	165.5	7338	44107	44107
3626	11.87	62.20	147.4	7730	46651	46651
3460	12.81	55.00	136.6	7578	46354	46354
3680	14.08	53.20	124.3	7599	46974	46974
4208	15.52	55.20	112.8	7748	48363	48363
4780	16.39	59.40	106.8	7908	49696	49696
4982	18.02	56.30	97.1	8015	50972	50972
5587	19.96	57.00	87.7	8179	52815	52815
4915	21.94	45.60	79.8	8428	55548	55548
6173	24.17	52.00	72.4	8585	57740	57740
6423	26.58	49.20	65.8	8652	59139	59139
7375	28.80	52.14	60.8	8905	62694	62694
7822	30.92	51.50	56.6	8835	62446	62446
8600	34.25	51.12	51.1	8932	64581	64581
8890	37.66	48.06	46.5	9015	66599	65000
9180	40.65	45.98	43.0	9072	68159	65000
8675	45.09	39.17	38.8	9256	72405	65000
11110	51.00	44.35	34.3	9301	74583	65000
11110	53.63	42.18	32.6	9351	76188	65000
11110	58.97	38.36	29.7	9439	79289	65000
11110	69.78	32.42	25.1	9575	80000	65000
11110	76.72	29.49	22.8	9642	80000	65000
11110	87.54	25.84	20.0	9726	80000	65000
11110	96.25	23.50	18.2	9779	80000	65000
11110	103.93	21.77	16.8	9819	80000	65000
11110	114.27	19.80	15.3	9864	80000	65000
11110	126.29	17.91	13.9	9907	80000	65000
11110	138.85	16.29	12.6	9944	80000	65000
11110	154.83	14.61	11.3	9983	80000	65000

5.3 IB/IBA GEAR REDUCER - 1400 RPM

IBA42

Mn_2 [Nm]	i	Pn_1 [kW]	n2 [rpm]	Fr1 [N]	Fr2 D-S-P [N]	Fr2 C [N]
77	7.62	1.56	183.8	373	-	1814
77	10.62	1.12	131.8	355	-	2027
77	12.95	0.92	108.1	406	-	2165
77	14.46	0.82	96.8	443	-	2246
102	16.47	0.96	85.0	579	-	2346
103	22.97	0.69	60.9	355	-	2621
102	28.00	0.56	50.0	406	-	2800
102	31.27	0.50	44.8	443	-	2905
103	33.78	0.47	41.4	458	-	2981
102	47.12	0.33	29.7	355	-	3331
102	57.43	0.27	24.4	406	-	3558
92	64.13	0.22	21.8	406	-	3691
95	78.17	0.19	17.9	406	-	3943

IBA52

Mn_2 [Nm]	i	Pn_1 [kW]	n2 [rpm]	Fr1 [N]	Fr2 D-S-P [N]	Fr2 C [N]
137	7.91	2.67	176.9	373	-	1969
137	9.46	2.23	148.0	414	-	2090
136	11.57	1.81	121.0	405	-	2235
137	14.63	1.45	95.7	392	-	2416
171	17.11	1.54	81.8	529	-	2546
171	20.46	1.29	68.4	414	-	2702
170	25.03	1.05	55.9	405	-	2890
172	31.63	0.84	44.3	392	-	3124
171	35.10	0.75	39.9	446	-	3235
172	41.97	0.63	33.4	414	-	3433
188	51.34	0.57	27.3	445	-	3672
172	64.87	0.41	21.6	356	-	3970
171	79.07	0.33	17.7	406	-	4000

IBA53

Mn_2 [Nm]	i	Pn_1 [kW]	n2 [rpm]	Fr1 [N]	Fr2 D-S-P [N]	Fr2 C [N]
189	73.70	0.42	19.0	472	-	4000
186	93.33	0.32	15.0	472	-	4000
187	111.61	0.27	12.5	472	-	4000
186	136.53	0.22	10.2	472	-	4000
190	172.53	0.18	8.1	472	-	4000
186	197.11	0.15	7.1	472	-	4000
183	249.08	0.12	5.6	472	-	4000
185	271.16	0.11	5.2	472	-	4000
180	342.65	0.09	4.1	472	-	4000

5.3 IB/IBA GEAR REDUCER - 1400 RPM

IBA72

Mn_2 [Nm]	i	Pn_1 [kW]	n2 [rpm]	Fr1 [N]	Fr2 D-S-P [N]	Fr2 C [N]
298	8.36	5.50	167.5	664	5079	2540
298	10.06	4.57	139.2	685	5403	2701
298	12.44	3.70	112.5	667	5800	2900
358	14.91	3.71	93.9	826	6160	3080
358	17.94	3.08	78.0	685	6552	3276
358	22.19	2.49	63.1	667	7033	3517
358	27.45	2.01	51.0	667	7550	3775
358	33.04	1.67	42.4	685	8031	4016
340	40.87	1.28	34.2	635	8621	4311
298	45.64	1.01	30.7	646	8944	4472
298	54.94	0.84	25.5	685	9515	4757
296	67.96	0.67	20.6	667	10000	5107

IBA73

Mn_2 [Nm]	i	Pn_1 [kW]	n2 [rpm]	Fr1 [N]	Fr2 D-S-P [N]	Fr2 C [N]
384	43.89	1.43	31.9	330	8828	4414
384	52.83	1.18	26.5	411	9391	4696
382	65.35	0.95	21.4	400	10000	5041
384	80.83	0.77	17.3	400	10000	5411
382	97.29	0.64	14.4	411	10000	5500
384	120.34	0.52	11.6	400	10000	5500
384	149.73	0.42	9.3	398	10000	5500
386	180.23	0.35	7.8	411	10000	5500
384	222.93	0.28	6.3	400	10000	5500
382	260.20	0.24	5.4	424	10000	5500
388	321.85	0.20	4.3	400	10000	5500
374	357.95	0.17	3.9	445	10000	5500
394	442.76	0.14	3.2	400	10000	5500

IB063

Mn_2 [Nm]	i	Pn_1 [kW]	n2 [rpm]	Fr1 [N]	Fr2 D-S-P [N]	Fr2 C [N]
208	5.71	5.93	245.0	314	7034	2010
244	6.88	5.78	203.5	337	7335	2096
252	7.32	5.61	191.2	365	7475	2136
321	9.16	5.70	152.8	323	7673	2192
347	10.26	5.50	136.4	315	7774	2221
390	11.03	5.76	127.0	345	7927	2265
417	12.35	5.50	113.3	380	8142	2326
426	13.15	5.28	106.5	416	8322	2378
426	15.18	4.57	92.3	519	8853	2529
432	17.00	4.14	82.3	581	9248	2642

5.3 IB/IBA GEAR REDUCER - 1400 RPM

IB063

Mn_2 [Nm]	i	Pn_1 [kW]	n2 [rpm]	Fr1 [N]	Fr2 D-S-P [N]	Fr2 C [N]
432	22.39	3.14	62.5	728	10385	2967
432	26.09	2.70	53.7	794	11063	3161
432	28.03	2.51	49.9	821	11393	3255
432	33.43	2.10	41.9	881	12000	3496
432	38.58	1.82	36.3	922	12000	3703
432	43.22	1.63	32.4	951	12000	3874
510	50.81	1.63	27.6	987	12000	4129
510	56.93	1.46	24.6	1009	12000	4316
510	69.16	1.20	20.2	1041	12000	4654
510	77.48	1.07	18.1	1057	12000	4861
510	90.33	0.92	15.5	1076	12000	5154
510	101.20	0.82	13.8	1089	12000	5380
510	111.74	0.74	12.5	1098	12000	5585
510	124.20	0.67	11.3	1108	12000	5811
510	139.15	0.60	10.1	1116	12000	6062
510	157.42	0.53	8.9	1125	12000	6346

IB083

Mn_2 [Nm]	i	Pn_1 [kW]	n2 [rpm]	Fr1 [N]	Fr2 D-S-P [N]	Fr2 C [N]
360	7.81	7.51	179.3	1685	11980	3423
432	8.62	8.16	162.4	1571	12040	3440
468	10.49	7.26	133.4	1728	12807	3659
540	11.59	7.59	120.8	1671	12915	3690
585	14.43	6.60	97.0	1847	13870	3963
610	16.60	5.99	84.4	1948	14518	4148
610	18.32	5.42	76.4	2047	15115	4319
610	22.82	4.35	61.4	2235	16508	4717
610	26.71	3.72	52.4	2346	17573	5021
610	29.50	3.37	47.5	2408	18000	5220
610	31.80	3.12	44.0	2451	18000	5376
610	34.49	2.88	40.6	2494	18000	5549
610	39.60	2.51	35.4	2500	18000	5853
610	42.95	2.31	32.6	2500	18000	6039
610	45.44	2.19	30.8	2500	18000	6171
725	51.19	2.31	27.4	2500	18000	6458
725	55.52	2.13	25.2	2500	18000	6660
725	59.96	1.97	23.4	2500	18000	6856
725	63.74	1.85	22.0	2500	18000	7016
725	69.14	1.71	20.2	2500	18000	7234
725	73.14	1.61	19.1	2500	18000	7388
725	80.76	1.46	17.3	2500	18000	7666
725	92.19	1.28	15.2	2500	18000	8052
725	100.57	1.17	13.9	2500	18000	8315

5.3 IB/IBA GEAR REDUCER - 1400 RPM

IB083

Mn_2 [Nm]	i	Pn_1 [kW]	n2 [rpm]	Fr1 [N]	Fr2 D-S-P [N]	Fr2 C [N]
725	105.29	1.12	13.3	2500	18000	8457
725	116.25	1.02	12.0	2500	18000	8771
725	126.76	0.93	11.0	2500	18000	9053
725	144.77	0.82	9.7	2500	18000	9503

IB103

Mn_2 [Nm]	i	Pn_1 [kW]	n2 [rpm]	Fr1 [N]	Fr2 D-S-P [N]	Fr2 C [N]
1010	17.27	9.53	81.1	1414	17992	5141
1010	19.06	8.63	73.5	1561	18718	5348
1010	23.70	6.94	59.1	1839	20415	5833
1080	26.51	6.64	52.8	1887	21050	6014
1155	30.55	6.16	45.8	1969	21978	6279
1225	33.07	6.03	42.3	1987	22000	6398
1225	35.87	5.56	39.0	2065	22000	6610
1225	41.12	4.85	34.0	2182	22000	6979
1225	44.61	4.47	31.4	2244	22000	7207
1225	47.28	4.22	29.6	2286	22000	7374
1450	50.24	4.70	27.9	2327	22000	7552
1450	53.02	4.45	26.4	2361	22000	7712
1450	58.50	4.04	23.9	2419	22000	8013
1450	64.89	3.64	21.6	2474	22000	8340
1450	68.58	3.44	20.4	2502	22000	8519
1450	72.76	3.25	19.2	2529	22000	8715
1450	78.92	2.99	17.7	2564	22000	8990
1535	83.66	2.99	16.7	2565	22000	9109
1535	92.31	2.71	15.2	2604	22000	9459
1535	105.44	2.37	13.3	2651	22000	9950
1535	114.80	2.18	12.2	2678	22000	10275
1535	120.42	2.08	11.6	2692	22000	10462
1535	132.87	1.88	10.5	2719	22000	10856
1535	144.69	1.73	9.7	2740	22000	11208
1535	165.25	1.51	8.5	2770	22000	11776

IB123

Mn_2 [Nm]	i	Pn_1 [kW]	n2 [rpm]	Fr1 [N]	Fr2 D-S-P [N]	Fr2 C [N]
871	7.97	17.80	175.8	2561	17308	4945
980	9.62	16.60	145.5	2570	17484	4995
1263	10.33	19.90	135.5	2521	17181	4909
1371	12.48	17.90	112.2	2775	18875	5393
1453	13.84	17.10	101.1	2841	19393	5541
1515	15.38	16.04	91.0	2957	20420	5834

5.3 IB/IBA GEAR REDUCER - 1400 RPM

IB123

Mn_2 [Nm]	i	Pn_1 [kW]	n2 [rpm]	Fr1 [N]	Fr2 D-S-P [N]	Fr2 C [N]
1590	18.58	13.94	75.4	3095	21892	6255
1805	20.61	14.27	67.9	3073	21629	6180
2020	22.78	14.44	61.5	3061	21364	6104
2020	25.89	12.71	54.1	3174	22840	6526
2020	27.51	11.96	50.9	3223	23562	6732
2020	30.79	10.69	45.5	3306	24944	7127
2020	31.26	10.52	44.8	3316	25133	7181
2020	34.68	9.49	40.4	3384	26458	7559
2020	40.53	8.12	34.5	3473	28532	8152
2165	44.89	7.86	31.2	3490	29033	8295
2310	49.80	7.56	28.1	3510	29606	8459
2730	54.30	8.19	25.8	3550	30000	8825
2730	59.36	7.49	23.6	3589	30000	9214
2820	62.59	7.34	22.4	3598	30000	9319
2815	69.43	6.60	20.2	3638	30000	9795
2990	74.42	6.54	18.8	3641	30000	9859
2990	80.04	6.08	17.5	3667	30000	10211
2990	89.87	5.42	15.6	3703	30000	10788
2990	99.70	4.89	14.0	3733	30000	11324
2990	106.65	4.57	13.1	3750	30000	11682
2990	119.60	4.07	11.7	3777	30000	12309
2990	129.96	3.75	10.8	3795	30000	12780
2990	144.43	3.37	9.7	3816	30000	13395
2990	160.23	3.04	8.7	3834	30000	14022
2990	180.40	2.70	7.8	3853	30000	14766

IB143

Mn_2 [Nm]	i	Pn_1 [kW]	n2 [rpm]	Fr1 [N]	Fr2 D-S-P [N]	Fr2 C [N]
1763	10.84	26.50	129.2	2299	15530	15530
1821	11.87	25.00	118.0	2395	15973	15973
1974	14.49	22.20	96.7	2685	17731	17731
2310	17.04	22.08	82.2	2847	18933	18933
2600	18.66	22.70	75.0	2815	18542	18542
2733	21.00	21.20	66.7	2830	18460	18460
3180	22.77	22.75	61.5	2813	18031	18031
3036	25.63	19.30	54.6	2898	18668	18668
3325	27.44	19.74	51.0	2971	19429	19429
3395	30.05	18.41	46.6	3040	20146	20146
3395	33.01	16.75	42.4	3126	21254	21254
3470	36.67	15.41	38.2	3197	22216	22216
3470	40.29	14.03	34.8	3269	23399	23399
3470	44.16	12.80	31.7	3334	24589	24589
3615	48.35	12.18	28.9	3366	25162	25162

5.3 IB/IBA GEAR REDUCER - 1400 RPM

IB143

Mn_2 [Nm]	i	Pn_1 [kW]	n2 [rpm]	Fr1 [N]	Fr2 D-S-P [N]	Fr2 C [N]
4270	53.16	13.08	26.3	3424	26469	26469
4270	54.63	12.73	25.6	3439	26852	26852
4270	59.02	11.79	23.7	3481	27958	27958
4270	64.88	10.72	21.6	3528	29352	29352
4270	70.43	9.87	19.9	3566	30597	30597
4270	77.12	9.02	18.1	3603	32010	32010
4270	85.54	8.13	16.4	3643	33680	33680
4270	94.13	7.39	14.9	3675	35271	35271
4270	105.83	6.57	13.2	3712	37290	37290
4270	111.94	6.21	12.5	3728	38286	38286
4270	124.62	5.58	11.2	3755	40000	40000
4270	136.44	5.10	10.3	3777	40000	40000
4270	149.59	4.65	9.4	3797	40000	40000
4270	166.53	4.18	8.4	3818	40000	40000
4270	187.24	3.71	7.5	3838	40000	40000

IB153

Mn_2 [Nm]	i	Pn_1 [kW]	n2 [rpm]	Fr1 [N]	Fr2 D-S-P [N]	Fr2 C [N]
2590	10.49	40.20	133.4	7032	32656	32656
2841	12.64	36.60	110.7	7516	35147	35147
2993	14.01	34.80	99.9	7509	35853	35853
3615	15.40	38.24	90.9	7723	37222	37222
4317	18.56	37.90	75.5	7732	38582	38582
4507	20.56	35.70	68.1	7780	39483	39483
4672	23.86	31.90	58.7	8014	41653	41653
4915	25.19	31.79	55.6	8085	42436	42436
5780	28.23	33.35	49.6	7997	42686	42686
5780	30.35	31.02	46.1	8128	44001	44001
5780	33.63	27.99	41.6	8298	45923	45923
5785	35.02	26.91	40.0	8361	46696	46696
5785	38.81	24.28	36.1	8509	48712	48712
5785	42.30	22.28	33.1	8621	50453	50453
5780	47.53	19.81	29.4	8759	52896	52896
6835	50.56	22.02	27.7	8826	54227	54227
6835	54.64	20.38	25.6	8904	55937	55937
6835	57.27	19.44	24.4	8949	56996	56996
6835	60.92	18.27	23.0	9005	58412	58412
6835	63.47	17.54	22.1	9039	59367	59367
6835	71.15	15.65	19.7	9130	62097	62097
6835	77.22	14.42	18.1	9188	64121	64121
6835	83.89	13.27	16.7	9243	65000	65000
6835	87.65	12.70	16.0	9270	65000	65000
6835	93.05	11.97	15.1	9305	65000	65000

5.3 IB/IBA GEAR REDUCER - 1400 RPM

IB153

Mn_2 [Nm]	i	Pn_1 [kW]	n2 [rpm]	Fr1 [N]	Fr2 D-S-P [N]	Fr2 C [N]
6835	103.12	10.80	13.6	9361	65000	65000
6835	123.88	8.99	11.3	9447	65000	65000
6835	134.27	8.29	10.4	9480	65000	65000
6835	149.26	7.46	9.4	9520	65000	65000
6835	165.42	6.73	8.5	9554	65000	65000

IB163

Mn_2 [Nm]	i	Pn_1 [kW]	n2 [rpm]	Fr1 [N]	Fr2 D-S-P [N]	Fr2 C [N]
2642	8.89	48.40	157.4	7073	46145	46145
3052	10.58	47.00	132.4	7148	47640	47640
4533	11.87	62.20	118.0	7565	50376	50376
4325	12.81	55.00	109.3	7403	50078	50078
4600	14.08	53.20	99.4	7426	50762	50762
5260	15.52	55.20	90.2	7584	52265	52265
5975	16.39	59.40	85.4	7754	53698	53698
6227	18.02	56.30	77.7	7869	55082	55082
6984	19.96	57.00	70.2	8043	57072	57072
6143	21.94	45.60	63.8	8307	60008	60008
7590	24.17	51.14	57.9	8475	62369	62369
8025	26.58	49.18	52.7	8546	63887	63887
7375	28.80	41.71	48.6	8815	67696	65000
8315	30.92	43.80	45.3	8740	67456	65000
8600	34.25	40.90	40.9	8844	69762	65000
8890	37.66	38.45	37.2	8932	71943	65000
9180	40.65	36.78	34.4	8992	73630	65000
8675	45.09	31.34	31.1	9189	78186	65000
11110	51.00	35.48	27.4	9236	80000	65000
11110	53.63	33.74	26.1	9289	80000	65000
11110	58.97	30.69	23.7	9382	80000	65000
11110	69.78	25.94	20.1	9527	80000	65000
11110	76.72	23.59	18.2	9599	80000	65000
11110	87.54	20.67	16.0	9688	80000	65000
11110	96.25	18.80	14.6	9745	80000	65000
11110	103.93	17.41	13.5	9787	80000	65000
11110	114.27	15.84	12.2	9835	80000	65000
11110	126.29	14.33	11.1	9881	80000	65000
11110	138.85	13.03	10.1	9921	80000	65000
11110	154.83	11.69	9.0	9962	80000	65000

5.4 IB/IBA GEAR REDUCER - 1140 RPM

IBA42

Mn_2 [Nm]	i	Pn_1 [kW]	n2 [rpm]	Fr1 [N]	Fr2 D-S-P [N]	Fr2 C [N]
77	7.62	1.26	149.7	373	-	1943
77	10.62	0.90	107.3	355	-	2171
77	12.95	0.74	88.0	406	-	2319
77	14.46	0.66	78.8	443	-	2406
102	16.47	0.77	69.2	579	-	2512
103	22.97	0.56	49.6	355	-	2807
102	28.00	0.45	40.7	406	-	2998
102	31.27	0.41	36.5	443	-	3111
103	33.78	0.38	33.8	458	-	3192
102	47.12	0.27	24.2	355	-	3567
102	57.43	0.22	19.9	406	-	3810
92	64.13	0.18	17.8	406	-	3952
95	78.17	0.15	14.6	406	-	4000

IBA52

Mn_2 [Nm]	i	Pn_1 [kW]	n2 [rpm]	Fr1 [N]	Fr2 D-S-P [N]	Fr2 C [N]
137	7.91	2.15	144.1	373	-	2108
137	9.46	1.80	120.5	414	-	2238
136	11.57	1.46	98.5	405	-	2393
137	14.63	1.17	77.9	392	-	2587
171	17.11	1.24	66.6	529	-	2726
171	20.46	1.04	55.7	414	-	2894
170	25.03	0.84	45.5	405	-	3095
172	31.63	0.68	36.0	392	-	3346
171	35.10	0.61	32.5	446	-	3464
172	41.97	0.51	27.2	414	-	3677
188	51.34	0.46	22.2	445	-	3932
172	64.87	0.33	17.6	356	-	4000
171	79.07	0.27	14.4	406	-	4000

IBA53

Mn_2 [Nm]	i	Pn_1 [kW]	n2 [rpm]	Fr1 [N]	Fr2 D-S-P [N]	Fr2 C [N]
189	73.70	0.34	15.5	472	-	4000
186	93.33	0.26	12.2	472	-	4000
187	111.61	0.22	10.2	472	-	4000
186	136.53	0.18	8.3	472	-	4000
190	172.53	0.14	6.6	472	-	4000
186	197.11	0.12	5.8	472	-	4000
183	249.08	0.10	4.6	472	-	4000
185	271.16	0.09	4.2	472	-	4000
180	342.65	0.07	3.3	472	-	4000

5.4 IB/IBA GEAR REDUCER - 1140 RPM

IBA72

Mn_2 [Nm]	i	Pn_1 [kW]	n2 [rpm]	Fr1 [N]	Fr2 D-S-P [N]	Fr2 C [N]
298	8.36	4.44	136.4	664	5439	2720
298	10.06	3.69	113.3	685	5786	2893
298	12.44	2.98	91.6	667	6211	3105
358	14.91	2.99	76.5	826	6596	3298
358	17.94	2.48	63.5	685	7017	3508
358	22.19	2.01	51.4	667	7532	3766
358	27.45	1.62	41.5	667	8085	4043
358	33.04	1.35	34.5	685	8600	4300
340	40.87	1.03	27.9	635	9232	4616
298	45.64	0.81	25.0	646	9578	4789
298	54.94	0.67	20.8	685	10000	5095
296	67.96	0.54	16.8	667	10000	5469

IBA73

Mn_2 [Nm]	i	Pn_1 [kW]	n2 [rpm]	Fr1 [N]	Fr2 D-S-P [N]	Fr2 C [N]
384	43.89	1.15	26.0	330	9454	4727
384	52.83	0.95	21.6	411	10000	5028
382	65.35	0.77	17.4	400	10000	5398
384	80.83	0.62	14.1	400	10000	5500
382	97.29	0.52	11.7	411	10000	5500
384	120.34	0.42	9.5	400	10000	5500
384	149.73	0.34	7.6	398	10000	5500
386	180.23	0.28	6.3	411	10000	5500
384	222.93	0.23	5.1	400	10000	5500
382	260.20	0.19	4.4	424	10000	5500
388	321.85	0.16	3.5	400	10000	5500
374	357.95	0.14	3.2	445	10000	5500
394	442.76	0.12	2.6	400	10000	5500

IB063

Mn_2 [Nm]	i	Pn_1 [kW]	n2 [rpm]	Fr1 [N]	Fr2 D-S-P [N]	Fr2 C [N]
208	5.71	4.78	199.5	292	7587	2168
244	6.88	4.66	165.7	316	7919	2263
252	7.32	4.52	155.7	344	8070	2306
332	9.16	4.76	124.4	301	8305	2373
374	10.26	4.79	111.1	294	8426	2407
390	11.03	4.64	103.4	324	8593	2455
418	12.35	4.44	92.3	359	8832	2523
426	13.15	4.25	86.7	396	9025	2579
426	15.18	3.69	75.1	502	9594	2741
432	17.00	3.34	67.0	566	10019	2863

5.4 IB/IBA GEAR REDUCER - 1140 RPM

IB063

Mn_2 [Nm]	i	Pn_1 [kW]	n2 [rpm]	Fr1 [N]	Fr2 D-S-P [N]	Fr2 C [N]
432	22.39	2.53	50.9	716	11236	3210
432	26.09	2.17	43.7	784	11961	3417
432	28.03	2.02	40.7	812	12000	3518
432	33.43	1.70	34.1	873	12000	3776
432	38.58	1.47	29.6	915	12000	3997
432	43.22	1.31	26.4	945	12000	4181
510	50.81	1.32	22.4	982	12000	4453
510	56.93	1.18	20.0	1004	12000	4654
510	69.16	0.97	16.5	1037	12000	5015
510	77.48	0.86	14.7	1054	12000	5237
510	90.33	0.74	12.6	1073	12000	5550
510	101.20	0.66	11.3	1086	12000	5793
510	111.74	0.60	10.2	1096	12000	6012
510	124.20	0.54	9.2	1105	12000	6253
510	139.15	0.48	8.2	1115	12000	6522
510	157.42	0.43	7.2	1123	12000	6826

IB083

Mn_2 [Nm]	i	Pn_1 [kW]	n2 [rpm]	Fr1 [N]	Fr2 D-S-P [N]	Fr2 C [N]
360	7.81	6.05	146.0	1652	12911	3689
432	8.62	6.58	132.2	1535	12995	3713
468	10.49	5.86	108.6	1696	13824	3950
540	11.59	6.12	98.4	1638	13958	3988
585	14.43	5.32	79.0	1818	14991	4283
610	16.60	4.83	68.7	1922	15692	4483
610	18.32	4.37	62.2	2023	16331	4666
610	22.82	3.51	50.0	2216	17821	5092
610	26.71	3.00	42.7	2330	18000	5417
610	29.50	2.72	38.6	2393	18000	5631
610	31.80	2.52	35.9	2437	18000	5798
610	34.49	2.32	33.0	2481	18000	5983
610	39.60	2.02	28.8	2500	18000	6308
610	42.95	1.87	26.5	2500	18000	6507
610	45.44	1.76	25.1	2500	18000	6648
725	51.19	1.86	22.3	2500	18000	6955
725	55.52	1.71	20.5	2500	18000	7172
725	59.96	1.59	19.0	2500	18000	7382
725	63.74	1.49	17.9	2500	18000	7553
725	69.14	1.38	16.5	2500	18000	7786
725	73.14	1.30	15.6	2500	18000	7950
725	80.76	1.18	14.1	2500	18000	8248
725	92.19	1.03	12.4	2500	18000	8661
725	100.57	0.95	11.3	2500	18000	8943

5.4 IB/IBA GEAR REDUCER - 1140 RPM

IB083

Mn_2 [Nm]	i	Pn_1 [kW]	n2 [rpm]	Fr1 [N]	Fr2 D-S-P [N]	Fr2 C [N]
725	105.29	0.90	10.8	2500	18000	9095
725	116.25	0.82	9.8	2500	18000	9430
725	126.76	0.75	9.0	2500	18000	9733
725	144.77	0.66	7.9	2500	18000	10214

IB103

Mn_2 [Nm]	i	Pn_1 [kW]	n2 [rpm]	Fr1 [N]	Fr2 D-S-P [N]	Fr2 C [N]
1010	17.27	7.68	66.0	1375	19436	5553
1010	19.06	6.96	59.8	1525	20213	5775
1010	23.70	5.60	48.1	1810	22000	6294
1080	26.51	5.35	43.0	1860	22000	6492
1155	30.55	4.96	37.3	1943	22000	6779
1225	33.07	4.86	34.5	1962	22000	6910
1225	35.87	4.48	31.8	2042	22000	7137
1225	41.12	3.91	27.7	2162	22000	7532
1225	44.61	3.61	25.6	2226	22000	7776
1225	47.28	3.40	24.1	2268	22000	7955
1450	50.24	3.79	22.7	2310	22000	8144
1450	53.02	3.59	21.5	2345	22000	8316
1450	58.50	3.25	19.5	2405	22000	8638
1450	64.89	2.93	17.6	2462	22000	8988
1450	68.58	2.78	16.6	2490	22000	9180
1450	72.76	2.62	15.7	2518	22000	9389
1450	78.92	2.41	14.4	2554	22000	9683
1535	83.66	2.41	13.6	2554	22000	9815
1535	92.31	2.18	12.3	2594	22000	10189
1535	105.44	1.91	10.8	2642	22000	10714
1535	114.80	1.76	9.9	2670	22000	11062
1535	120.42	1.67	9.5	2685	22000	11262
1535	132.87	1.52	8.6	2712	22000	11684
1535	144.69	1.39	7.9	2734	22000	12061
1535	165.25	1.22	6.9	2765	22000	12669

IB123

Mn_2 [Nm]	i	Pn_1 [kW]	n2 [rpm]	Fr1 [N]	Fr2 D-S-P [N]	Fr2 C [N]
1080	7.97	17.80	143.1	2525	18833	5381
1216	9.62	16.60	118.5	2534	19084	5452
1445	10.33	18.36	110.3	2484	18801	5372
1445	12.48	15.21	91.3	2745	20614	5890
1515	13.84	14.37	82.3	2812	21189	6054
1515	15.38	12.93	74.1	2931	22289	6368

5.4 IB/IBA GEAR REDUCER - 1140 RPM

IB123

Mn_2 [Nm]	i	Pn_1 [kW]	n2 [rpm]	Fr1 [N]	Fr2 D-S-P [N]	Fr2 C [N]
1590	18.58	11.24	61.4	3073	23884	6824
1805	20.61	11.50	55.3	3050	23665	6761
2020	22.78	11.64	50.0	3037	23443	6698
2020	25.89	10.25	44.0	3153	25023	7149
2020	27.51	9.64	41.4	3203	25796	7370
2020	30.79	8.61	37.0	3288	27274	7793
2020	31.26	8.48	36.5	3299	27477	7851
2020	34.68	7.65	32.9	3368	28895	8256
2020	40.53	6.54	28.1	3459	30000	8890
2165	44.89	6.33	25.4	3477	30000	9055
2310	49.80	6.09	22.9	3497	30000	9242
2730	54.30	6.60	21.0	3539	30000	9634
2730	59.36	6.04	19.2	3578	30000	10050
2820	62.59	5.92	18.2	3588	30000	10168
2815	69.43	5.32	16.4	3628	30000	10678
2990	74.42	5.28	15.3	3632	30000	10758
2990	80.04	4.91	14.2	3658	30000	11135
2990	89.87	4.37	12.7	3696	30000	11752
2990	99.70	3.94	11.4	3726	30000	12326
2990	106.65	3.68	10.7	3744	30000	12709
2990	119.60	3.28	9.5	3772	30000	13380
2990	129.96	3.02	8.8	3790	30000	13884
2990	144.43	2.72	7.9	3811	30000	14543
2990	160.23	2.45	7.1	3830	30000	15214
2990	180.40	2.18	6.3	3849	30000	16009

IB143

Mn_2 [Nm]	i	Pn_1 [kW]	n2 [rpm]	Fr1 [N]	Fr2 D-S-P [N]	Fr2 C [N]
2165	10.84	26.23	105.2	2257	17051	17051
2240	11.87	24.79	96.1	2355	17540	17540
2240	14.49	20.31	78.7	2653	19421	19421
2310	17.04	17.80	66.9	2818	20722	20722
2600	18.66	18.30	61.1	2785	20361	20361
2890	21.00	18.08	54.3	2801	20331	20331
3180	22.77	18.34	50.1	2784	19930	19930
3325	25.63	17.04	44.5	2870	20640	20640
3325	27.44	15.91	41.5	2945	21455	21455
3395	30.05	14.84	37.9	3016	22236	22236
3395	33.01	13.51	34.5	3104	23422	23422
3470	36.67	12.43	31.1	3177	24465	24465
3470	40.29	11.31	28.3	3251	25732	25732
3470	44.16	10.32	25.8	3317	27005	27005
3615	48.35	9.82	23.6	3350	27648	27648

5.4 IB/IBA GEAR REDUCER - 1140 RPM

IB143

Mn_2 [Nm]	i	Pn_1 [kW]	n2 [rpm]	Fr1 [N]	Fr2 D-S-P [N]	Fr2 C [N]
4270	53.16	10.55	21.4	3409	29045	29045
4270	54.63	10.26	20.9	3425	29456	29456
4270	59.02	9.50	19.3	3468	30639	30639
4270	64.88	8.64	17.6	3516	32132	32132
4270	70.43	7.96	16.2	3555	33463	33463
4270	77.12	7.27	14.8	3593	34976	34976
4270	85.54	6.56	13.3	3634	36763	36763
4270	94.13	5.96	12.1	3667	38465	38465
4270	105.83	5.30	10.8	3704	40000	40000
4270	111.94	5.01	10.2	3721	40000	40000
4270	124.62	4.50	9.2	3749	40000	40000
4270	136.44	4.11	8.4	3771	40000	40000
4270	149.59	3.75	7.6	3792	40000	40000
4270	166.53	3.37	6.8	3813	40000	40000
4270	187.24	2.99	6.1	3834	40000	40000

IB153

Mn_2 [Nm]	i	Pn_1 [kW]	n2 [rpm]	Fr1 [N]	Fr2 D-S-P [N]	Fr2 C [N]
3212	10.49	40.20	108.7	6961	35245	35245
3250	12.64	33.76	90.2	7457	37910	37910
3615	14.01	33.88	81.4	7450	38700	38700
3615	15.40	30.83	74.0	7669	40164	40164
4335	18.56	30.68	61.4	7678	41686	41686
4695	20.56	29.98	55.4	7727	42683	42683
4845	23.86	26.67	47.8	7967	45019	45019
4915	25.19	25.63	45.3	8041	45863	45863
5780	28.23	26.89	40.4	7950	46211	46211
5780	30.35	25.01	37.6	8084	47617	47617
5780	33.63	22.57	33.9	8259	49675	49675
5785	35.02	21.69	32.6	8323	50502	50502
5785	38.81	19.58	29.4	8474	52659	52659
5785	42.30	17.96	26.9	8590	54522	54522
5780	47.53	15.97	24.0	8731	57136	57136
6835	50.56	17.75	22.6	8800	58561	58561
6835	54.64	16.43	20.9	8880	60391	60391
6835	57.27	15.67	19.9	8926	61524	61524
6835	60.92	14.73	18.7	8983	63040	63040
6835	63.47	14.14	18.0	9019	64061	64061
6835	71.15	12.62	16.0	9111	65000	65000
6835	77.22	11.62	14.8	9171	65000	65000
6835	83.89	10.70	13.6	9227	65000	65000
6835	87.65	10.24	13.0	9255	65000	65000
6835	93.05	9.65	12.2	9291	65000	65000

5.4 IB/IBA GEAR REDUCER - 1140 RPM

IB153

Mn_2 [Nm]	i	Pn_1 [kW]	n2 [rpm]	Fr1 [N]	Fr2 D-S-P [N]	Fr2 C [N]
6835	103.12	8.70	11.1	9348	65000	65000
6835	123.88	7.25	9.2	9436	65000	65000
6835	134.27	6.69	8.5	9470	65000	65000
6835	149.26	6.01	7.6	9511	65000	65000
6835	165.42	5.43	6.9	9546	65000	65000

IB163

Mn_2 [Nm]	i	Pn_1 [kW]	n2 [rpm]	Fr1 [N]	Fr2 D-S-P [N]	Fr2 C [N]
3277	8.89	48.40	128.2	6992	49918	49918
3785	10.58	47.00	107.8	7069	51605	51605
5565	11.87	61.57	96.0	7496	54517	54517
5365	12.81	55.00	89.0	7330	54285	54285
5705	14.08	53.20	81.0	7353	55080	55080
6524	15.52	55.20	73.5	7516	56720	56720
7160	16.39	57.38	69.6	7690	58246	58246
7520	18.02	54.81	63.3	7807	59766	59766
7735	19.96	50.90	57.1	7986	61920	61920
7515	21.94	44.97	52.0	8257	65037	65000
7590	24.17	41.23	47.2	8429	67572	65000
8025	26.58	39.65	42.9	8502	69244	65000
7375	28.80	33.63	39.6	8778	73249	65000
8315	30.92	35.31	36.9	8700	73095	65000
8600	34.25	32.97	33.3	8807	75594	65000
8890	37.66	31.00	30.3	8897	77959	65000
9180	40.65	29.65	28.0	8959	79796	65000
8675	45.09	25.26	25.3	9160	80000	65000
11110	51.00	28.61	22.4	9209	80000	65000
11110	53.63	27.21	21.3	9264	80000	65000
11110	58.97	24.74	19.3	9359	80000	65000
11110	69.78	20.91	16.3	9508	80000	65000
11110	76.72	19.02	14.9	9581	80000	65000
11110	87.54	16.67	13.0	9672	80000	65000
11110	96.25	15.16	11.8	9730	80000	65000
11110	103.93	14.04	11.0	9774	80000	65000
11110	114.27	12.77	10.0	9823	80000	65000
11110	126.29	11.55	9.0	9870	80000	65000
11110	138.85	10.51	8.2	9911	80000	65000
11110	154.83	9.42	7.4	9953	80000	65000

5.5 IB/IBA GEAR REDUCER - 900 RPM

IBA42

Mn_2 [Nm]	i	Pn_1 [kW]	n2 [rpm]	Fr1 [N]	Fr2 D-S-P [N]	Fr2 C [N]
77	7.62	0.99	118.2	373	-	2102
77	10.62	0.71	84.7	355	-	2349
77	12.95	0.58	69.5	406	-	2509
77	14.46	0.52	62.2	443	-	2603
102	16.47	0.61	54.6	579	-	2718
103	22.97	0.44	39.2	355	-	3037
102	28.00	0.36	32.1	406	-	3244
102	31.27	0.32	28.8	443	-	3366
103	33.78	0.30	26.6	458	-	3454
102	47.12	0.21	19.1	355	-	3859
102	57.43	0.17	15.7	406	-	4000
92	64.13	0.14	14.0	406	-	4000
95	78.17	0.12	11.5	406	-	4000

IBA52

Mn_2 [Nm]	i	Pn_1 [kW]	n2 [rpm]	Fr1 [N]	Fr2 D-S-P [N]	Fr2 C [N]
137	7.91	1.70	113.8	373	-	2281
137	9.46	1.42	95.1	414	-	2421
136	11.57	1.15	77.8	405	-	2589
137	14.63	0.92	61.5	392	-	2799
171	17.11	0.98	52.6	529	-	2950
171	20.46	0.82	44.0	414	-	3131
170	25.03	0.67	36.0	405	-	3349
172	31.63	0.53	28.4	392	-	3620
171	35.10	0.48	25.6	446	-	3748
172	41.97	0.40	21.4	414	-	3978
188	51.34	0.36	17.5	445	-	4000
172	64.87	0.26	13.9	356	-	4000
171	79.07	0.21	11.4	406	-	4000

IBA53

Mn_2 [Nm]	i	Pn_1 [kW]	n2 [rpm]	Fr1 [N]	Fr2 D-S-P [N]	Fr2 C [N]
189	73.70	0.27	12.2	472	-	4000
186	93.33	0.21	9.6	472	-	4000
187	111.61	0.17	8.1	472	-	4000
186	136.53	0.14	6.6	472	-	4000
190	172.53	0.11	5.2	472	-	4000
186	197.11	0.10	4.6	472	-	4000
183	249.08	0.08	3.6	472	-	4000
185	271.16	0.07	3.3	472	-	4000
180	342.65	0.05	2.6	472	-	4000

5.5 IB/IBA GEAR REDUCER - 900 RPM

IBA72

Mn_2 [Nm]	i	Pn_1 [kW]	n2 [rpm]	Fr1 [N]	Fr2 D-S-P [N]	Fr2 C [N]
298	8.36	3.50	107.7	664	5885	2942
298	10.06	2.91	89.5	685	6260	3130
298	12.44	2.35	72.3	667	6720	3360
358	14.91	2.36	60.4	826	7137	3568
358	17.94	1.96	50.2	685	7592	3796
358	22.19	1.58	40.5	667	8150	4075
358	27.45	1.28	32.8	667	8748	4374
358	33.04	1.06	27.2	685	9306	4653
340	40.87	0.82	22.0	635	9989	4995
298	45.64	0.64	19.7	646	10000	5182
298	54.94	0.53	16.4	685	10000	5500
296	67.96	0.43	13.2	667	10000	5500

IBA73

Mn_2 [Nm]	i	Pn_1 [kW]	n2 [rpm]	Fr1 [N]	Fr2 D-S-P [N]	Fr2 C [N]
384	43.89	0.91	20.5	330	10000	5115
384	52.83	0.75	17.0	411	10000	5441
382	65.35	0.61	13.8	400	10000	5500
384	80.83	0.49	11.1	400	10000	5500
382	97.29	0.41	9.2	411	10000	5500
384	120.34	0.33	7.5	400	10000	5500
384	149.73	0.27	6.0	398	10000	5500
386	180.23	0.22	5.0	411	10000	5500
384	222.93	0.18	4.0	400	10000	5500
382	260.20	0.15	3.5	424	10000	5500
388	321.85	0.12	2.8	400	10000	5500
374	357.95	0.11	2.5	445	10000	5500
394	442.76	0.09	2.0	400	10000	5500

IB063

Mn_2 [Nm]	i	Pn_1 [kW]	n2 [rpm]	Fr1 [N]	Fr2 D-S-P [N]	Fr2 C [N]
208	5.71	3.77	157.5	270	8278	2365
244	6.88	3.68	130.8	294	8651	2472
252	7.32	3.57	122.9	324	8817	2519
332	9.16	3.76	98.2	280	9099	2600
374	10.26	3.78	87.7	272	9246	2642
390	11.03	3.67	81.6	302	9432	2695
418	12.35	3.51	72.8	339	9701	2772
426	13.15	3.36	68.4	377	9913	2832
426	15.18	2.91	59.3	485	10527	3008
432	17.00	2.63	52.9	551	10989	3140

5.5 IB/IBA GEAR REDUCER - 900 RPM

IB063

Mn_2 [Nm]	i	Pn_1 [kW]	n2 [rpm]	Fr1 [N]	Fr2 D-S-P [N]	Fr2 C [N]
432	22.39	2.00	40.2	705	12000	3516
432	26.09	1.72	34.5	774	12000	3740
432	28.03	1.60	32.1	803	12000	3849
432	33.43	1.34	26.9	865	12000	4128
432	38.58	1.16	23.3	909	12000	4367
432	43.22	1.04	20.8	939	12000	4565
510	50.81	1.04	17.7	977	12000	4860
510	56.93	0.93	15.8	1000	12000	5076
510	69.16	0.76	13.0	1034	12000	5467
510	77.48	0.68	11.6	1050	12000	5707
510	90.33	0.59	10.0	1070	12000	6045
510	101.20	0.52	8.9	1083	12000	6308
510	111.74	0.47	8.1	1094	12000	6544
510	124.20	0.43	7.2	1103	12000	6805
510	139.15	0.38	6.5	1113	12000	7097
510	157.42	0.34	5.7	1122	12000	7425

IB083

Mn_2 [Nm]	i	Pn_1 [kW]	n2 [rpm]	Fr1 [N]	Fr2 D-S-P [N]	Fr2 C [N]
360	7.81	4.78	115.2	1619	14076	4022
432	8.62	5.19	104.4	1500	14190	4054
468	10.49	4.62	85.8	1664	15098	4314
540	11.59	4.83	77.7	1604	15267	4362
585	14.43	4.20	62.4	1789	16398	4685
610	16.60	3.81	54.2	1895	17165	4904
610	18.32	3.45	49.1	2000	17855	5102
610	22.82	2.77	39.4	2197	18000	5562
610	26.71	2.37	33.7	2314	18000	5914
610	29.50	2.14	30.5	2378	18000	6145
610	31.80	1.99	28.3	2423	18000	6325
610	34.49	1.83	26.1	2468	18000	6525
610	39.60	1.60	22.7	2500	18000	6877
610	42.95	1.47	20.9	2500	18000	7092
610	45.44	1.39	19.8	2500	18000	7245
725	51.19	1.47	17.6	2500	18000	7577
725	55.52	1.35	16.2	2500	18000	7811
725	59.96	1.25	15.0	2500	18000	8038
725	63.74	1.18	14.1	2500	18000	8223
725	69.14	1.09	13.0	2500	18000	8475
725	73.14	1.03	12.3	2500	18000	8653
725	80.76	0.93	11.1	2500	18000	8975
725	92.19	0.82	9.8	2500	18000	9421
725	100.57	0.75	8.9	2500	18000	9726

5.5 IB/IBA GEAR REDUCER - 900 RPM

IB083

Mn_2 [Nm]	i	Pn_1 [kW]	n2 [rpm]	Fr1 [N]	Fr2 D-S-P [N]	Fr2 C [N]
725	105.29	0.71	8.6	2500	18000	9890
725	116.25	0.65	7.7	2500	18000	10253
725	126.76	0.59	7.1	2500	18000	10580
725	144.77	0.52	6.2	2500	18000	11100

IB103

Mn_2 [Nm]	i	Pn_1 [kW]	n2 [rpm]	Fr1 [N]	Fr2 D-S-P [N]	Fr2 C [N]
1010	17.27	6.06	52.1	1336	21247	6070
1010	19.06	5.50	47.2	1490	22000	6311
1010	23.70	4.42	38.0	1782	22000	6872
1080	26.51	4.22	34.0	1833	22000	7090
1155	30.55	3.92	29.5	1918	22000	7406
1225	33.07	3.84	27.2	1937	22000	7552
1225	35.87	3.54	25.1	2019	22000	7797
1225	41.12	3.09	21.9	2142	22000	8224
1225	44.61	2.85	20.2	2207	22000	8488
1225	47.28	2.69	19.0	2251	22000	8681
1450	50.24	2.99	17.9	2294	22000	8886
1450	53.02	2.84	17.0	2330	22000	9072
1450	58.50	2.57	15.4	2391	22000	9420
1450	64.89	2.32	13.9	2449	22000	9798
1450	68.58	2.19	13.1	2478	22000	10006
1450	72.76	2.07	12.4	2506	22000	10232
1450	78.92	1.90	11.4	2544	22000	10550
1535	83.66	1.90	10.8	2544	22000	10697
1535	92.31	1.72	9.8	2585	22000	11102
1535	105.44	1.51	8.5	2634	22000	11670
1535	114.80	1.39	7.8	2662	22000	12046
1535	120.42	1.32	7.5	2677	22000	12262
1535	132.87	1.20	6.8	2706	22000	12718
1535	144.69	1.10	6.2	2728	22000	13125
1535	165.25	0.96	5.5	2760	22000	13783

IB123

Mn_2 [Nm]	i	Pn_1 [kW]	n2 [rpm]	Fr1 [N]	Fr2 D-S-P [N]	Fr2 C [N]
1085	7.97	14.12	113.0	2489	20762	5932
1300	9.62	14.01	93.6	2498	21113	6032
1445	10.33	14.50	87.1	2447	20861	5960
1445	12.48	12.00	72.1	2714	22821	6520
1515	13.84	11.35	65.0	2783	23470	6706
1515	15.38	10.21	58.5	2905	24658	7045

5.5 IB/IBA GEAR REDUCER - 900 RPM

IB123

Mn_2 [Nm]	i	Pn_1 [kW]	n2 [rpm]	Fr1 [N]	Fr2 D-S-P [N]	Fr2 C [N]
1590	18.58	8.87	48.5	3050	26410	7546
1805	20.61	9.08	43.7	3027	26253	7501
2020	22.78	9.19	39.5	3014	26094	7455
2020	25.89	8.09	34.8	3132	27801	7943
2020	27.51	7.61	32.7	3184	28638	8182
2020	30.79	6.80	29.2	3271	30000	8639
2020	31.26	6.70	28.8	3282	30000	8701
2020	34.68	6.04	25.9	3353	30000	9139
2020	40.53	5.17	22.2	3446	30000	9825
2165	44.89	5.00	20.1	3464	30000	10019
2310	49.80	4.81	18.1	3485	30000	10236
2730	54.30	5.21	16.6	3528	30000	10660
2730	59.36	4.77	15.2	3568	30000	11110
2820	62.59	4.67	14.4	3578	30000	11246
2815	69.43	4.20	13.0	3619	30000	11796
2990	74.42	4.17	12.1	3623	30000	11899
2990	80.04	3.87	11.2	3650	30000	12306
2990	89.87	3.45	10.0	3688	30000	12973
2990	99.70	3.11	9.0	3719	30000	13593
2990	106.65	2.91	8.4	3738	30000	14008
2990	119.60	2.59	7.5	3766	30000	14733
2990	129.96	2.39	6.9	3785	30000	15277
2990	144.43	2.15	6.2	3807	30000	15990
2990	160.23	1.93	5.6	3826	30000	16715
2990	180.40	1.72	5.0	3845	30000	17575

IB143

Mn_2 [Nm]	i	Pn_1 [kW]	n2 [rpm]	Fr1 [N]	Fr2 D-S-P [N]	Fr2 C [N]
2165	10.84	20.71	83.0	2214	18991	18991
2240	11.87	19.57	75.8	2315	19538	19538
2240	14.49	16.03	62.1	2620	21572	21572
2310	17.04	14.05	52.8	2789	22997	22997
2600	18.66	14.45	48.2	2756	22681	22681
2890	21.00	14.27	42.9	2771	22722	22722
3180	22.77	14.48	39.5	2754	22363	22363
3325	25.63	13.45	35.1	2843	23168	23168
3325	27.44	12.56	32.8	2919	24049	24049
3395	30.05	11.71	29.9	2992	24912	24912
3395	33.01	10.66	27.3	3082	26194	26194
3470	36.67	9.81	24.5	3157	27341	27341
3470	40.29	8.93	22.3	3233	28710	28710
3470	44.16	8.15	20.4	3300	30087	30087
3615	48.35	7.75	18.6	3334	30819	30819

5.5 IB/IBA GEAR REDUCER - 900 RPM

IB143

Mn_2 [Nm]	i	Pn_1 [kW]	n2 [rpm]	Fr1 [N]	Fr2 D-S-P [N]	Fr2 C [N]
4270	53.16	8.33	16.9	3395	32330	32330
4270	54.63	8.10	16.5	3411	32773	32773
4270	59.02	7.50	15.2	3455	34052	34052
4270	64.88	6.82	13.9	3504	35666	35666
4270	70.43	6.29	12.8	3544	37106	37106
4270	77.12	5.74	11.7	3583	38741	38741
4270	85.54	5.18	10.5	3625	40000	40000
4270	94.13	4.70	9.6	3659	40000	40000
4270	105.83	4.18	8.5	3697	40000	40000
4270	111.94	3.95	8.0	3714	40000	40000
4270	124.62	3.55	7.2	3743	40000	40000
4270	136.44	3.24	6.6	3766	40000	40000
4270	149.59	2.96	6.0	3786	40000	40000
4270	166.53	2.66	5.4	3808	40000	40000
4270	187.24	2.36	4.8	3830	40000	40000

IB153

Mn_2 [Nm]	i	Pn_1 [kW]	n2 [rpm]	Fr1 [N]	Fr2 D-S-P [N]	Fr2 C [N]
3250	10.49	32.11	85.8	6890	38488	38488
3250	12.64	26.65	71.2	7398	41370	41370
3615	14.01	26.75	64.2	7391	42266	42266
3615	15.40	24.34	58.4	7615	43850	43850
4335	18.56	24.22	48.5	7624	45580	45580
4695	20.56	23.67	43.8	7675	46701	46701
4845	23.86	21.05	37.7	7920	49243	49243
4915	25.19	20.23	35.7	7996	50164	50164
5780	28.23	21.23	31.9	7903	50642	50642
5780	30.35	19.75	29.7	8040	52163	52163
5780	33.63	17.82	26.8	8219	54387	54387
5785	35.02	17.13	25.7	8285	55282	55282
5785	38.81	15.45	23.2	8440	57613	57613
5785	42.30	14.18	21.3	8559	59628	59628
5780	47.53	12.61	18.9	8704	62454	62454
6835	50.56	14.01	17.8	8774	63995	63995
6835	54.64	12.97	16.5	8856	65000	65000
6835	57.27	12.37	15.7	8903	65000	65000
6835	60.92	11.63	14.8	8961	65000	65000
6835	63.47	11.16	14.2	8998	65000	65000
6835	71.15	9.96	12.7	9092	65000	65000
6835	77.22	9.18	11.7	9154	65000	65000
6835	83.89	8.45	10.7	9211	65000	65000
6835	87.65	8.08	10.3	9240	65000	65000
6835	93.05	7.62	9.7	9277	65000	65000

5.5 IB/IBA GEAR REDUCER - 900 RPM

IB153

Mn_2 [Nm]	i	Pn_1 [kW]	n2 [rpm]	Fr1 [N]	Fr2 D-S-P [N]	Fr2 C [N]
6835	103.12	6.87	8.7	9335	65000	65000
6835	123.88	5.72	7.3	9425	65000	65000
6835	134.27	5.28	6.7	9460	65000	65000
6835	149.26	4.75	6.0	9502	65000	65000
6835	165.42	4.28	5.4	9538	65000	65000

IB163

Mn_2 [Nm]	i	Pn_1 [kW]	n2 [rpm]	Fr1 [N]	Fr2 D-S-P [N]	Fr2 C [N]
4151	8.89	48.40	101.2	6911	54659	54659
4794	10.58	47.00	85.1	6990	56595	56595
5565	11.87	48.61	75.8	7428	59722	59722
6360	12.81	51.48	70.3	7257	59584	59584
6940	14.08	51.09	63.9	7281	60524	60524
7230	15.52	48.29	58.0	7448	62338	62338
7160	16.39	45.30	54.9	7626	63977	63977
7520	18.02	43.27	50.0	7746	65672	65000
7735	19.96	40.18	45.1	7929	68031	65000
7515	21.94	35.51	41.0	8206	71371	65000
7590	24.17	32.55	37.2	8383	74121	65000
8025	26.58	31.30	33.9	8457	75990	65000
7375	28.80	26.55	31.2	8740	80000	65000
8315	30.92	27.88	29.1	8661	80000	65000
8600	34.25	26.03	26.3	8770	80000	65000
8890	37.66	24.47	23.9	8863	80000	65000
9180	40.65	23.41	22.1	8926	80000	65000
8675	45.09	19.95	20.0	9132	80000	65000
11110	51.00	22.58	17.6	9182	80000	65000
11110	53.63	21.48	16.8	9238	80000	65000
11110	58.97	19.53	15.3	9336	80000	65000
11110	69.78	16.51	12.9	9488	80000	65000
11110	76.72	15.01	11.7	9563	80000	65000
11110	87.54	13.16	10.3	9656	80000	65000
11110	96.25	11.97	9.3	9716	80000	65000
11110	103.93	11.08	8.7	9761	80000	65000
11110	114.27	10.08	7.9	9811	80000	65000
11110	126.29	9.12	7.1	9859	80000	65000
11110	138.85	8.30	6.5	9901	80000	65000
11110	154.83	7.44	5.8	9944	80000	65000

5.6 IB/IBA GEAR REDUCER - 700 RPM

IBA42

Mn_2 [Nm]	i	Pn_1 [kW]	n2 [rpm]	Fr1 [N]	Fr2 D-S-P [N]	Fr2 C [N]
77	7.62	0.77	91.9	373	-	2286
77	10.62	0.55	65.9	355	-	2554
77	12.95	0.45	54.1	406	-	2728
77	14.46	0.40	48.4	443	-	2830
102	16.47	0.47	42.5	579	-	2956
103	22.97	0.34	30.5	355	-	3303
102	28.00	0.28	25.0	406	-	3528
102	31.27	0.25	22.4	443	-	3660
103	33.78	0.23	20.7	458	-	3756
102	47.12	0.16	14.9	355	-	4000
102	57.43	0.14	12.2	406	-	4000
92	64.13	0.11	10.9	406	-	4000
95	78.17	0.09	9.0	406	-	4000

IBA52

Mn_2 [Nm]	i	Pn_1 [kW]	n2 [rpm]	Fr1 [N]	Fr2 D-S-P [N]	Fr2 C [N]
137	7.91	1.32	88.5	373	-	2480
137	9.46	1.10	74.0	414	-	2633
136	11.57	0.89	60.5	405	-	2816
137	14.63	0.71	47.9	392	-	3044
171	17.11	0.76	40.9	529	-	3208
171	20.46	0.64	34.2	414	-	3405
170	25.03	0.52	28.0	405	-	3641
172	31.63	0.41	22.1	392	-	3936
171	35.10	0.37	19.9	446	-	4000
172	41.97	0.31	16.7	414	-	4000
188	51.34	0.28	13.6	445	-	4000
172	64.87	0.20	10.8	356	-	4000
171	79.07	0.16	8.8	406	-	4000

IBA53

Mn_2 [Nm]	i	Pn_1 [kW]	n2 [rpm]	Fr1 [N]	Fr2 D-S-P [N]	Fr2 C [N]
189	73.70	0.21	9.5	472	-	4000
186	93.33	0.16	7.5	472	-	4000
187	111.61	0.13	6.3	472	-	4000
186	136.53	0.11	5.1	472	-	4000
190	172.53	0.09	4.1	472	-	4000
186	197.11	0.08	3.5	472	-	4000
183	249.08	0.06	2.8	472	-	4000
185	271.16	0.05	2.6	472	-	4000
180	342.65	0.04	2.0	472	-	4000

5.6 IB/IBA GEAR REDUCER - 700 RPM

IBA72

Mn_2 [Nm]	i	Pn_1 [kW]	n2 [rpm]	Fr1 [N]	Fr2 D-S-P [N]	Fr2 C [N]
298	8.36	2.71	83.8	664	6399	3200
298	10.06	2.25	69.6	685	6807	3404
298	12.44	1.82	56.3	667	7307	3654
358	14.91	1.83	47.0	826	7761	3880
358	17.94	1.52	39.0	685	8255	4128
358	22.19	1.23	31.5	667	8862	4431
358	27.45	0.99	25.5	667	9512	4756
358	33.04	0.82	21.2	685	10000	5059
340	40.87	0.63	17.1	635	10000	5431
298	45.64	0.50	15.3	646	10000	5500
298	54.94	0.41	12.7	685	10000	5500
296	67.96	0.33	10.3	667	10000	5500

IBA73

Mn_2 [Nm]	i	Pn_1 [kW]	n2 [rpm]	Fr1 [N]	Fr2 D-S-P [N]	Fr2 C [N]
384	43.89	0.70	15.9	330	10000	5500
384	52.83	0.58	13.2	411	10000	5500
382	65.35	0.47	10.7	400	10000	5500
384	80.83	0.38	8.7	400	10000	5500
382	97.29	0.32	7.2	411	10000	5500
384	120.34	0.26	5.8	400	10000	5500
384	149.73	0.21	4.7	398	10000	5500
386	180.23	0.17	3.9	411	10000	5500
384	222.93	0.14	3.1	400	10000	5500
382	260.20	0.12	2.7	424	10000	5500
388	321.85	0.10	2.2	400	10000	5500
374	357.95	0.08	2.0	445	10000	5500
394	442.76	0.07	1.6	400	10000	5500

IB063

Mn_2 [Nm]	i	Pn_1 [kW]	n2 [rpm]	Fr1 [N]	Fr2 D-S-P [N]	Fr2 C [N]
208	5.71	2.92	122.5	259	9097	2599
244	6.88	2.85	101.8	283	9519	2720
252	7.32	2.76	95.6	313	9703	2772
332	9.16	2.91	76.4	269	10049	2871
374	10.26	2.92	68.2	261	10229	2923
390	11.03	2.84	63.5	292	10438	2982
418	12.35	2.71	56.7	329	10744	3070
426	13.15	2.60	53.2	367	10978	3137
426	15.18	2.25	46.1	477	11646	3327
432	17.00	2.04	41.2	543	12000	3472

5.6 IB/IBA GEAR REDUCER - 700 RPM

IB063

Mn_2 [Nm]	i	Pn_1 [kW]	n2 [rpm]	Fr1 [N]	Fr2 D-S-P [N]	Fr2 C [N]
432	22.39	1.55	31.3	699	12000	3880
432	26.09	1.33	26.8	769	12000	4124
432	28.03	1.24	25.0	798	12000	4242
432	33.43	1.04	20.9	861	12000	4545
432	38.58	0.90	18.1	905	12000	4805
432	43.22	0.80	16.2	936	12000	5020
510	50.81	0.81	13.8	974	12000	5340
510	56.93	0.72	12.3	997	12000	5576
510	69.16	0.59	10.1	1032	12000	6000
510	77.48	0.53	9.0	1049	12000	6261
510	90.33	0.45	7.8	1069	12000	6629
510	101.20	0.40	6.9	1082	12000	6914
510	111.74	0.37	6.3	1092	12000	7171
510	124.20	0.33	5.6	1102	12000	7454
510	139.15	0.29	5.0	1112	12000	7771
510	157.42	0.26	4.5	1121	12000	8000

IB083

Mn_2 [Nm]	i	Pn_1 [kW]	n2 [rpm]	Fr1 [N]	Fr2 D-S-P [N]	Fr2 C [N]
360	7.81	3.70	89.6	1603	15452	4415
432	8.62	4.02	81.2	1482	15607	4459
468	10.49	3.58	66.7	1648	16610	4746
540	11.59	3.74	60.4	1588	16825	4807
585	14.43	3.25	48.5	1775	18000	5163
610	16.60	2.95	42.2	1882	18000	5405
610	18.32	2.67	38.2	1988	18000	5620
610	22.82	2.15	30.7	2187	18000	6120
610	26.71	1.83	26.2	2306	18000	6502
610	29.50	1.66	23.7	2371	18000	6753
610	31.80	1.54	22.0	2417	18000	6949
610	34.49	1.42	20.3	2462	18000	7166
610	39.60	1.24	17.7	2500	18000	7549
610	42.95	1.14	16.3	2500	18000	7783
610	45.44	1.08	15.4	2500	18000	7948
725	51.19	1.14	13.7	2500	18000	8309
725	55.52	1.05	12.6	2500	18000	8563
725	59.96	0.97	11.7	2500	18000	8810
725	63.74	0.91	11.0	2500	18000	9011
725	69.14	0.84	10.1	2500	18000	9284
725	73.14	0.80	9.6	2500	18000	9478
725	80.76	0.72	8.7	2500	18000	9828
725	92.19	0.63	7.6	2500	18000	10313
725	100.57	0.58	7.0	2500	18000	10644

5.6 IB/IBA GEAR REDUCER - 700 RPM

IB083

Mn_2 [Nm]	i	Pn_1 [kW]	n2 [rpm]	Fr1 [N]	Fr2 D-S-P [N]	Fr2 C [N]
725	105.29	0.55	6.7	2500	18000	10822
725	116.25	0.50	6.0	2500	18000	11216
725	126.76	0.46	5.5	2500	18000	11571
725	144.77	0.40	4.8	2500	18000	12000

IB103

Mn_2 [Nm]	i	Pn_1 [kW]	n2 [rpm]	Fr1 [N]	Fr2 D-S-P [N]	Fr2 C [N]
1010	17.27	4.69	40.5	1316	22000	6685
1010	19.06	4.25	36.7	1472	22000	6946
1010	23.70	3.42	29.5	1768	22000	7556
1080	26.51	3.27	26.4	1819	22000	7800
1155	30.55	3.03	22.9	1905	22000	8149
1225	33.07	2.97	21.2	1925	22000	8314
1225	35.87	2.74	19.5	2007	22000	8581
1225	41.12	2.39	17.0	2132	22000	9045
1225	44.61	2.20	15.7	2198	22000	9331
1225	47.28	2.08	14.8	2242	22000	9541
1450	50.24	2.32	13.9	2286	22000	9764
1450	53.02	2.19	13.2	2322	22000	9966
1450	58.50	1.99	12.0	2384	22000	10344
1450	64.89	1.79	10.8	2443	22000	10755
1450	68.58	1.70	10.2	2472	22000	10980
1450	72.76	1.60	9.6	2501	22000	11226
1450	78.92	1.47	8.9	2538	22000	11572
1535	83.66	1.47	8.4	2539	22000	11738
1535	92.31	1.33	7.6	2580	22000	12177
1535	105.44	1.17	6.6	2630	22000	12794
1535	114.80	1.07	6.1	2659	22000	13203
1535	120.42	1.02	5.8	2674	22000	13438
1535	132.87	0.93	5.3	2702	22000	13933
1535	144.69	0.85	4.8	2725	22000	14376
1535	165.25	0.75	4.2	2757	22000	15000

IB123

Mn_2 [Nm]	i	Pn_1 [kW]	n2 [rpm]	Fr1 [N]	Fr2 D-S-P [N]	Fr2 C [N]
1085	7.97	10.93	87.9	2471	23098	6599
1300	9.62	10.84	72.8	2480	23587	6739
1445	10.33	11.22	67.7	2428	23384	6681
1445	12.48	9.29	56.1	2699	25514	7290
1515	13.84	8.78	50.6	2768	26255	7501
1515	15.38	7.90	45.5	2892	27546	7870

5.6 IB/IBA GEAR REDUCER - 700 RPM

IB123

Mn_2 [Nm]	i	Pn_1 [kW]	n2 [rpm]	Fr1 [N]	Fr2 D-S-P [N]	Fr2 C [N]
1590	18.58	6.87	37.7	3039	29486	8425
1805	20.61	7.03	34.0	3015	29423	8407
2020	22.78	7.11	30.7	3002	29358	8388
2020	25.89	6.26	27.0	3122	30000	8918
2020	27.51	5.89	25.4	3174	30000	9178
2020	30.79	5.26	22.7	3262	30000	9674
2020	31.26	5.18	22.4	3273	30000	9742
2020	34.68	4.67	20.2	3345	30000	10217
2020	40.53	4.00	17.3	3440	30000	10963
2165	44.89	3.87	15.6	3458	30000	11193
2310	49.80	3.72	14.1	3479	30000	11450
2730	54.30	4.03	12.9	3522	30000	11911
2730	59.36	3.69	11.8	3563	30000	12399
2820	62.59	3.62	11.2	3573	30000	12557
2815	69.43	3.25	10.1	3615	30000	13155
2990	74.42	3.22	9.4	3619	30000	13287
2990	80.04	3.00	8.8	3646	30000	13729
2990	89.87	2.67	7.8	3685	30000	14454
2990	99.70	2.41	7.0	3716	30000	15128
2990	106.65	2.25	6.6	3734	30000	15579
2990	119.60	2.01	5.8	3763	30000	16367
2990	129.96	1.85	5.4	3782	30000	16958
2990	144.43	1.66	4.8	3804	30000	17732
2990	160.23	1.50	4.4	3824	30000	18520
2990	180.40	1.33	3.9	3843	30000	19455

IB143

Mn_2 [Nm]	i	Pn_1 [kW]	n2 [rpm]	Fr1 [N]	Fr2 D-S-P [N]	Fr2 C [N]
2165	10.84	16.03	64.6	2193	21383	21383
2240	11.87	15.15	59.0	2294	22002	22002
2240	14.49	12.41	48.3	2603	24212	24212
2310	17.04	10.88	41.1	2775	25785	25785
2600	18.66	11.18	37.5	2741	25542	25542
2890	21.00	11.04	33.3	2757	25686	25686
3180	22.77	11.20	30.7	2739	25396	25396
3325	25.63	10.41	27.3	2829	26320	26320
3325	27.44	9.72	25.5	2906	27277	27277
3395	30.05	9.07	23.3	2980	28240	28240
3395	33.01	8.25	21.2	3071	29633	29633
3470	36.67	7.59	19.1	3147	30904	30904
3470	40.29	6.91	17.4	3223	32391	32391
3470	44.16	6.30	15.8	3292	33887	33887
3615	48.35	6.00	14.5	3326	34732	34732

5.6 IB/IBA GEAR REDUCER - 700 RPM

IB143

Mn_2 [Nm]	i	Pn_1 [kW]	n2 [rpm]	Fr1 [N]	Fr2 D-S-P [N]	Fr2 C [N]
4270	53.16	6.45	13.2	3387	36374	36374
4270	54.63	6.27	12.8	3404	36856	36856
4270	59.02	5.81	11.9	3448	38246	38246
4270	64.88	5.28	10.8	3499	39999	39999
4270	70.43	4.86	9.9	3538	40000	40000
4270	77.12	4.44	9.1	3578	40000	40000
4270	85.54	4.01	8.2	3620	40000	40000
4270	94.13	3.64	7.4	3655	40000	40000
4270	105.83	3.24	6.6	3693	40000	40000
4270	111.94	3.06	6.2	3710	40000	40000
4270	124.62	2.75	5.6	3740	40000	40000
4270	136.44	2.51	5.1	3763	40000	40000
4270	149.59	2.29	4.7	3784	40000	40000
4270	166.53	2.06	4.2	3806	40000	40000
4270	187.24	1.83	3.7	3828	40000	40000

IB153

Mn_2 [Nm]	i	Pn_1 [kW]	n2 [rpm]	Fr1 [N]	Fr2 D-S-P [N]	Fr2 C [N]
3250	10.49	24.85	66.7	6854	42333	42333
3250	12.64	20.63	55.4	7368	45464	45464
3615	14.01	20.70	50.0	7362	46495	46495
3615	15.40	18.84	45.5	7588	48216	48216
4335	18.56	18.75	37.7	7598	50211	50211
4695	20.56	18.32	34.0	7649	51486	51486
4845	23.86	16.29	29.3	7897	54271	54271
4915	25.19	15.66	27.8	7974	55283	55283
5780	28.23	16.43	24.8	7879	55940	55940
5780	30.35	15.28	23.1	8018	57593	57593
5780	33.63	13.79	20.8	8200	60009	60009
5785	35.02	13.26	20.0	8266	60981	60981
5785	38.81	11.96	18.0	8423	63514	63514
5785	42.30	10.97	16.6	8543	65000	65000
5780	47.53	9.76	14.7	8690	65000	65000
6835	50.56	10.85	13.8	8761	65000	65000
6835	54.64	10.04	12.8	8844	65000	65000
6835	57.27	9.58	12.2	8891	65000	65000
6835	60.92	9.00	11.5	8950	65000	65000
6835	63.47	8.64	11.0	8987	65000	65000
6835	71.15	7.71	9.8	9083	65000	65000
6835	77.22	7.10	9.1	9145	65000	65000
6835	83.89	6.54	8.3	9203	65000	65000
6835	87.65	6.26	8.0	9232	65000	65000
6835	93.05	5.89	7.5	9269	65000	65000

5.6 IB/IBA GEAR REDUCER - 700 RPM

IB153

Mn_2 [Nm]	i	Pn_1 [kW]	n2 [rpm]	Fr1 [N]	Fr2 D-S-P [N]	Fr2 C [N]
6835	103.12	5.32	6.8	9329	65000	65000
6835	123.88	4.43	5.7	9420	65000	65000
6835	134.27	4.08	5.2	9455	65000	65000
6835	149.26	3.67	4.7	9497	65000	65000
6835	165.42	3.32	4.2	9534	65000	65000

IB163

Mn_2 [Nm]	i	Pn_1 [kW]	n2 [rpm]	Fr1 [N]	Fr2 D-S-P [N]	Fr2 C [N]
4915	8.89	44.35	78.7	6870	60316	60316
5715	10.58	43.36	66.2	6950	62569	62569
5565	11.87	37.62	59.0	7393	65940	65000
6360	12.81	39.84	54.6	7221	65940	65000
6940	14.08	39.54	49.7	7245	67071	65000
7230	15.52	37.38	45.1	7413	69097	65000
7160	16.39	35.06	42.7	7594	70864	65000
7520	18.02	33.49	38.9	7715	72773	65000
7735	19.96	31.10	35.1	7901	75377	65000
7515	21.94	27.48	31.9	8181	78965	65000
7590	24.17	25.19	29.0	8360	80000	65000
8025	26.58	24.23	26.3	8435	80000	65000
7375	28.80	20.55	24.3	8721	80000	65000
8315	30.92	21.58	22.6	8641	80000	65000
8600	34.25	20.15	20.4	8752	80000	65000
8890	37.66	18.94	18.6	8846	80000	65000
9180	40.65	18.12	17.2	8909	80000	65000
8675	45.09	15.44	15.5	9118	80000	65000
11110	51.00	17.48	13.7	9169	80000	65000
11110	53.63	16.62	13.1	9225	80000	65000
11110	58.97	15.12	11.9	9324	80000	65000
11110	69.78	12.78	10.0	9478	80000	65000
11110	76.72	11.62	9.1	9554	80000	65000
11110	87.54	10.18	8.0	9648	80000	65000
11110	96.25	9.26	7.3	9709	80000	65000
11110	103.93	8.58	6.7	9754	80000	65000
11110	114.27	7.80	6.1	9805	80000	65000
11110	126.29	7.06	5.5	9854	80000	65000
11110	138.85	6.42	5.0	9896	80000	65000
11110	154.83	5.76	4.5	9939	80000	65000

5.7 IB/IBA GEAR REDUCER - 500 RPM

IBA42

Mn_2 [Nm]	i	Pn_1 [kW]	n2 [rpm]	Fr1 [N]	Fr2 D-S-P [N]	Fr2 C [N]
77	7.62	0.55	65.7	373	-	2557
77	10.62	0.39	47.1	355	-	2857
77	12.95	0.32	38.6	406	-	3052
77	14.46	0.29	34.6	443	-	3166
102	16.47	0.33	30.4	579	-	3307
103	22.97	0.24	21.8	355	-	3695
102	28.00	0.20	17.9	406	-	3946
102	31.27	0.18	16.0	443	-	4000
103	33.78	0.16	14.8	458	-	4000
102	47.12	0.12	10.6	355	-	4000
102	57.43	0.10	8.7	406	-	4000
92	64.13	0.08	7.8	406	-	4000
95	78.17	0.07	6.4	406	-	4000

IBA52

Mn_2 [Nm]	i	Pn_1 [kW]	n2 [rpm]	Fr1 [N]	Fr2 D-S-P [N]	Fr2 C [N]
137	7.91	0.94	63.2	373	-	2775
137	9.46	0.78	52.9	414	-	2945
136	11.57	0.63	43.2	405	-	3150
137	14.63	0.51	34.2	392	-	3405
171	17.11	0.54	29.2	529	-	3588
171	20.46	0.45	24.4	414	-	3809
170	25.03	0.37	20.0	405	-	4000
172	31.63	0.29	15.8	392	-	4000
171	35.10	0.26	14.2	446	-	4000
172	41.97	0.22	11.9	414	-	4000
188	51.34	0.20	9.7	445	-	4000
172	64.87	0.14	7.7	356	-	4000
171	79.07	0.12	6.3	406	-	4000

IBA53

Mn_2 [Nm]	i	Pn_1 [kW]	n2 [rpm]	Fr1 [N]	Fr2 D-S-P [N]	Fr2 C [N]
189	73.70	0.15	6.8	472	-	4000
186	93.33	0.11	5.4	472	-	4000
187	111.61	0.10	4.5	472	-	4000
186	136.53	0.08	3.7	472	-	4000
190	172.53	0.06	2.9	472	-	4000
186	197.11	0.05	2.5	472	-	4000
183	249.08	0.04	2.0	472	-	4000
185	271.16	0.04	1.8	472	-	4000
180	342.65	0.03	1.5	472	-	4000

5.7 IB/IBA GEAR REDUCER - 500 RPM

IBA72

Mn_2 [Nm]	i	Pn_1 [kW]	n2 [rpm]	Fr1 [N]	Fr2 D-S-P [N]	Fr2 C [N]
298	8.36	1.93	59.8	664	7159	3579
298	10.06	1.60	49.7	685	7615	3808
298	12.44	1.29	40.2	667	8174	4087
358	14.91	1.30	33.5	826	8682	4341
358	17.94	1.08	27.9	685	9235	4618
358	22.19	0.87	22.5	667	9913	4957
358	27.45	0.70	18.2	667	10000	5321
358	33.04	0.59	15.1	685	10000	5500
340	40.87	0.45	12.2	635	10000	5500
298	45.64	0.35	10.9	646	10000	5500
298	54.94	0.29	9.1	685	10000	5500
296	67.96	0.24	7.4	667	10000	5500

IBA73

Mn_2 [Nm]	i	Pn_1 [kW]	n2 [rpm]	Fr1 [N]	Fr2 D-S-P [N]	Fr2 C [N]
384	43.89	0.50	11.4	330	10000	5500
384	52.83	0.41	9.5	411	10000	5500
382	65.35	0.33	7.7	400	10000	5500
384	80.83	0.27	6.2	400	10000	5500
382	97.29	0.22	5.1	411	10000	5500
384	120.34	0.18	4.2	400	10000	5500
384	149.73	0.15	3.3	398	10000	5500
386	180.23	0.12	2.8	411	10000	5500
384	222.93	0.10	2.2	400	10000	5500
382	260.20	0.08	1.9	424	10000	5500
388	321.85	0.07	1.6	400	10000	5500
374	357.95	0.06	1.4	445	10000	5500
394	442.76	0.05	1.1	400	10000	5500

IB063

Mn_2 [Nm]	i	Pn_1 [kW]	n2 [rpm]	Fr1 [N]	Fr2 D-S-P [N]	Fr2 C [N]
208	5.71	2.08	87.5	248	10312	2946
244	6.88	2.02	72.7	273	10809	3088
252	7.32	1.96	68.3	303	11020	3149
332	9.16	2.07	54.6	258	11462	3275
374	10.26	2.08	48.7	250	11694	3341
390	11.03	2.02	45.3	281	11938	3411
418	12.35	1.93	40.5	319	12000	3514
426	13.15	1.85	38.0	358	12000	3590
426	15.18	1.60	33.0	469	12000	3804
432	17.00	1.45	29.4	535	12000	3966

5.7 IB/IBA GEAR REDUCER - 500 RPM

IB063

Mn_2 [Nm]	i	Pn_1 [kW]	n2 [rpm]	Fr1 [N]	Fr2 D-S-P [N]	Fr2 C [N]
432	22.39	1.10	22.3	693	12000	4423
432	26.09	0.94	19.2	764	12000	4695
432	28.03	0.88	17.8	793	12000	4827
432	33.43	0.74	15.0	858	12000	5166
432	38.58	0.64	13.0	902	12000	5456
432	43.22	0.57	11.6	933	12000	5696
510	50.81	0.57	9.8	972	12000	6054
510	56.93	0.51	8.8	995	12000	6317
510	69.16	0.42	7.2	1030	12000	6792
510	77.48	0.38	6.5	1047	12000	7083
510	90.33	0.32	5.5	1068	12000	7494
510	101.20	0.29	4.9	1081	12000	7812
510	111.74	0.26	4.5	1091	12000	8000
510	124.20	0.23	4.0	1101	12000	8000
510	139.15	0.21	3.6	1111	12000	8000
510	157.42	0.18	3.2	1120	12000	8000

IB083

Mn_2 [Nm]	i	Pn_1 [kW]	n2 [rpm]	Fr1 [N]	Fr2 D-S-P [N]	Fr2 C [N]
360	7.81	2.63	64.0	1587	17494	4998
432	8.62	2.86	58.0	1464	17713	5061
468	10.49	2.54	47.6	1633	18000	5387
540	11.59	2.66	43.1	1571	18000	5469
585	14.43	2.31	34.6	1761	18000	5875
610	16.60	2.10	30.1	1869	18000	6150
610	18.32	1.90	27.3	1976	18000	6390
610	22.82	1.52	21.9	2177	18000	6949
610	26.71	1.30	18.7	2297	18000	7376
610	29.50	1.18	16.9	2364	18000	7657
610	31.80	1.09	15.7	2410	18000	7875
610	34.49	1.01	14.5	2456	18000	8118
610	39.60	0.88	12.6	2500	18000	8546
610	42.95	0.81	11.6	2500	18000	8807
610	45.44	0.77	11.0	2500	18000	8992
725	51.19	0.81	9.8	2500	18000	9395
725	55.52	0.74	9.0	2500	18000	9679
725	59.96	0.69	8.3	2500	18000	9955
725	63.74	0.65	7.8	2500	18000	10179
725	69.14	0.60	7.2	2500	18000	10485
725	73.14	0.57	6.8	2500	18000	10701
725	80.76	0.51	6.2	2500	18000	11092
725	92.19	0.45	5.4	2500	18000	11634
725	100.57	0.41	5.0	2500	18000	12000

5.7 IB/IBA GEAR REDUCER - 500 RPM

IB083

Mn_2 [Nm]	i	Pn_1 [kW]	n2 [rpm]	Fr1 [N]	Fr2 D-S-P [N]	Fr2 C [N]
725	105.29	0.39	4.8	2500	18000	12000
725	116.25	0.36	4.3	2500	18000	12000
725	126.76	0.33	3.9	2500	18000	12000
725	144.77	0.29	3.5	2500	18000	12000

IB103

Mn_2 [Nm]	i	Pn_1 [kW]	n2 [rpm]	Fr1 [N]	Fr2 D-S-P [N]	Fr2 C [N]
1010	17.27	3.34	28.9	1296	22000	7600
1010	19.06	3.02	26.2	1454	22000	7891
1010	23.70	2.43	21.1	1753	22000	8572
1080	26.51	2.32	18.9	1805	22000	8854
1155	30.55	2.16	16.4	1893	22000	9254
1225	33.07	2.11	15.1	1912	22000	9447
1225	35.87	1.95	13.9	1996	22000	9745
1225	41.12	1.70	12.2	2122	22000	10264
1225	44.61	1.57	11.2	2189	22000	10584
1225	47.28	1.48	10.6	2234	22000	10819
1450	50.24	1.65	9.9	2278	22000	11068
1450	53.02	1.56	9.4	2315	22000	11293
1450	58.50	1.41	8.6	2377	22000	11715
1450	64.89	1.27	7.7	2436	22000	12175
1450	68.58	1.21	7.3	2466	22000	12427
1450	72.76	1.14	6.9	2495	22000	12701
1450	78.92	1.05	6.3	2533	22000	13088
1535	83.66	1.05	6.0	2534	22000	13283
1535	92.31	0.95	5.4	2576	22000	13773
1535	105.44	0.83	4.7	2626	22000	14463
1535	114.80	0.76	4.4	2655	22000	14920
1535	120.42	0.73	4.2	2670	22000	15000
1535	132.87	0.66	3.8	2699	22000	15000
1535	144.69	0.61	3.5	2722	22000	15000
1535	165.25	0.53	3.0	2754	22000	15000

IB123

Mn_2 [Nm]	i	Pn_1 [kW]	n2 [rpm]	Fr1 [N]	Fr2 D-S-P [N]	Fr2 C [N]
1085	7.97	7.77	62.8	2453	26584	7595
1300	9.62	7.71	52.0	2462	27285	7796
1445	10.33	7.97	48.4	2410	27163	7761
1445	12.48	6.60	40.1	2683	29542	8441
1515	13.84	6.24	36.1	2754	30000	8692
1515	15.38	5.62	32.5	2878	30000	9104

5.7 IB/IBA GEAR REDUCER - 500 RPM

IB123

Mn_2 [Nm]	i	Pn_1 [kW]	n2 [rpm]	Fr1 [N]	Fr2 D-S-P [N]	Fr2 C [N]
1590	18.58	4.88	26.9	3027	30000	9738
1805	20.61	5.00	24.3	3004	30000	9762
2020	22.78	5.06	21.9	2990	30000	9786
2020	25.89	4.45	19.3	3112	30000	10378
2020	27.51	4.19	18.2	3164	30000	10668
2020	30.79	3.74	16.2	3253	30000	11223
2020	31.26	3.68	16.0	3265	30000	11299
2020	34.68	3.32	14.4	3337	30000	11830
2020	40.53	2.84	12.3	3433	30000	12663
2165	44.89	2.75	11.1	3452	30000	12950
2310	49.80	2.65	10.0	3473	30000	13267
2730	54.30	2.87	9.2	3517	30000	13782
2730	59.36	2.62	8.4	3558	30000	14327
2820	62.59	2.57	8.0	3568	30000	14518
2815	69.43	2.31	7.2	3610	30000	15187
2990	74.42	2.29	6.7	3614	30000	15364
2990	80.04	2.13	6.2	3642	30000	15858
2990	89.87	1.90	5.6	3681	30000	16668
2990	99.70	1.71	5.0	3712	30000	17421
2990	106.65	1.60	4.7	3731	30000	17925
2990	119.60	1.43	4.2	3761	30000	18805
2990	129.96	1.31	3.9	3780	30000	19466
2990	144.43	1.18	3.5	3802	30000	20000
2990	160.23	1.06	3.1	3822	30000	20000
2990	180.40	0.95	2.8	3842	30000	20000

IB143

Mn_2 [Nm]	i	Pn_1 [kW]	n2 [rpm]	Fr1 [N]	Fr2 D-S-P [N]	Fr2 C [N]
2165	10.84	11.39	46.1	2171	24968	24968
2240	11.87	10.76	42.1	2274	25696	25696
2240	14.49	8.82	34.5	2587	28165	28165
2310	17.04	7.73	29.3	2760	29959	29959
2600	18.66	7.95	26.8	2726	29831	29831
2890	21.00	7.85	23.8	2742	30135	30135
3180	22.77	7.96	22.0	2724	29954	29954
3325	25.63	7.40	19.5	2815	31059	31059
3325	27.44	6.91	18.2	2894	32128	32128
3395	30.05	6.44	16.6	2968	33240	33240
3395	33.01	5.87	15.2	3060	34796	34796
3470	36.67	5.40	13.6	3137	36252	36252
3470	40.29	4.91	12.4	3214	37914	37914
3470	44.16	4.48	11.3	3283	39586	39586
3615	48.35	4.26	10.3	3318	40000	40000

5.7 IB/IBA GEAR REDUCER - 500 RPM

IB143

Mn_2 [Nm]	i	Pn_1 [kW]	n2 [rpm]	Fr1 [N]	Fr2 D-S-P [N]	Fr2 C [N]
4270	53.16	4.58	9.4	3380	40000	40000
4270	54.63	4.46	9.2	3397	40000	40000
4270	59.02	4.13	8.5	3442	40000	40000
4270	64.88	3.75	7.7	3493	40000	40000
4270	70.43	3.46	7.1	3533	40000	40000
4270	77.12	3.16	6.5	3573	40000	40000
4270	85.54	2.85	5.8	3616	40000	40000
4270	94.13	2.59	5.3	3651	40000	40000
4270	105.83	2.30	4.7	3690	40000	40000
4270	111.94	2.18	4.5	3707	40000	40000
4270	124.62	1.95	4.0	3737	40000	40000
4270	136.44	1.78	3.7	3760	40000	40000
4270	149.59	1.63	3.3	3781	40000	40000
4270	166.53	1.46	3.0	3804	40000	40000
4270	187.24	1.30	2.7	3826	40000	40000

IB153

Mn_2 [Nm]	i	Pn_1 [kW]	n2 [rpm]	Fr1 [N]	Fr2 D-S-P [N]	Fr2 C [N]
3250	10.49	17.67	47.6	6819	48046	48046
3250	12.64	14.66	39.5	7339	51544	51544
3615	14.01	14.72	35.7	7332	52779	52779
3615	15.40	13.39	32.5	7561	54701	54701
4335	18.56	13.32	26.9	7571	57095	57095
4695	20.56	13.02	24.3	7623	58602	58602
4845	23.86	11.58	21.0	7874	61748	61748
4915	25.19	11.13	19.9	7951	62895	62895
5780	28.23	11.68	17.7	7856	63827	63827
5780	30.35	10.86	16.5	7997	65000	65000
5780	33.63	9.80	14.9	8180	65000	65000
5785	35.02	9.42	14.3	8247	65000	65000
5785	38.81	8.50	12.9	8406	65000	65000
5785	42.30	7.80	11.8	8527	65000	65000
5780	47.53	6.94	10.5	8676	65000	65000
6835	50.56	7.71	9.9	8748	65000	65000
6835	54.64	7.13	9.2	8832	65000	65000
6835	57.27	6.81	8.7	8880	65000	65000
6835	60.92	6.40	8.2	8939	65000	65000
6835	63.47	6.14	7.9	8977	65000	65000
6835	71.15	5.48	7.0	9074	65000	65000
6835	77.22	5.05	6.5	9137	65000	65000
6835	83.89	4.65	6.0	9195	65000	65000
6835	87.65	4.45	5.7	9225	65000	65000
6835	93.05	4.19	5.4	9262	65000	65000

5.7 IB/IBA GEAR REDUCER - 500 RPM

IB153

Mn_2 [Nm]	i	Pn_1 [kW]	n2 [rpm]	Fr1 [N]	Fr2 D-S-P [N]	Fr2 C [N]
6835	103.12	3.78	4.8	9322	65000	65000
6835	123.88	3.15	4.0	9415	65000	65000
6835	134.27	2.90	3.7	9450	65000	65000
6835	149.26	2.61	3.4	9493	65000	65000
6835	165.42	2.36	3.0	9530	65000	65000

IB163

Mn_2 [Nm]	i	Pn_1 [kW]	n2 [rpm]	Fr1 [N]	Fr2 D-S-P [N]	Fr2 C [N]
4915	8.89	31.53	56.2	6830	68733	65000
5715	10.58	30.82	47.3	6910	71467	65000
5565	11.87	26.74	42.1	7359	75194	65000
6360	12.81	28.32	39.0	7184	75410	65000
6940	14.08	28.10	35.5	7209	76831	65000
7230	15.52	26.57	32.2	7379	79173	65000
7160	16.39	24.92	30.5	7562	80000	65000
7520	18.02	23.81	27.8	7685	80000	65000
7735	19.96	22.11	25.1	7872	80000	65000
7515	21.94	19.53	22.8	8156	80000	65000
7590	24.17	17.91	20.7	8337	80000	65000
8025	26.58	17.22	18.8	8413	80000	65000
7375	28.80	14.60	17.4	8702	80000	65000
8315	30.92	15.34	16.2	8622	80000	65000
8600	34.25	14.32	14.6	8733	80000	65000
8890	37.66	13.46	13.3	8828	80000	65000
9180	40.65	12.88	12.3	8893	80000	65000
8675	45.09	10.97	11.1	9104	80000	65000
11110	51.00	12.42	9.8	9155	80000	65000
11110	53.63	11.82	9.3	9212	80000	65000
11110	58.97	10.75	8.5	9312	80000	65000
11110	69.78	9.08	7.2	9468	80000	65000
11110	76.72	8.26	6.5	9545	80000	65000
11110	87.54	7.24	5.7	9641	80000	65000
11110	96.25	6.58	5.2	9702	80000	65000
11110	103.93	6.10	4.8	9747	80000	65000
11110	114.27	5.54	4.4	9799	80000	65000
11110	126.29	5.02	4.0	9848	80000	65000
11110	138.85	4.56	3.6	9891	80000	65000
11110	154.83	4.09	3.2	9935	80000	65000

6.1 SALES CONDITIONS

All supplies effected by Motovario are governed exclusively by the general terms of sale that you can find on our website:

http://www.motovario.com/eng/corporate/sales-conditions