CATÁLOGO TÉCNICO

S SERIES

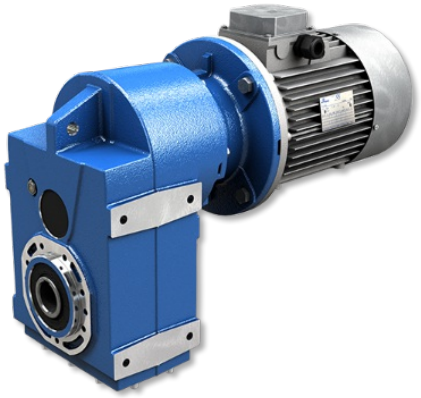

MOTORREDUCTORES **PENDULARES**

STANDARD **IEC**

MOTOVARIO®
HEART OF MOTION
a TECO Group company

ÍNDICE

1. INFORMACIÓN GENERAL

1.1 SIMBOLOGÍA Y FÓRMULAS 5
1.1.1 Simbología 5
1.1.2 Fórmulas 6
1.2 SELECCIÓN DEL PRODUCTO 7
1.3 FACTOR DE SERVICIO 8
1.4 INSTALACIÓN 9

2. INFORMACIÓN DEL PRODUCTO

2.1 CARACTERISTICAS DE CONSTRUCCIÓN 10
2.2 TIPOLOGÍA 11
2.2.1 Designación 11
2.2.2 Versiones 12
2.2.3 Modularidad 13
2.3 POSICIONES DE MONTAJE 14
2.3.1 Posiciones de montaje 14
2.3.2 Posición caja de bornes 14
2.4 POTENCIA TÉRMICA 15
2.4.1 Información 15
2.4.2 Controlar 15
2.5 APLICACIONES CRÍTICAS 16
2.5.1 Aplicaciones críticas 16
2.5.2 Información 16
2.6 PREDISPOSICIÓN 17
2.7 RODAMIENTOS 21
2.8 CARGAS RADIALES 22
2.8.1 Información 22
2.8.2 Entrada 22
2.8.3 Salida 23
2.9 LUBRICACIÓN 24
2.9.1 Información 24
2.9.2 Lubricantes 24
2.9.3 Lubricantes especiales 25

ÍNDICE

2.9.4 Cantidad 26

2.10 MOMENTOS DE INERCIA 27

3. DIMENSIONES

3.1 REDUCTORES/MOTORREDUCTORES 28

3.1.1 S 052...123 28

3.1.2 S 142...153 29

3.1.3 CS 052...123 30

3.1.4 IS 052...123 31

3.1.5 IS 142...153 32

3.2 MOTORES ELÉCTRICOS 33

3.2.1 Motores eléctricos 33

3.2.2 Motores de eficiencia estándar (TS), alta (TH) y premium (TP) 35

3.2.3 Potencia nominal - [kW] 36

3.3 PESO 37

3.4 EXTREMIDAD DEL EJE 38

4. ACCESORIOS Y OPCIONES

4.1 EJES LENTOS 39

4.2 BRIDA DE SALIDA 40

4.3 SISTEMAS DE FIJACIÓN PENDULAR 41

4.3.1 Perno de reacción 41

4.3.2 Brazo de reacción - S 142...153 41

4.4 DISPOSITIVO ANTIRRETORNO 42

4.5 ARO DE APRIETE 43

4.6 RETENES REFORZADOS 44

4.7 KIT DE MONTAJE/DESMONTAJE 45

5. INFORMACIÓN DE PRESTACIONES

5.1 S MOTORREDUCTORES (50Hz) 46

5.2 IS REDUCTOR - 1750 RPM 177

5.3 IS REDUCTOR - 1400 RPM 185

5.4 IS REDUCTOR - 1140 RPM 193

5.5 IS REDUCTOR - 900 RPM 201

5.6 IS REDUCTOR - 700 RPM 209

5.7 IS REDUCTOR - 500 RPM 217

6. CONDICIONES DE VENTA

6.1 CONDICIONES DE VENTA 225

1.1 SIMBOLOGÍA Y FÓRMULAS

1.1.1 Simbología

Dimensión física	Símbolo	Unidades de medida de símbolos	Entrada	Salida
Potencia	P	[kW]	P_1	P_2
Potencia requerida	Pr	[kW]	Pr_1	Pr_2
Potencia nominal	Pn	[kW]	Pn_1	Pn_2
Momento torsor	M	[Nm]	M_1	M_2
Par nominal	Mn	[Nm]		Mn_2
Par requerido	Mr	[Nm]	Mr_1	Mr_2
Número de revoluciones	n	[rpm]	n_1	n_2
Fuerza	F	[N]		
Carga radial	Fr	[N]	Fr_1	Fr_2
Carga axial	Fa	[N]	Fa_1	Fa_2
Relación de reducción	i			
Rendimiento dinámico	η_d			
Factor de servicio	f.s.			
Estático	s			
Dinámico	d			
Calculado	c			
Máximo	max			
Mínimo	min			
Momentos de inercia	J	[kgm^2]	J_1	
Temperatura ambiente	T_{amb}	[°C]		
Dimensiones		[mm]		

1.1 SIMBOLOGÍA Y FÓRMULAS

1.1.2 Fórmulas

REDUCTOR		
Tiempo de arranque o de parada	$t= v / a$	[s]
Velocidad de rotación	$v= \pi * d * n / 60$ $v= \omega * r$	[m/s]
Velocidad angular	$n= 60 * v / (\pi * d)$ $\omega= v / r$	[rpm] [rad/s]
Aceleración o deceleración	$a= v / t$	[m/s^2]
Aceleración angular	$\alpha= n / (9,55 * t)$ $\alpha= \omega / t$	[rad/s^2]
Espacio (en función de una aceleración o de una velocidad inicial o final)	$s= a * t^2 / 2$ $s= v * t /2$	[m]
Fuerza de traslación sobre plano horizontal	$F= \mu * m * g$	[N]
Fuerza de traslación sobre plano vertical (elevación)	$F= m * g$	
Fuerza de traslación sobre plano inclinado	$F= m * g (\mu * \cos\beta + \operatorname{sen}\beta)$	
m= masa [kg]; g= aceleración gravitatoria [m/s^2]; μ= coeficiente di fricción; β= ángulo de inclinación		
Momento de inercia	$J= m * v^2 / \omega^2$	[kgm^2]
Par	$M= F * d / 2$ $M= J * \omega / t$	[Nm]

MOTOR y MOTORREDUCTOR		
Tiempo de aceleración	$ta= (Jext+Jm)*n_n/9,55+(M_{peak}-Mr)$	[s]
Tiempo de frenado	$ts= (Jext+Jm)*n_n/9,55+(M_{peak}+Mr)$	[s]
Ángulo de rotación del motor en aceleración	$\varphi= n_n * ta / 19,1$	[rad]
Ángulo de rotación del motor en frenada	$\varphi= n_n * ts / 19,1$	[rad]
Potencia disponible en el eje de un motor monofásico	$P= V * I * \eta * \cos\omega$	[W]
Potencia disponible en el eje de un motor trifásico	$P= 1,73 * V * I * \eta * \cos\omega$	[W]

FUNCIONAMIENTO a 60Hz		
Velocidad angular a 60Hz	$n_{60Hz}= 1,2 * n_{50Hz}$	[rpm]
Potencia a 60Hz	$P1_{60Hz}= P1_{50Hz} * V_{60Hz}/V_{50Hz}$	[kW]
Si la tensión de alimentación V_{60Hz} es igual a la del bobinado V_{50Hz}, la potenza no varía $P1_{60Hz}= P1_{50Hz}$ Si la tensión de alimentazión V_{60Hz} es mayor del 20% de la del bobinado V_{50Hz}, la potencia aumenta un 20% $P1_{60Hz}= 1,2\ P1_{50Hz}$		
Par a 60Hz	$M_{60hz}= M_{50Hz} * P1_{60Hz} / (1,2 * P1_{50Hz})$	[Nm]
Factor de servicio a 60Hz	$f.s_{60Hz}= f.s_{50Hz} * 1,175 * P1_{50Hz} / P1_{60Hz}$	-

1.2 SELECCIÓN DEL PRODUCTO

Para la correcta selección de un reductor o de un motorreductor es necesario disponer de algunos datos fundamentales como:

A. La velocidad angular a la entrada del reductor **(n_1)** y la velocidad angular a la salida **(n_2)**. Através de estos dos valores es posible calcular la relación de reducción (i) del reductor utilizando la fórmula: **$i=n_1/n_2$**

B. El momento de torsión requerido por la aplicación **(Mr_2)**.

Conocidos estos datos, se puede proceder a la selección del motorreductor o del reductor.
Esta guía conduce a la selección del producto mediante pocos pasos:

Selección de los motorreductores

1. Determinar el factor de servicio efectivo de la aplicación **(f.s.)**. Este parámetro es función del tipo de carga de la máquina accionada, del número de accionamientos por hora y de la cantidad de horas de funcionamiento (ver el párrafo "Factor de servicio").
2. Obtener la potencia a la entrada **Pr_1** utilizando el momento de torsión requerido **Mr_2**, la velocidad **n_2** y el rendimiento dinámico. **$Pr_1=(Mr_2*n_2)/(9550*\eta_d)$**. El valor del rendimiento dinámico depende del tipo de reductor y del número de etapas de engranajes de reducción. (Para obtener el valor del rendimiento).
3. Consultar las tablas de las prestaciones de los motorreductores buscando una potencia normalizada **Pn_1** superior a la requerida **Pr_1** tal que: **$Pn_1 \geq Pr_1$**
4. Una vez identificada la potencia nominal adecuada, seleccionar el motorreductor capaz de desarrollar la velocidad angular más cercana a la n_2 deseada y con un factor de servicio f.s. mayor o igual que el necesario para la aplicación.

En las tablas de selección de los motorreductores, las combinaciones se realizan con motores de 2,4,6 polos alimentados con 50Hz.

Selección de los reductores

1. Determinar el factor de servicio de la aplicación **(f.s.)** (ver el párrafo "Factor de servicio").
2. Calcular la relación de reducción i entre la velocidad de salida n_2 requerida y la de entrada **n1**. **$i=n_1/n_2$**
3. Calcular el momento de torsión Mc_2 para seleccionar el reductor a través del par necesario para la apalicación Mr_2 y factor de servicio f.s.: **$Mc_2=Mr_2*(f.s.)$**
4. Consultar las tablas de Prestaciones de los Reductores buscando el reductor que, con la relación de reducción más cercana a la calculada, cuente con un par nominal**Mn_2** tal que: **$Mn_2 \geq Mc_2$**

Verificaciones

Una vez realizada la selección del reductor o del motorreductor es conveniente efectuar las siguientes verificaciones:

A. **Potencia Térmica**

La potencia térmica del reductor debe ser mayor o igual que la potencia mecánica instalada o que la potencia requerida por la aplicación según las indicaciones contenidas en la sección (ver el párrafo "Potencia térmica").

B. **Par Máximo**

Generalmente el par máximo (pico de carga instantáneo) que se puede aplicar al reductor no debe superar el 200% del par nominal **Mn_2** (ATEX - M_2max).

C. **Cargas Radiales**

1. Verificar que las cargas radiales que actúan sobre los árboles de entrada y/o de salida respeten los valores admitidos según el catálogo. Si son mayores, aumentar el tamaño del reductor o modificar la capacidad de soportar la carga externa. En la fase de verificación, es necesario tener en cuenta que los valores indicados en el catálogo se refieren a cargas que actúan sobre la línea media de la parte saliente del árbol por lo que, cuando la carga esté aplicada en una posición diferente, es necesario determinar la carga admisible en la posición deseada con las fórmulas correspondientes (ver el párrafo "Cargas Radiales").
2. En caso de ejes accesorios en salida, controlar que la carga aplicada sea compatible con el tamaño del eje. En caso de necesidad, contactar la ASISTENCIA TÉCNICA MOTOVARIO.

D. Si el reductor seleccionado se combina con un motor eléctrico, verificar su aplicabilidad consultando la tabla de predisposiciones (ver párrafo "Predisposiciones"). Para motores de dimensiones mayor a IEC 180, verificar la necesidad de soportar el motor con las patas, En caso de necesidad contactar con la ASISTENCIA TÉCNICA MOTOVARIO.

1.3 FACTOR DE SERVICIO

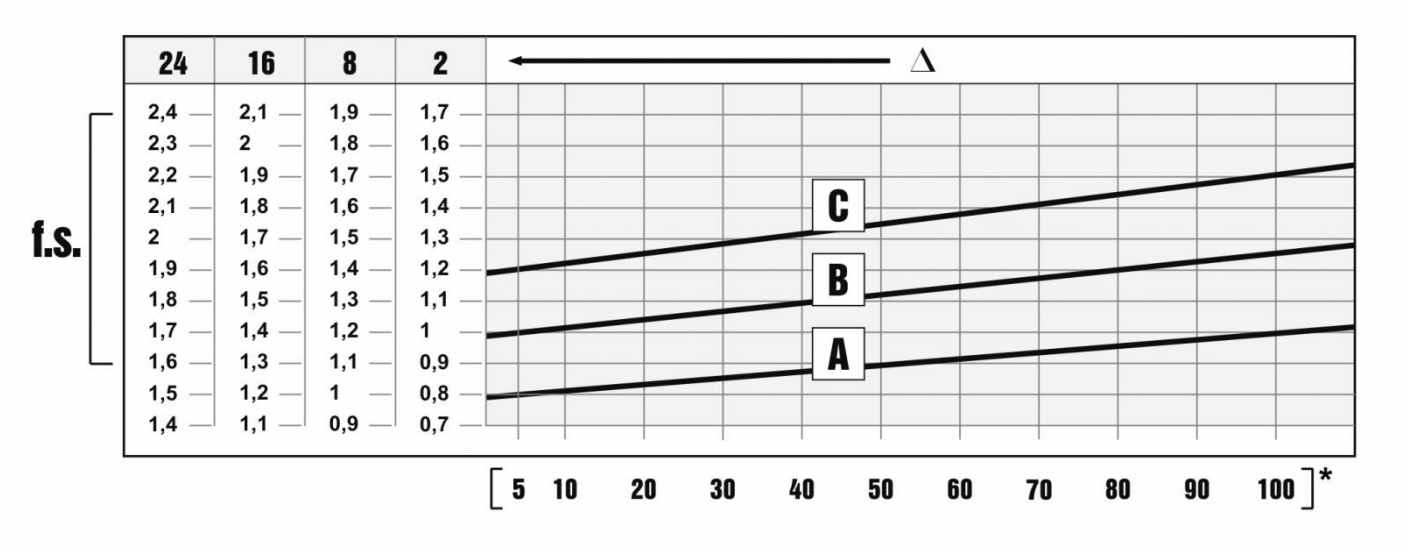

El factor de servicio f.s. depende de las condiciones de funcionamiento a las cuales está sometido el reductor.
Los parámetros que deben ser considerados para una correcta selección del factor de servicio son:

- tipo de carga de la máquina accionada: A - B - C
- duración de funcionamiento diario: horas/día (Δ)
- frecuencia de arranques: arr/hora (*)

CARGA:

- **A** - uniforme = fa ≤ 0,3
- **B** - sobrecarga media = fa ≤ 3
- **C** - sobrecarga fuerte = fa ≤ 10

fa = Je/Jm

- Je [kgm$^{2]}$ inercia externa reducida al eje motor
- Jm [kgm$^{2]}$ inercia motor

En caso de fa > 10, ponerse en contacto con nuestro Servicio Técnico.

A. Tornillos de Arquímedes para materiales ligeros, ventiladores, líneas de montaje, cintas transportadoras para materiales ligeros, pequeños agitadores, elevadores, máquinas limpiadoras, máquinas llenadoras, máquinas comprobadoras, cintas trasportadoras.
B. Dispositivos de enrollado, alimentadores de las máquinas para la madera, montacargas, equilibradores, roscadoras, agitadores medios y mezcladores, cintas transportadoras para materiales pesados, cabrestantes, puertas corredizas, raspadores de abono, máquinas empaquetadoras, hormigoneras, mecanismos para el movimiento de las grúas, fresadoras, plegadoras, bombas de engranajes.
C. Agitadores para materiales pesados, cizallas, prensas, centrifugadoras, soportes rotativos, cabrestantes y elevadores para materiales pesados, tornos para la rectificación, molinos de piedras, elevadores de cangilones, perforadoras, moledores a percusión, prensas de excéntrica, plegadoras, mesas giratorias, pulidoras, vibradores, cortadoras.

1.4 INSTALACIÓN

Para la instalación del reductor, atenerse a las siguientes indicaciones:

- Para evitar las vibraciones, la fijación sobre la máquina tiene que ser estable.
- Antes del montaje del grupo sobre la máquina, controlar que el sentido de rotación del eje de salida del reductor sea correcto.
- En caso de periodos de almacenamiento muy largos (4/6 meses), si el retén no está sumergido en el lubricante contenido en el grupo, se aconseja su reemplazo porque la goma podría estar pegada al eje o haber perdido las características de elasticidad necesarias para un funcionamiento correcto.
- Siempre que sea posible, proteger el reductor contra los rayos del sol y la intemperie.
- Controlar que la refrigeración del motor sea suficiente, asegurando una correcta transferencia de aire del lado ventilador.
- En caso de temperatura ambiente de < -5°C o > +40°C, ponerse en contacto con el Servicio técnico.
- El montaje de distintos órganos (poleas, ruedas dentadas, acoplamientos, ejes, etc.) sobre los ejes debe ser efectuado utilizando los agujeros roscados correspondientes u otros sistemas, asegurando una manipulación correcta sin correr el riesgo de dañar los cojinetes o las partes externas de los grupos.
- Lubricar las superficies en contacto para evitar gripajes u oxidaciones.
- La pintura no debe cubrir las partes de goma y los agujeros de los posibles tapones respiraderos.
- Para los grupos equipados de tapones de aceite, reemplazar el tapón cerrado, utilizado durante el transporte, por el tapón respiradero.
- Controlar el correcto nivel de lubricante mediante la mirilla (si la hay).
- La puesta en marcha se debe producir de manera gradual evitando la aplicación súbita de la carga máxima.
- Si bajo el reductor hay mecanismos, cosas ó materiales que puedan dañarse por una eventual pérdida de aceite, deberá preverse una protección adecuada.

Montaje motor en bridas pam

Si el equipo se suministra sin motor es preciso observar las siguientes recomendaciones para garantizar un correcto montaje del motor eléctrico.Verificar que la tolerancia del eje y de la brida motor se correspondan al menos a una clase de calidad “normal”. Limpiar cuidadosamente el eje, el centraje y el plano de asiento de restos de pintura o suciedad. Proceder al montaje del semiacoplamiento/manguito en el eje del motor eléctrico sin excesiva fuerza, si no entra con suavidad verificar la correcta tolerancia de la chaveta del motor (ver imagen), utilizar en cualquier caso métodos de montaje que no dañen los rodamientos del motor. Proceder a continuación al montaje del motor con el semiacoplamiento en el reductor, evitando la interferencia de los dientes del acoplamiento. No se prevé ninguna adaptación de la chaveta del motor.

Acoplamento elástico

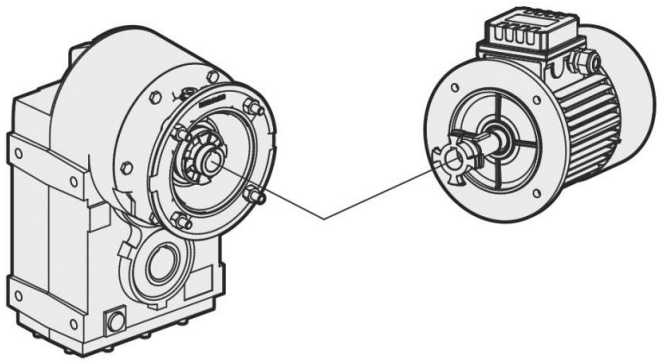

Manguito PAM

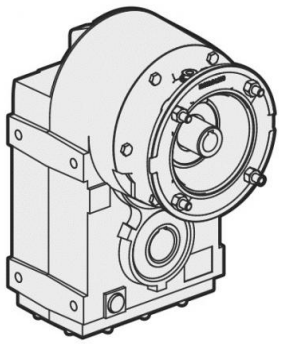

2.1 CARACTERISTICAS DE CONSTRUCCIÓN

Los productos Motovario se entregan con el siguiente acabado superficial.

Unidades con cajas de fundición gris:
- Las cajas se pintan siempre.

Especificaciones pintura:
- Epoxipoliéster Azul Marino RAL5010. Polvo termoestable a base de resinas poliéster, modificadas con resina epoxídica.

Propiedades mecánicas:
- Las pruebas realizadas con las chapas finas Unichim desengrasadas con grosor del film de 60 micrones han satisfecho las siguientes exigencias: adherencia (ISO2409).

Resistencia al calor:
- 24 HORAS A 150°C.

Resistencia a la corrosión:
- Niebla salina ASTM B 117/97 de 100 a 500 horas en función del tratamiento preliminar del soporte.

Prestaciones:
- Capacidad de carga verificada según DIN 3990, ISO 6336, AGMA 2101, ISO 10300, DIN 3991, ISO 281, DIN 743.

Rendimiento η:
- El rendimiento de funcionamiento es la relación entre la potencia suministrada a la salida P_2 y la absorbida por el reductor P_1: $\eta = P_2/P_1$.

Los reductores pendulares de la serie S presentan un valor medio igual a:
S..2 trenes = 0,96
S..3 trenes = 0,94

2.2 TIPOLOGÍA

2.2.1 Designación

2.2 TIPOLOGÍA

2.2.2 Versiones

S... C - S... D - S... L

S.. C FIJACIÓN PATAS-BRIDA / EJE HUECO

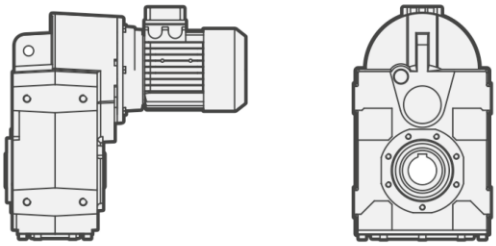

S.. D FIJACIÓN PATAS-BRIDA / EJE MACIZO D

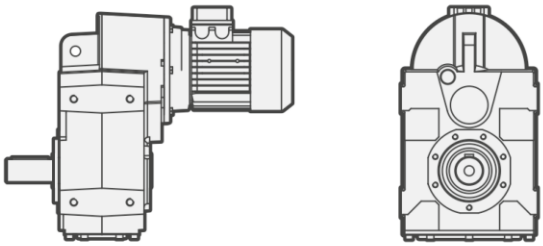

S.. L FIJACIÓN PATAS-BRIDA / EJE HUECO CON ARO DE APRIETE

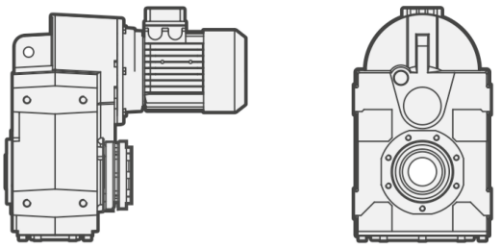

2.2.3 Modularidad

S SERIE EN FUNDICIÓN GRIS

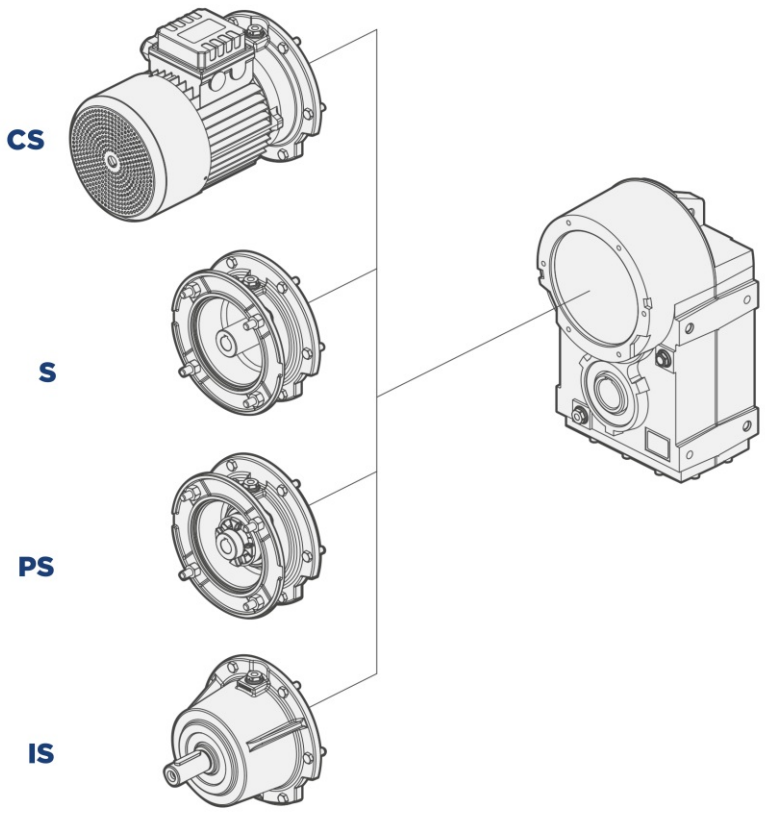

CS
Versión motorreductor compacto

S
Versión motorreductor (PAM)

PS
Predispuesto para montaje motor con acoplamiento

IS
Versión con eje macho de entrada

2.3 POSICIONES DE MONTAJE

2.3.1 Posiciones de montaje

Siempre que sea posible utilizar la posición de montaje B3, que desde el punto de vista técnico garantiza mejor batida del aceite, mejor lubricación y menor calentamiento.

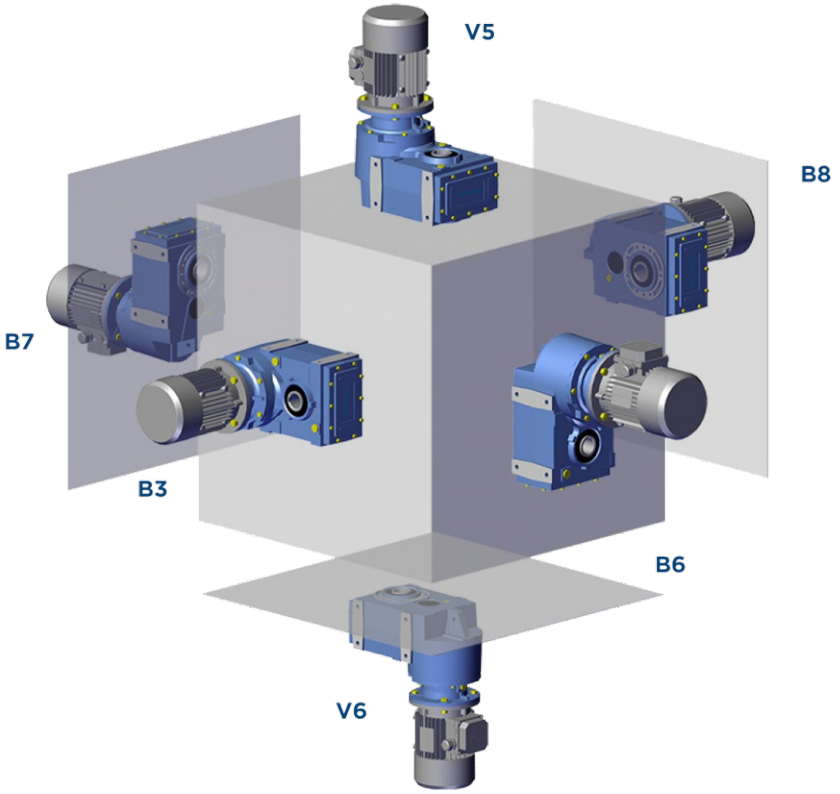

2.3.2 Posición caja de bornes

De no especificarse lo contrario en el pedido, el motorreductor se monta con caja de bornes en posición 1.

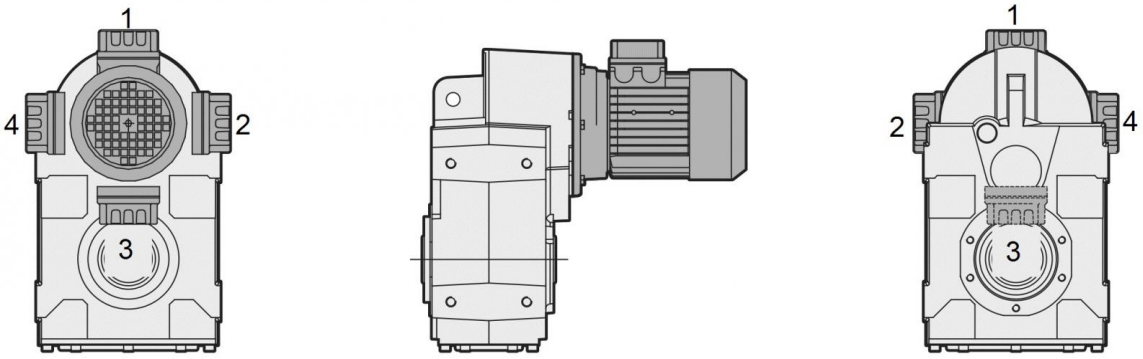

2.4 POTENCIA TÉRMICA

2.4.1 Información

La siguiente tabla contiene los valores de potencia térmica nominal Pth expresada en [kW] en las siguientes condiciones de referencia:

- posición de montaje B3
- funcionamiento continuo con velocidad de entrada <= 1500 rpm
- temperatura ambiente de T_{amb}=25°C
- altura sobre el nivel del mar
- velocidad del aire en torno al reductor >= 1m/s
- ausencia de cargas radiales y/o axiales externas

n_1=1500rpm	
	Pth [kW]
S052	7
S062	9,5
S082	15,5
S102	20,5
S122	34,5
S142	53
S152	65

En las condiciones de referencia mencionadas, aplicando al reductor una potencia no mayor que la Pth, se garantiza una correcta lubricación y el buen funcionamiento del reductor (T aceite max=95°C).

NOTA: Las versiones de los reductores con tres etapas de reducción no necesitan la verificación de la potencia térmica ya que no se alcanzan los límites térmicos.

2.4.2 Controlar

Controlar la aplicación

Salvo cuando los tiempos de funcionamiento continuo son menores que dos horas y se producen pausas capaces de llevar el reductor a la temperatura ambiente, para cada aplicación es perentorio realizar la verificación del límite térmico del reductor, según la siguiente fórmula: **P_1 < Pth * Fc * Fv * Fa ,** donde:

- P_1 = potencia a la entrada del reductor [kW]
- Pth = potencia térmica en condiciones de referencia [kW] (ver la tabla de arriba)
- Fc = factor de corrección de la temperatura ambiente y servicio
- Fv = factor de corrección de aireación
- Fa = factor de corrección de la altitud

Los factores de corrección son relativos a condiciones operativas diferentes a las de referencia y se encuentran en las siguientes tablas ISO14179:

		Servicio con carga por hora de funcionamiento				
	Fc	100	80	70	40	20
Temperatura ambiente °C	10	1,15	1,21	1,32	1,55	2,07
	18	1,07	1,12	1,23	1,44	1,93
	25	1,00	1,05	1,15	1,35	1,80
	30	0,93	0,98	1,07	1,26	1,67
	40	0,83	0,87	0,95	1,12	1,49
	43	0,75	0,79	0,86	1,01	1,35
	50	0,67	0,70	0,77	0,90	1,21

Altitud (m)	Fa
0*	1
750	0,95
1500	0,9
2250	0,85
3000	0,81

Velocidad del aire ambiental	Fv
Aire estancado (<0,5 m/s)	0.75
Instalación cubierta con poca aireación	1
Instalación cubierta con buena aireación (>1,4 m/s)	1.4
Instalación al aire libre (>3,7 m/s)	1.9

*Nivel del mar

En el caso de funcionamiento con velocidades de entrada mayores que 2000 rpm o temperaturas ambiente mayores que 40°C es aconsejable llamar a nuestro servicio de asistencia técnica.

2.5 APLICACIONES CRÍTICAS

2.5.1 Aplicaciones críticas

S	050	060	080	100	125	140	150
2000 < n1 < 3000	✔	✔	✔	✔	✔	B	B
V6	B	B	B	B	B	B	B
n1 > 3000	B	B	B	B	B	A	A
...L : V5 - V6	B	B	B	B	B	B	B
(*) ...L	B	B	B	B	B	B	B

✔ Aplicación verificada
A Aplicación desaconsejada
B Controlar la aplicación y/o ponerse en contacto con nuestro servicio técnico

(*) El aro de apriete está diseñado solo para transmitir el par de salida.
En caso posiciones de montaje con cargas radiales y/o axiales contacte con el servicio técnico.

2.5.2 Información

Las prestaciones indicadas en el catálogo corresponden a la posición B3 o similar, cuando el primer tren de engranajes no está completamente sumergido en el aceite. Para posiciones de montaje distintas y/o de velocidades particulares de entrada, atenerse a las
tablas que ponen en evidencia las distintas situaciones críticas por cada tamaño de reductor. Además es necesario considerar y evaluar cuidadosamente las siguientes aplicaciones, poniéndose en contacto con nuestro Servicio Técnico:

- Evitar la utilización como multiplicador.
- Utilización en servicios que, en caso de ruptura del reductor, podrían resultar peligrosos para personas.
- Aplicaciones con inercias particularmente elevadas.
- Utilización como cabrestante de levantamiento.
- Aplicaciones con esfuerzos dinámicos elevados sobre la carcasa del reductor.
- Utilización en ambiente con T_{amb} inferior a -5°C o superior a 40°C.
- Utilización en ambiente con presencia de agentes químicos agresivos.
- Utilización en ambiente salino.
- Posiciones de montaje no previstas en el catálogo.
- Utilización en ambiente radioactivo.
- Utilización en ambiente con presión distinta de la atmosférica.

Evitar aplicaciones donde está prevista la inmersión, aún parcial, del reductor.
En presencia de sobrecargas, debidas a arranques a plena carga, frenadas, colisiones y otras causas estáticas y dinámicas, verificar siempre que el pico de momento torsor sea siempre inferior a $2*Mn_2$.

2.6 PREDISPOSICIÓN

B11 = Versión motorreductor compacto.

Rogamos considerar que tratase de tablas de combinaciones posibles. Verifiquen el factor de servicio.

*Para motor tamaño 063 no existe la versión PB.

CS - S - PS 052				
i	071	080	090	100-112
8,63	B5-B11	B5-B11	B5-B11	B5-B11
11,14	B5-B11	B5-B11	B5-B11	B5-B11
12,00	B5-B11	B5-B11	B5-B11	B5-B11
13,66	B5-B11	B5-B11	B5-B11	B5-B11
15,27	B5-B11	B5-B11	B5-B11	B5-B11
16,29	B5-B11	B5-B11	B5-B11	B5-B11
18,63	B5-B11	B5-B11	B5-B11	B5-B11
19,73	B5-B11	B5-B11	B5-B11	B5-B11
21,04	B5-B11	B5-B11	B5-B11	B5-B11
21,53	B5-B11	B5-B11	B5-B11	B5-B11
24,07	B5-B11	B5-B11	B5-B11	B5-B11
25,20	B5-B11	B5-B11	B5-B11	B5-B11
25,79	B5-B11	B5-B11	B5-B11	B5-B11
27,81	B5-B11	B5-B11	B5-B11	B5-B11
30,00	B5-B11	B5-B11	B5-B11	
32,55	B5-B11	B5-B11	B5-B11	B5-B11
33,00	B5-B11	B5-B11	B5-B11	
34,09	B5-B11	B5-B11	B5-B11	B5-B11
36,55	B5-B11	B5-B11	B5-B11	
38,75	B5-B11	B5-B11	B5-B11	
39,90	B5-B11	B5-B11	B5-B11	B5-B11
42,63	B5-B11	B5-B11	B5-B11	
46,00	B5-B11	B5-B11	B5-B11	
47,20	B5-B11	B5-B11	B5-B11	
52,25	B5-B11	B5-B11	B5-B11	
57,86	B5-B11	B5-B11	B5-B11	
59,42	B5-B11	B5-B11	B5-B11	
72,83	B5-B11	B5-B11	B5-B11	

CS - S - PS 053				
i	*063	071	080	090
36,50	B5-B11	B5-B11	B5-B11	B5-B11
47,14	B5-B11	B5-B11	B5-B11	B5-B11
57,79	B5-B11	B5-B11	B5-B11	B5-B11
63,74	B5-B11	B5-B11	B5-B11	B5-B11
78,14	B5-B11	B5-B11	B5-B11	B5-B11
74,20	B5-B11	B5-B11	B5-B11	B5-B11
95,84	B5-B11	B5-B11	B5-B11	B5-B11
117,48	B5-B11	B5-B11	B5-B11	B5-B11
137,45	B5-B11	B5-B11	B5-B11	B5-B11
177,55	B5-B11	B5-B11	B5-B11	B5-B11
198,45	B5-B11	B5-B11	B5-B11	
217,64	B5-B11	B5-B11	B5-B11	B5-B11
256,33	B5-B11	B5-B11	B5-B11	
314,21	B5-B11	B5-B11	B5-B11	

2.6 PREDISPOSICIÓN

CS - S - PS 062				
i	071	080	090	100-112
8,00		B5-B11	B5-B11	B5-B11
8,92		B5-B11	B5-B11	B5-B11
9,55		B5-B11	B5-B11	B5-B11
10,65		B5-B11	B5-B11	B5-B11
11,71		B5-B11	B5-B11	B5-B11
13,06		B5-B11	B5-B11	B5-B11
13,36		B5-B11	B5-B11	B5-B11
15,94		B5-B11	B5-B11	B5-B11
16,16		B5-B11	B5-B11	B5-B11
19,29		B5-B11	B5-B11	B5-B11
19,55		B5-B11	B5-B11	B5-B11
23,18	B5-B11	B5-B11	B5-B11	B5-B11
23,75	B5-B11	B5-B11	B5-B11	B5-B11
25,14	B5-B11	B5-B11	B5-B11	B5-B11
27,66	B5-B11	B5-B11	B5-B11	B5-B11
30,00	B5-B11	B5-B11	B5-B11	B5-B11
33,93	B5-B11	B5-B11	B5-B11	B5-B11
36,57	B5-B11	B5-B11	B5-B11	B5-B11
39,38	B5-B11	B5-B11	B5-B11	B5-B11
43,64	B5-B11	B5-B11	B5-B11	B5-B11
46,10	B5-B11	B5-B11	B5-B11	
48,30	B5-B11	B5-B11	B5-B11	B5-B11
53,53	B5-B11	B5-B11	B5-B11	B5-B11
55,00	B5-B11	B5-B11	B5-B11	
67,47	B5-B11	B5-B11	B5-B11	

CS - S - PS 063			
i	071	080	090
33,57	B5-B11	B5-B11	B5-B11
37,77	B5-B11	B5-B11	B5-B11
40,05	B5-B11	B5-B11	B5-B11
49,13	B5-B11	B5-B11	B5-B11
55,29	B5-B11	B5-B11	B5-B11
58,72	B5-B11	B5-B11	B5-B11
65,85	B5-B11	B5-B11	B5-B11
68,25	B5-B11	B5-B11	B5-B11
73,63	B5-B11	B5-B11	B5-B11
81,43	B5-B11	B5-B11	B5-B11
99,89	B5-B11	B5-B11	B5-B11
126,43	B5-B11	B5-B11	B5-B11
150,85	B5-B11	B5-B11	B5-B11
182,53	B5-B11	B5-B11	B5-B11
185,05	B5-B11	B5-B11	B5-B11
217,79	B5-B11		
267,16	B5-B11		

CS - S - PS 082				
i	080	090	100-112	132
7,34	B5-B11	B5-B11	B5-B11	B5-B11
8,06	B5-B11	B5-B11	B5-B11	B5-B11
9,94	B5-B11	B5-B11	B5-B11	B5-B11
11,61	B5-B11	B5-B11	B5-B11	B5-B11
12,75	B5-B11	B5-B11	B5-B11	B5-B11
14,04	B5-B11	B5-B11	B5-B11	B5-B11
15,43	B5-B11	B5-B11	B5-B11	B5-B11
15,73	B5-B11	B5-B11	B5-B11	B5-B11
17,29	B5-B11	B5-B11	B5-B11	B5-B11
19,03	B5-B11	B5-B11	B5-B11	B5-B11
20,14	B5-B11	B5-B11	B5-B11	B5-B11
22,13	B5-B11	B5-B11	B5-B11	B5-B11
24,00	B5-B11	B5-B11	B5-B11	B5-B11
26,05	B5-B11	B5-B11	B5-B11	B5-B11
27,29	B5-B11	B5-B11	B5-B11	B5-B11
28,67	B5-B11	B5-B11	B5-B11	B5-B11
29,60	B5-B11	B5-B11	B5-B11	B5-B11
31,78	B5-B11	B5-B11	B5-B11	B5-B11
34,91	B5-B11	B5-B11	B5-B11	B5-B11
35,50	B5-B11	B5-B11	B5-B11	
40,05	B5-B11	B5-B11	B5-B11	B5-B11
43,05	B5-B11	B5-B11	B5-B11	B5-B11
50,25	B5-B11	B5-B11	B5-B11	
54,27	B5-B11	B5-B11	B5-B11	
61,98	B5-B11	B5-B11	B5-B11	

CS - S - PS 083				
i	071	080	090	100-112
67,52		B5-B11	B5-B11	B5-B11
74,18		B5-B11	B5-B11	B5-B11
81,71		B5-B11	B5-B11	B5-B11
91,49		B5-B11	B5-B11	B5-B11
100,62		B5-B11	B5-B11	B5-B11
117,17	B5-B11	B5-B11	B5-B11	
128,73	B5-B11	B5-B11	B5-B11	
136,34	B5-B11	B5-B11	B5-B11	B5-B11
158,76	B5-B11	B5-B11	B5-B11	
184,88	B5-B11	B5-B11	B5-B11	
203,11	B5-B11	B5-B11	B5-B11	
205,34	B5-B11	B5-B11	B5-B11	B5-B11
226,04	B5-B11	B5-B11	B5-B11	B5-B11
250,50	B5-B11	B5-B11	B5-B11	
266,13	B5-B11	B5-B11	B5-B11	
292,36	B5-B11	B5-B11	B5-B11	
315,73	B5-B11	B5-B11	B5-B11	
360,58	B5-B11	B5-B11	B5-B11	

2.6 PREDISPOSICIÓN

CS - S - PS 102					
i	080	090	100-112	132	160
8,06	B5-B11	B5-B11	B5-B11	B5-B11	B5
8,85	B5-B11	B5-B11	B5-B11	B5-B11	B5
10,88	B5-B11	B5-B11	B5-B11	B5-B11	B5
12,75	B5-B11	B5-B11	B5-B11	B5-B11	B5
13,99	B5-B11	B5-B11	B5-B11	B5-B11	B5
15,43	B5-B11	B5-B11	B5-B11	B5-B11	
17,21	B5-B11	B5-B11	B5-B11	B5-B11	B5
19,00	B5-B11	B5-B11	B5-B11	B5-B11	
20,83	B5-B11	B5-B11	B5-B11	B5-B11	
22,13	B5-B11	B5-B11	B5-B11	B5-B11	
24,28	B5-B11	B5-B11	B5-B11	B5-B11	
26,33	B5-B11	B5-B11	B5-B11	B5-B11	
29,87	B5-B11	B5-B11	B5-B11	B5-B11	
32,40	B5-B11	B5-B11	B5-B11	B5-B11	
34,91	B5-B11	B5-B11	B5-B11	B5-B11	
38,30	B5-B11	B5-B11	B5-B11	B5-B11	
42,53	B5-B11	B5-B11	B5-B11	B5-B11	
44,00	B5-B11	B5-B11	B5-B11		
47,13	B5-B11	B5-B11	B5-B11	B5-B11	
50,25	B5-B11	B5-B11	B5-B11		
55,14	B5-B11	B5-B11	B5-B11		
59,40	B5-B11	B5-B11	B5-B11		
67,84	B5-B11	B5-B11	B5-B11		

CS - S - PS 103				
i	071	080	090	100-112
74,18		B5-B11	B5-B11	B5-B11
81,39		B5-B11	B5-B11	B5-B11
89,77		B5-B11	B5-B11	B5-B11
100,15		B5-B11	B5-B11	B5-B11
110,55	B5-B11	B5-B11	B5-B11	B5-B11
121,29	B5-B11	B5-B11	B5-B11	B5-B11
128,73	B5-B11	B5-B11	B5-B11	B5-B11
141,24	B5-B11	B5-B11	B5-B11	B5-B11
173,78	B5-B11	B5-B11	B5-B11	B5-B11
188,51	B5-B11	B5-B11	B5-B11	B5-B11
203,11	B5-B11	B5-B11	B5-B11	B5-B11
222,85	B5-B11	B5-B11	B5-B11	B5-B11
224,76	B5-B11	B5-B11	B5-B11	B5-B11
274,20	B5-B11	B5-B11	B5-B11	B5-B11
280,89	B5-B11	B5-B11	B5-B11	
292,36	B5-B11	B5-B11	B5-B11	
320,79	B5-B11	B5-B11	B5-B11	
345,60	B5-B11	B5-B11	B5-B11	
394,69	B5-B11	B5-B11	B5-B11	

CS - S - PS 122							
i	080	090	100-112	132	160	180	200
8,48					B5	B5	B5
9,30					B5	B5	B5
10,24					B5	B5	B5
11,42					B5	B5	B5
12,63					B5	B5	B5
13,84					B5	B5	B5
16,99					B5	B5	B5
21,25			B5-B11	B5-B11	B5	B5	
22,37			B5-B11	B5-B11	B5	B5	
23,29			B5-B11	B5-B11	B5	B5	
26,15			B5-B11	B5-B11	B5	B5	
28,60			B5-B11	B5-B11	B5	B5	
30,51			B5-B11	B5-B11	B5	B5	
32,76			B5-B11	B5-B11	B5	B5	
33,44			B5-B11	B5-B11	B5	B5	
35,20			B5-B11	B5-B11	B5	B5	
41,07			B5-B11	B5-B11	B5	B5	
43,60	B5-B11	B5-B11	B5-B11	B5-B11			
44,63	B5-B11	B5-B11	B5-B11	B5-B11			
49,04	B5-B11	B5-B11	B5-B11	B5-B11			
53,75	B5-B11	B5-B11	B5-B11	B5-B11			
66,00	B5-B11	B5-B11	B5-B11	B5-B11			

CS - S - PS 123				
i	080	090	100-112	132
64,84			B5-B11	B5-B11
71,07			B5-B11	B5-B11
78,46			B5-B11	B5-B11
87,27			B5-B11	B5-B11
105,91			B5-B11	B5-B11
112,52	B5-B11	B5-B11	B5-B11	B5-B11
123,33	B5-B11	B5-B11	B5-B11	B5-B11
130,04	B5-B11	B5-B11	B5-B11	B5-B11
133,78	B5-B11	B5-B11	B5-B11	B5-B11
151,43	B5-B11	B5-B11	B5-B11	B5-B11
177,53	B5-B11	B5-B11	B5-B11	B5-B11
194,59	B5-B11	B5-B11	B5-B11	B5-B11
215,60	B5-B11	B5-B11	B5-B11	B5-B11
238,93	B5-B11	B5-B11	B5-B11	B5-B11
255,54	B5-B11	B5-B11	B5-B11	
280,10	B5-B11	B5-B11	B5-B11	
301,16	B5-B11	B5-B11	B5-B11	
343,93	B5-B11	B5-B11	B5-B11	

2.6 PREDISPOSICIÓN

S142				
i	132	160	180	200
4.11	B5	B5	B5	B5
4.58	B5	B5	B5	B5
5.14	B5	B5	B5	B5
5.81	B5	B5	B5	B5
6.21	B5	B5	B5	B5
7.31	B5	B5	B5	B5
8.20	B5	B5	B5	B5
9.28	B5	B5	B5	B5
9.91	B5	B5	B5	B5
11.40	B5	B5	B5	B5
12.81	B5	B5	B5	B5
14.27	B5	B5	B5	B5
16.00	B5	B5	B5	B5
18.10	B5	B5	B5	B5
19.33	B5	B5	B5	B5
22.24	B5	B5	B5	B5
25.26	B5	B5	B5	
28.33	B5	B5	B5	
32.05	B5	B5	B5	
34.22	B5	B5	B5	
39.37	B5	B5		

S143			
i	100 - 112	132	160
45.76	B5	B5	B5
50.97	B5	B5	B5
57.17	B5	B5	B5
64.67	B5	B5	B5
69.05	B5	B5	B5
79.45	B5	B5	B5
98.80	B5	B5	
110.05	B5	B5	
123.43	B5	B5	
139.64	B5	B5	
149.09	B5	B5	
157.48	B5		

S152				
i	160	180	200	225
4.06	B5	B5	B5	B5
4.53	B5	B5	B5	B5
5.20	B5	B5	B5	B5
5.71	B5	B5	B5	B5
6.52	B5	B5	B5	B5
7.28	B5	B5	B5	B5
8.35	B5	B5	B5	B5
9.17	B5	B5	B5	B5
10.41	B5	B5	B5	B5
12.46	B5	B5	B5	B5
13.90	B5	B5	B5	B5
15.96	B5	B5	B5	B5
17.52	B5	B5	B5	B5
19.90	B5	B5	B5	B5
22.88	B5	B5	B5	B5
27.10	B5	B5	B5	B5
29.75	B5	B5	B5	B5
33.79	B5	B5	B5	B5
38.84	B5	B5	B5	B5

S153			
i	132	160	180
40.10	B5	B5	B5
44.75	B5	B5	B5
51.37	B5	B5	B5
56.39	B5	B5	B5
64.05	B5	B5	B5
73.62	B5	B5	B5
87.16	B5	B5	
97.27	B5	B5	
111.66	B5	B5	
122.56	B5	B5	
139.20	B5	B5	
154.01	B5		
160.01	B5		
176.81	B5		
194.05	B5		
220.41	B5		
253.35	B5		

2.7 RODAMIENTOS

S	S050		S060		S080		S100	
Versiones	Estándar	A solicitud	Estándar	A solicitud	Estándar	A solicitud	Estándar	A solicitud
C	1	/	1	2	1 (Ø40)	2 (Ø40)	1	2
						1 (Ø45)		
D	1	/	1	/	2	/	2	/
L	1	/	1	/	1	/	1	/

S	S125		S140		S150	
Versiones	Estándar	A solicitud	Estándar	A solicitud	Estándar	A solicitud
C	1	2	1	2	1	2
D	2	/	2	/	2	/
L	1	/	1	/	1	/

1 - Rodamientos de bola

2 - Rodamientos de rodillos

/ - No existen

2.8 CARGAS RADIALES

2.8.1 Información

El valor de carga radial [N] admisibile se indica en las tablas de prestaciones de los reductores y se refiere a la carga aplicada sobre la línea de centro del eje y en las condiciones más desfavorables como ángulo de aplicación y sentido de rotación. Las cargas axiales máximas admisibles son 1/5 del valor de carga radial indicado, cuando están aplicadas en combinación con la carga radial misma. En las tablas relacionadas a los ejes de salida se indica el valor máximo admisible; nunca se debe superar este valor, porque se refiere a la resistencia de la carcasa. Podrían presentarse condiciones particulares de carga radial superiores a los límites de catálogo; en este caso, ponerse en contacto con nuestro Servicio técnico e indicar todos los datos de la aplicación: dirección de carga, sentido de rotación del eje, tipo de servicio. En caso de ejes dobles o huecos sobre los que se prevea la aplicación de cargas radiales sobre ambos extremos, las cargas máximas admisibles se deben definir en función de las características de la aplicación, en ese caso contactar a nuestro Servicio Técnico. La carga radial sobre el eje se calcula con la siguiente fórmula: **Fre=(2000*M*fz)/D≤Fr1 o Fr2**

- **Fre** [N] Carga radial resultante
- **M** [Nm] Par de torsión sobre el eje
- **D** [mm] Diámetro del elemento de transmisión montado sobre el eje
- **Fr1**-**Fr2** [N] Valor de carga radial máximo admitido (ver tablas correspondientes)
- **fz** = 1,1 piñón dentado - 1,4 piñón de cadena - 1,7 polea para correa trapezoidal - 2,5 polea plana

2.8.2 Entrada

Si la carga radial resultante no se aplica sobre el centro del eje, corregir la carga radial admisible Fr1 mediante la siguiente fórmula: **Frx=(Fr1*a)/(b+x)**

- **a** , **b** = valores indicados en las tablas
- **x** = distancia desde el punto de aplicación de la carga hasta la base del eje

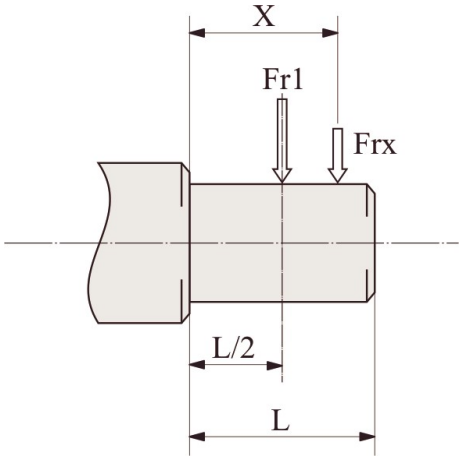

IS	052/053	062/063	082/083	102/103	122/123	142/143	152/153
a	105	105	137	137	175	146	190
b	80	80	108	108	135	106	135
Fr1 max(**)	1500	2500	3600	3600	7200	4200	5200

(**Fr1) Valor máx. admisible del reductor en condiciones estáticas y/o para funcionamiento limitado. Para cargas radiales en servicio continuo verificar los valores de las tablas de prestaciones calculados en función de la carcasa, del eje y de los rodamientos.

2.8 CARGAS RADIALES

2.8.3 Salida

Si la carga radial resultante no se aplica sobre el centro del eje, corregir la carga radial admisible Fr2 mediante la siguiente fórmula: **Frx=(Fr2*a)/(b+x)**

- **a** , **b** = valores indicados en las tablas
- **x** = distancia desde el punto de aplicación de la carga hasta la base del eje

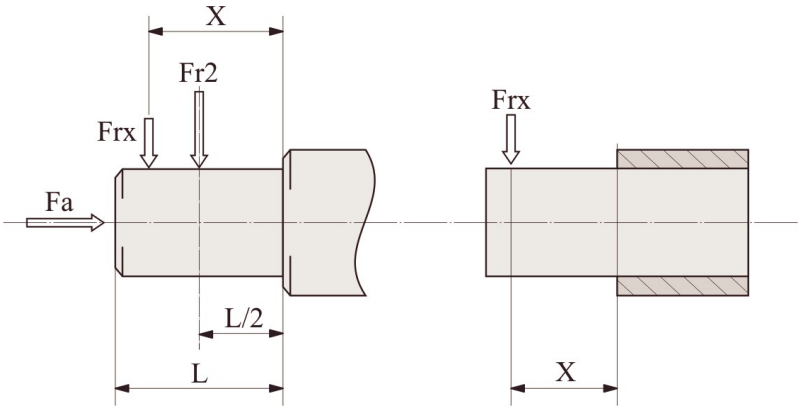

S	052/053	062/063	082/083	102/103	122/123	142/143	152/153
a	125	145	190	225	265	360,5	409,5
b	96	116	150	175	202	261	299
D (Fr2 max**)	6000	10000	18000	22000	30000	35000	40000
C (Fr2 max**)	6000	4000	7200	9000	11200	18500	19400

(**Fr2) Valor máx. admisible del reductor en condiciones estáticas y/o para funcionamiento limitado. Para cargas radiales en servicio continuo verificar los valores de las tablas de prestaciones calculados en función de la carcasa, del eje y de los rodamientos.

2.9 LUBRICACIÓN

2.9.1 Información

En caso de temperaturas ambiente no previstas en la tabla, ponerse en contacto con nuestro Servicio técnico. En caso de temperaturas inferiores a -30°C o superiores a 60°C, es necesario utilizar anillos de retén con mezclas especiales. Para los campos de funcionamiento con temperaturas inferiores a 0°C, es necesario cumplir con lo que sigue:

1. Los motores tienen que ser idóneos al funcionamiento con la temperatura ambiente prevista.
2. La potencia del motor eléctrico debe adecuarse para superar los mayores pares de arranque solicitados.
3. En caso de reductor con carcasa de fundición, cuidado con las cargas de choque porque la fundición puede presentar problemas de fragilidad con temperaturas inferiores a los -15°C.
4. Durante las primeras fases de servicio podrían surgir problemas de lubricación debidos a la elevada viscosidad del aceite y es por lo tanto oportuno efectuar una rotación en "vacío" por algunos minutos.

El cambio de aceite (productos NO Atex) debe realizarse tras aproximadamente 10.000 horas/2 años de funcionamiento, este período dependerá del tipo de servicio y del ambiente en el cual trabaja el reductor. Para grupos suministrados sin tapones para aceite la lubricación es permanente, por lo que no requieren mantenimiento.

2.9.2 Lubricantes

Especificaciones de lubricante aconsejados por Motovario.
Salvo otros acuerdos, los grupos **S052/3 ÷ 122/3** se entregan con aceite ENI BLASIA 220.
Los grupos **S142 / 3 ÷ 152/3** se suministran sin lubricante.

	S052/3 ÷ 152/3	
	Aceite mineral	
T_{amb}°C ISO/SAE	**(-5) ÷ (+40) ISO VG220**	**(-15) ÷ (+25) ISO VG150**
ENI	BLASIA 220	BLASIA 150
SHELL	OMALA OIL220	OMALA OIL150
KLUBER	Kluberoil GEM 1-220N	Kluberoil GEM 1-150N
MOBIL	MOBILGEAR 600 XP220	MOBILGEAR 600 XP150
CASTROL	ALPHA SP 220	ALPHA SP 150
BP	ENERGOL GR-XP220	ENERGOL GR-XP150

2.9 LUBRICACIÓN

2.9.3 Lubricantes especiales

	T_{amb}°C	Aceite sintético basado en poliglicoles
ENI	**(-30) ÷ (+30)**	Blasia S 150 (ISO VG150)
	(-20) ÷ (+40)	Blasia S 220 (ISO VG220)
MOBIL	**(-45) ÷ (+0)**	SCH 624 (ISO VG32)
	(-40) ÷ (+5)	SCH 626 (ISO VG68)
KLUBER	**(-40) ÷ (+5)**	Klubersynth GH 6-32 (ISO VG32)
	(-35) ÷ 10)	Klubersynth GH 6-80 (ISO VG80)
	(-30) ÷ (+40)	Klubersynth GH 6-150 (ISO VG150)
	(-25) ÷ (+40)	Klubersynth GH 6-220 (ISO VG220)
	(-15) ÷ (+50)	Klubersynth GH 6-460 (ISO VG460)
	(-10) ÷ (+70)	Klubersynth GH 6-680 (ISO VG680)

	T_{amb}°C	Aceite sintético basado en poliglicoles para sector alimentario
KLUBER	**(-30) ÷ (+15)**	Klubersynth UH1-6 100 (ISO VG100)
	(-25) ÷ (+40)	Klubersynth UH1-6 220 (ISO VG220)
	(-15) ÷ (+40)	Klubersynth UH1-6 320 (ISO VG320)
	(-15) ÷ (+50)	Klubersynth UH1-6 460 (ISO VG460)
	(-10) ÷ (+50)	Klubersynth UH1-6 680 (ISO VG680)

Para el uso de lubricantes especiales contactar con la asistencia técnica.

2.9 LUBRICACIÓN

2.9.4 Cantidad

- Para los reductores S.. de 2,3 trenes es necesario especificar siempre la posición de montaje prevista.
- Los reductores de la serie S050,S060 se suministran con lubricante, no disponen de tapón de aceite y no necesitan ningún mantenimiento.
- Los reductores de la serie S080,S100,S125 se suministran con lubricante y disponen de tapones para todas las posiciones de montaje previstas en el catálogo.
- Los reductores de la serie S140,S150 se suministran sin lubricante.

Es necesario, una vez instalado el reductor en la máquina, sustituir el tapón cerrado, utilizado durante el transporte, por el tapón respiradero que se adjunta.
Las cantidades de aceite en la tabla (litros ~) son únicamente indicativas y para un relleno correcto se tendrá que hacer referencia al tapón de nivel o a la varilla de nivel si estuviera presente. Las eventuales diferencias en el nivel pueden depender de tolerancias de fabricación, pero también del montaje del grupo o del plano de montaje en las instalaciones del cliente. Por dicho motivo, es oportuno que el cliente compruebe y, si es necesario, restablezca el nivel con el grupo instalado.

S - CS	052/053	062/063	082/083	102/103	122/123	142	143	152	153
B3	2,05	2,4	6	9	14,7	22	20	29,7	27
B8	1,8	2,3	4	6	11,8	20	20	31	31
B6	2,4	2,9	5,7	8	16	22 (25)	18 (24,5)	29,3 (42)	24 (40)
B7	2,1	2,6	4,5	6,8	11,3	17,5	14	22,5	18
V5	2,8	3,5	6,8	10,3	19	24,5	23,5	34,4	33
V6	2,4	2,9	6,4	9,9	18	20,8	20	33,3	32

(...) 142-143-152-153 Cantidad para dispositivo antirretorno

2.10 MOMENTOS DE INERCIA

Los siguientes valores del momento de inercia J1 son solo indicativos, respecto a los máximos calculados, y se refieren al eje de entrada del reductor.

S-2/3	J_1 [Kg*m2]
052/053	0,0004
062/063	0,0006
082/083	0,0015
102/103	0,0034
122/123	0,0085
142/143	0,0384
152/153	0,083

3.1 REDUCTORES/MOTORREDUCTORES

3.1.1 S 052...123

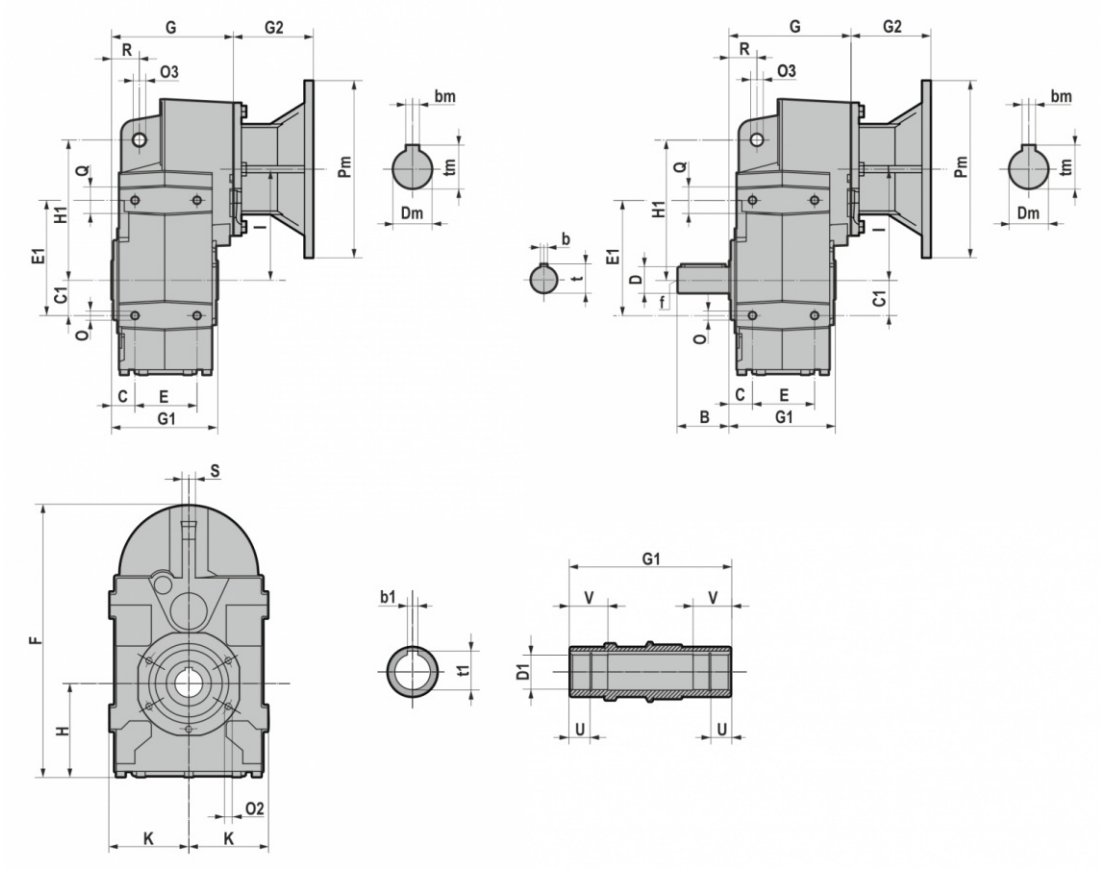

	D1 H7	b1	t1	U	V	B	D	b	t	f	C	C1	E	E1	F	G	G1	H	H1	I	K	O	O3	O2	Q	R	S
S052/S053	30	8	33	13,8	30	58	30 j6	8	33	M10	27	40	70	130	311	137,5	120	107	158	125	90,5	M10x18	14	M8x16 (n.5)	30	31,5	15
S062/S063	35	10	38	12	35	58	35 j6	10	38	M12	30	45	80	147	320	158,5	140	97	170	143	96,5	M12x20	14	M8x16 (n.5)	40	32	15
S082/S083	40	12	43	22,3	42	80	40 k6	12	43	M16	37	60	106	190	383	207	180	107	218	170	112,5	M12x20	14	M10x20 (n.7)	44	41	20
	45	14	48	22,3	42																						
S102/S103	45	14	49	22,3	50	100	50 k6	14	54	M16	37	70	137	275	426	217,5	210	119	278	180	130	M16x26	22	M12x22 (n.7)	50	50	20
	50	14	54	25	50																						
S122/S123	60	18	64	28	70	120	60 m6	18	64	M20	43	100	165	310	549	257	240	157	346	235	165	M16x30	22	M14x28 (n.7)	50	62	26

		G2		
IEC	**Pm x Dm**	050-060	080-100	125
063	**140x11**	57	/	/
071	**160x14**	69	49,0	/
080	**200x19**	90	70,0	60,5
090	**200x24**	90	70,0	60,5
100-112	**250x28**	105	85,0	75,5
132	**300x38**	/	110,0	100,5
160	**350x42**	/	157,5	148
180	**350x48**	/	157,5	148
200	**400x55**	/	/	185

B5	Pm	Dm	bm	tm
063	140	11	4	12,8
071	160	14	5	16,3
080	200	19	6	21,8
090	200	24	8	27,3
100	250	28	8	31,3
112	250	28	8	31,3
132	300	38	10	41,3
160	350	42	12	45,3
180	350	48	14	51,8
200	400	55	16	59,3

3.1.2 S 142...153

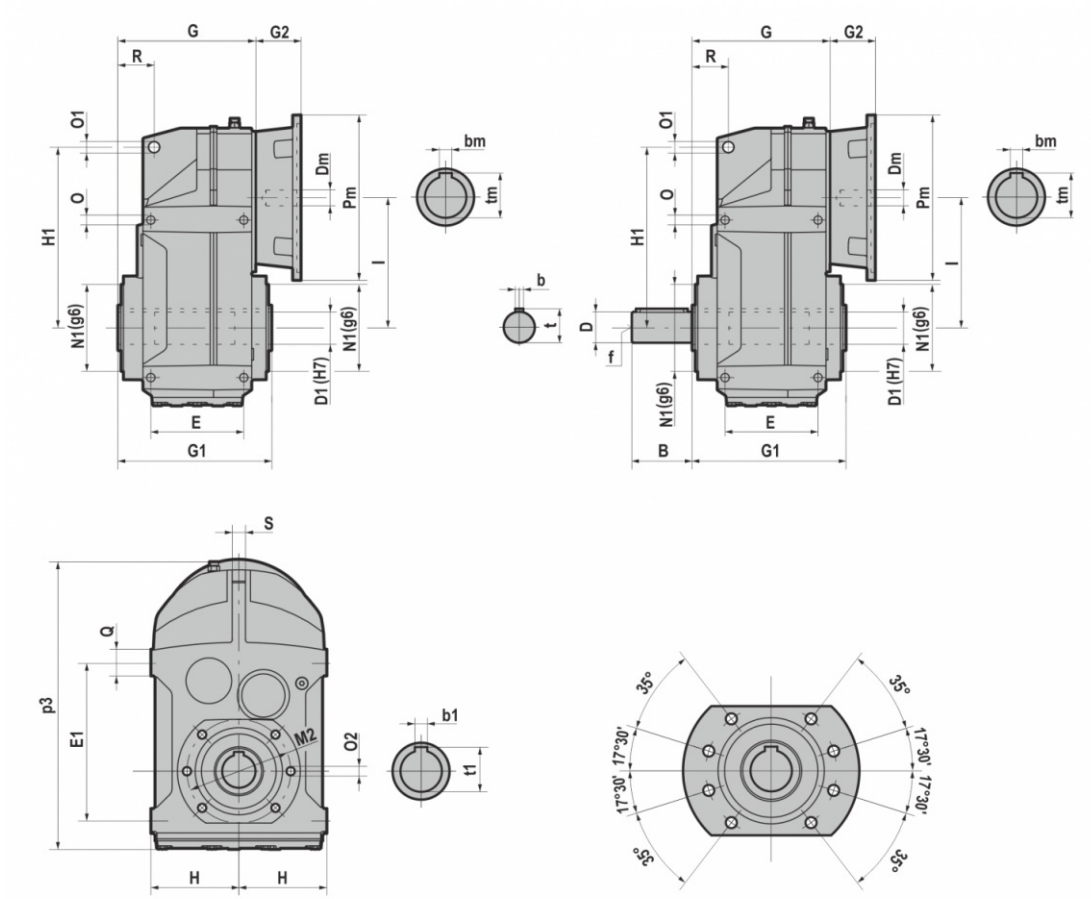

	D1	b1	t1	B	D	b	t	f	E	E1	G	G1	H	H1	I	N1	M2	O	O1	O2	p3	Q	R	S
S142/S143	70	20	74,9	140	70	20	74,5	M20	205	350	282	300	200	395	269	180	220	M20x28	26	M16x26	615	50	70	30
	65	18	69,4																					
S152/S153	90	25	95,4	140	70	20	74,5	M20	220	400	321,5	350	225	485	325	210	260	M24x36	26	M20x30	730	60	88	36
	80	22	85,4	170	90	25	95																	

		G2	
IEC	Pm x Dm	S142/S143	S152/S153
100-112	250x28	73,5	/
132	300x38	84,0	87,5
160	350x42	119,5	112
180	350x48	119,5	112
200	400x55	119,5	113
225	450x60	/	144,5

B5	Pm	Dm	bm	tm
100	250	28	8	31,3
112	250	28	8	31,3
132	300	38	10	41,3
160	350	42	12	45,3
180	350	48	14	51,8
200	400	55	16	59,3
225	450	60	18	64,4

3.1.3 CS 052...123

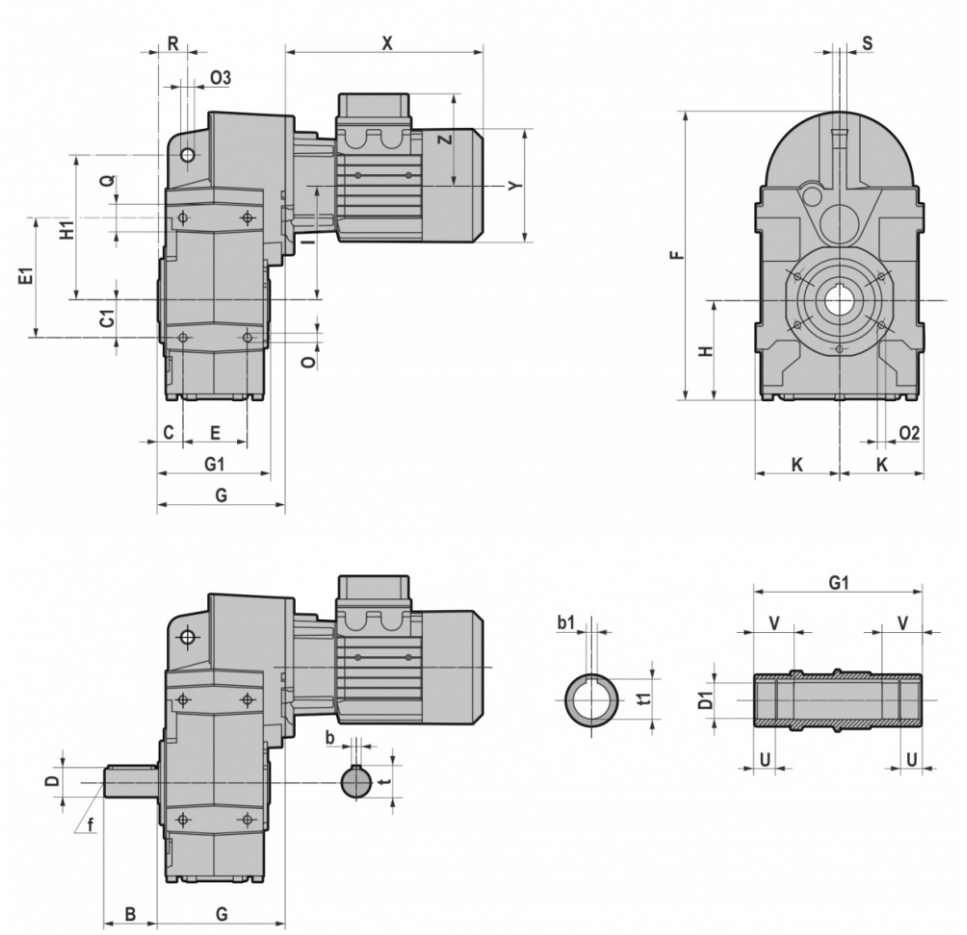

	D1 H7	b1	t1	U	V	B	D	b	t	f	C	C1	E	E1	F	G	G1	H	H1	I	K	O	O3	O2	Q	R	S
CS052/CS053	30	8	33	13,8	30	58	30 j6	8	33	M10	27	40	70	130	311	137,5	120	107	158	125	90,5	M10x18	14	M8x16 (n.5)	30	31,5	15
CS062/CS063	35	10	38	12	35	58	35 j6	10	38	M12	30	45	80	147	320	158,5	140	97	170	143	96,5	M12x20	14	M8x16 (n.5)	40	32	15
CS082/CS083	40	12	43	22,3	42	80	40 k6	12	43	M16	37	60	106	190	383	207	180	107	218	170	112,5	M12x20	14	M10x20 (n.7)	44	41	20
	45	14	48	22,3	42																						
CS102/CS103	45	14	49	22,3	50	100	50 k6	14	54	M16	37	70	137	275	426	217,5	210	119	278	180	130	M16x26	22	M12x22 (n.7)	50	50	20
	50	14	54	25	50																						
CS122/CS123	60	18	64	28	70	120	60 m6	18	64	M20	43	100	165	310	549	257	240	157	346	235	165	M16x30	22	M14x28 (n.7)	50	62	26

T (IE1 - IE2)										
		063	071	080	090S	090L	100	112	132S	132M/L
CS052/CS053 CS062/CS063	X	215	241	268	296	321	333	351	/	/
	Y	121	139	158	173	173	191	211	/	/
	Z	104	112	122	130	130	139	154	/	/
CS082/CS083 CS102/CS103	X	/	221	248	276	301	335	356	405	443
	Y	/	139	158	173	173	191	211	249	249
	Z	/	112	122	130	130	139	154	194	194
CS122/CS123	X	/	/	/	267	292	326	347	396	434
	Y	/	/	/	173	173	191	211	249	249
	Z	/	/	/	130	130	139	154	194	194

TB (IE1 - IE2)										
		063	071	080	090S	090L	100	112	132S	132M/L
CS052/CS053 CS062/CS063	X	273	306,5	341	373	398	415	448	/	/
	Y	121	139	158	173	173	191	211	/	/
	Z	119	129	137	157	157	168	183	/	/
CS082/CS083 CS102/CS103	X	/	286,5	321	353	378	417	453	505	547
	Y	/	139	158	173	173	191	211	249	249
	Z	/	129	137	157	157	168	183	230	230
CS122/CS123	X	/	/	/	343	368	407	443	495	537
	Y	/	/	/	173	173	191	211	249	249
	Z	/	/	/	157	157	168	183	230	230

3.1.4 IS 052...123

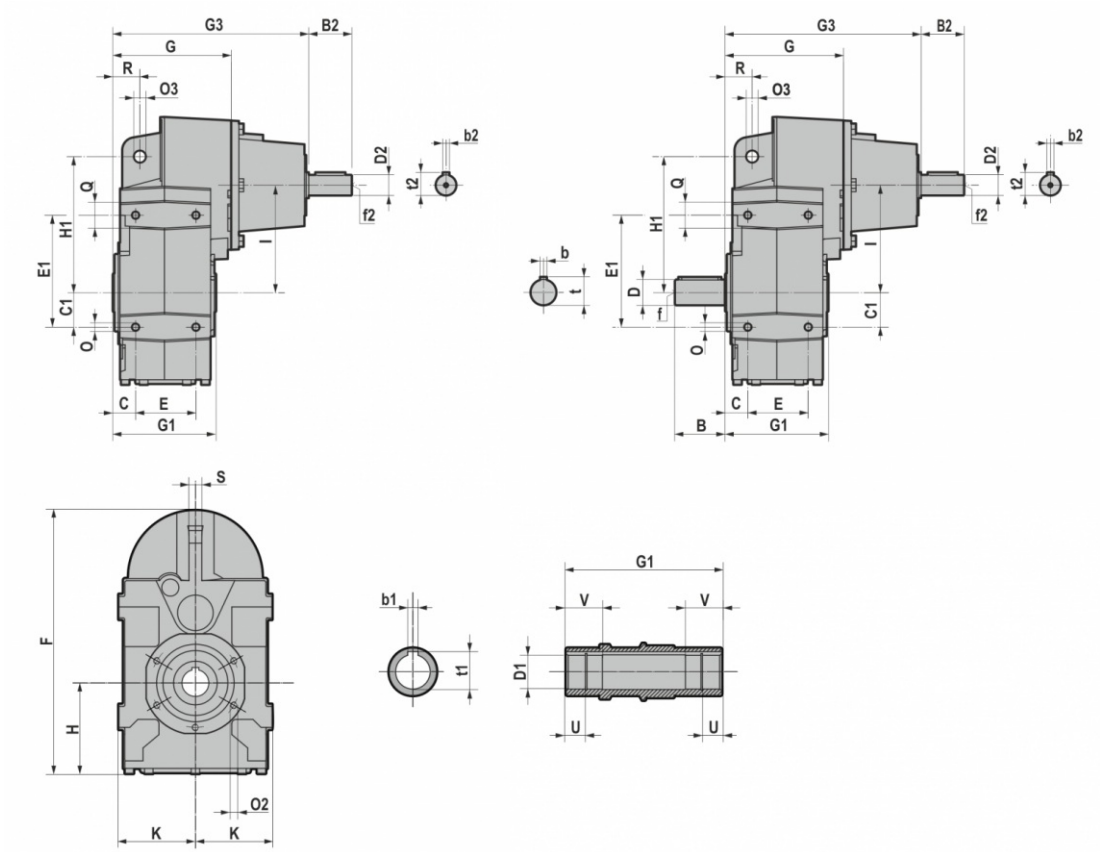

	D1 H7	b1	t1	U	V	B	D	b	t	f	C	C1	E	E1	F	G	G1	H	H1	I	K	O	O3	O2	Q	R	S
IS052/IS053	30	8	33	13,8	30	58	30 j6	8	33	M10	27	40	70	130	311	137,5	120	107	158	125	90,5	M10x18	14	M8x16 (n.5)	30	31,5	15
IS062/IS063	35	10	38	12	35	58	35 j6	10	38	M12	30	45	80	147	320	158,5	140	97	170	143	96,5	M12x20	14	M8x16 (n.5)	40	32	15
IS082/IS083	40	12	43	22,3	42	80	40 k6	12	43	M16	37	60	106	190	383	207	180	107	218	170	112,5	M12x20	14	M10x20 (n.7)	44	41	20
	45	14	48	22,3	42																						
IS102/IS103	45	14	49	22,3	50	100	50 k6	14	54	M16	37	70	137	275	426	217,5	210	119	278	180	130	M16x26	22	M12x22 (n.7)	50	50	20
	50	14	54	25	50																						
IS122/IS123	60	18	64	28	70	120	60 m6	18	64	M20	43	100	165	310	549	257	240	157	346	235	165	M16x30	22	M14x28 (n.7)	50	62	26

	G3	B2	D2	b2	t2	f2
IS052/IS053	227,5	50	24 j6	8	27	M8
IS062/IS063	248,5	50	24 j6	8	27	M8
IS082/IS083	320	60	28 j6	8	31	M10
IS102/IS103	330,5	60	28 j6	8	31	M10
IS122/IS123	383,5	80	38 k6	10	41	M12

3.1.5 IS 142...153

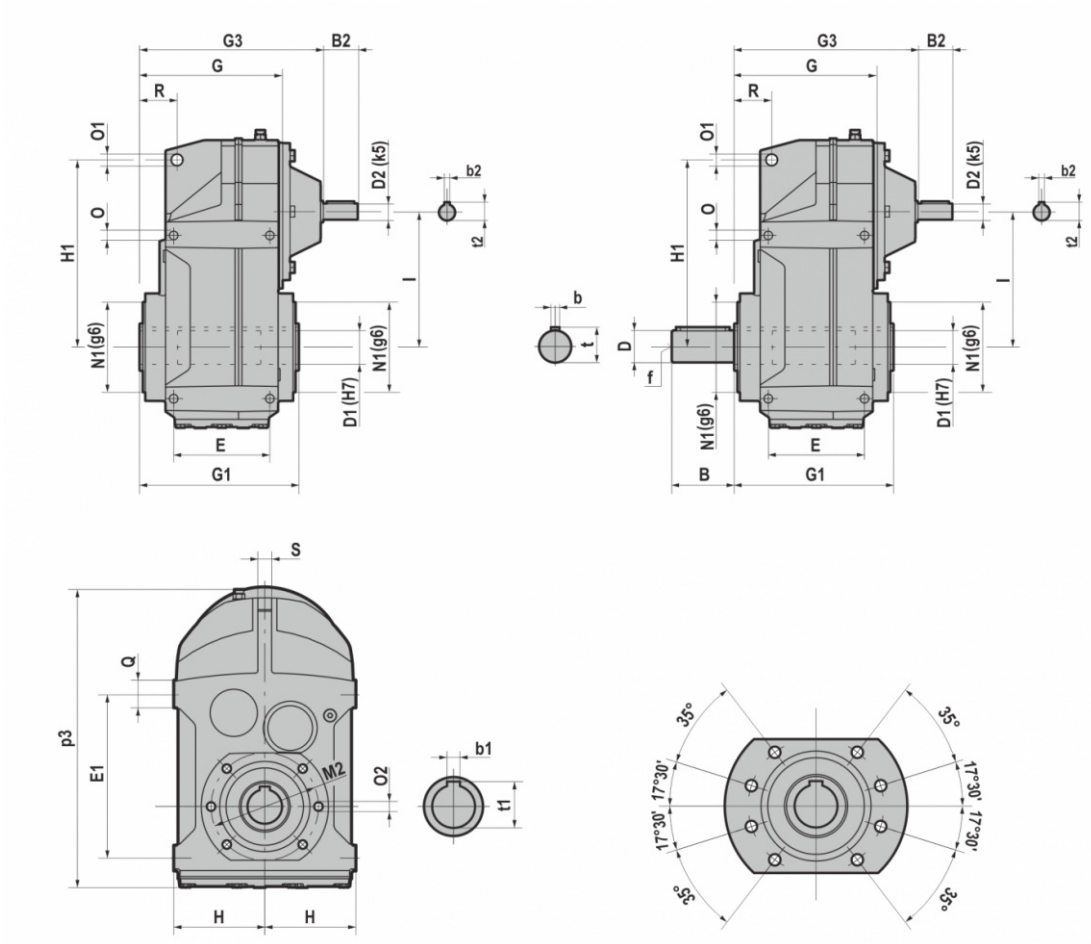

	D1	b1	t1	B	D	b	t	f	E	E1	G	G1	H	H1	I	N1	M2	O	O1	O2	p3	Q	R	S
IS142/IS143	70	20	74,9	140	70	20	74,5	M20	205	350	282	300	200	395	269	180	220	M20x28	26	M16x26	615	50	70	30
	65	18	69,4																					
IS152/IS153	90	25	95,4	140	70	20	74,5	M20	220	400	321,5	350	225	485	325	210	260	M24x36	26	M20x30	730	60	88	36
	80	22	85,4	170	90	25	95																	

	G3	D2	B2	b2	t2
IS142/IS143	362	38	80	10	41
IS152/IS153	422	42	110	12	45

3.2 MOTORES ELÉCTRICOS

3.2.1 Motores eléctricos

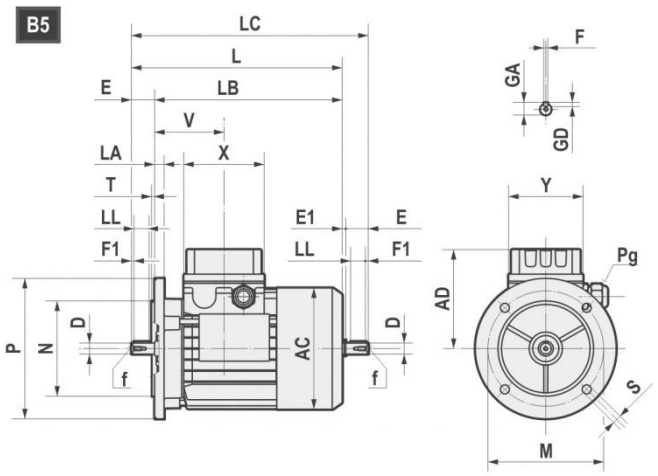

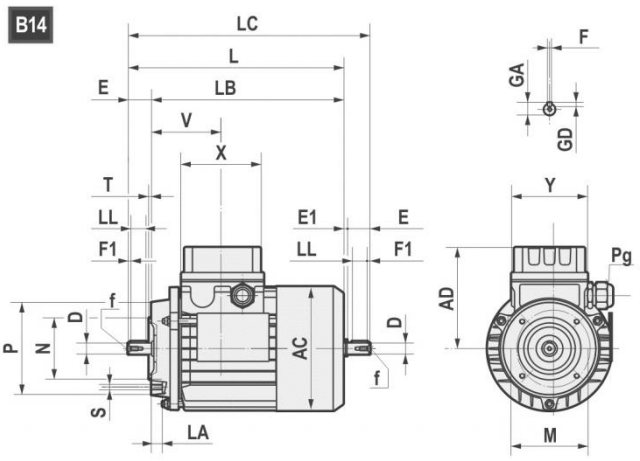

	AC	AD	L	LB	LC	X	Y	V	D	E	E1	f	F1	GA	F	GD
063	121	104	211	188	235,5	80	74	69	11 j6	23	1,5	M4x10	2,5	12,5	4	4
071	139	112	238,5	208,5	271	80	74	74,5	14 j6	30	2,5	M5x12.5	3	16	5	5
080	158	122	272,5 *(296)	232,5 *(256)	314 *(337)	80	74	78	19 j6	40	1,5	M6x16	5	21,5	6	6
90S	173	146	298 *(331)	248 *(281)	349,5 *(381)	98	98	89,5	24 j6	50	1,5	M8x19	5	27	8	7
90L	173	146	323 *(356)	273 *(306)	374,5 *(408)	98	98	89,5	24 j6	50	1,5	M8x19	5	27	8	7
100	191	155	368	308	431,5	98	98	97,5	28 j6	60	3,5	M10x22	7,5	31	8	7
112	211	170	382,5 *(408)	322,5 *(348)	447 *(472)	98	98	100	28 j6	60	3,5	M10x22	7,5	31	8	7
132S	249	195	452	372	536,5	118	118	115,5	38 k6	80	4	M12x28	10	41	10	8
132L	249	195	490	410	574,5	118	118	115,5	38 k6	80	4	M12x28	10	41	10	8
160S	249	195	520	410	/	118	118	115,5	42k6	100	/	M16x36	10	45	12	8

*TP80B4,TP90S4, TP90L4, TP90S6, TP112M4, TP112M6

B5	M	N	P	LA	S	T
063	115	95	140	10	9	3
071	130	110	160	10	9,5	3,5
080	165	130	200	12	11	3,5
090	165	130	200	12	11	3,5
100	215	180	250	15	14	4
112	215	180	250	14,5	14	4
132	265	230	300	20	14	3,5
160	300	250	350	13	18,5	3,5

B14	M	N	P	LA	S	T
063	75	60	90	10	M5	2,5
071	85	70	105	10,5	M6	2,5
080	100	80	120	10,5	M6	3
090	115	95	140	11,5	M8	3
100	130	110	160	15	M8	3,5
112	130	110	160	11,5	M8	3,5
132	165	130	200	20,5	M10	3,5
160	215	180	250	-	M12	4

3.2 MOTORES ELÉCTRICOS

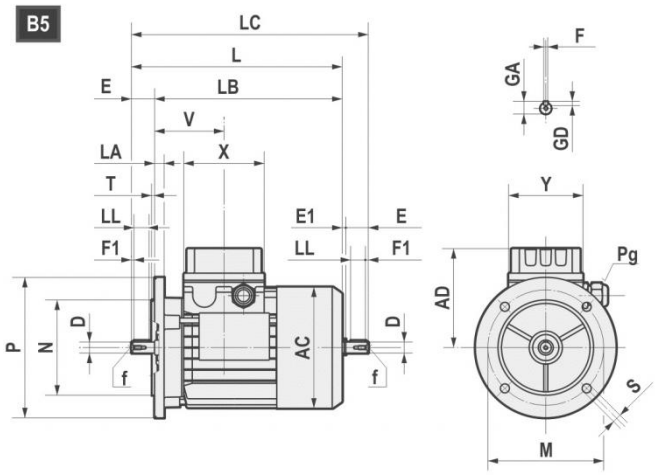

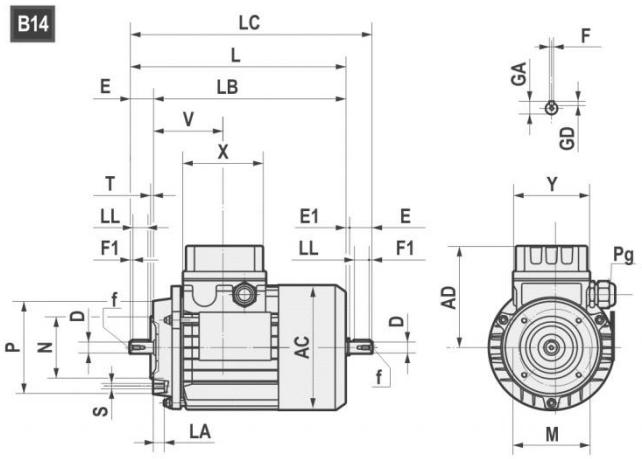

		AC	AD	L	LB	X	D	E	f	GA	F	GD	LL	Pg	
160M	2-4-6	314	251	600	490	158	42	110	M16	45	12	8	90	2-M40x1,5	1-M16x1,5
160L	2-4-6	314	251	645	535	158	42	110	M16	45	12	8	90	2-M40x1,5	1-M16x1,5
180M	2-4	355	267	680	570	158	48	110	M16	51,5	14	9	100	2-M40x1,5	1-M16x1,5
180L	4-6	355	267	720	610	158	48	110	M16	51,5	14	9	100	2-M40x1,5	1-M16x1,5
200L	2-4-6	397	300	785	675	187	55	110	M20	59	16	10	100	2-M50x1,5	1-M16x1,5
225S	4	446	325	820	680	187	60	140	M20	64	18	11	125	2-M50x1,5	1-M16x1,5
225M	2	446	325	815	705	187	55	110	M20	59	16	10	100	2-M50x1,5	1-M16x1,5
225M	4-6	446	325	845	705	187	60	140	M20	64	18	11	125	2-M50x1,5	1-M16x1,5
250M	2-4-6	485	360	910	770	238	60	140	M20	64	18	11	125	2-M63x1,5	1-M16x1,5
250M	2-4-6	485	360	910	770	238	65	140	M20	69	18	11	125	2-M63x1,5	1-M16x1,5
280S	2-4-6	547	390	970	830	238	65	140	M20	69	18	11	125	2-M63x1,5	1-M16x1,5
280S	2-4-6	547	390	970	830	238	75	140	M20	79,5	20	12	125	2-M63x1,5	1-M16x1,5
280M	2-4-6	547	390	1025	885	238	65	140	M20	69	18	11	125	2-M63x1,5	1-M16x1,5
280M	2-4-6	547	390	1025	885	238	75	140	M20	79,5	20	12	125	2-M63x1,5	1-M16x1,5

B5	M	N	P	LA	S	T
160	300	250	350	13	19	5
180	300	250	350	15	19	5
200	350	300	400	17	19	5
225	400	350	450	20	19	5
250	500	450	550	22	19	5
280	500	450	550	22	19	5

3.2.2 Motores de eficiencia estándar (TS), alta (TH) y premium (TP)

Los motores trifásicos de polaridad simple Motovario están disponibles en tres versiones diferentes (IE1-IE2-IE3) de acuerdo con la norma IEC 60034-30-1 (ver tabla). El rendimiento se calcula según el método establecido por la norma IEC 60034-2-1.

1. IE1: Serie TS de eficiencia estándar.
2. IE2: Serie TH de alta eficiencia.
3. IE3: Serie TP de eficiencia premium.

Tabla disponibilidad comercial Motovario

		NIVELES DE EFICIENCIA		
POTENCIAS NOMINALES [kW]	POLOS	IE1	IE2	IE3
0,09 ≤ Pn < 0,75	2 - 4 - 6	TS-TBS	-	-
0,75 ≤ Pn ≤ 11	2 - 4	TBS	-	-
0,75 ≤ Pn ≤ 5,5	6	TBS	TH-TBH	TP-TBP
0,75 ≤ Pn ≤ 9,2	2 - 4	-	TH-TBH	-
0,75 ≤ Pn ≤ 7,5	2 - 4	-	-	TP-TBP
11 ≤ Pn ≤ 37	2	TBS (*)	-	TP
11 ≤ Pn ≤ 55	4	TBS (*)	-	-
11 ≤ Pn ≤ 90	4	-	-	TP
7,5 ≤ Pn ≤ 22	6	TBS (*)	-	TP

(*) Series disponibles bajo pedido.

3.2.3 Potencia nominal - [kW]

	63A	63B	63C	71A	71B	71C	80A			80B		
Polos	TS	TS	TS	TS	TS	TS	TS	TH	TP	TS	TH	TP
2	0,18	0,25	0,37	0,37	0,55	-	-	0,75	0,75	-	1,1	1,1
4	0,12	0,18	0,22	0,25	0,37	0,55	0,55	-	-	-	0,75	0,75
6	0,09	0,12	0,15	0,18	0,25	0,37	0,37	-	-	0,55	-	-

	90S		90L		100LR	100L	100LA		112MR	112MS	112MA	112M
Polos	TH	TP	TH	TP	TP	TP	TH	TP	TP	TP	TH	TP
2	1,5	1,5	2,2	2,2	-	3	3	-	-	-	4	4
4	1,1	1,1	1,5	1,5	-	-	2,2	2,2	2,2	3	4	4
6	-	0,75	0,75	-	1,1	1,5	1,1	-	-	-	2,2	2,2

	112MR	112MS	132S	132SA	132MS	132SB	132M	132MA		132MB	
Polos	TP	TP	TP	TH	TP	TH	TP	TH	TP	TH	TP
2	-	-	5,5	5,5	-	7,5	7,5	9,2	-	-	-
4	2,2	3	-	5,5	5,5	-	7,5	7,5	-	-	-
6	-	-	3	3	-	-	-	4	4	5,5	5,5

	160M	160MA	160MB	160L	160LA	180M	180L
Polos	TP	TP	TP	TP	TP	TP	TP
2	-	11	15	18,5	-	22	-
4	-	11	-	-	15	18,5	22
6	7,5	-	-	11	-	-	15

	200L	200LA	200LB	225S	225M	250M	280S	280M
Polos	TP	TP	TP	TP	TP	TP	TP	TP
2	-	30	37	-	-	-	-	-
4	30	-	-	37	45	55	75	90
6	-	18,5	22	-	-	-	-	-

3.3 PESO

En las tablas ilustran las cantidades de lubricante de los reductores (excluyendo S140/S150 que se suministran sin lubricante).
*Peso sin motor.

* S-PS	063	071	080-090	100-112	132	160	180	200	225	
052-053	16	16,4	17	21,2	/	/	/	/	/	~ kg
062-063	/	19,9	20,6	24,9	/	/	/	/	/	
082-083	/	32,9	35	37	39,7	/	/	/	/	
102-103	/	44	46	48	50,7	57,4	57,4	/	/	
122-123	/	/	82	84,2	87	93	93	108	/	
142	/	/	/	/	172	180	180	183	/	
143	/	/	/	175	183	190	/	/	/	
152	/	/	/	/	/	255	255	258	264	
153	/	/	/	/	250	270	270	/	/	

IS	~ kg
052-053	19,2
062-063	22,7
082-083	39
102-103	50
122-123	91,8
142	155
143	165
152	220
153	240

	TS									
CS	063	071	080	090S	090L	100	112	132S	132M	
052-053	19,5	20,4	25,1	29	31	36,5	48	/	/	~ kg
062-063	/	23,9	28,7	32,6	34,6	40,1	51,6	/	/	
082-083	/	36,5	41,6	44	45,5	50,6	62	76	87,6	
102-103	/	47,5	52,6	55	56,5	61,6	73	87	98,6	
122-123	/	/	/	91	92	98	108	123	132	

	TH							
CS	080	090S	090L	100	112	132S	132M	
052-053	26,8	31,3	33	38,8	51,1	/	/	~ kg
062-063	30,4	34,9	36,6	42,4	54,7	/	/	
082-083	43,3	46,3	47,5	52,9	65,1	81,3	94,4	
102-103	54,3	57,3	58,5	63,9	76,1	92,3	105,4	
122-123	/	93,3	94	100,3	111,1	128,3	138,8	

	TBS									
CS	063	071	080	090S	090L	100	112	132S	132M	
052-053	21	22,6	28,6	34,5	36,5	42	57,7	/	/	~ kg
062-063	/	26,2	32,2	38,1	40,1	45,6	61,3	/	/	
082-083	/	38,7	45	49,5	51	56	71,7	86,3	102,3	
102-103	/	49,7	56	60,5	62	67	82,7	97,3	113,3	
122-123	/	/	/	96,5	97,5	103,5	117,7	133,3	146,7	

	TBH							
CS	080	090S	090L	100	112	132S	132M	
052-053	30,3	36,8	38,5	45,7	60,8	/	/	~ kg
062-063	33,9	40,4	42,1	49,3	64,4	/	/	
082-083	46,7	51,8	53	59,7	74,8	91,6	108,8	
102-103	57,7	62,8	64	70,7	85,8	102,6	119,8	
122-123	/	98,8	99,5	104	120,8	138,6	153,2	

3.4 EXTREMIDAD DEL EJE

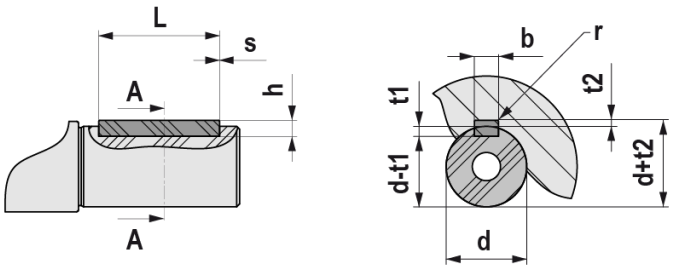

UNI 6604 - DIN 6885															
d			b x h			Tol. b / h	L		s min / max	b	t1	t2	Tol. t1 / t2	r max
	6	8	2	×	2	h9 / h9	6	20	0,16 0,25	2	1,2	1	0,1 0	0,08 0,16
>	8	10	3	×	3		6	36		3	1,8	1,4		
>	10	12	4	×	4		8	45		4	2,5	1,8		
>	12	17	5	×	5		10	56	0,25 0,4	5	3	2,3		0,16 0,25
>	17	22	6	×	6		14	70		6	3	2,8		
>	22	30	8	×	7	h9 / h11	18	90		8	4	3,3	0,2 0	
>	30	38	10	×	8		22	110	0,4 0,6	10	5	3,3		0,25 0,4
>	38	44	12	×	8		28	140		12	5	3,3		
>	44	50	14	×	9		36	160		14	5,5	3,8		
>	50	58	16	×	10		45	180		16	6	4,3		
>	58	65	18	×	11		50	200		18	7	4,4		
>	65	75	20	×	12		56	110	0,6 0,8	20	7,5	4,9		0,4 0,6
>	75	85	22	×	14		63	140		22	9	5,4		
>	85	95	25	×	14		70	160		25	9	5,4		
>	95	110	28	×	16		80	180		28	10	6,4		
>	110	130	32	×	18		90	200		32	11	7,4		
>	130	150	36	×	20		100	160	1 1,2	36	12	8,4	0,3 0	0,7 1
>	150	170	40	×	22		110	180		40	13	9,4		
>	170	200	45	×	25		125	200		45	14	10,4		

4.1 EJES LENTOS

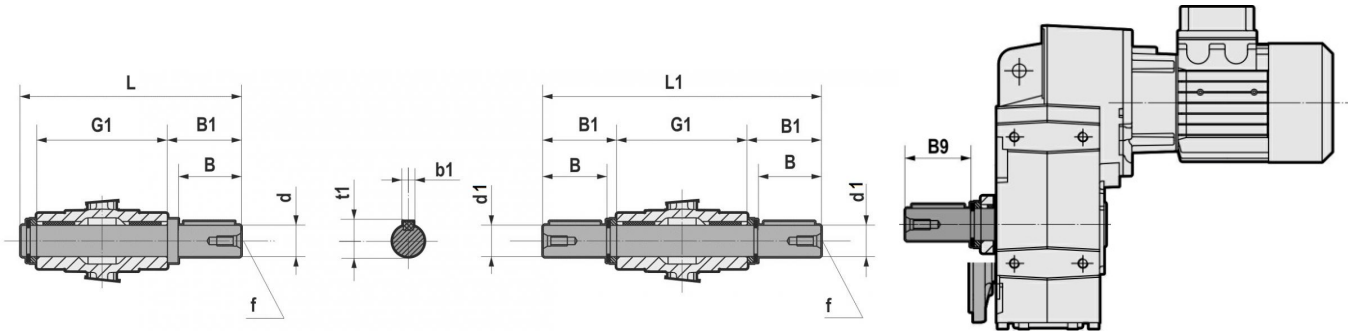

	d h6	B	B1	G1	L	f	b1	t1
S062/S063	35	58	62	140	210,5	M12	10	38
S082/S083	40	80	84,25	180	273	M16	12	43
S102/S103	50	100	105	210	325	M16	14	53,5
S122/S123	60	120	125	240	375	M20	18	64

	d k5	d1 h6	B	B1	B9	L1	f	b1	t1
S142/S143	70	70	140	150	197	600	M20	20	74,5
	65	65							69
S152/S153	90	90	170	180	221	710	M24	25	95
	80	80					M20	22	85

4.2 BRIDA DE SALIDA

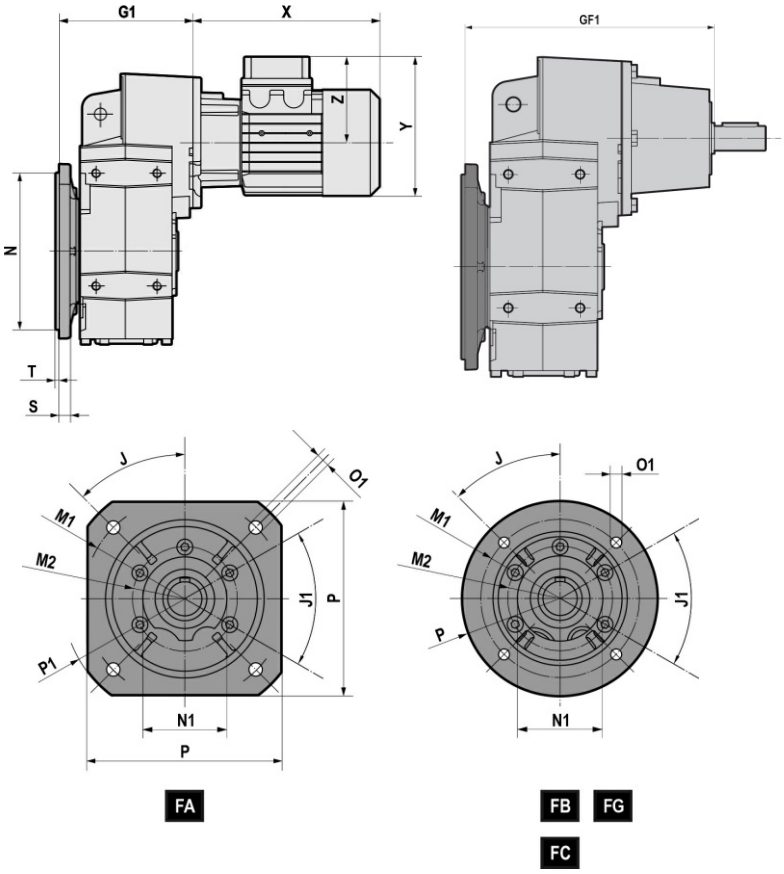

		J	J1	M1	M2	N f8	N1	O1	P	P1	S	T	G1	GF1
S052 S053	FA	45	45	215	105	180	90	14	200	250	12	4	153	243
	FB	45	45	165	105	130	90	11	200	/	12	3,5	153	243
S062 S063	FA	45	45	215	105	180	90	14	200	250	12	4	172,5	262,5
	FB	45	45	165	105	130	90	11	200	/	12	3,5	172,5	262,5
S082 S083	FA	45	45	265	130	230	110	14	250	300	15	4	227	340
	FB	45	45	215	130	180	110	14	250	/	15	4	227	340
	FC	45	45	165	130	130	110	11	200	/	15	3,5	227	340
S102 S103	FA	45	45	300	165	250	130	18	300	350	16	5	247,5	360,5
	FB	45	45	265	165	230	130	14	300	/	16	4	247,5	360,5
	FC	45	45	215	165	180	130	14	250	/	16	4	247,5	360,5
S122 S123	FA	45	45	350	185	300	150	18	350	400	18	5	287	413,5
	FB	45	45	300	185	250	150	18	350	/	18	5	287	413,5
	FC	45	45	265	185	230	150	14	300	/	18	4	287	413,5
S142 S143	FG	22°30′	/	400	/	350 g6	/	18	450	/	20	5	338,5	426
S152 S153	FG	22°30′	/	400	/	350 g6	/	18	450	/	20	5	372,5	481

4.3 SISTEMAS DE FIJACIÓN PENDULAR

4.3.1 Perno de reacción

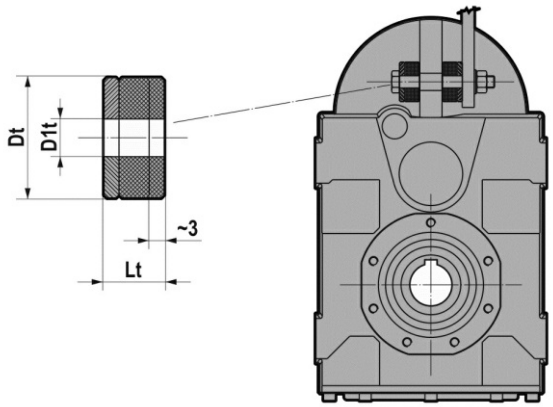

	Dt	D1t	Lt
S052/S053	40	12,5	20
S062/S063	40	12,5	20
S082/S083	40	12,5	20
S102/S103	60	21	30
S122/S123	60	21	30
S142/S143	60	25	38,8
S152/S153	60	25	35,5

4.3.2 Brazo de reacción - S 142...153

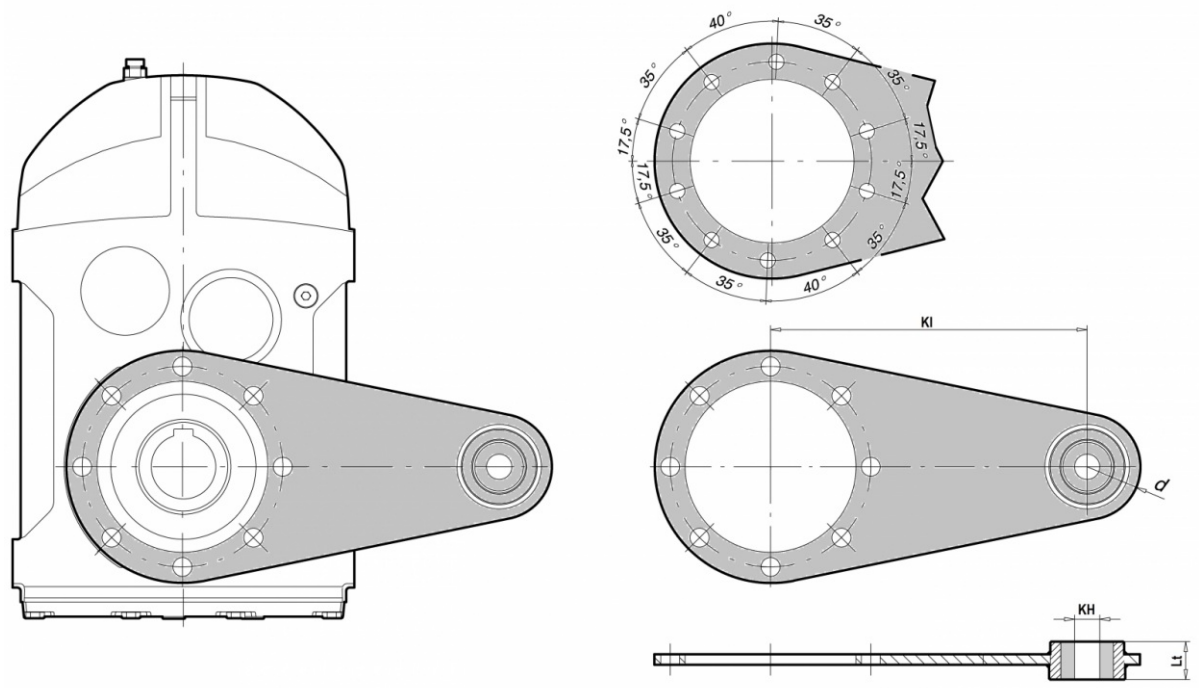

	Kl	KH	d	Lt
S142/S143	350	25	45	30
S152/S153	450	25	50	30

4.4 DISPOSITIVO ANTIRRETORNO

El reductor puede suministrarse con un dispositivo antirretorno en el eje veloz. El antirretorno permite la rotación de los ejes en un solo sentido, según el tamaño está disponible en la brida PAM o en el motor, sin incremento de dimensiones. Es muy importante especificar en el pedido el sentido de rotación requerido. El dispositivo antirretorno no está disponible para el montaje V5 posición con motor tamaño IEC 100...225.

SENTIDO DE ROTACIÓN LIBRE

S... 2/C-D-L

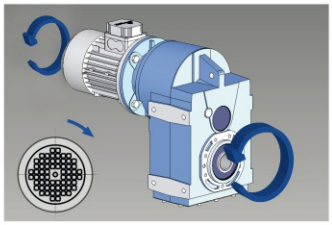

SENTIDO **HORARIO** REFERIDO AL EJE VELOZ

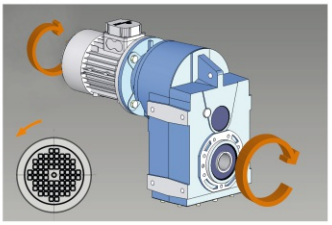

SENTIDO **ANTIHORARIO** REFERIDO AL EJE VELOZ

S... 3/C-D-L

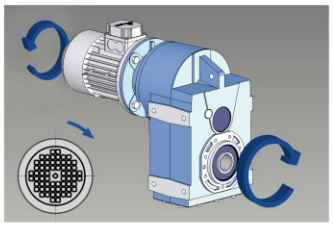

SENTIDO **HORARIO** REFERIDO AL EJE VELOZ

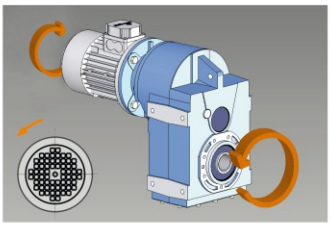

SENTIDO **ANTIHORARIO** REFERIDO AL EJE VELOZ

	063	071	080	090	100-112	132	160	180	200	225
	140x11	160x14	200x19	200x24	250x28	300x38	350x42	350x48	400x55	450x60
S052		B5	B5	B5	B5					
S053	B5	B5	B5	B5						
S062		B5	B5	B5	B5					
S063		B5	B5	B5						
S082			B5	B5	B5	B5				
S083		B5	B5	B5	B5					
S102			B5	B5	B5	B5	B5			
S103		B5	B5	B5	B5					
S122			B5	B5	B5	B5	B5	B5	B5	
S123			B5	B5	B5	B5				
S142						B5	B5	B5	B5	
S143					B5	B5	B5			
S152							B5	B5	B5	B5
S153						B5	B5	B5		

4.5 ARO DE APRIETE

Pulir y desengrasar las superficies de fijación. Respetar el par de apriete indicado para los tornillos (M_T).
El aro de apriete está diseñado solo para transmitir el par de salida.
En caso posiciones de montaje con cargas radiales y/o axiales contacte con el servicio técnico.

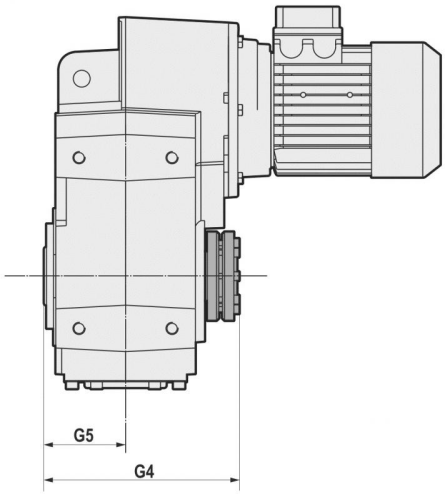

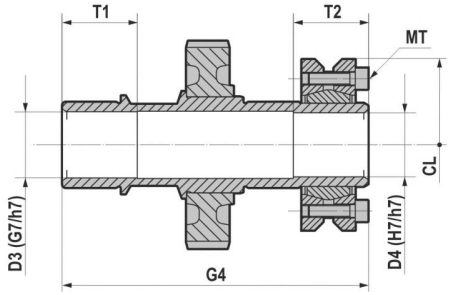

	D3	D4	G4	G5	T1	T2	CL	M_T 12.9 [Nm]
S052/S053	31	30	152	60	35	35	74	15
S062/S063	36	35	173	70	40	35	80	15
S082/S083	41	40	217	90	50	40	100	15
S102/S103	51	50	248	105	55	40	115	15
S122/S123	61	60	282	120	60	50	145	40

	D3 - D4 (H7/h6)	G4	CL	MT 12.9 [Nm]
S142-S143	75	345	155	70
S152-S153	95	405	200	103
	80		185	

4.6 RETENES REFORZADOS

Los retenes reforzados de efectúan mediante retén estándar con anillo VRM.
Bajo pedido el reductor puede suministrarse con retenes de fluoroelastómero FPM (FKM).

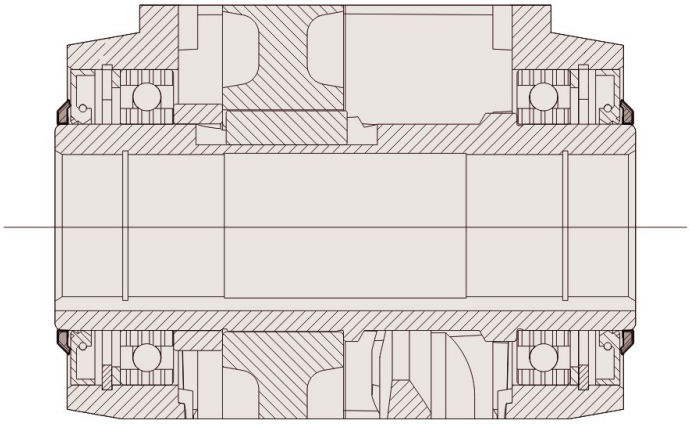

4.7 KIT DE MONTAJE/DESMONTAJE

Kit de montaje/desmontaje de los reductores con eje hueco y chaveta. Bajo pedido el suministro comprende:

1. Tornillo de fijación
2. Anillo de retención
3. Tuerca de fijación
4. Arandela de empuje

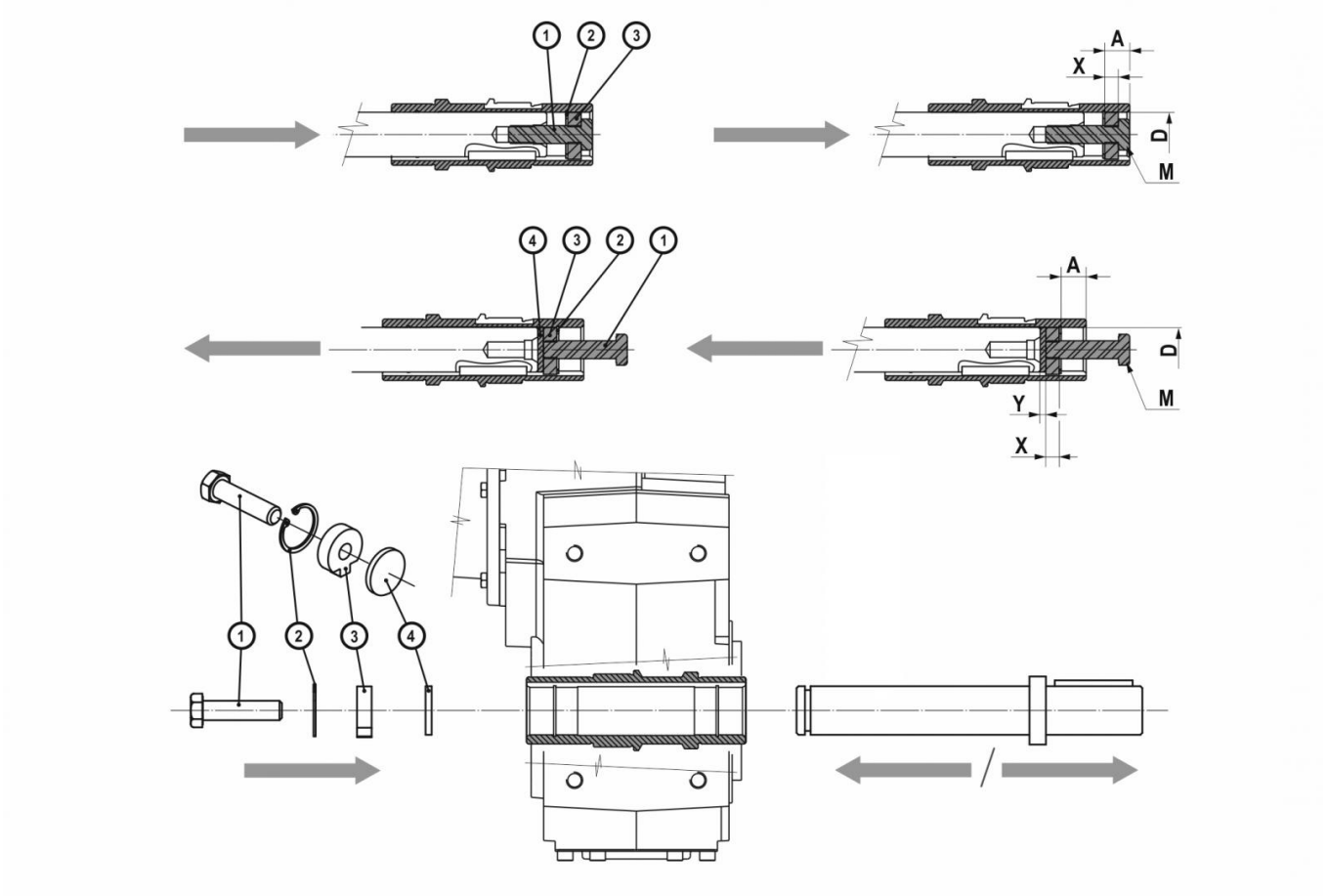

	D	A	X	Y	M
S052/S053	30	13,8	10	5	M10x35
S062/S063	35	12	12	5	M16x50
S082/S083	40	22,25	12	5	M16x50
	45				
S102/S103	50	25	12	5	M16x50
S122/S123	60	28	16	5	M20x70

5.1 S MOTORREDUCTORES (50Hz)

0.09 kW

n2 [rpm]	M2 [Nm]	fs	i	Reductor	Motor	Fr2 D [N]	Fr2 C-L [N]
7.3	111	3.3	117.48	S053	63A6	6000	6000
6.3	130	2.8	137.45	S053	63A6	6000	6000
4.8	168	2.2	177.55	S053	63A6	6000	6000
4.3	188	2.0	198.45	S053	63A6	6000	6000
4.0	207	1.8	217.64	S053	63A6	6000	6000
3.4	243	1.5	256.33	S053	63A6	6000	6000
2.7	298	1.2	314.21	S053	63A6	6000	6000

0.12 kW

n2 [rpm]	M2 [Nm]	fs	i	Reductor	Motor	Fr2 D [N]	Fr2 C-L [N]
11.6	94	3.9	74.20	S053	63B6	6000	6000
11.4	94	3.7	117.48	S053	63A4	6000	6000
11.0	99	3.7	78.14	S053	63B6	6000	6000
9.7	111	3.2	137.45	S053	63A4	6000	6000
9.0	121	3.0	95.84	S053	63B6	6000	6000
7.5	143	2.5	177.55	S053	63A4	6000	6000
7.3	149	2.5	117.48	S053	63B6	6000	6000
6.8	160	2.2	198.45	S053	63A4	6000	6000
6.3	174	2.1	137.45	S053	63B6	6000	6000
6.2	175	2.0	217.64	S053	63A4	6000	6000
5.2	206	1.7	256.33	S053	63A4	6000	6000
4.8	225	1.6	177.55	S053	63B6	6000	6000
4.3	251	1.5	198.45	S053	63B6	6000	6000
4.3	253	1.4	314.21	S053	63A4	6000	6000
4.0	275	1.3	217.64	S053	63B6	6000	6000
3.4	324	1.1	256.33	S053	63B6	6000	6000
2.7	398	0.9	314.21	S053	63B6	6000	6000

0.15 kW

n2 [rpm]	M2 [Nm]	fs	i	Reductor	Motor	Fr2 D [N]	Fr2 C-L [N]
14.0	97	3.8	57.79	S053	63C6	6000	6000
12.7	107	3.4	63.74	S053	63C6	6000	6000
10.9	125	2.9	74.20	S053	63C6	6000	6000
10.4	131	2.8	78.14	S053	63C6	6000	6000
8.5	161	2.3	95.84	S053	63C6	6000	6000
6.9	197	1.9	117.48	S053	63C6	6000	6000
5.9	231	1.6	137.45	S053	63C6	6000	6000
4.6	298	1.2	177.55	S053	63C6	6000	6000
4.1	333	1.1	198.45	S053	63C6	6000	6000
3.7	365	1.0	217.64	S053	63C6	6000	6000

5.1 S MOTORREDUCTORES (50Hz)

0.18 kW

n2 [rpm]	M2 [Nm]	fs	i	Reductor	Motor	Fr2 D [N]	Fr2 C-L [N]
20.4	77	3.4	137.45	S053	63A2	6000	6000
17.9	90	3.9	74.20	S053	63B4	6000	6000
17.2	97	3.8	52.25	S052	71A6	6000	6000
17.0	95	3.7	78.14	S053	63B4	6000	6000
15.8	99	2.7	177.55	S053	63A2	6000	6000
15.6	107	3.4	57.86	S052	71A6	6000	6000
15.6	105	3.5	57.79	S053	71A6	6000	6000
15.1	110	3.3	59.42	S052	71A6	6000	6000
14.1	116	3.2	63.74	S053	71A6	6000	6000
14.1	111	2.4	198.45	S053	63A2	6000	6000
13.9	116	3.0	95.84	S053	63B4	6000	6000
12.9	121	2.2	217.64	S053	63A2	6000	6000
12.4	135	2.7	72.83	S052	71A6	6000	6000
12.1	135	2.7	74.20	S053	71A6	6000	6000
11.5	142	2.6	78.14	S053	71A6	6000	6000
11.3	143	2.5	117.48	S053	63B4	6000	6000
10.9	143	1.8	256.33	S053	63A2	6000	6000
9.7	167	2.1	137.45	S053	63B4	6000	6000
9.4	174	2.1	95.84	S053	71A6	6000	6000
9.0	181	3.5	99.89	S063	71A6	10000	4000
8.9	175	1.5	314.21	S053	63A2	6000	6000
7.7	213	1.7	117.48	S053	71A6	6000	6000
7.5	216	1.6	177.55	S053	63B4	6000	6000
7.1	229	2.7	126.43	S063	71A6	10000	4000
6.7	241	1.5	198.45	S053	63B4	6000	6000
6.5	249	1.5	137.45	S053	71A6	6000	6000
6.1	264	1.3	217.64	S053	63B4	6000	6000
6.0	274	2.3	150.85	S063	71A6	10000	4000
5.7	288	3.6	158.76	S083	71A6	18000	7200
5.2	311	1.1	256.33	S053	63B4	6000	6000
5.1	322	1.1	177.55	S053	71A6	6000	6000
4.9	331	1.9	182.53	S063	71A6	10000	4000
4.9	336	1.9	185.05	S063	71A6	10000	4000
4.9	335	3.1	184.88	S083	71A6	18000	7200
4.5	360	1.0	198.45	S053	71A6	6000	6000
4.4	368	2.9	203.11	S083	71A6	18000	7200
4.4	372	2.8	205.34	S083	71A6	18000	7200
4.2	382	0.9	314.21	S053	63B4	6000	6000
4.1	395	0.9	217.64	S053	71A6	6000	6000
4.1	395	1.6	217.79	S063	71A6	10000	4000
4.0	410	2.6	226.04	S083	71A6	18000	7200
3.6	454	2.3	250.50	S083	71A6	18000	7200
3.4	484	1.3	267.16	S063	71A6	10000	4000
3.4	483	2.2	266.13	S083	71A6	18000	7200
3.3	497	3.4	274.20	S103	71A6	22000	9000

5.1 S MOTORREDUCTORES (50Hz)

0.18 kW

n2 [rpm]	M2 [Nm]	fs	i	Reductor	Motor	Fr2 D [N]	Fr2 C-L [N]
3.2	509	3.3	280.89	S103	71A6	22000	9000
3.1	530	2.0	292.36	S083	71A6	18000	7200
3.1	530	3.2	292.36	S103	71A6	22000	9000
2.9	573	1.8	315.73	S083	71A6	18000	7200
2.8	582	2.9	320.79	S103	71A6	22000	9000
2.6	627	2.7	345.60	S103	71A6	22000	9000
2.5	654	1.6	360.58	S083	71A6	18000	7200
2.3	716	2.3	394.69	S103	71A6	22000	9000

0.22 kW

n2 [rpm]	M2 [Nm]	fs	i	Reductor	Motor	Fr2 D [N]	Fr2 C-L [N]
20.9	95	3.7	63.74	S053	63C4	6000	6000
17.9	110	3.2	74.20	S053	63C4	6000	6000
17.0	116	3.0	78.14	S053	63C4	6000	6000
13.9	142	2.5	95.84	S053	63C4	6000	6000
11.3	174	2.0	117.48	S053	63C4	6000	6000
9.7	204	1.7	137.45	S053	63C4	6000	6000
7.5	264	1.3	177.55	S053	63C4	6000	6000
6.7	295	1.2	198.45	S053	63C4	6000	6000
6.1	323	1.1	217.64	S053	63C4	6000	6000
5.2	381	0.9	256.33	S053	63C4	6000	6000

0.25 kW

n2 [rpm]	M2 [Nm]	fs	i	Reductor	Motor	Fr2 D [N]	Fr2 C-L [N]
30.0	77	3.9	30.00	S052	71B6	6000	6000
29.2	74	3.5	95.84	S053	63B2	6000	6000
27.6	84	3.8	32.55	S052	71B6	6000	6000
27.3	85	3.7	33.00	S052	71B6	6000	6000
26.4	88	3.6	34.09	S052	71B6	6000	6000
24.7	92	4.0	36.50	S053	71B6	6000	6000
24.6	94	3.7	36.55	S052	71B6	6000	6000
24.1	93	3.8	57.79	S053	71A4	6000	6000
24.0	95	3.7	57.86	S052	71A4	6000	6000
23.8	91	2.9	117.48	S053	63B2	6000	6000
23.4	98	3.6	59.42	S052	71A4	6000	6000
23.2	100	3.5	38.75	S052	71B6	6000	6000
22.8	98	3.6	57.79	S053	63D4	6000	6000
22.6	103	3.6	39.90	S052	71B6	6000	6000
21.8	103	3.4	63.74	S053	71A4	6000	6000
21.1	110	3.4	42.63	S052	71B6	6000	6000
20.7	108	3.2	63.74	S053	63D4	6000	6000

5.1 S MOTORREDUCTORES (50Hz)

0.25 kW

n2 [rpm]	M2 [Nm]	fs	i	Reductor	Motor	Fr2 D [N]	Fr2 C-L [N]
20.4	106	2.5	137.45	S053	63B2	6000	6000
19.6	118	3.1	46.00	S052	71B6	6000	6000
19.1	121	3.0	47.20	S052	71B6	6000	6000
19.1	120	2.9	72.83	S052	71A4	6000	6000
19.1	119	3.1	47.14	S053	71B6	6000	6000
18.7	120	2.9	74.20	S053	71A4	6000	6000
17.8	126	2.8	74.20	S053	63D4	6000	6000
17.8	126	2.8	78.14	S053	71A4	6000	6000
17.2	134	2.7	52.25	S052	71B6	6000	6000
16.9	133	2.6	78.14	S053	63D4	6000	6000
15.8	137	1.9	177.55	S053	63B2	6000	6000
15.6	149	2.5	57.86	S052	71B6	6000	6000
15.6	146	2.5	57.79	S053	71B6	6000	6000
15.1	153	2.4	59.42	S052	71B6	6000	6000
14.5	155	2.3	95.84	S053	71A4	6000	6000
14.1	161	2.3	63.74	S053	71B6	6000	6000
14.1	153	1.7	198.45	S053	63B2	6000	6000
13.9	161	3.7	99.89	S063	71A4	10000	4000
13.8	163	2.1	95.84	S053	63D4	6000	6000
13.7	166	3.8	65.85	S063	71B6	10000	4000
13.3	174	3.6	67.47	S062	71B6	10000	4000
13.2	172	3.7	68.25	S063	71B6	10000	4000
12.9	168	1.6	217.64	S053	63B2	6000	6000
12.4	187	2.0	72.83	S052	71B6	6000	6000
12.2	185	3.4	73.63	S063	71B6	10000	4000
12.1	187	2.0	74.20	S053	71B6	6000	6000
11.8	190	1.8	117.48	S053	71A4	6000	6000
11.5	197	1.9	78.14	S053	71B6	6000	6000
11.2	200	1.8	117.48	S053	63D4	6000	6000
11.1	205	3.1	81.43	S063	71B6	10000	4000
11.0	204	2.9	126.43	S063	71A4	10000	4000
10.9	198	1.3	256.33	S053	63B2	6000	6000
10.1	222	1.6	137.45	S053	71A4	6000	6000
9.6	234	1.5	137.45	S053	63D4	6000	6000
9.4	241	1.5	95.84	S053	71B6	6000	6000
9.2	244	2.5	150.85	S063	71A4	10000	4000
9.0	252	2.5	99.89	S063	71B6	10000	4000
8.9	243	1.1	314.21	S053	63B2	6000	6000
8.8	256	3.9	158.76	S083	71A4	18000	7200
7.8	287	1.2	177.55	S053	71A4	6000	6000
7.7	296	1.2	117.48	S053	71B6	6000	6000
7.7	295	3.6	117.17	S083	71B6	18000	7200
7.6	295	2.0	182.53	S063	71A4	10000	4000
7.5	299	2.0	185.05	S063	71A4	10000	4000
7.5	299	3.4	184.88	S083	71A4	18000	7200

5.1 S MOTORREDUCTORES (50Hz)

0.25 kW

n2 [rpm]	M2 [Nm]	fs	i	Reductor	Motor	Fr2 D [N]	Fr2 C-L [N]
7.4	302	1.2	177.55	S053	63D4	6000	6000
7.1	318	2.0	126.43	S063	71B6	10000	4000
7.0	320	1.1	198.45	S053	71A4	6000	6000
7.0	324	3.2	128.73	S083	71B6	18000	7200
6.8	328	3.0	203.11	S083	71A4	18000	7200
6.8	332	3.0	205.34	S083	71A4	18000	7200
6.7	337	1.0	198.45	S053	63D4	6000	6000
6.6	343	3.1	136.34	S083	71B6	18000	7200
6.5	346	1.1	137.45	S053	71B6	6000	6000
6.4	351	1.0	217.64	S053	71A4	6000	6000
6.4	352	1.7	217.79	S063	71A4	10000	4000
6.1	370	0.9	217.64	S053	63D4	6000	6000
6.1	365	2.7	226.04	S083	71A4	18000	7200
6.0	380	1.7	150.85	S063	71B6	10000	4000
5.7	400	2.6	158.76	S083	71B6	18000	7200
5.5	404	2.5	250.50	S083	71A4	18000	7200
5.2	431	1.4	267.16	S063	71A4	10000	4000
5.2	430	2.3	266.13	S083	71A4	18000	7200
5.2	438	3.8	173.78	S103	71B6	22000	9000
5.1	443	3.6	274.20	S103	71A4	22000	9000
4.9	460	1.4	182.53	S063	71B6	10000	4000
4.9	466	1.4	185.05	S063	71B6	10000	4000
4.9	466	2.3	184.88	S083	71B6	18000	7200
4.9	454	3.5	280.89	S103	71A4	22000	9000
4.8	472	2.1	292.36	S083	71A4	18000	7200
4.8	475	3.5	188.51	S103	71B6	22000	9000
4.8	472	3.4	292.36	S103	71A4	22000	9000
4.4	512	2.1	203.11	S083	71B6	18000	7200
4.4	517	2.0	205.34	S083	71B6	18000	7200
4.4	510	2.0	315.73	S083	71A4	18000	7200
4.4	512	3.3	203.11	S103	71B6	22000	9000
4.3	518	3.1	320.79	S103	71A4	22000	9000
4.1	549	1.1	217.79	S063	71B6	10000	4000
4.0	569	1.8	226.04	S083	71B6	18000	7200
4.0	561	3.0	222.85	S103	71B6	22000	9000
4.0	566	3.0	224.76	S103	71B6	22000	9000
4.0	558	2.9	345.60	S103	71A4	22000	9000
3.9	582	1.7	360.58	S083	71A4	18000	7200
3.6	631	1.7	250.50	S083	71B6	18000	7200
3.5	637	2.5	394.69	S103	71A4	22000	9000
3.4	673	0.9	267.16	S063	71B6	10000	4000
3.4	670	1.6	266.13	S083	71B6	18000	7200
3.3	691	2.4	274.20	S103	71B6	22000	9000
3.2	707	2.4	280.89	S103	71B6	22000	9000
3.1	736	1.4	292.36	S083	71B6	18000	7200

5.1 S MOTORREDUCTORES (50Hz)

0.25 kW

n2 [rpm]	M2 [Nm]	fs	i	Reductor	Motor	Fr2 D [N]	Fr2 C-L [N]
3.1	736	2.3	292.36	S103	71B6	22000	9000
2.9	795	1.3	315.73	S083	71B6	18000	7200
2.8	808	2.1	320.79	S103	71B6	22000	9000
2.6	870	1.9	345.60	S103	71B6	22000	9000
2.5	908	1.2	360.58	S083	71B6	18000	7200
2.3	994	1.7	394.69	S103	71B6	22000	9000

0.37 kW

n2 [rpm]	M2 [Nm]	fs	i	Reductor	Motor	Fr2 D [N]	Fr2 C-L [N]
54.0	63	4.0	16.29	S052	71C6	5904	5904
50.5	68	3.7	18.63	S052	80A6	6000	6000
48.8	66	4.0	57.79	S053	71A2	6000	6000
48.7	67	3.9	57.86	S052	71A2	6000	6000
48.3	66	4.0	57.79	S053	63C2	6000	6000
47.6	72	3.5	19.73	S052	80A6	6000	6000
47.5	69	3.8	59.42	S052	71A2	6000	6000
47.2	73	3.5	18.63	S052	71C6	6000	6000
46.0	74	3.9	30.00	S052	71B4	6000	6000
44.7	77	3.6	21.04	S052	80A6	6000	6000
44.6	77	3.3	19.73	S052	71C6	6000	6000
44.2	72	3.6	63.74	S053	71A2	6000	6000
43.8	73	3.6	63.74	S053	63C2	6000	6000
43.7	78	3.5	21.53	S052	80A6	6000	6000
42.4	80	3.7	32.55	S052	71B4	6000	6000
41.8	82	3.3	21.04	S052	71C6	6000	6000
41.8	81	3.7	33.00	S052	71B4	6000	6000
40.9	84	3.3	21.53	S052	71C6	6000	6000
40.5	84	3.6	34.09	S052	71B4	6000	6000
39.1	88	3.1	24.07	S052	80A6	6000	6000
38.7	85	3.1	72.83	S052	71A2	6000	6000
38.0	84	3.1	74.20	S053	71A2	6000	6000
37.8	90	3.7	36.55	S052	71B4	6000	6000
37.8	88	4.0	36.50	S053	71B4	6000	6000
37.6	85	3.1	74.20	S053	63C2	6000	6000
37.3	92	3.3	25.20	S052	80A6	6000	6000
36.6	94	2.9	24.07	S052	71C6	6000	6000
36.5	94	3.2	25.79	S052	80A6	6000	6000
36.1	89	3.0	78.14	S053	71A2	6000	6000
35.7	90	2.9	78.14	S053	63C2	6000	6000
35.6	95	3.5	38.75	S052	71B4	6000	6000
34.9	98	3.1	25.20	S052	71C6	6000	6000
34.6	98	3.6	39.90	S052	71B4	6000	6000
34.1	100	3.0	25.79	S052	71C6	6000	6000

5.1 S MOTORREDUCTORES (50Hz)

0.37 kW

n2 [rpm]	M2 [Nm]	fs	i	Reductor	Motor	Fr2 D [N]	Fr2 C-L [N]
33.8	101	3.0	27.81	S052	80A6	6000	6000
32.4	105	3.3	42.63	S052	71B4	6000	6000
31.6	108	2.8	27.81	S052	71C6	6000	6000
31.3	109	2.8	30.00	S052	80A6	6000	6000
30.0	113	3.1	46.00	S052	71B4	6000	6000
29.4	109	2.4	95.84	S053	71A2	6000	6000
29.3	117	2.6	30.00	S052	71C6	6000	6000
29.3	113	3.1	47.14	S053	71B4	6000	6000
29.2	116	3.0	47.20	S052	71B4	6000	6000
29.1	110	2.4	95.84	S053	63C2	6000	6000
28.9	119	2.7	32.55	S052	80A6	6000	6000
28.5	120	2.6	33.00	S052	80A6	6000	6000
28.2	114	4.0	99.89	S063	71A2	10000	4000
27.6	124	2.5	34.09	S052	80A6	6000	6000
27.0	127	2.5	32.55	S052	71C6	6000	6000
26.7	128	2.5	33.00	S052	71C6	6000	6000
26.4	128	2.7	52.25	S052	71B4	6000	6000
25.8	133	2.4	34.09	S052	71C6	6000	6000
25.8	130	2.8	36.50	S053	80A6	6000	6000
25.7	133	2.6	36.55	S052	80A6	6000	6000
24.3	141	2.5	38.75	S052	80A6	6000	6000
24.1	142	2.4	36.55	S052	71C6	6000	6000
24.1	139	2.6	36.50	S053	71C6	6000	6000
24.0	134	2.0	117.48	S053	71A2	6000	6000
23.9	139	2.5	57.79	S053	71B4	6000	6000
23.8	142	2.5	57.86	S052	71B4	6000	6000
23.7	135	1.9	117.48	S053	63C2	6000	6000
23.6	145	2.5	39.90	S052	80A6	6000	6000
23.2	146	2.4	59.42	S052	71B4	6000	6000
22.7	151	2.3	38.75	S052	71C6	6000	6000
22.3	144	3.1	126.43	S063	71A2	10000	4000
22.1	155	2.4	39.90	S052	71C6	6000	6000
22.1	155	2.4	42.63	S052	80A6	6000	6000
21.6	153	2.3	63.74	S053	71B4	6000	6000
21.5	159	4.0	43.64	S062	80A6	10000	4000
21.0	158	3.8	65.85	S063	71B4	10000	4000
20.6	166	2.2	42.63	S052	71C6	6000	6000
20.5	156	1.7	137.45	S053	71A2	6000	6000
20.5	166	3.6	67.47	S062	71B4	10000	4000
20.4	168	2.2	46.00	S052	80A6	6000	6000
20.4	168	3.7	46.10	S062	80A6	10000	4000
20.3	158	1.7	137.45	S053	63C2	6000	6000
20.2	170	3.7	43.64	S062	71C6	10000	4000
20.2	164	3.7	68.25	S063	71B4	10000	4000
19.9	172	2.1	47.20	S052	80A6	6000	6000

5.1 S MOTORREDUCTORES (50Hz)

0.37 kW

n2 [rpm]	M2 [Nm]	fs	i	Reductor	Motor	Fr2 D [N]	Fr2 C-L [N]
19.9	168	2.2	47.14	S053	80A6	6000	6000
19.5	176	3.6	48.30	S062	80A6	10000	4000
19.1	179	2.1	46.00	S052	71C6	6000	6000
19.1	179	3.5	46.10	S062	71C6	10000	4000
19.1	175	3.6	49.13	S063	80A6	10000	4000
18.9	179	2.0	72.83	S052	71B4	6000	6000
18.7	180	2.0	47.14	S053	71C6	6000	6000
18.7	177	3.4	73.63	S063	71B4	10000	4000
18.7	171	2.6	150.85	S063	71A2	10000	4000
18.6	184	2.0	47.20	S052	71C6	6000	6000
18.6	179	2.0	74.20	S053	71B4	6000	6000
18.2	188	3.4	48.30	S062	71C6	10000	4000
18.0	190	1.9	52.25	S052	80A6	6000	6000
17.9	187	3.4	49.13	S063	71C6	10000	4000
17.7	188	1.9	78.14	S053	71B4	6000	6000
17.6	195	3.2	53.53	S062	80A6	10000	4000
17.1	200	3.1	55.00	S062	80A6	10000	4000
17.0	197	3.2	55.29	S063	80A6	10000	4000
16.9	196	3.1	81.43	S063	71B4	10000	4000
16.8	203	1.8	52.25	S052	71C6	6000	6000
16.4	208	3.0	53.53	S062	71C6	10000	4000
16.3	206	1.8	57.79	S053	80A6	6000	6000
16.2	211	1.7	57.86	S052	80A6	6000	6000
16.0	214	2.9	55.00	S062	71C6	10000	4000
16.0	210	3.0	58.72	S063	80A6	10000	4000
15.9	202	1.3	177.55	S053	71A2	6000	6000
15.9	211	3.0	55.29	S063	71C6	10000	4000
15.8	217	1.7	59.42	S052	80A6	6000	6000
15.7	204	1.3	177.55	S053	63C2	6000	6000
15.4	207	2.2	182.53	S063	71A2	10000	4000
15.3	210	3.6	184.88	S083	71A2	18000	7200
15.2	225	1.6	57.86	S052	71C6	6000	6000
15.2	220	1.7	57.79	S053	71C6	6000	6000
15.2	210	2.1	185.05	S063	71A2	10000	4000
15.0	224	2.8	58.72	S063	71C6	10000	4000
14.8	231	1.6	59.42	S052	71C6	6000	6000
14.7	227	1.6	63.74	S053	80A6	6000	6000
14.4	231	1.5	95.84	S053	71B4	6000	6000
14.3	235	2.7	65.85	S063	80A6	10000	4000
14.2	226	1.2	198.45	S053	71A2	6000	6000
14.1	228	1.2	198.45	S053	63C2	6000	6000
13.9	246	2.6	67.47	S062	80A6	10000	4000
13.9	231	3.2	203.11	S083	71A2	18000	7200
13.8	243	1.5	63.74	S053	71C6	6000	6000
13.8	244	2.6	68.25	S063	80A6	10000	4000

5.1 S MOTORREDUCTORES (50Hz)

0.37 kW

n2 [rpm]	M2 [Nm]	fs	i	Reductor	Motor	Fr2 D [N]	Fr2 C-L [N]
13.8	240	2.5	99.89	S063	71B4	10000	4000
13.7	233	3.2	205.34	S083	71A2	18000	7200
13.4	251	2.5	65.85	S063	71C6	10000	4000
13.0	247	1.1	217.64	S053	71A2	6000	6000
13.0	263	2.4	67.47	S062	71C6	10000	4000
12.9	265	1.4	72.83	S052	80A6	6000	6000
12.9	260	2.4	68.25	S063	71C6	10000	4000
12.9	248	1.8	217.79	S063	71A2	10000	4000
12.8	250	1.0	217.64	S053	63C2	6000	6000
12.8	263	2.4	73.63	S063	80A6	10000	4000
12.7	265	1.4	74.20	S053	80A6	6000	6000
12.7	265	4.0	74.18	S083	80A6	18000	7200
12.5	257	2.9	226.04	S083	71A2	18000	7200
12.1	284	1.3	72.83	S052	71C6	6000	6000
12.0	279	1.3	78.14	S053	80A6	6000	6000
12.0	281	2.2	73.63	S063	71C6	10000	4000
11.9	283	1.3	74.20	S053	71C6	6000	6000
11.8	282	3.5	117.17	S083	71B4	18000	7200
11.7	283	1.2	117.48	S053	71B4	6000	6000
11.5	291	2.2	81.43	S063	80A6	10000	4000
11.5	292	3.6	81.71	S083	80A6	18000	7200
11.3	298	1.2	78.14	S053	71C6	6000	6000
11.3	285	2.6	250.50	S083	71A2	18000	7200
10.9	304	2.0	126.43	S063	71B4	10000	4000
10.8	310	2.0	81.43	S063	71C6	10000	4000
10.7	310	3.2	128.73	S083	71B4	18000	7200
10.6	304	1.5	267.16	S063	71A2	10000	4000
10.6	302	2.5	266.13	S083	71A2	18000	7200
10.3	327	3.2	91.49	S083	80A6	18000	7200
10.3	312	3.9	274.20	S103	71A2	22000	9000
10.1	328	3.0	136.34	S083	71B4	18000	7200
10.0	331	1.1	137.45	S053	71B4	6000	6000
10.0	319	3.8	280.89	S103	71A2	22000	9000
9.8	342	1.1	95.84	S053	80A6	6000	6000
9.6	332	2.3	292.36	S083	71A2	18000	7200
9.6	332	3.6	292.36	S103	71A2	22000	9000
9.4	356	1.8	99.89	S063	80A6	10000	4000
9.3	359	2.9	100.62	S083	80A6	18000	7200
9.2	365	1.0	95.84	S053	71C6	6000	6000
9.1	363	1.7	150.85	S063	71B4	10000	4000
8.9	359	2.1	315.73	S083	71A2	18000	7200
8.8	381	1.7	99.89	S063	71C6	10000	4000
8.8	365	3.3	320.79	S103	71A2	22000	9000
8.7	382	2.6	158.76	S083	71B4	18000	7200
8.2	393	3.1	345.60	S103	71A2	22000	9000

5.1 S MOTORREDUCTORES (50Hz)

0.37 kW

n2 [rpm]	M2 [Nm]	fs	i	Reductor	Motor	Fr2 D [N]	Fr2 C-L [N]
8.0	418	2.5	117.17	S083	80A6	18000	7200
8.0	421	4.0	110.55	S103	71C6	22000	9000
7.9	418	3.8	173.78	S103	71B4	22000	9000
7.8	410	1.8	360.58	S083	71A2	18000	7200
7.7	433	3.9	121.29	S103	80A6	22000	9000
7.6	439	1.4	182.53	S063	71B4	10000	4000
7.5	445	1.3	185.05	S063	71B4	10000	4000
7.5	447	2.4	117.17	S083	71C6	18000	7200
7.5	445	2.2	184.88	S083	71B4	18000	7200
7.4	451	1.4	126.43	S063	80A6	10000	4000
7.3	459	2.3	128.73	S083	80A6	18000	7200
7.3	462	3.6	121.29	S103	71C6	22000	9000
7.3	459	3.7	128.73	S103	80A6	22000	9000
7.3	454	3.5	188.51	S103	71B4	22000	9000
7.1	449	2.7	394.69	S103	71A2	22000	9000
7.0	482	1.3	126.43	S063	71C6	10000	4000
6.9	487	2.2	136.34	S083	80A6	18000	7200
6.8	491	2.1	128.73	S083	71C6	18000	7200
6.8	489	2.0	203.11	S083	71B4	18000	7200
6.8	491	3.4	128.73	S103	71C6	22000	9000
6.8	489	3.3	203.11	S103	71B4	22000	9000
6.7	494	2.0	205.34	S083	71B4	18000	7200
6.7	504	3.3	141.24	S103	80A6	22000	9000
6.5	520	2.0	136.34	S083	71C6	18000	7200
6.3	524	1.1	217.79	S063	71B4	10000	4000
6.2	538	1.2	150.85	S063	80A6	10000	4000
6.2	538	3.1	141.24	S103	71C6	22000	9000
6.2	536	3.0	222.85	S103	71B4	22000	9000
6.1	544	1.8	226.04	S083	71B4	18000	7200
6.1	541	3.0	224.76	S103	71B4	22000	9000
5.9	567	1.9	158.76	S083	80A6	18000	7200
5.8	575	1.1	150.85	S063	71C6	10000	4000
5.5	605	1.7	158.76	S083	71C6	18000	7200
5.5	603	1.7	250.50	S083	71B4	18000	7200
5.4	620	2.7	173.78	S103	80A6	22000	9000
5.2	643	0.9	267.16	S063	71B4	10000	4000
5.2	641	1.6	266.13	S083	71B4	18000	7200
5.1	651	1.0	182.53	S063	80A6	10000	4000
5.1	660	1.0	185.05	S063	80A6	10000	4000
5.1	660	1.6	184.88	S083	80A6	18000	7200
5.1	662	2.5	173.78	S103	71C6	22000	9000
5.0	673	2.5	188.51	S103	80A6	22000	9000
5.0	660	2.4	274.20	S103	71B4	22000	9000
4.9	676	2.4	280.89	S103	71B4	22000	9000
4.8	696	0.9	182.53	S063	71C6	10000	4000

5.1 S MOTORREDUCTORES (50Hz)

0.37 kW

n2 [rpm]	M2 [Nm]	fs	i	Reductor	Motor	Fr2 D [N]	Fr2 C-L [N]
4.8	705	1.5	184.88	S083	71C6	18000	7200
4.7	704	1.4	292.36	S083	71B4	18000	7200
4.7	719	2.3	188.51	S103	71C6	22000	9000
4.7	704	2.3	292.36	S103	71B4	22000	9000
4.6	725	1.4	203.11	S083	80A6	18000	7200
4.6	733	1.4	205.34	S083	80A6	18000	7200
4.6	725	2.3	203.11	S103	80A6	22000	9000
4.4	760	1.3	315.73	S083	71B4	18000	7200
4.3	774	1.4	203.11	S083	71C6	18000	7200
4.3	783	1.3	205.34	S083	71C6	18000	7200
4.3	774	2.2	203.11	S103	71C6	22000	9000
4.3	772	2.1	320.79	S103	71B4	22000	9000
4.2	807	1.3	226.04	S083	80A6	18000	7200
4.2	795	2.1	222.85	S103	80A6	22000	9000
4.2	802	2.1	224.76	S103	80A6	22000	9000
4.0	832	1.9	345.60	S103	71B4	22000	9000
3.9	862	1.2	226.04	S083	71C6	18000	7200
3.9	850	2.0	222.85	S103	71C6	22000	9000
3.9	857	2.0	224.76	S103	71C6	22000	9000
3.9	853	3.7	238.93	S123	80A6	30000	11200
3.8	894	1.2	250.50	S083	80A6	18000	7200
3.8	868	1.2	360.58	S083	71B4	18000	7200
3.7	912	3.5	255.54	S123	80A6	30000	11200
3.5	955	1.1	250.50	S083	71C6	18000	7200
3.5	950	1.1	266.13	S083	80A6	18000	7200
3.5	950	1.7	394.69	S103	71B4	22000	9000
3.4	979	1.7	274.20	S103	80A6	22000	9000
3.4	1000	3.2	280.10	S123	80A6	30000	11200
3.3	1015	1.0	266.13	S083	71C6	18000	7200
3.3	1002	1.7	280.89	S103	80A6	22000	9000
3.2	1043	1.0	292.36	S083	80A6	18000	7200
3.2	1045	1.6	274.20	S103	71C6	22000	9000
3.2	1043	1.6	292.36	S103	80A6	22000	9000
3.1	1071	1.6	280.89	S103	71C6	22000	9000
3.1	1075	2.9	301.16	S123	80A6	30000	11200
3.0	1115	0.9	292.36	S083	71C6	18000	7200
3.0	1127	0.9	315.73	S083	80A6	18000	7200
3.0	1115	1.5	292.36	S103	71C6	22000	9000
2.9	1145	1.5	320.79	S103	80A6	22000	9000
2.7	1223	1.4	320.79	S103	71C6	22000	9000
2.7	1233	1.4	345.60	S103	80A6	22000	9000
2.7	1227	2.6	343.93	S123	80A6	30000	11200
2.5	1317	1.3	345.60	S103	71C6	22000	9000
2.4	1409	1.2	394.69	S103	80A6	22000	9000
2.2	1505	1.1	394.69	S103	71C6	22000	9000

5.1 S MOTORREDUCTORES (50Hz)

0.55 kW

n2 [rpm]	M2 [Nm]	fs	i	Reductor	Motor	Fr2 D [N]	Fr2 C-L [N]
107.8	47	3.8	8.63	S052	80B6	4719	4719
86.3	56	4.0	32.55	S052	71B2	5046	5046
85.2	57	3.9	33.00	S052	71B2	5066	5066
83.5	61	3.3	11.14	S052	80B6	5079	5079
82.4	59	3.8	34.09	S052	71B2	5113	5113
77.5	66	3.2	12.00	S052	80B6	5187	5187
76.9	63	3.9	36.55	S052	71B2	5215	5215
75.1	67	3.6	18.63	S052	80A4	5236	5236
73.5	69	3.5	18.63	S052	71C4	5267	5267
72.5	67	3.7	38.75	S052	71B2	5302	5302
71.0	71	3.4	19.73	S052	80A4	5320	5320
70.4	69	3.8	39.90	S052	71B2	5346	5346
69.4	73	3.3	19.73	S052	71C4	5352	5352
68.1	75	2.9	13.66	S052	80B6	5377	5377
66.6	76	3.4	21.04	S052	80A4	5415	5415
65.9	74	3.6	42.63	S052	71B2	5445	5445
65.1	77	3.4	21.04	S052	71C4	5448	5448
65.0	78	3.4	21.53	S052	80A4	5450	5450
63.6	79	3.3	21.53	S052	71C4	5482	5482
61.1	80	3.3	46.00	S052	71B2	5561	5561
60.9	84	3.0	15.27	S052	80B6	5544	5544
59.6	80	3.3	47.14	S053	71B2	5608	5608
59.5	82	3.2	47.20	S052	71B2	5600	5600
58.2	87	3.0	24.07	S052	80A4	5618	5618
57.1	89	2.8	16.29	S052	80B6	5641	5641
56.9	89	2.9	24.07	S052	71C4	5651	5651
55.6	91	3.2	25.20	S052	80A4	5688	5688
54.4	93	3.1	25.20	S052	71C4	5721	5721
54.3	93	3.1	25.79	S052	80A4	5723	5723
53.8	90	2.9	52.25	S052	71B2	5756	5756
53.1	95	3.1	25.79	S052	71C4	5756	5756
50.3	100	2.9	27.81	S052	80A4	5838	5838
49.9	102	2.5	18.63	S052	80B6	5846	5846
49.3	102	2.8	27.81	S052	71C4	5872	5872
48.6	100	2.6	57.86	S052	71B2	5915	5915
48.6	98	2.7	57.79	S053	71B2	5925	5925
47.3	103	2.6	59.42	S052	71B2	5956	5956
47.1	108	2.3	19.73	S052	80B6	5933	5933
46.7	108	2.7	30.00	S052	80A4	5955	5955
45.7	110	2.6	30.00	S052	71C4	5989	5989
44.2	115	2.4	21.04	S052	80B6	6000	6000
44.1	108	2.4	63.74	S053	71B2	6000	6000
43.2	118	2.3	21.53	S052	80B6	6000	6000
43.0	117	2.6	32.55	S052	80A4	6000	6000
42.4	119	2.5	33.00	S052	80A4	6000	6000

5.1 S MOTORREDUCTORES (50Hz)

0.55 kW

n2 [rpm]	M2 [Nm]	fs	i	Reductor	Motor	Fr2 D [N]	Fr2 C-L [N]
42.1	120	2.5	32.55	S052	71C4	6000	6000
41.7	117	3.9	67.47	S062	71B2	10000	4000
41.5	121	2.5	33.00	S052	71C4	6000	6000
41.2	116	3.9	68.25	S063	71B2	10000	4000
41.1	123	2.4	34.09	S052	80A4	6000	6000
40.2	125	2.4	34.09	S052	71C4	6000	6000
40.1	127	3.9	23.18	S062	80B6	10000	4000
39.2	130	3.8	23.75	S062	80B6	10000	4000
38.6	132	2.1	24.07	S052	80B6	6000	6000
38.6	126	2.1	72.83	S052	71B2	6000	6000
38.4	129	2.7	36.50	S053	80A4	6000	6000
38.3	132	2.5	36.55	S052	80A4	6000	6000
38.2	125	3.6	73.63	S063	71B2	10000	4000
37.9	126	2.1	74.20	S053	71B2	6000	6000
37.5	135	2.5	36.55	S052	71C4	6000	6000
37.5	132	2.7	36.50	S053	71C4	6000	6000
37.0	138	3.7	25.14	S062	80B6	10000	4000
36.9	138	2.2	25.20	S052	80B6	6000	6000
36.1	141	2.2	25.79	S052	80B6	6000	6000
36.1	140	2.4	38.75	S052	80A4	6000	6000
36.0	132	2.0	78.14	S053	71B2	6000	6000
35.4	143	2.3	38.75	S052	71C4	6000	6000
35.1	144	2.4	39.90	S052	80A4	6000	6000
34.5	138	3.3	81.43	S063	71B2	10000	4000
34.3	147	2.4	39.90	S052	71C4	6000	6000
33.6	151	3.3	27.66	S062	80B6	10000	4000
33.4	152	2.0	27.81	S052	80B6	6000	6000
32.8	154	2.3	42.63	S052	80A4	6000	6000
32.1	157	2.2	42.63	S052	71C4	6000	6000
32.1	157	3.8	43.64	S062	80A4	10000	4000
31.4	161	3.7	43.64	S062	71C4	10000	4000
31.0	164	1.9	30.00	S052	80B6	6000	6000
31.0	164	3.2	30.00	S062	80B6	10000	4000
30.4	166	2.1	46.00	S052	80A4	6000	6000
30.4	166	3.6	46.10	S062	80A4	10000	4000
29.8	169	2.1	46.00	S052	71C4	6000	6000
29.7	170	2.1	47.20	S052	80A4	6000	6000
29.7	166	2.1	47.14	S053	80A4	6000	6000
29.7	170	3.5	46.10	S062	71C4	10000	4000
29.3	163	1.6	95.84	S053	71B2	6000	6000
29.1	170	2.1	47.14	S053	71C4	6000	6000
29.0	174	2.0	47.20	S052	71C4	6000	6000
29.0	174	3.4	48.30	S062	80A4	10000	4000
28.6	178	1.8	32.55	S052	80B6	6000	6000
28.5	173	3.5	49.13	S063	80A4	10000	4000

5.1 S MOTORREDUCTORES (50Hz)

0.55 kW

n2 [rpm]	M2 [Nm]	fs	i	Reductor	Motor	Fr2 D [N]	Fr2 C-L [N]
28.4	178	3.4	48.30	S062	71C4	10000	4000
28.2	181	1.7	33.00	S052	80B6	6000	6000
28.1	169	2.7	99.89	S063	71B2	10000	4000
27.9	177	3.4	49.13	S063	71C4	10000	4000
27.7	180	3.5	33.57	S063	80B6	10000	4000
27.4	186	3.1	33.93	S062	80B6	10000	4000
27.3	187	1.7	34.09	S052	80B6	6000	6000
26.8	188	1.9	52.25	S052	80A4	6000	6000
26.2	192	1.8	52.25	S052	71C4	6000	6000
26.2	193	3.1	53.53	S062	80A4	10000	4000
25.6	197	3.0	53.53	S062	71C4	10000	4000
25.5	196	1.9	36.50	S053	80B6	6000	6000
25.5	198	3.0	55.00	S062	80A4	10000	4000
25.4	200	1.7	36.55	S052	80B6	6000	6000
25.4	200	3.1	36.57	S062	80B6	10000	4000
25.3	195	3.1	55.29	S063	80A4	10000	4000
24.9	202	3.0	55.00	S062	71C4	10000	4000
24.8	199	3.0	55.29	S063	71C4	10000	4000
24.6	203	3.1	37.77	S063	80B6	10000	4000
24.2	208	1.7	57.86	S052	80A4	6000	6000
24.2	204	1.7	57.79	S053	80A4	6000	6000
24.0	212	1.6	38.75	S052	80B6	6000	6000
24.0	199	3.8	117.17	S083	71B2	18000	7200
23.9	199	1.3	117.48	S053	71B2	6000	6000
23.8	207	2.9	58.72	S063	80A4	10000	4000
23.7	213	1.6	57.86	S052	71C4	6000	6000
23.7	208	1.7	57.79	S053	71C4	6000	6000
23.6	214	1.6	59.42	S052	80A4	6000	6000
23.6	216	2.9	39.38	S062	80B6	10000	4000
23.3	218	1.7	39.90	S052	80B6	6000	6000
23.3	212	2.8	58.72	S063	71C4	10000	4000
23.2	215	2.9	40.05	S063	80B6	10000	4000
23.1	219	1.6	59.42	S052	71C4	6000	6000
22.2	214	2.1	126.43	S063	71B2	10000	4000
22.0	225	1.6	63.74	S053	80A4	6000	6000
21.8	233	1.6	42.63	S052	80B6	6000	6000
21.8	218	3.4	128.73	S083	71B2	18000	7200
21.5	230	1.5	63.74	S053	71C4	6000	6000
21.3	239	2.6	43.64	S062	80B6	10000	4000
21.3	232	2.6	65.85	S063	80A4	10000	4000
20.8	243	2.5	67.47	S062	80A4	10000	4000
20.8	237	2.5	65.85	S063	71C4	10000	4000
20.6	231	3.2	136.34	S083	71B2	18000	7200
20.5	241	2.5	68.25	S063	80A4	10000	4000
20.4	233	1.1	137.45	S053	71B2	6000	6000

5.1 S MOTORREDUCTORES (50Hz)

0.55 kW

n2 [rpm]	M2 [Nm]	fs	i	Reductor	Motor	Fr2 D [N]	Fr2 C-L [N]
20.3	248	2.4	67.47	S062	71C4	10000	4000
20.2	252	1.5	46.00	S052	80B6	6000	6000
20.2	252	2.5	46.10	S062	80B6	10000	4000
20.1	246	2.4	68.25	S063	71C4	10000	4000
19.7	258	1.4	47.20	S052	80B6	6000	6000
19.7	253	1.5	47.14	S053	80B6	6000	6000
19.3	264	2.4	48.30	S062	80B6	10000	4000
19.2	262	1.3	72.83	S052	80A4	6000	6000
19.0	260	2.3	73.63	S063	80A4	10000	4000
18.9	262	1.3	74.20	S053	80A4	6000	6000
18.9	263	2.4	49.13	S063	80B6	10000	4000
18.9	262	3.8	74.18	S083	80A4	18000	7200
18.8	268	1.3	72.83	S052	71C4	6000	6000
18.6	265	2.3	73.63	S063	71C4	10000	4000
18.6	256	1.8	150.85	S063	71B2	10000	4000
18.5	267	1.3	74.20	S053	71C4	6000	6000
18.5	275	3.8	50.25	S082	80B6	18000	7200
17.9	276	1.3	78.14	S053	80A4	6000	6000
17.8	286	1.3	52.25	S052	80B6	6000	6000
17.7	269	2.8	158.76	S083	71B2	18000	7200
17.5	282	1.2	78.14	S053	71C4	6000	6000
17.4	293	2.1	53.53	S062	80B6	10000	4000
17.2	287	2.1	81.43	S063	80A4	10000	4000
17.1	297	3.5	54.27	S082	80B6	18000	7200
17.1	288	3.5	81.71	S083	80A4	18000	7200
16.9	301	2.1	55.00	S062	80B6	10000	4000
16.8	296	2.1	55.29	S063	80B6	10000	4000
16.8	293	2.0	81.43	S063	71C4	10000	4000
16.1	317	1.2	57.86	S052	80B6	6000	6000
16.1	310	1.2	57.79	S053	80B6	6000	6000
15.8	315	2.0	58.72	S063	80B6	10000	4000
15.7	325	1.1	59.42	S052	80B6	6000	6000
15.4	309	1.5	182.53	S063	71B2	10000	4000
15.3	323	3.1	91.49	S083	80A4	18000	7200
15.2	314	1.4	185.05	S063	71B2	10000	4000
15.2	313	2.4	184.88	S083	71B2	18000	7200
15.0	339	3.1	61.98	S082	80B6	18000	7200
14.9	320	3.8	188.51	S103	71B2	22000	9000
14.6	342	1.1	63.74	S053	80B6	6000	6000
14.6	338	1.0	95.84	S053	80A4	6000	6000
14.3	345	1.0	95.84	S053	71C4	6000	6000
14.1	353	1.8	65.85	S063	80B6	10000	4000
14.0	352	1.7	99.89	S063	80A4	10000	4000
13.9	355	2.8	100.62	S083	80A4	18000	7200
13.8	369	1.7	67.47	S062	80B6	10000	4000

5.1 S MOTORREDUCTORES (50Hz)

0.55 kW

n2 [rpm]	M2 [Nm]	fs	i	Reductor	Motor	Fr2 D [N]	Fr2 C-L [N]
13.8	362	2.9	67.52	S083	80B6	18000	7200
13.8	344	2.2	203.11	S083	71B2	18000	7200
13.8	344	3.5	203.11	S103	71B2	22000	9000
13.7	360	1.7	99.89	S063	71C4	10000	4000
13.7	348	2.2	205.34	S083	71B2	18000	7200
13.6	366	1.7	68.25	S063	80B6	10000	4000
12.9	369	1.2	217.79	S063	71B2	10000	4000
12.8	399	0.9	72.83	S052	80B6	6000	6000
12.6	395	1.6	73.63	S063	80B6	10000	4000
12.6	378	3.2	222.85	S103	71B2	22000	9000
12.5	398	0.9	74.20	S053	80B6	6000	6000
12.5	398	2.6	74.18	S083	80B6	18000	7200
12.5	381	3.1	224.76	S103	71B2	22000	9000
12.4	383	2.0	226.04	S083	71B2	18000	7200
11.9	413	2.4	117.17	S083	80A4	18000	7200
11.7	422	2.4	117.17	S083	71C4	18000	7200
11.5	428	3.7	121.29	S103	80A4	22000	9000
11.4	437	1.4	81.43	S063	80B6	10000	4000
11.4	438	2.4	81.71	S083	80B6	18000	7200
11.4	436	3.8	81.39	S103	80B6	22000	9000
11.3	437	3.7	121.29	S103	71C4	22000	9000
11.2	425	1.8	250.50	S083	71B2	18000	7200
11.1	446	1.3	126.43	S063	80A4	10000	4000
10.9	454	2.2	128.73	S083	80A4	18000	7200
10.9	454	3.5	128.73	S103	80A4	22000	9000
10.8	456	1.3	126.43	S063	71C4	10000	4000
10.6	464	2.2	128.73	S083	71C4	18000	7200
10.6	451	1.7	266.13	S083	71B2	18000	7200
10.6	464	3.4	128.73	S103	71C4	22000	9000
10.4	481	3.5	89.77	S103	80B6	22000	9000
10.3	481	2.1	136.34	S083	80A4	18000	7200
10.2	491	2.1	91.49	S083	80B6	18000	7200
10.2	465	2.6	274.20	S103	71B2	22000	9000
10.0	491	2.0	136.34	S083	71C4	18000	7200
10.0	476	2.5	280.89	S103	71B2	22000	9000
9.9	498	3.2	141.24	S103	80A4	22000	9000
9.7	509	3.1	141.24	S103	71C4	22000	9000
9.6	496	1.5	292.36	S083	71B2	18000	7200
9.6	496	2.4	292.36	S103	71B2	22000	9000
9.3	536	1.2	99.89	S063	80B6	10000	4000
9.3	532	1.1	150.85	S063	80A4	10000	4000
9.3	537	3.1	100.15	S103	80B6	22000	9000
9.2	540	1.9	100.62	S083	80B6	18000	7200
9.1	544	1.1	150.85	S063	71C4	10000	4000
8.9	535	1.4	315.73	S083	71B2	18000	7200

5.1 S MOTORREDUCTORES (50Hz)

0.55 kW

n2 [rpm]	M2 [Nm]	fs	i	Reductor	Motor	Fr2 D [N]	Fr2 C-L [N]
8.8	560	1.8	158.76	S083	80A4	18000	7200
8.8	544	2.2	320.79	S103	71B2	22000	9000
8.6	572	1.7	158.76	S083	71C4	18000	7200
8.4	593	2.8	110.55	S103	80B6	22000	9000
8.1	613	2.6	173.78	S103	80A4	22000	9000
8.1	586	2.0	345.60	S103	71B2	22000	9000
7.9	628	1.7	117.17	S083	80B6	18000	7200
7.9	626	2.6	173.78	S103	71C4	22000	9000
7.8	611	1.2	360.58	S083	71B2	18000	7200
7.7	644	0.9	182.53	S063	80A4	10000	4000
7.7	650	2.6	121.29	S103	80B6	22000	9000
7.6	653	0.9	185.05	S063	80A4	10000	4000
7.6	652	1.5	184.88	S083	80A4	18000	7200
7.5	658	0.9	182.53	S063	71C4	10000	4000
7.4	678	0.9	126.43	S063	80B6	10000	4000
7.4	666	1.5	184.88	S083	71C4	18000	7200
7.4	665	2.4	188.51	S103	80A4	22000	9000
7.3	679	2.4	188.51	S103	71C4	22000	9000
7.2	690	1.5	128.73	S083	80B6	18000	7200
7.2	690	2.4	128.73	S103	80B6	22000	9000
7.1	669	1.8	394.69	S103	71B2	22000	9000
6.9	716	1.4	203.11	S083	80A4	18000	7200
6.9	716	2.2	203.11	S103	80A4	22000	9000
6.8	731	1.4	136.34	S083	80B6	18000	7200
6.8	724	1.4	205.34	S083	80A4	18000	7200
6.7	732	1.4	203.11	S083	71C4	18000	7200
6.7	740	1.4	205.34	S083	71C4	18000	7200
6.7	732	2.2	203.11	S103	71C4	22000	9000
6.6	757	2.2	141.24	S103	80B6	22000	9000
6.5	760	3.9	215.60	S123	80A4	30000	11200
6.3	786	2.0	222.85	S103	80A4	22000	9000
6.2	797	1.3	226.04	S083	80A4	18000	7200
6.2	793	2.0	224.76	S103	80A4	22000	9000
6.1	815	1.2	226.04	S083	71C4	18000	7200
6.1	803	2.0	222.85	S103	71C4	22000	9000
6.1	810	2.0	224.76	S103	71C4	22000	9000
6.1	812	3.9	151.43	S123	80B6	30000	11200
5.9	851	1.2	158.76	S083	80B6	18000	7200
5.9	843	3.6	238.93	S123	80A4	30000	11200
5.6	883	1.1	250.50	S083	80A4	18000	7200
5.5	903	1.1	250.50	S083	71C4	18000	7200
5.5	901	3.3	255.54	S123	80A4	30000	11200
5.4	932	1.8	173.78	S103	80B6	22000	9000
5.3	939	1.1	266.13	S083	80A4	18000	7200
5.2	952	3.3	177.53	S123	80B6	30000	11200

5.1 S MOTORREDUCTORES (50Hz)

0.55 kW

n2 [rpm]	M2 [Nm]	fs	i	Reductor	Motor	Fr2 D [N]	Fr2 C-L [N]
5.1	959	1.0	266.13	S083	71C4	18000	7200
5.1	967	1.7	274.20	S103	80A4	22000	9000
5.0	991	1.1	184.88	S083	80B6	18000	7200
5.0	988	1.6	274.20	S103	71C4	22000	9000
5.0	991	1.6	280.89	S103	80A4	22000	9000
5.0	988	3.0	280.10	S123	80A4	30000	11200
4.9	1011	1.7	188.51	S103	80B6	22000	9000
4.9	1012	1.6	280.89	S103	71C4	22000	9000
4.8	1031	1.0	292.36	S083	80A4	18000	7200
4.8	1031	1.6	292.36	S103	80A4	22000	9000
4.8	1043	3.0	194.59	S123	80B6	30000	11200
4.7	1054	0.9	292.36	S083	71C4	18000	7200
4.7	1054	1.5	292.36	S103	71C4	22000	9000
4.6	1089	1.0	203.11	S083	80B6	18000	7200
4.6	1089	1.5	203.11	S103	80B6	22000	9000
4.6	1062	2.8	301.16	S123	80A4	30000	11200
4.5	1101	1.0	205.34	S083	80B6	18000	7200
4.4	1131	1.4	320.79	S103	80A4	22000	9000
4.3	1156	1.4	320.79	S103	71C4	22000	9000
4.3	1156	2.7	215.60	S123	80B6	30000	11200
4.2	1195	1.4	222.85	S103	80B6	22000	9000
4.1	1205	1.4	224.76	S103	80B6	22000	9000
4.1	1219	1.3	345.60	S103	80A4	22000	9000
4.1	1213	2.5	343.93	S123	80A4	30000	11200
4.0	1246	1.3	345.60	S103	71C4	22000	9000
3.9	1281	2.5	238.93	S123	80B6	30000	11200
3.6	1370	2.3	255.54	S123	80B6	30000	11200
3.5	1422	1.1	394.69	S103	71C4	22000	9000
3.5	1392	1.1	394.69	S103	80A4	22000	9000
3.4	1470	1.1	274.20	S103	80B6	22000	9000
3.3	1506	1.1	280.89	S103	80B6	22000	9000
3.3	1502	2.1	280.10	S123	80B6	30000	11200
3.2	1568	1.1	292.36	S103	80B6	22000	9000
3.1	1615	2.0	301.16	S123	80B6	30000	11200
2.9	1720	1.0	320.79	S103	80B6	22000	9000
2.7	1853	0.9	345.60	S103	80B6	22000	9000
2.7	1844	1.7	343.93	S123	80B6	30000	11200

0.75 kW

n2 [rpm]	M2 [Nm]	fs	i	Reductor	Motor	Fr2 D [N]	Fr2 C-L [N]
142.4	47	3.9	19.73	S052	80A2	4284	4284
141.9	47	3.9	19.73	S052	71C2	4289	4289
133.6	50	3.9	21.04	S052	80A2	4364	4364

5.1 S MOTORREDUCTORES (50Hz)

0.75 kW

n2 [rpm]	M2 [Nm]	fs	i	Reductor	Motor	Fr2 D [N]	Fr2 C-L [N]
133.1	50	3.9	21.04	S052	71C2	4369	4369
130.5	51	3.8	21.53	S052	80A2	4393	4393
130.1	51	3.8	21.53	S052	71C2	4398	4398
125.7	55	3.5	11.14	S052	80B4	4430	4430
116.8	57	3.4	24.07	S052	80A2	4534	4534
116.7	59	3.4	12.00	S052	80B4	4523	4523
116.3	57	3.4	24.07	S052	71C2	4538	4538
111.5	60	3.7	25.20	S052	80A2	4593	4593
111.1	60	3.6	25.20	S052	71C2	4597	4597
109.0	61	3.6	25.79	S052	80A2	4622	4622
108.6	61	3.6	25.79	S052	71C2	4627	4627
106.7	65	2.7	8.63	S052	80C6	4633	4633
106.7	65	2.7	8.63	S052	90S6	4633	4633
102.5	67	3.1	13.66	S052	80B4	4688	4688
101.0	66	3.3	27.81	S052	80A2	4720	4720
100.7	66	3.3	27.81	S052	71C2	4725	4725
93.7	71	3.1	30.00	S052	80A2	4819	4819
93.3	71	3.1	30.00	S052	71C2	4824	4824
91.7	75	3.2	15.27	S052	80B4	4833	4833
86.3	77	2.9	32.55	S052	80A2	4927	4927
86.0	80	3.0	16.29	S052	80B4	4916	4916
86.0	77	2.9	32.55	S052	71C2	4932	4932
85.2	78	2.9	33.00	S052	80A2	4945	4945
84.8	78	2.9	33.00	S052	71C2	4950	4950
83.3	80	2.8	34.09	S052	80A2	4974	4974
82.6	84	2.4	11.14	S052	80C6	4964	4964
82.6	84	2.4	11.14	S052	90S6	4964	4964
82.1	81	2.8	34.09	S052	71C2	4993	4993
77.0	84	3.1	36.50	S053	80A2	5090	5090
76.9	86	2.9	36.55	S052	80A2	5082	5082
76.7	91	2.3	12.00	S052	80C6	5062	5062
76.7	91	2.3	12.00	S052	90S6	5062	5062
76.7	85	3.1	36.50	S053	71C2	5095	5095
76.6	87	2.9	36.55	S052	71C2	5086	5086
75.1	92	2.6	18.63	S052	80B4	5094	5094
72.5	92	2.7	38.75	S052	80A2	5160	5160
72.3	92	2.7	38.75	S052	71C2	5165	5165
71.0	97	2.5	19.73	S052	80B4	5170	5170
70.4	94	2.8	39.90	S052	80A2	5200	5200
70.2	95	2.8	39.90	S052	71C2	5205	5205
67.4	103	2.1	13.66	S052	80C6	5233	5233
67.4	103	2.1	13.66	S052	90S6	5233	5233
66.6	103	2.5	21.04	S052	80B4	5255	5255
65.9	101	2.6	42.63	S052	80A2	5289	5289
65.7	101	2.6	42.63	S052	71C2	5294	5294

5.1 S MOTORREDUCTORES (50Hz)

0.75 kW

n2 [rpm]	M2 [Nm]	fs	i	Reductor	Motor	Fr2 D [N]	Fr2 C-L [N]
65.0	106	2.5	21.53	S052	80B4	5286	5286
61.1	109	2.4	46.00	S052	80A2	5392	5392
60.9	109	2.4	46.00	S052	71C2	5397	5397
60.2	115	2.2	15.27	S052	80C6	5381	5381
60.2	115	2.2	15.27	S052	90S6	5381	5381
59.6	109	2.4	47.14	S053	80A2	5439	5439
59.5	111	2.4	47.20	S052	80A2	5427	5427
59.4	109	2.4	47.14	S053	71C2	5444	5444
59.3	112	2.3	47.20	S052	71C2	5432	5432
58.2	118	2.2	24.07	S052	80B4	5435	5435
58.2	114	3.9	48.30	S062	80A2	9801	3920
58.0	114	3.9	48.30	S062	71C2	9811	3924
57.7	120	3.9	15.94	S062	80C6	9788	3915
57.7	120	3.9	15.94	S062	90S6	9788	3915
57.2	114	4.0	49.13	S063	80A2	9863	3945
57.0	114	3.9	49.13	S063	71C2	9873	3949
56.9	122	3.9	16.16	S062	80C6	9827	3931
56.9	122	3.9	16.16	S062	90S6	9827	3931
56.5	123	2.0	16.29	S052	80C6	5467	5467
56.5	123	2.0	16.29	S052	90S6	5467	5467
55.7	123	3.9	25.14	S062	80B4	9895	3958
55.6	124	2.3	25.20	S052	80B4	5496	5496
54.3	127	2.3	25.79	S052	80B4	5527	5527
53.8	123	2.1	52.25	S052	80A2	5565	5565
53.6	124	2.1	52.25	S052	71C2	5570	5570
52.5	126	3.6	53.53	S062	80A2	10000	4000
52.3	127	3.5	53.53	S062	71C2	10000	4000
51.1	130	3.5	55.00	S062	80A2	10000	4000
50.9	130	3.5	55.00	S062	71C2	10000	4000
50.8	128	3.5	55.29	S063	80A2	10000	4000
50.6	136	3.5	27.66	S062	80B4	10000	4000
50.6	128	3.5	55.29	S063	71C2	10000	4000
50.3	137	2.1	27.81	S052	80B4	5627	5627
49.4	141	1.8	18.63	S052	80C6	5644	5644
49.4	141	1.8	18.63	S052	90S6	5644	5644
48.6	137	1.9	57.86	S052	80A2	5703	5703
48.6	134	2.0	57.79	S053	80A2	5718	5718
48.5	134	2.0	57.79	S053	71C2	5723	5723
48.4	137	1.9	57.86	S052	71C2	5708	5708
47.9	136	3.3	58.72	S063	80A2	10000	4000
47.7	146	3.2	19.29	S062	80C6	10000	4000
47.7	146	3.2	19.29	S062	90S6	10000	4000
47.7	136	3.3	58.72	S063	71C2	10000	4000
47.3	140	1.9	59.42	S052	80A2	5739	5739
47.1	141	1.9	59.42	S052	71C2	5744	5744

5.1 S MOTORREDUCTORES (50Hz)

0.75 kW

n2 [rpm]	M2 [Nm]	fs	i	Reductor	Motor	Fr2 D [N]	Fr2 C-L [N]
47.1	148	3.3	19.55	S062	80C6	10000	4000
47.1	148	3.3	19.55	S062	90S6	10000	4000
46.7	147	2.0	30.00	S052	80B4	5727	5727
46.7	147	3.4	30.00	S062	80B4	10000	4000
46.6	149	1.7	19.73	S052	80C6	5719	5719
46.6	149	1.7	19.73	S052	90S6	5719	5719
44.1	147	1.8	63.74	S053	80A2	5852	5852
43.9	148	1.8	63.74	S053	71C2	5857	5857
43.7	159	1.7	21.04	S052	80C6	5803	5803
43.7	159	1.7	21.04	S052	90S6	5803	5803
43.0	160	1.9	32.55	S052	80B4	5834	5834
42.7	163	1.7	21.53	S052	80C6	5833	5833
42.7	163	1.7	21.53	S052	90S6	5833	5833
42.7	152	3.0	65.85	S063	80A2	10000	4000
42.5	153	2.9	65.85	S063	71C2	10000	4000
42.4	162	1.9	33.00	S052	80B4	5852	5852
41.7	159	2.8	67.47	S062	80A2	10000	4000
41.7	161	3.7	33.57	S063	80B4	10000	4000
41.5	160	2.8	67.47	S062	71C2	10000	4000
41.3	167	3.2	33.93	S062	80B4	10000	4000
41.2	158	2.9	68.25	S063	80A2	10000	4000
41.1	167	1.8	34.09	S052	80B4	5894	5894
41.0	158	2.8	68.25	S063	71C2	10000	4000
39.7	175	2.8	23.18	S062	80C6	10000	4000
39.7	175	2.8	23.18	S062	90S6	10000	4000
38.7	179	2.8	23.75	S062	80C6	10000	4000
38.7	179	2.8	23.75	S062	90S6	10000	4000
38.6	172	1.5	72.83	S052	80A2	6000	6000
38.4	173	1.5	72.83	S052	71C2	6000	6000
38.4	176	2.0	36.50	S053	80B4	6000	6000
38.3	179	1.8	36.55	S052	80B4	5983	5983
38.3	180	3.3	36.57	S062	80B4	10000	4000
38.2	182	1.5	24.07	S052	80C6	5976	5976
38.2	182	1.5	24.07	S052	90S6	5976	5976
38.2	170	2.6	73.63	S063	80A2	10000	4000
38.0	171	2.6	73.63	S063	71C2	10000	4000
37.9	172	1.5	74.20	S053	80A2	6000	6000
37.7	172	1.5	74.20	S053	71C2	6000	6000
37.1	182	3.3	37.77	S063	80B4	10000	4000
36.6	190	2.7	25.14	S062	80C6	10000	4000
36.6	190	2.7	25.14	S062	90S6	10000	4000
36.5	190	1.6	25.20	S052	80C6	6000	6000
36.5	190	1.6	25.20	S052	90S6	6000	6000
36.1	190	1.7	38.75	S052	80B4	6000	6000
36.0	181	1.5	78.14	S053	80A2	6000	6000

5.1 S MOTORREDUCTORES (50Hz)

0.75 kW

n2 [rpm]	M2 [Nm]	fs	i	Reductor	Motor	Fr2 D [N]	Fr2 C-L [N]
35.8	181	1.4	78.14	S053	71C2	6000	6000
35.7	195	1.6	25.79	S052	80C6	6000	6000
35.7	195	1.6	25.79	S052	90S6	6000	6000
35.6	193	3.1	39.38	S062	80B4	10000	4000
35.1	196	1.8	39.90	S052	80B4	6000	6000
35.0	193	3.1	40.05	S063	80B4	10000	4000
34.5	188	2.4	81.43	S063	80A2	10000	4000
34.4	189	2.4	81.43	S063	71C2	10000	4000
34.4	189	4.0	81.71	S083	80A2	18000	6781
33.3	209	2.4	27.66	S062	80C6	10000	4000
33.3	209	2.4	27.66	S062	90S6	10000	4000
33.1	210	1.5	27.81	S052	80C6	6000	6000
33.1	210	1.5	27.81	S052	90S6	6000	6000
32.8	209	1.7	42.63	S052	80B4	6000	6000
32.1	214	2.8	43.64	S062	80B4	10000	4000
30.7	226	1.3	30.00	S052	80C6	6000	6000
30.7	226	1.3	30.00	S052	90S6	6000	6000
30.7	226	2.3	30.00	S062	80C6	10000	4000
30.7	226	2.3	30.00	S062	90S6	10000	4000
30.7	212	3.5	91.49	S083	80A2	18000	7025
30.4	226	1.5	46.00	S052	80B4	6000	6000
30.4	226	2.7	46.10	S062	80B4	10000	4000
29.7	232	1.5	47.20	S052	80B4	6000	6000
29.7	227	1.5	47.14	S053	80B4	6000	6000
29.3	222	1.2	95.84	S053	80A2	6000	6000
29.2	222	1.2	95.84	S053	71C2	6000	6000
29.0	237	2.5	48.30	S062	80B4	10000	4000
28.5	236	2.5	49.13	S063	80B4	10000	4000
28.3	246	1.3	32.55	S052	80C6	6000	6000
28.3	246	1.3	32.55	S052	90S6	6000	6000
28.1	231	1.9	99.89	S063	80A2	10000	4000
28.0	232	1.9	99.89	S063	71C2	10000	4000
27.9	249	1.3	33.00	S052	80C6	6000	6000
27.9	249	1.3	33.00	S052	90S6	6000	6000
27.9	233	3.2	100.62	S083	80A2	18000	7200
27.4	248	2.5	33.57	S063	80C6	10000	4000
27.4	248	2.5	33.57	S063	90S6	10000	4000
27.1	256	2.2	33.93	S062	80C6	10000	4000
27.1	256	2.2	33.93	S062	90S6	10000	4000
27.0	257	1.2	34.09	S052	80C6	6000	6000
27.0	257	1.2	34.09	S052	90S6	6000	6000
26.8	257	1.4	52.25	S052	80B4	6000	6000
26.4	264	4.0	34.91	S082	80C6	18000	7200
26.4	264	4.0	34.91	S082	90S6	18000	7200
26.2	263	2.3	53.53	S062	80B4	10000	4000

5.1 S MOTORREDUCTORES (50Hz)

0.75 kW

n2 [rpm]	M2 [Nm]	fs	i	Reductor	Motor	Fr2 D [N]	Fr2 C-L [N]
25.9	268	3.9	35.50	S082	80C6	18000	7200
25.9	268	3.9	35.50	S082	90S6	18000	7200
25.8	267	3.8	54.27	S082	80B4	18000	7200
25.5	270	2.2	55.00	S062	80B4	10000	4000
25.3	266	2.3	55.29	S063	80B4	10000	4000
25.2	276	1.3	36.55	S052	80C6	6000	6000
25.2	276	1.3	36.55	S052	90S6	6000	6000
25.2	270	1.4	36.50	S053	80C6	6000	6000
25.2	270	1.4	36.50	S053	90S6	6000	6000
25.2	276	2.3	36.57	S062	80C6	10000	4000
25.2	276	2.3	36.57	S062	90S6	10000	4000
24.4	279	2.3	37.77	S063	80C6	10000	4000
24.4	279	2.3	37.77	S063	90S6	10000	4000
24.2	284	1.2	57.86	S052	80B4	6000	6000
24.2	278	1.3	57.79	S053	80B4	6000	6000
24.0	271	2.8	117.17	S083	80A2	18000	7200
23.9	272	2.8	117.17	S083	71C2	18000	7200
23.8	282	2.1	58.72	S063	80B4	10000	4000
23.7	293	1.2	38.75	S052	80C6	6000	6000
23.7	293	1.2	38.75	S052	90S6	6000	6000
23.6	292	1.2	59.42	S052	80B4	6000	6000
23.4	297	2.1	39.38	S062	80C6	10000	4000
23.4	297	2.1	39.38	S062	90S6	10000	4000
23.1	301	1.2	39.90	S052	80C6	6000	6000
23.1	301	1.2	39.90	S052	90S6	6000	6000
23.0	296	2.1	40.05	S063	80C6	10000	4000
23.0	296	2.1	40.05	S063	90S6	10000	4000
23.0	302	3.5	40.05	S082	80C6	18000	7200
23.0	302	3.5	40.05	S082	90S6	18000	7200
22.6	304	3.3	61.98	S082	80B4	18000	7200
22.2	292	1.5	126.43	S063	80A2	10000	4000
22.1	293	1.5	126.43	S063	71C2	10000	4000
22.0	307	1.1	63.74	S053	80B4	6000	6000
21.8	299	2.5	128.73	S083	71C2	18000	7200
21.8	298	2.5	128.73	S083	80A2	18000	7200
21.6	322	1.1	42.63	S052	80C6	6000	6000
21.6	322	1.1	42.63	S052	90S6	6000	6000
21.4	325	3.2	43.05	S082	90S6	18000	7200
21.4	325	3.2	43.05	S082	80C6	18000	7200
21.3	317	1.9	65.85	S063	80B4	10000	4000
21.1	329	1.9	43.64	S062	80C6	10000	4000
21.1	329	1.9	43.64	S062	90S6	10000	4000
20.8	331	1.8	67.47	S062	80B4	10000	4000
20.7	325	3.1	67.52	S083	80B4	18000	7200
20.6	315	2.4	136.34	S083	80A2	18000	7200

5.1 S MOTORREDUCTORES (50Hz)

0.75 kW

n2 [rpm]	M2 [Nm]	fs	i	Reductor	Motor	Fr2 D [N]	Fr2 C-L [N]
20.5	328	1.8	68.25	S063	80B4	10000	4000
20.5	316	2.4	136.34	S083	71C2	18000	7200
20.0	347	1.1	46.00	S052	80C6	6000	6000
20.0	347	1.1	46.00	S052	90S6	6000	6000
20.0	348	1.8	46.10	S062	80C6	10000	4000
20.0	348	1.8	46.10	S062	90S6	10000	4000
19.9	327	3.7	141.24	S103	80A2	22000	9000
19.8	328	3.7	141.24	S103	71C2	22000	9000
19.5	356	1.0	47.20	S052	80C6	6000	6000
19.5	356	1.0	47.20	S052	90S6	6000	6000
19.5	348	1.1	47.14	S053	80C6	6000	6000
19.5	348	1.1	47.14	S053	90S6	6000	6000
19.2	358	1.0	72.83	S052	80B4	6000	6000
19.0	365	1.7	48.30	S062	80C6	10000	4000
19.0	365	1.7	48.30	S062	90S6	10000	4000
19.0	354	1.7	73.63	S063	80B4	10000	4000
18.9	357	1.0	74.20	S053	80B4	6000	6000
18.9	357	2.8	74.18	S083	80B4	18000	7200
18.7	363	1.7	49.13	S063	80C6	10000	4000
18.7	363	1.7	49.13	S063	90S6	10000	4000
18.6	350	1.3	150.85	S063	71C2	10000	4000
18.6	349	1.3	150.85	S063	80A2	10000	4000
18.3	379	2.8	50.25	S082	80C6	18000	7200
18.3	379	2.8	50.25	S082	90S6	18000	7200
18.3	379	3.9	50.25	S102	80C6	22000	9000
18.3	379	3.9	50.25	S102	90S6	22000	9000
17.9	376	0.9	78.14	S053	80B4	6000	6000
17.7	367	2.0	158.76	S083	80A2	18000	7200
17.6	394	0.9	52.25	S052	80C6	6000	6000
17.6	394	0.9	52.25	S052	90S6	6000	6000
17.6	368	2.0	158.76	S083	71C2	18000	7200
17.2	404	1.6	53.53	S062	80C6	10000	4000
17.2	404	1.6	53.53	S062	90S6	10000	4000
17.2	392	1.5	81.43	S063	80B4	10000	4000
17.1	393	2.5	81.71	S083	80B4	18000	7200
17.0	410	2.6	54.27	S082	80C6	18000	7200
17.0	410	2.6	54.27	S082	90S6	18000	7200
16.7	415	1.5	55.00	S062	80C6	10000	4000
16.7	415	1.5	55.00	S062	90S6	10000	4000
16.7	416	3.3	55.14	S102	80C6	22000	9000
16.7	416	3.3	55.14	S102	90S6	22000	9000
16.6	409	1.5	55.29	S063	80C6	10000	4000
16.6	409	1.5	55.29	S063	90S6	10000	4000
16.2	402	3.0	173.78	S103	80A2	22000	9000
16.1	403	3.0	173.78	S103	71C2	22000	9000

5.1 S MOTORREDUCTORES (50Hz)

0.75 kW

n2 [rpm]	M2 [Nm]	fs	i	Reductor	Motor	Fr2 D [N]	Fr2 C-L [N]
15.7	434	1.5	58.72	S063	80C6	10000	4000
15.7	434	1.5	58.72	S063	90S6	10000	4000
15.6	432	3.7	89.77	S103	80B4	22000	9000
15.5	448	3.7	59.40	S102	80C6	22000	9000
15.5	448	3.7	59.40	S102	90S6	22000	9000
15.4	422	1.1	182.53	S063	80A2	10000	4000
15.3	424	1.1	182.53	S063	71C2	10000	4000
15.3	440	2.3	91.49	S083	80B4	18000	7200
15.2	428	1.1	185.05	S063	80A2	10000	4000
15.2	427	1.8	184.88	S083	80A2	18000	7200
15.1	429	1.0	185.05	S063	71C2	10000	4000
15.1	429	1.7	184.88	S083	71C2	18000	7200
14.9	437	2.7	188.51	S103	71C2	22000	9000
14.9	436	2.8	188.51	S103	80A2	22000	9000
14.8	468	2.2	61.98	S082	80C6	18000	7200
14.8	468	2.2	61.98	S082	90S6	18000	7200
14.0	487	1.3	65.85	S063	80C6	10000	4000
14.0	487	1.3	65.85	S063	90S6	10000	4000
14.0	480	1.2	99.89	S063	80B4	10000	4000
14.0	482	3.3	100.15	S103	80B4	22000	9000
13.9	484	2.1	100.62	S083	80B4	18000	7200
13.8	471	1.6	203.11	S083	71C2	18000	7200
13.8	470	1.6	203.11	S083	80A2	18000	7200
13.8	471	2.5	203.11	S103	71C2	22000	9000
13.8	470	2.6	203.11	S103	80A2	22000	9000
13.7	475	1.6	205.34	S083	80A2	18000	7200
13.6	509	1.2	67.47	S062	80C6	10000	4000
13.6	509	1.2	67.47	S062	90S6	10000	4000
13.6	499	2.1	67.52	S083	80C6	18000	7200
13.6	499	2.1	67.52	S083	90S6	18000	7200
13.6	476	1.6	205.34	S083	71C2	18000	7200
13.6	512	3.3	67.84	S102	80C6	22000	9000
13.6	512	3.3	67.84	S102	90S6	22000	9000
13.5	504	1.2	68.25	S063	80C6	10000	4000
13.5	504	1.2	68.25	S063	90S6	10000	4000
12.7	532	3.0	110.55	S103	80B4	22000	9000
12.6	517	2.3	222.85	S103	71C2	22000	9000
12.6	515	2.3	222.85	S103	80A2	22000	9000
12.5	544	1.2	73.63	S063	80C6	10000	4000
12.5	544	1.2	73.63	S063	90S6	10000	4000
12.5	522	2.3	224.76	S103	71C2	22000	9000
12.5	520	2.3	224.76	S103	80A2	22000	9000
12.4	548	1.9	74.18	S083	80C6	18000	7200
12.4	548	1.9	74.18	S083	90S6	18000	7200
12.4	524	1.4	226.04	S083	71C2	18000	7200

5.1 S MOTORREDUCTORES (50Hz)

0.75 kW

n2 [rpm]	M2 [Nm]	fs	i	Reductor	Motor	Fr2 D [N]	Fr2 C-L [N]
12.4	523	1.4	226.04	S083	80A2	18000	7200
12.4	548	3.1	74.18	S103	80C6	22000	9000
12.4	548	3.1	74.18	S103	90S6	22000	9000
11.9	564	1.8	117.17	S083	80B4	18000	7200
11.5	583	2.7	121.29	S103	80B4	22000	9000
11.3	602	1.0	81.43	S063	80C6	10000	4000
11.3	602	1.0	81.43	S063	90S6	10000	4000
11.3	604	1.7	81.71	S083	80C6	18000	7200
11.3	604	1.7	81.71	S083	90S6	18000	7200
11.3	602	2.8	81.39	S103	80C6	22000	9000
11.3	602	2.8	81.39	S103	90S6	22000	9000
11.2	581	1.3	250.50	S083	71C2	18000	7200
11.2	579	1.3	250.50	S083	80A2	18000	7200
11.1	608	1.0	126.43	S063	80B4	10000	4000
11.0	591	3.8	255.54	S123	80A2	30000	11200
10.9	619	1.6	128.73	S083	80B4	18000	7200
10.9	619	2.6	128.73	S103	80B4	22000	9000
10.6	615	1.2	266.13	S083	80A2	18000	7200
10.5	618	1.2	266.13	S083	71C2	18000	7200
10.3	656	1.5	136.34	S083	80B4	18000	7200
10.2	636	1.9	274.20	S103	71C2	22000	9000
10.2	634	1.9	274.20	S103	80A2	22000	9000
10.2	663	2.5	89.77	S103	80C6	22000	9000
10.2	663	2.5	89.77	S103	90S6	22000	9000
10.1	676	1.6	91.49	S083	80C6	18000	7200
10.1	676	1.6	91.49	S083	90S6	18000	7200
10.0	652	1.8	280.89	S103	71C2	22000	9000
10.0	649	1.8	280.89	S103	80A2	22000	9000
10.0	648	3.5	280.10	S123	80A2	30000	11200
9.9	679	2.4	141.24	S103	80B4	22000	9000
9.6	678	1.1	292.36	S083	71C2	18000	7200
9.6	676	1.1	292.36	S083	80A2	18000	7200
9.6	678	1.8	292.36	S103	71C2	22000	9000
9.6	676	1.8	292.36	S103	80A2	22000	9000
9.3	696	3.2	301.16	S123	80A2	30000	11200
9.2	740	2.3	100.15	S103	80C6	22000	9000
9.2	740	2.3	100.15	S103	90S6	22000	9000
9.1	744	1.4	100.62	S083	80C6	18000	7200
9.1	744	1.4	100.62	S083	90S6	18000	7200
8.9	733	1.0	315.73	S083	71C2	18000	7200
8.9	730	1.0	315.73	S083	80A2	18000	7200
8.8	764	1.3	158.76	S083	80B4	18000	7200
8.8	742	1.6	320.79	S103	80A2	22000	9000
8.7	744	1.6	320.79	S103	71C2	22000	9000
8.3	817	2.1	110.55	S103	80C6	22000	9000

5.1 S MOTORREDUCTORES (50Hz)

0.75 kW

n2 [rpm]	M2 [Nm]	fs	i	Reductor	Motor	Fr2 D [N]	Fr2 C-L [N]
8.3	817	2.1	110.55	S103	90S6	22000	9000
8.2	832	3.8	112.52	S123	80C6	30000	11200
8.2	832	3.8	112.52	S123	90S6	30000	11200
8.2	795	2.8	343.93	S123	80A2	30000	11200
8.1	836	1.9	173.78	S103	80B4	22000	9000
8.1	802	1.5	345.60	S103	71C2	22000	9000
8.1	799	1.5	345.60	S103	80A2	22000	9000
7.9	866	1.2	117.17	S083	80C6	18000	7200
7.9	866	1.2	117.17	S083	90S6	18000	7200
7.9	854	3.5	177.53	S123	80B4	30000	11200
7.6	889	1.1	184.88	S083	80B4	18000	7200
7.6	897	1.9	121.29	S103	80C6	22000	9000
7.6	897	1.9	121.29	S103	90S6	22000	9000
7.5	912	3.5	123.33	S123	80C6	30000	11200
7.5	912	3.5	123.33	S123	90S6	30000	11200
7.4	907	1.8	188.51	S103	80B4	22000	9000
7.2	936	3.2	194.59	S123	80B4	30000	11200
7.1	951	1.1	128.73	S083	80C6	18000	7200
7.1	951	1.1	128.73	S083	90S6	18000	7200
7.1	951	1.8	128.73	S103	80C6	22000	9000
7.1	951	1.8	128.73	S103	90S6	22000	9000
7.1	916	1.3	394.69	S103	71C2	22000	9000
7.1	913	1.3	394.69	S103	80A2	22000	9000
7.1	961	3.3	130.04	S123	80C6	30000	11200
7.1	961	3.3	130.04	S123	90S6	30000	11200
6.9	977	1.0	203.11	S083	80B4	18000	7200
6.9	977	1.6	203.11	S103	80B4	22000	9000
6.9	989	3.2	133.78	S123	80C6	30000	11200
6.9	989	3.2	133.78	S123	90S6	30000	11200
6.8	987	1.0	205.34	S083	80B4	18000	7200
6.7	1008	1.0	136.34	S083	80C6	18000	7200
6.7	1008	1.0	136.34	S083	90S6	18000	7200
6.5	1044	1.6	141.24	S103	80C6	22000	9000
6.5	1044	1.6	141.24	S103	90S6	22000	9000
6.5	1037	2.9	215.60	S123	80B4	30000	11200
6.3	1072	1.5	222.85	S103	80B4	22000	9000
6.2	1087	0.9	226.04	S083	80B4	18000	7200
6.2	1081	1.5	224.76	S103	80B4	22000	9000
6.1	1119	2.8	151.43	S123	80C6	30000	11200
6.1	1119	2.8	151.43	S123	90S6	30000	11200
5.9	1149	0.9	158.76	S083	90S6	18000	7200
5.9	1149	2.6	238.93	S123	80B4	30000	11200
5.5	1229	2.4	255.54	S123	80B4	30000	11200
5.3	1284	1.3	173.78	S103	80C6	22000	9000
5.3	1284	1.3	173.78	S103	90S6	22000	9000

5.1 S MOTORREDUCTORES (50Hz)

0.75 kW

n2 [rpm]	M2 [Nm]	fs	i	Reductor	Motor	Fr2 D [N]	Fr2 C-L [N]
5.2	1312	2.4	177.53	S123	80C6	30000	11200
5.2	1312	2.4	177.53	S123	90S6	30000	11200
5.1	1319	1.2	274.20	S103	80B4	22000	9000
5.0	1351	1.2	280.89	S103	80B4	22000	9000
5.0	1347	2.2	280.10	S123	80B4	30000	11200
4.9	1393	1.2	188.51	S103	80C6	22000	9000
4.9	1393	1.2	188.51	S103	90S6	22000	9000
4.8	1406	1.1	292.36	S103	80B4	22000	9000
4.7	1438	2.2	194.59	S123	80C6	30000	11200
4.7	1438	2.2	194.59	S123	90S6	30000	11200
4.6	1448	2.1	301.16	S123	80B4	30000	11200
4.5	1501	1.1	203.11	S103	80C6	22000	9000
4.5	1501	1.1	203.11	S103	90S6	22000	9000
4.4	1543	1.0	320.79	S103	80B4	22000	9000
4.3	1594	2.0	215.60	S123	80C6	30000	11200
4.3	1594	2.0	215.60	S123	90S6	30000	11200
4.1	1647	1.0	222.85	S103	80C6	22000	9000
4.1	1647	1.0	222.85	S103	90S6	22000	9000
4.1	1661	1.0	224.76	S103	80C6	22000	9000
4.1	1661	1.0	224.76	S103	90S6	22000	9000
4.1	1662	1.0	345.60	S103	80B4	22000	9000
4.1	1654	1.8	343.93	S123	80B4	30000	11200
3.9	1766	1.8	238.93	S123	80C6	30000	11200
3.9	1766	1.8	238.93	S123	90S6	30000	11200
3.6	1889	1.7	255.54	S123	80C6	30000	11200
3.6	1889	1.7	255.54	S123	90S6	30000	11200
3.3	2070	1.5	280.10	S123	80C6	30000	11200
3.3	2070	1.5	280.10	S123	90S6	30000	11200
3.1	2226	1.4	301.16	S123	80C6	30000	11200
3.1	2226	1.4	301.16	S123	90S6	30000	11200
2.7	2542	1.2	343.93	S123	80C6	30000	11200
2.7	2542	1.2	343.93	S123	90S6	30000	11200

0.92 kW

n2 [rpm]	M2 [Nm]	fs	i	Reductor	Motor	Fr2 D [N]	Fr2 C-L [N]
162.3	52	3.3	8.63	S052	80C4	4061	4061
125.7	67	2.8	11.14	S052	80C4	4358	4358
116.7	72	2.8	12.00	S052	80C4	4445	4445
102.5	82	2.6	13.66	S052	80C4	4599	4599
91.7	92	2.6	15.27	S052	80C4	4734	4734
86.0	98	2.4	16.29	S052	80C4	4811	4811
75.1	112	2.1	18.63	S052	80C4	4973	4973
72.6	116	3.9	19.29	S062	80C4	9046	3618

5.1 S MOTORREDUCTORES (50Hz)

0.92 kW

n2 [rpm]	M2 [Nm]	fs	i	Reductor	Motor	Fr2 D [N]	Fr2 C-L [N]
71.6	118	3.9	19.55	S062	80C4	9080	3632
71.0	119	2.0	19.73	S052	80C4	5042	5042
66.6	127	2.1	21.04	S052	80C4	5119	5119
65.0	130	2.0	21.53	S052	80C4	5147	5147
60.4	140	3.4	23.18	S062	80C4	9509	3804
58.9	143	3.3	23.75	S062	80C4	9571	3829
58.2	145	1.8	24.07	S052	80C4	5279	5279
55.7	151	3.2	25.14	S062	80C4	9717	3887
55.6	152	1.9	25.20	S052	80C4	5333	5333
54.3	155	1.9	25.79	S052	80C4	5360	5360
50.6	167	2.9	27.66	S062	80C4	9962	3985
50.3	168	1.7	27.81	S052	80C4	5447	5447
46.7	181	1.6	30.00	S052	80C4	5533	5533
46.7	181	2.8	30.00	S062	80C4	10000	4000
43.0	196	1.5	32.55	S052	80C4	5624	5624
42.4	199	1.5	33.00	S052	80C4	5638	5638
41.7	198	3.0	33.57	S063	80C4	10000	4000
41.3	204	2.6	33.93	S062	80C4	10000	4000
41.1	205	1.5	34.09	S052	80C4	5674	5674
38.4	215	1.6	36.50	S053	80C4	5772	5772
38.3	220	1.5	36.55	S052	80C4	5747	5747
38.3	220	2.7	36.57	S062	80C4	10000	4000
37.1	223	2.7	37.77	S063	80C4	10000	4000
36.1	233	1.4	38.75	S052	80C4	5807	5807
35.6	237	2.5	39.38	S062	80C4	10000	4000
35.1	240	1.5	39.90	S052	80C4	5836	5836
35.0	236	2.5	40.05	S063	80C4	10000	4000
32.8	257	1.4	42.63	S052	80C4	5900	5900
32.5	259	3.9	43.05	S082	80C4	18000	6845
32.1	263	2.3	43.64	S062	80C4	10000	4000
30.4	277	1.3	46.00	S052	80C4	5970	5970
30.4	278	2.2	46.10	S062	80C4	10000	4000
29.7	284	1.2	47.20	S052	80C4	5993	5993
29.7	278	1.3	47.14	S053	80C4	6000	6000
29.0	291	2.1	48.30	S062	80C4	10000	4000
28.5	290	2.1	49.13	S063	80C4	10000	4000
27.9	303	3.3	50.25	S082	80C4	18000	7175
26.8	315	1.1	52.25	S052	80C4	6000	6000
26.2	322	1.9	53.53	S062	80C4	10000	4000
25.8	327	3.1	54.27	S082	80C4	18000	7200
25.5	331	1.8	55.00	S062	80C4	10000	4000
25.4	332	3.9	55.14	S102	80C4	22000	9000
25.3	326	1.8	55.29	S063	80C4	10000	4000
24.2	349	1.0	57.86	S052	80C4	6000	6000
24.2	341	1.0	57.79	S053	80C4	6000	6000

5.1 S MOTORREDUCTORES (50Hz)

0.92 kW

n2 [rpm]	M2 [Nm]	fs	i	Reductor	Motor	Fr2 D [N]	Fr2 C-L [N]
23.8	346	1.7	58.72	S063	80C4	10000	4000
23.6	358	1.0	59.42	S052	80C4	6000	6000
22.6	373	2.7	61.98	S082	80C4	18000	7200
22.0	376	0.9	63.74	S053	80C4	6000	6000
21.3	388	1.5	65.85	S063	80C4	10000	4000
20.8	406	1.5	67.47	S062	80C4	10000	4000
20.7	398	2.5	67.52	S083	80C4	18000	7200
20.6	409	3.9	67.84	S102	80C4	22000	9000
20.5	403	1.5	68.25	S063	80C4	10000	4000
19.0	434	1.4	73.63	S063	80C4	10000	4000
18.9	438	2.3	74.18	S083	80C4	18000	7200
18.9	438	3.7	74.18	S103	80C4	22000	9000
17.2	480	1.2	81.43	S063	80C4	10000	4000
17.2	480	3.3	81.39	S103	80C4	22000	9000
17.1	482	2.1	81.71	S083	80C4	18000	7200
15.6	530	3.0	89.77	S103	80C4	22000	9000
15.3	540	1.9	91.49	S083	80C4	18000	7200
14.0	589	1.0	99.89	S063	80C4	10000	4000
14.0	591	2.7	100.15	S103	80C4	22000	9000
13.9	594	1.7	100.62	S083	80C4	18000	7200
12.7	652	2.5	110.55	S103	80C4	22000	9000
11.9	691	1.4	117.17	S083	80C4	18000	7200
11.5	716	2.2	121.29	S103	80C4	22000	9000
10.9	759	1.3	128.73	S083	80C4	18000	7200
10.9	759	2.1	128.73	S103	80C4	22000	9000
10.8	767	3.9	130.04	S123	80C4	30000	11200
10.5	789	3.8	133.78	S123	80C4	30000	11200
10.3	804	1.2	136.34	S083	80C4	18000	7200
9.9	833	1.9	141.24	S103	80C4	22000	9000
9.2	893	3.4	151.43	S123	80C4	30000	11200
8.8	937	1.1	158.76	S083	80C4	18000	7200
8.1	1025	1.6	173.78	S103	80C4	22000	9000
7.9	1047	2.9	177.53	S123	80C4	30000	11200
7.6	1091	0.9	184.88	S083	80C4	18000	7200
7.4	1112	1.4	188.51	S103	80C4	22000	9000
7.2	1148	2.6	194.59	S123	80C4	30000	11200
6.9	1198	1.3	203.11	S103	80C4	22000	9000
6.5	1272	2.4	215.60	S123	80C4	30000	11200
6.3	1315	1.2	222.85	S103	80C4	22000	9000
6.2	1326	1.2	224.76	S103	80C4	22000	9000
5.9	1410	2.1	238.93	S123	80C4	30000	11200
5.5	1508	2.0	255.54	S123	80C4	30000	11200
5.1	1618	1.0	274.20	S103	80C4	22000	9000
5.0	1657	1.0	280.89	S103	80C4	22000	9000
5.0	1652	1.8	280.10	S123	80C4	30000	11200

5.1 S MOTORREDUCTORES (50Hz)

0.92 kW

n2 [rpm]	M2 [Nm]	fs	i	Reductor	Motor	Fr2 D [N]	Fr2 C-L [N]
4.8	1725	0.9	292.36	S103	80C4	22000	9000
4.6	1777	1.7	301.16	S123	80C4	30000	11200
4.1	2029	1.5	343.93	S123	80C4	30000	11200

1.10 kW

n2 [rpm]	M2 [Nm]	fs	i	Reductor	Motor	Fr2 D [N]	Fr2 C-L [N]
254.9	38	3.7	11.14	S052	80B2	3537	3537
236.7	41	3.6	12.00	S052	80B2	3614	3614
208.0	47	3.4	13.66	S052	80B2	3749	3749
185.3	53	3.4	15.27	S052	80B2	3871	3871
174.4	56	3.2	16.29	S052	80B2	3937	3937
163.5	62	2.8	8.63	S052	80D4	3994	3994
162.3	62	2.7	8.63	S052	90S4	4002	4002
152.4	64	2.8	18.63	S052	80B2	4083	4083
144.0	68	2.7	19.73	S052	80B2	4146	4146
135.0	72	2.7	21.04	S052	80B2	4218	4218
131.9	74	2.6	21.53	S052	80B2	4243	4243
126.6	80	2.4	11.14	S052	80D4	4273	4273
125.7	80	2.4	11.14	S052	90S4	4281	4281
117.6	83	2.4	24.07	S052	80B2	4372	4372
117.5	86	2.3	12.00	S052	80D4	4355	4355
116.7	86	2.3	12.00	S052	90S4	4363	4363
116.3	88	4.0	8.00	S062	90L6	7819	3128
112.3	87	2.5	25.20	S052	80B2	4423	4423
110.1	92	1.9	8.63	S052	100LR6	4421	4421
109.8	89	2.5	25.79	S052	80B2	4449	4449
107.8	94	1.9	8.63	S052	90L6	4445	4445
106.5	96	3.6	8.92	S062	100LR6	8014	3206
104.2	98	3.5	8.92	S062	90L6	8062	3225
103.2	98	2.2	13.66	S052	80D4	4498	4498
102.7	95	3.8	27.66	S062	80B2	8124	3250
102.5	98	2.1	13.66	S052	90S4	4506	4506
101.8	96	2.3	27.81	S052	80B2	4534	4534
99.5	102	3.7	9.55	S062	100LR6	8166	3267
97.4	105	3.6	9.55	S062	90L6	8215	3286
94.7	103	2.1	30.00	S052	80B2	4615	4615
94.7	103	3.6	30.00	S062	80B2	8310	3324
92.3	109	2.2	15.27	S052	80D4	4621	4621
91.7	110	2.2	15.27	S052	90S4	4629	4629
89.2	114	3.3	10.65	S062	100LR6	8415	3366
88.5	114	3.9	15.94	S062	80D4	8442	3377
87.8	115	3.9	15.94	S062	90S4	8458	3383
87.4	117	3.2	10.65	S062	90L6	8464	3385

5.1 S MOTORREDUCTORES (50Hz)

1.10 kW

n2 [rpm]	M2 [Nm]	fs	i	Reductor	Motor	Fr2 D [N]	Fr2 C-L [N]
87.3	112	2.0	32.55	S052	80B2	4707	4707
87.2	116	3.9	16.16	S062	80D4	8474	3390
86.6	116	2.1	16.29	S052	80D4	4692	4692
86.6	116	3.9	16.16	S062	90S4	8491	3396
86.1	113	2.0	33.00	S052	80B2	4722	4722
86.0	117	2.0	16.29	S052	90S4	4700	4700
85.3	119	1.7	11.14	S052	100LR6	4702	4702
84.6	113	4.0	33.57	S063	80B2	8587	3435
83.5	122	1.6	11.14	S052	90L6	4725	4725
83.4	117	3.5	33.93	S062	80B2	8604	3442
83.3	117	1.9	34.09	S052	80B2	4759	4759
81.1	126	3.3	11.71	S062	100LR6	8634	3454
79.4	128	3.2	11.71	S062	90L6	8684	3473
79.2	129	1.6	12.00	S052	100LR6	4782	4782
77.5	131	1.6	12.00	S052	90L6	4805	4805
77.5	123	2.1	36.50	S053	80B2	4854	4854
77.4	126	2.0	36.55	S052	80B2	4840	4840
77.4	126	3.6	36.57	S062	80B2	8781	3513
75.7	133	1.8	18.63	S052	80D4	4838	4838
75.2	127	3.6	37.77	S063	80B2	8867	3547
75.1	134	1.8	18.63	S052	90S4	4846	4846
73.3	133	1.9	38.75	S052	80B2	4901	4901
73.1	138	3.3	19.29	S062	80D4	8885	3554
72.8	140	3.1	13.06	S062	100LR6	8888	3555
72.6	139	3.2	19.29	S062	90S4	8902	3561
72.1	140	3.3	19.55	S062	80D4	8917	3567
72.1	135	3.3	39.38	S062	80B2	8948	3579
71.6	141	3.3	19.55	S062	90S4	8934	3574
71.5	141	1.7	19.73	S052	80D4	4899	4899
71.2	137	1.9	39.90	S052	80B2	4933	4933
71.2	143	3.1	13.06	S062	90L6	8938	3575
71.1	143	3.1	13.36	S062	100LR6	8941	3576
71.0	142	1.7	19.73	S052	90S4	4907	4907
70.7	135	3.3	40.05	S063	80B2	9015	3606
69.6	146	1.5	13.66	S052	100LR6	4920	4920
69.6	146	3.0	13.36	S062	90L6	8991	3596
68.1	150	1.5	13.66	S052	90L6	4942	4942
67.0	150	1.7	21.04	S052	80D4	4968	4968
66.6	152	1.7	21.04	S052	90S4	4975	4975
66.4	147	1.8	42.63	S052	80B2	5009	5009
65.5	154	1.7	21.53	S052	80D4	4992	4992
65.1	150	3.0	43.64	S062	80B2	9194	3677
65.0	155	1.7	21.53	S052	90S4	4999	4999
62.2	164	1.5	15.27	S052	100LR6	5036	5036
61.7	158	1.7	46.00	S052	80B2	5087	5087

5.1 S MOTORREDUCTORES (50Hz)

1.10 kW

n2 [rpm]	M2 [Nm]	fs	i	Reductor	Motor	Fr2 D [N]	Fr2 C-L [N]
61.4	159	2.8	46.10	S062	80B2	9334	3734
60.9	167	1.5	15.27	S052	90L6	5058	5058
60.8	166	2.8	23.18	S062	80D4	9319	3728
60.4	167	2.8	23.18	S062	90S4	9336	3734
60.2	162	1.6	47.20	S052	80B2	5114	5114
60.0	159	1.7	47.14	S053	80B2	5136	5136
59.6	171	2.8	15.94	S062	100LR6	9357	3743
59.4	170	2.8	23.75	S062	80D4	9377	3751
58.9	171	2.7	23.75	S062	90S4	9394	3758
58.8	173	2.7	16.16	S062	100LR6	9390	3756
58.8	166	2.7	48.30	S062	80B2	9438	3775
58.6	172	1.5	24.07	S052	80D4	5107	5107
58.4	175	2.7	15.94	S062	90L6	9407	3763
58.3	175	1.4	16.29	S052	100LR6	5101	5101
58.2	173	1.5	24.07	S052	90S4	5114	5114
57.8	165	2.7	49.13	S063	80B2	9501	3801
57.5	177	2.7	16.16	S062	90L6	9440	3776
57.1	178	1.4	16.29	S052	90L6	5123	5123
56.1	180	2.7	25.14	S062	80D4	9512	3805
56.0	180	1.6	25.20	S052	80D4	5153	5153
55.7	181	2.7	25.14	S062	90S4	9529	3812
55.6	182	1.6	25.20	S052	90S4	5160	5160
54.7	184	1.6	25.79	S052	80D4	5176	5176
54.3	186	1.6	25.79	S052	90S4	5183	5183
54.2	180	1.5	52.25	S052	80B2	5224	5224
52.9	184	2.4	53.53	S062	80B2	9695	3878
51.5	189	2.4	55.00	S062	80B2	9760	3904
51.2	186	2.4	55.29	S063	80B2	9798	3919
51.0	200	1.3	18.63	S052	100LR6	5233	5233
51.0	198	2.4	27.66	S062	80D4	9739	3895
50.7	199	1.5	27.81	S052	80D4	5250	5250
50.6	199	2.4	27.66	S062	90S4	9756	3902
50.3	200	1.4	27.81	S052	90S4	5257	5257
49.9	204	1.2	18.63	S052	90L6	5253	5253
49.9	204	4.0	19.03	S082	100LR6	18000	5962
49.3	207	2.3	19.29	S062	100LR6	9807	3923
49.0	195	1.3	57.79	S053	80B2	5349	5349
48.9	199	1.3	57.86	S052	80B2	5326	5326
48.9	208	3.9	19.03	S082	90L6	18000	6001
48.6	210	2.3	19.55	S062	100LR6	9839	3936
48.2	212	1.2	19.73	S052	100LR6	5286	5286
48.2	211	2.2	19.29	S062	90L6	9857	3943
48.2	198	2.3	58.72	S063	80B2	9945	3978
47.8	204	1.3	59.42	S052	80B2	5348	5348
47.6	214	2.3	19.55	S062	90L6	9890	3956

5.1 S MOTORREDUCTORES (50Hz)

1.10 kW

n2 [rpm]	M2 [Nm]	fs	i	Reductor	Motor	Fr2 D [N]	Fr2 C-L [N]
47.2	216	3.7	20.14	S082	100LR6	18000	6067
47.1	216	1.2	19.73	S052	90L6	5306	5306
47.0	215	1.4	30.00	S052	80D4	5321	5321
47.0	215	2.3	30.00	S062	80D4	9932	3973
46.7	216	1.3	30.00	S052	90S4	5328	5328
46.7	216	2.3	30.00	S062	90S4	9948	3979
46.2	221	3.7	20.14	S082	90L6	18000	6107
45.7	213	3.5	61.98	S082	80B2	18000	6137
45.2	226	1.2	21.04	S052	100LR6	5345	5345
44.4	215	1.2	63.74	S053	80B2	5445	5445
44.2	230	1.2	21.04	S052	90L6	5363	5363
44.1	231	1.2	21.53	S052	100LR6	5365	5365
43.3	233	1.3	32.55	S052	80D4	5394	5394
43.2	236	1.2	21.53	S052	90L6	5383	5383
43.0	234	1.3	32.55	S052	90S4	5401	5401
43.0	222	2.0	65.85	S063	80B2	10000	4000
42.9	237	3.5	22.13	S082	100LR6	18000	6244
42.7	236	1.3	33.00	S052	80D4	5406	5406
42.4	238	1.3	33.00	S052	90S4	5413	5413
42.1	227	3.3	67.52	S083	80B2	18000	6299
42.0	235	2.6	33.57	S063	80D4	10000	4000
42.0	242	3.5	22.13	S082	90L6	18000	6285
41.9	232	1.9	67.47	S062	80B2	10000	4000
41.7	237	2.5	33.57	S063	90S4	10000	4000
41.6	243	2.2	33.93	S062	80D4	10000	4000
41.5	230	2.0	68.25	S063	80B2	10000	4000
41.4	244	1.2	34.09	S052	80D4	5434	5434
41.3	244	2.2	33.93	S062	90S4	10000	4000
41.1	246	1.2	34.09	S052	90S4	5440	5440
41.0	249	2.0	23.18	S062	100LR6	10000	4000
40.1	254	1.9	23.18	S062	90L6	10000	4000
40.1	251	4.0	34.91	S082	90S4	18000	6378
40.0	255	1.9	23.75	S062	100LR6	10000	4000
39.7	254	3.9	35.50	S082	80D4	18000	6397
39.6	257	3.3	24.00	S082	100LR6	18000	6402
39.5	258	1.1	24.07	S052	100LR6	5458	5458
39.4	256	3.9	35.50	S082	90S4	18000	6411
39.2	260	1.9	23.75	S062	90L6	10000	4000
39.0	250	1.1	72.83	S052	80B2	5535	5535
38.8	263	3.2	24.00	S082	90L6	18000	6443
38.6	261	1.3	36.55	S052	80D4	5491	5491
38.6	264	1.0	24.07	S052	90L6	5475	5475
38.6	256	1.4	36.50	S053	80D4	5522	5522
38.6	262	2.3	36.57	S062	80D4	10000	4000
38.4	257	1.4	36.50	S053	90S4	5528	5528

5.1 S MOTORREDUCTORES (50Hz)

1.10 kW

n2 [rpm]	M2 [Nm]	fs	i	Reductor	Motor	Fr2 D [N]	Fr2 C-L [N]
38.4	248	1.8	73.63	S063	80B2	10000	4000
38.3	263	1.3	36.55	S052	90S4	5497	5497
38.3	263	2.3	36.57	S062	90S4	10000	4000
38.1	250	1.1	74.20	S053	80B2	5585	5585
38.1	250	3.0	74.18	S083	80B2	18000	6490
37.8	270	1.9	25.14	S062	100LR6	10000	4000
37.7	270	1.1	25.20	S052	100LR6	5494	5494
37.3	265	2.3	37.77	S063	80D4	10000	4000
37.1	266	2.3	37.77	S063	90S4	10000	4000
37.0	275	1.8	25.14	S062	90L6	10000	4000
36.9	276	1.1	25.20	S052	90L6	5510	5510
36.8	276	1.1	25.79	S052	100LR6	5511	5511
36.5	279	3.0	26.05	S082	100LR6	18000	6563
36.4	277	1.2	38.75	S052	80D4	5536	5536
36.3	262	1.0	78.14	S053	80B2	5626	5626
36.1	279	1.2	38.75	S052	90S4	5542	5542
36.1	282	1.1	25.79	S052	90L6	5527	5527
35.8	282	2.1	39.38	S062	80D4	10000	4000
35.7	285	2.9	26.05	S082	90L6	18000	6605
35.6	284	2.1	39.38	S062	90S4	10000	4000
35.3	285	1.2	39.90	S052	80D4	5558	5558
35.2	281	2.1	40.05	S063	80D4	10000	4000
35.2	286	3.5	40.05	S082	80D4	18000	6636
35.1	287	1.2	39.90	S052	90S4	5563	5563
35.0	283	2.1	40.05	S063	90S4	10000	4000
35.0	289	3.5	40.05	S082	90S4	18000	6650
34.8	274	1.6	81.43	S063	80B2	10000	4000
34.8	293	3.2	27.29	S082	100LR6	18000	6656
34.6	275	2.7	81.71	S083	80B2	18000	6684
34.4	297	1.7	27.66	S062	100LR6	10000	4000
34.2	298	1.0	27.81	S052	100LR6	5565	5565
34.1	299	3.2	27.29	S082	90L6	18000	6699
33.6	303	1.7	27.66	S062	90L6	10000	4000
33.4	305	1.0	27.81	S052	90L6	5579	5579
33.1	305	1.1	42.63	S052	80D4	5604	5604
33.1	307	3.1	28.67	S082	100LR6	18000	6756
32.8	307	1.1	42.63	S052	90S4	5608	5608
32.7	308	3.2	43.05	S082	80D4	18000	6783
32.5	310	3.2	43.05	S082	90S4	18000	6797
32.4	314	3.0	28.67	S082	90L6	18000	6800
32.3	312	1.9	43.64	S062	80D4	10000	4000
32.1	314	1.9	43.64	S062	90S4	10000	4000
32.1	317	3.0	29.60	S082	100LR6	18000	6821
31.7	322	1.6	30.00	S062	100LR6	10000	4000
31.5	302	4.0	89.77	S103	80B2	22000	8490

5.1 S MOTORREDUCTORES (50Hz)

1.10 kW

n2 [rpm]	M2 [Nm]	fs	i	Reductor	Motor	Fr2 D [N]	Fr2 C-L [N]
31.4	324	2.9	29.60	S082	90L6	18000	6865
31.0	329	0.9	30.00	S052	90L6	5626	5626
31.0	329	1.6	30.00	S062	90L6	10000	4000
30.9	308	2.4	91.49	S083	80B2	18000	6917
30.7	329	1.1	46.00	S052	80D4	5651	5651
30.6	330	1.8	46.10	S062	80D4	10000	4000
30.4	331	1.1	46.00	S052	90S4	5655	5655
30.4	332	1.8	46.10	S062	90S4	10000	4000
29.9	338	1.0	47.20	S052	80D4	5666	5666
29.9	330	1.1	47.14	S053	80D4	5706	5706
29.9	341	3.1	31.78	S082	100LR6	18000	6968
29.7	340	1.0	47.20	S052	90S4	5670	5670
29.7	333	1.1	47.14	S053	90S4	5710	5710
29.3	348	3.0	31.78	S082	90L6	18000	7012
29.2	349	0.9	32.55	S052	100LR6	5659	5659
29.2	345	1.7	48.30	S062	80D4	10000	4000
29.0	348	1.7	48.30	S062	90S4	10000	4000
28.7	344	1.7	49.13	S063	80D4	10000	4000
28.5	347	1.7	49.13	S063	90S4	10000	4000
28.3	336	1.3	99.89	S063	80B2	10000	4000
28.3	337	3.6	100.15	S103	80B2	22000	8785
28.1	359	2.8	50.25	S082	80D4	18000	7104
28.1	339	2.2	100.62	S083	80B2	18000	7118
28.1	359	3.9	50.25	S102	80D4	22000	8790
28.0	364	1.6	33.93	S062	100LR6	10000	4000
27.9	362	2.8	50.25	S082	90S4	18000	7120
27.9	362	3.9	50.25	S102	90S4	22000	8809
27.7	360	1.8	33.57	S063	90L6	10000	4000
27.4	372	1.5	33.93	S062	90L6	10000	4000
27.2	374	2.8	34.91	S082	100LR6	18000	7166
27.2	374	3.9	34.91	S102	100LR6	22000	8870
27.0	374	0.9	52.25	S052	80D4	5716	5716
26.8	376	0.9	52.25	S052	90S4	5719	5719
26.8	381	2.8	35.50	S082	100LR6	18000	7200
26.6	382	2.7	34.91	S082	90L6	18000	7200
26.6	382	3.8	34.91	S102	90L6	22000	8929
26.3	383	1.6	53.53	S062	80D4	10000	4000
26.2	386	1.6	53.53	S062	90S4	10000	4000
26.2	389	2.7	35.50	S082	90L6	18000	7200
26.0	392	1.6	36.57	S062	100LR6	10000	4000
26.0	388	2.6	54.27	S082	80D4	18000	7200
25.8	391	2.6	54.27	S082	90S4	18000	7200
25.6	393	1.5	55.00	S062	80D4	10000	4000
25.6	394	3.3	55.14	S102	80D4	22000	9000
25.6	372	3.2	110.55	S103	80B2	22000	9000

5.1 S MOTORREDUCTORES (50Hz)

1.10 kW

n2 [rpm]	M2 [Nm]	fs	i	Reductor	Motor	Fr2 D [N]	Fr2 C-L [N]
25.5	391	0.9	36.50	S053	90L6	5764	5764
25.5	396	1.5	55.00	S062	90S4	10000	4000
25.5	387	1.5	55.29	S063	80D4	10000	4000
25.4	401	1.6	36.57	S062	90L6	10000	4000
25.4	397	3.3	55.14	S102	90S4	22000	9000
25.3	390	1.5	55.29	S063	90S4	10000	4000
24.8	411	3.8	38.30	S102	100LR6	22000	9000
24.6	405	1.6	37.77	S063	90L6	10000	4000
24.3	420	3.8	38.30	S102	90L6	22000	9000
24.2	395	1.9	117.17	S083	80B2	18000	7200
24.1	422	1.5	39.38	S062	100LR6	10000	4000
24.0	411	1.5	58.72	S063	80D4	10000	4000
23.8	414	1.4	58.72	S063	90S4	10000	4000
23.7	429	2.4	40.05	S082	100LR6	18000	7200
23.7	425	3.8	59.40	S102	80D4	22000	9000
23.6	431	1.5	39.38	S062	90L6	10000	4000
23.6	428	3.7	59.40	S102	90S4	22000	9000
23.3	408	2.9	121.29	S103	80B2	22000	9000
23.2	430	1.5	40.05	S063	90L6	10000	4000
23.2	439	2.4	40.05	S082	90L6	18000	7200
22.8	443	2.3	61.98	S082	80D4	18000	7200
22.6	446	2.2	61.98	S082	90S4	18000	7200
22.4	426	1.1	126.43	S063	80B2	10000	4000
22.3	456	3.2	42.53	S102	100LR6	22000	9000
22.1	462	2.3	43.05	S082	100LR6	18000	7200
22.0	433	1.7	128.73	S083	80B2	18000	7200
22.0	433	2.8	128.73	S103	80B2	22000	9000
21.9	466	3.2	42.53	S102	90L6	22000	9000
21.8	468	1.3	43.64	S062	100LR6	10000	4000
21.6	472	2.2	43.05	S082	90L6	18000	7200
21.6	472	2.9	44.00	S102	100LR6	22000	9000
21.4	461	1.3	65.85	S063	80D4	10000	4000
21.3	478	1.3	43.64	S062	90L6	10000	4000
21.3	464	1.3	65.85	S063	90S4	10000	4000
21.1	482	2.8	44.00	S102	90L6	22000	9000
20.9	483	1.2	67.47	S062	80D4	10000	4000
20.9	473	2.1	67.52	S083	80D4	18000	7200
20.8	486	1.2	67.47	S062	90S4	10000	4000
20.8	459	1.6	136.34	S083	80B2	18000	7200
20.8	485	3.3	67.84	S102	80D4	22000	9000
20.7	478	1.3	68.25	S063	80D4	10000	4000
20.7	476	2.1	67.52	S083	90S4	18000	7200
20.6	489	3.3	67.84	S102	90S4	22000	9000
20.5	481	1.2	68.25	S063	90S4	10000	4000
20.2	505	1.2	46.10	S062	90L6	10000	4000

5.1 S MOTORREDUCTORES (50Hz)

1.10 kW

n2 [rpm]	M2 [Nm]	fs	i	Reductor	Motor	Fr2 D [N]	Fr2 C-L [N]
20.2	505	3.3	47.13	S102	100LR6	22000	9000
20.0	476	2.5	141.24	S103	80B2	22000	9000
19.7	518	1.2	48.30	S062	100LR6	10000	4000
19.7	516	3.3	47.13	S102	90L6	22000	9000
19.3	529	1.2	48.30	S062	90L6	10000	4000
19.2	516	1.2	73.63	S063	80D4	10000	4000
19.0	519	1.2	73.63	S063	90S4	10000	4000
19.0	520	1.9	74.18	S083	80D4	18000	7200
19.0	520	3.1	74.18	S103	80D4	22000	9000
18.9	527	1.2	49.13	S063	90L6	10000	4000
18.9	539	1.9	50.25	S082	100LR6	18000	7200
18.9	523	1.9	74.18	S083	90S4	18000	7200
18.9	539	2.7	50.25	S102	100LR6	22000	9000
18.9	523	3.1	74.18	S103	90S4	22000	9000
18.5	550	1.9	50.25	S082	90L6	18000	7200
18.5	550	2.7	50.25	S102	90L6	22000	9000
17.8	535	1.4	158.76	S083	80B2	18000	7200
17.7	574	1.1	53.53	S062	100LR6	10000	4000
17.5	582	1.8	54.27	S082	100LR6	18000	7200
17.4	586	1.1	53.53	S062	90L6	10000	4000
17.3	570	1.1	81.43	S063	80D4	10000	4000
17.3	572	1.7	81.71	S083	80D4	18000	7200
17.3	570	2.8	81.39	S103	80D4	22000	9000
17.2	574	1.0	81.43	S063	90S4	10000	4000
17.2	591	2.3	55.14	S102	100LR6	22000	9000
17.2	574	2.8	81.39	S103	90S4	22000	9000
17.1	594	1.8	54.27	S082	90L6	18000	7200
17.1	576	1.7	81.71	S083	90S4	18000	7200
16.9	602	1.0	55.00	S062	90L6	10000	4000
16.9	604	2.3	55.14	S102	90L6	22000	9000
16.8	593	1.1	55.29	S063	90L6	10000	4000
16.3	585	2.1	173.78	S103	80B2	22000	9000
16.0	637	2.6	59.40	S102	100LR6	22000	9000
15.9	598	3.8	177.53	S123	80B2	30000	11200
15.8	630	1.0	58.72	S063	90L6	10000	4000
15.7	651	2.6	59.40	S102	90L6	22000	9000
15.7	629	2.5	89.77	S103	80D4	22000	9000
15.6	633	2.5	89.77	S103	90S4	22000	9000
15.4	641	1.6	91.49	S083	80D4	18000	7200
15.3	664	1.6	61.98	S082	100LR6	18000	7200
15.3	645	1.5	91.49	S083	90S4	18000	7200
15.3	623	1.2	184.88	S083	80B2	18000	7200
15.0	679	1.5	61.98	S082	90L6	18000	7200
15.0	635	1.9	188.51	S103	80B2	22000	9000
14.5	655	3.4	194.59	S123	80B2	30000	11200

5.1 S MOTORREDUCTORES (50Hz)

1.10 kW

n2 [rpm]	M2 [Nm]	fs	i	Reductor	Motor	Fr2 D [N]	Fr2 C-L [N]
14.3	699	0.9	65.85	S063	90L6	10000	4000
14.1	709	1.5	67.52	S083	100LR6	18000	7200
14.1	701	2.3	100.15	S103	80D4	22000	9000
14.0	705	1.4	100.62	S083	80D4	18000	7200
14.0	727	2.3	67.84	S102	100LR6	22000	9000
14.0	706	2.3	100.15	S103	90S4	22000	9000
13.9	710	1.4	100.62	S083	90S4	18000	7200
13.9	684	1.1	203.11	S083	80B2	18000	7200
13.9	684	1.8	203.11	S103	80B2	22000	9000
13.8	724	1.4	67.52	S083	90L6	18000	7200
13.8	691	1.1	205.34	S083	80B2	18000	7200
13.7	743	2.3	67.84	S102	90L6	22000	9000
13.4	746	3.8	71.07	S123	100LR6	30000	11200
13.1	726	3.1	215.60	S123	80B2	30000	11200
12.8	779	1.3	74.18	S083	100LR6	18000	7200
12.8	779	2.2	74.18	S103	100LR6	22000	9000
12.8	774	2.1	110.55	S103	80D4	22000	9000
12.7	780	2.1	110.55	S103	90S4	22000	9000
12.7	750	1.6	222.85	S103	80B2	22000	9000
12.6	757	1.6	224.76	S103	80B2	22000	9000
12.5	796	1.3	74.18	S083	90L6	18000	7200
12.5	796	2.1	74.18	S103	90L6	22000	9000
12.5	788	3.8	112.52	S123	80D4	30000	11200
12.4	794	3.8	112.52	S123	90S4	30000	11200
12.1	824	3.8	78.46	S123	100LR6	30000	11200
12.0	821	1.2	117.17	S083	80D4	18000	7200
11.9	826	1.2	117.17	S083	90S4	18000	7200
11.8	805	2.8	238.93	S123	80B2	30000	11200
11.7	855	2.0	81.39	S103	100LR6	22000	9000
11.6	858	1.2	81.71	S083	100LR6	18000	7200
11.6	849	1.9	121.29	S103	80D4	22000	9000
11.5	856	1.9	121.29	S103	90S4	22000	9000
11.4	876	1.2	81.71	S083	90L6	18000	7200
11.4	873	1.9	81.39	S103	90L6	22000	9000
11.4	864	3.5	123.33	S123	80D4	30000	11200
11.4	870	3.4	123.33	S123	90S4	30000	11200
11.1	860	2.6	255.54	S123	80B2	30000	11200
11.0	902	1.1	128.73	S083	80D4	18000	7200
11.0	902	1.8	128.73	S103	80D4	22000	9000
10.9	908	1.1	128.73	S083	90S4	18000	7200
10.9	908	1.8	128.73	S103	90S4	22000	9000
10.9	916	3.4	87.27	S123	100LR6	30000	11200
10.8	911	3.3	130.04	S123	80D4	30000	11200
10.8	917	3.3	130.04	S123	90S4	30000	11200
10.6	942	1.8	89.77	S103	100LR6	22000	9000

5.1 S MOTORREDUCTORES (50Hz)

1.10 kW

n2 [rpm]	M2 [Nm]	fs	i	Reductor	Motor	Fr2 D [N]	Fr2 C-L [N]
10.5	937	3.2	133.78	S123	80D4	30000	11200
10.5	944	3.2	133.78	S123	90S4	30000	11200
10.4	961	1.1	91.49	S083	100LR6	18000	7200
10.4	963	1.7	89.77	S103	90L6	22000	9000
10.3	955	1.0	136.34	S083	80D4	18000	7200
10.3	962	1.0	136.34	S083	90S4	18000	7200
10.3	923	1.3	274.20	S103	80B2	22000	9000
10.2	981	1.1	91.49	S083	90L6	18000	7200
10.1	946	1.3	280.89	S103	80B2	22000	9000
10.1	943	2.4	280.10	S123	80B2	30000	11200
10.0	989	1.6	141.24	S103	80D4	22000	9000
9.9	996	1.6	141.24	S103	90S4	22000	9000
9.7	984	1.2	292.36	S103	80B2	22000	9000
9.5	1051	1.6	100.15	S103	100LR6	22000	9000
9.4	1056	1.0	100.62	S083	100LR6	18000	7200
9.4	1014	2.2	301.16	S123	80B2	30000	11200
9.3	1074	1.6	100.15	S103	90L6	22000	9000
9.3	1061	2.8	151.43	S123	80D4	30000	11200
9.2	1079	1.0	100.62	S083	90L6	18000	7200
9.2	1068	2.8	151.43	S123	90S4	30000	11200
9.0	1096	0.9	158.76	S083	90S4	18000	7200
9.0	1112	2.8	105.91	S123	100LR6	30000	11200
8.8	1080	1.1	320.79	S103	80B2	22000	9000
8.6	1161	1.4	110.55	S103	100LR6	22000	9000
8.4	1186	1.4	110.55	S103	90L6	22000	9000
8.4	1181	2.7	112.52	S123	100LR6	30000	11200
8.3	1207	2.6	112.52	S123	90L6	30000	11200
8.2	1164	1.0	345.60	S103	80B2	22000	9000
8.2	1158	1.9	343.93	S123	80B2	30000	11200
8.1	1217	1.3	173.78	S103	80D4	22000	9000
8.1	1226	1.3	173.78	S103	90S4	22000	9000
7.9	1243	2.4	177.53	S123	80D4	30000	11200
7.9	1252	2.4	177.53	S123	90S4	30000	11200
7.8	1273	1.3	121.29	S103	100LR6	22000	9000
7.7	1301	1.3	121.29	S103	90L6	22000	9000
7.7	1295	2.4	123.33	S123	100LR6	30000	11200
7.7	1296	3.9	123.44	S143	100LR6	35000	18500
7.5	1320	1.2	188.51	S103	80D4	22000	9000
7.5	1323	2.4	123.33	S123	90L6	30000	11200
7.4	1351	1.2	128.73	S103	100LR6	22000	9000
7.4	1330	1.2	188.51	S103	90S4	22000	9000
7.3	1365	2.3	130.04	S123	100LR6	30000	11200
7.2	1380	1.2	128.73	S103	90L6	22000	9000
7.2	1395	2.3	130.04	S123	90L6	30000	11200
7.2	1363	2.2	194.59	S123	80D4	30000	11200

5.1 S MOTORREDUCTORES (50Hz)

1.10 kW

n2 [rpm]	M2 [Nm]	fs	i	Reductor	Motor	Fr2 D [N]	Fr2 C-L [N]
7.2	1372	2.2	194.59	S123	90S4	30000	11200
7.1	1404	2.2	133.78	S123	100LR6	30000	11200
7.0	1435	2.2	133.78	S123	90L6	30000	11200
6.9	1422	1.1	203.11	S103	80D4	22000	9000
6.9	1433	1.1	203.11	S103	90S4	22000	9000
6.8	1466	3.5	139.64	S143	100LR6	35000	18500
6.7	1483	1.1	141.24	S103	100LR6	22000	9000
6.6	1515	1.1	141.24	S103	90L6	22000	9000
6.5	1510	2.0	215.60	S123	80D4	30000	11200
6.5	1521	2.0	215.60	S123	90S4	30000	11200
6.4	1565	3.2	149.10	S143	100LR6	35000	18500
6.3	1561	1.0	222.85	S103	80D4	22000	9000
6.3	1572	1.0	222.85	S103	90S4	22000	9000
6.3	1574	1.0	224.76	S103	80D4	22000	9000
6.3	1590	2.0	151.43	S123	100LR6	30000	11200
6.2	1585	1.0	224.76	S103	90S4	22000	9000
6.1	1624	1.9	151.43	S123	90L6	30000	11200
6.0	1653	2.4	157.49	S143	100LR6	35000	18500
5.9	1673	1.8	238.93	S123	80D4	30000	11200
5.9	1685	1.8	238.93	S123	90S4	30000	11200
5.5	1824	0.9	173.78	S103	100LR6	22000	9000
5.5	1790	1.7	255.54	S123	80D4	30000	11200
5.5	1802	1.7	255.54	S123	90S4	30000	11200
5.5	1801	2.7	171.55	S143	100LR6	35000	18500
5.4	1864	0.9	173.78	S103	90L6	22000	9000
5.4	1864	1.7	177.53	S123	100LR6	30000	11200
5.4	1841	2.4	175.41	S143	100LR6	35000	18500
5.2	1904	1.7	177.53	S123	90L6	30000	11200
5.0	1962	1.5	280.10	S123	80D4	30000	11200
5.0	1976	1.5	280.10	S123	90S4	30000	11200
4.9	2043	1.5	194.59	S123	100LR6	30000	11200
4.8	2087	1.5	194.59	S123	90L6	30000	11200
4.8	2065	2.4	196.74	S143	100LR6	35000	18500
4.7	2109	1.4	301.16	S123	80D4	30000	11200
4.6	2124	1.4	301.16	S123	90S4	30000	11200
4.4	2263	1.4	215.60	S123	100LR6	30000	11200
4.3	2312	1.4	215.60	S123	90L6	30000	11200
4.3	2337	2.1	222.57	S143	100LR6	35000	18500
4.1	2409	1.2	343.93	S123	80D4	30000	11200
4.1	2426	1.2	343.93	S123	90S4	30000	11200
4.0	2508	1.3	238.93	S123	100LR6	30000	11200
4.0	2495	2.1	237.63	S143	100LR6	35000	18500
3.9	2562	1.2	238.93	S123	90L6	30000	11200
3.7	2683	1.2	255.54	S123	100LR6	30000	11200
3.6	2740	1.1	255.54	S123	90L6	30000	11200

5.1 S MOTORREDUCTORES (50Hz)

1.10 kW

n2 [rpm]	M2 [Nm]	fs	i	Reductor	Motor	Fr2 D [N]	Fr2 C-L [N]
3.5	2870	1.8	273.41	S143	100LR6	35000	18500
3.4	2941	1.1	280.10	S123	100LR6	30000	11200
3.3	3004	1.0	280.10	S123	90L6	30000	11200
3.2	3162	1.0	301.16	S123	100LR6	30000	11200
3.1	3230	1.0	301.16	S123	90L6	30000	11200

1.50 kW

n2 [rpm]	M2 [Nm]	fs	i	Reductor	Motor	Fr2 D [N]	Fr2 C-L [N]
332.8	40	3.2	8.63	S052	90S2	3211	3211
325.8	41	3.1	8.63	S052	80C2	3230	3230
257.6	52	2.8	11.14	S052	90S2	3447	3447
252.2	53	2.7	11.14	S052	80C2	3467	3467
238.3	56	2.7	12.00	S052	90S2	3520	3520
234.2	57	2.6	12.00	S052	80C2	3537	3537
208.0	64	2.5	13.66	S052	90S2	3650	3650
205.8	64	2.4	13.66	S052	80C2	3660	3660
187.9	71	2.5	15.27	S052	90S2	3747	3747
184.0	72	2.5	15.27	S052	80C2	3767	3767
175.6	76	2.4	16.29	S052	90S2	3812	3812
172.5	77	2.3	16.29	S052	80C2	3829	3829
164.6	84	2.0	8.63	S052	90L4	3857	3857
162.3	85	2.0	8.63	S052	90LA4	3871	3871
159.2	86	3.8	8.92	S062	90L4	7002	2801
156.9	88	3.8	8.92	S062	90LA4	7030	2812
152.4	87	2.1	18.63	S052	90S2	3949	3949
150.8	88	2.0	18.63	S052	80C2	3959	3959
148.8	92	3.9	9.55	S062	90L4	7134	2854
147.3	90	3.7	19.29	S062	90S2	7175	2870
146.7	94	3.8	9.55	S062	90LA4	7162	2865
146.3	91	3.8	19.55	S062	90S2	7188	2875
145.7	91	3.7	19.29	S062	80C2	7196	2878
145.0	92	2.0	19.73	S052	90S2	3997	3997
143.7	92	3.7	19.55	S062	80C2	7223	2889
142.4	93	1.9	19.73	S052	80C2	4014	4014
136.0	98	2.0	21.04	S052	90S2	4059	4059
133.6	99	2.0	21.04	S052	80C2	4076	4076
133.4	103	3.5	10.65	S062	90L4	7350	2940
131.9	101	1.9	21.53	S052	90S2	4088	4088
131.5	105	3.4	10.65	S062	90LA4	7378	2951
130.5	102	1.9	21.53	S052	80C2	4098	4098
127.5	108	1.8	11.14	S052	90L4	4099	4099
125.7	109	1.7	11.14	S052	90LA4	4112	4112
123.4	108	3.3	23.18	S062	90S2	7530	3012

5.1 S MOTORREDUCTORES (50Hz)

1.50 kW

n2 [rpm]	M2 [Nm]	fs	i	Reductor	Motor	Fr2 D [N]	Fr2 C-L [N]
121.3	113	3.4	11.71	S062	90L4	7540	3016
121.2	109	3.2	23.18	S062	80C2	7566	3026
119.6	115	3.4	11.71	S062	90LA4	7568	3027
119.6	111	3.2	23.75	S062	90S2	7594	3037
118.8	112	1.7	24.07	S052	90S2	4187	4187
118.3	116	1.7	12.00	S052	90L4	4167	4167
118.3	112	3.1	23.75	S062	80C2	7615	3046
117.5	118	2.9	8.00	S062	100L6	7596	3038
116.8	114	1.7	24.07	S052	80C2	4204	4204
116.7	118	1.7	12.00	S052	90LA4	4181	4181
116.3	119	2.9	8.00	S062	100LA6	7617	3047
113.8	117	3.1	25.14	S062	90S2	7695	3078
112.7	118	1.8	25.20	S052	90S2	4237	4237
111.8	119	3.0	25.14	S062	80C2	7732	3093
111.5	119	1.8	25.20	S052	80C2	4247	4247
110.9	120	1.8	25.79	S052	90S2	4252	4252
109.0	127	1.4	8.63	S052	100L6	4236	4236
109.0	122	1.8	25.79	S052	80C2	4269	4269
108.7	126	3.3	13.06	S062	90L4	7760	3104
107.8	129	1.4	8.63	S052	100LA6	4245	4245
107.2	128	3.3	13.06	S062	90LA4	7788	3115
106.3	129	3.2	13.36	S062	90L4	7805	3122
105.4	132	2.6	8.92	S062	100L6	7815	3126
104.8	131	3.2	13.36	S062	90LA4	7834	3134
104.2	133	2.6	8.92	S062	100LA6	7837	3135
104.0	132	1.6	13.66	S052	90L4	4285	4285
102.7	129	2.8	27.66	S062	90S2	7905	3162
102.5	134	1.6	13.66	S052	90LA4	4298	4298
102.1	130	1.7	27.81	S052	90S2	4329	4329
101.6	131	2.8	27.66	S062	80C2	7927	3171
101.0	131	1.7	27.81	S052	80C2	4339	4339
98.5	141	2.7	9.55	S062	100L6	7952	3181
97.4	143	2.7	9.55	S062	100LA6	7974	3189
94.7	140	1.6	30.00	S052	90S2	4398	4398
94.7	140	2.7	30.00	S062	90S2	8073	3229
93.7	142	1.5	30.00	S052	80C2	4408	4408
93.7	142	2.6	30.00	S062	80C2	8095	3238
93.0	148	1.6	15.27	S052	90L4	4384	4384
91.7	150	1.6	15.27	S052	90LA4	4397	4397
89.1	154	2.9	15.94	S062	90L4	8165	3266
88.3	157	2.4	10.65	S062	100L6	8173	3269
87.9	157	2.9	16.16	S062	90L4	8193	3277
87.8	157	2.9	15.94	S062	90LA4	8194	3277
87.4	159	2.4	10.65	S062	100LA6	8195	3278
87.3	152	1.5	32.55	S052	90S2	4471	4471

5.1 S MOTORREDUCTORES (50Hz)

1.50 kW

n2 [rpm]	M2 [Nm]	fs	i	Reductor	Motor	Fr2 D [N]	Fr2 C-L [N]
87.2	158	1.5	16.29	S052	90L4	4440	4440
86.6	159	2.8	16.16	S062	90LA4	8222	3289
86.3	154	1.5	32.55	S052	80C2	4481	4481
86.1	154	1.5	33.00	S052	90S2	4483	4483
86.0	160	1.5	16.29	S052	90LA4	4452	4452
85.2	156	1.4	33.00	S052	80C2	4493	4493
84.6	154	2.9	33.57	S063	90S2	8327	3331
84.4	165	1.2	11.14	S052	100L6	4458	4458
83.7	159	2.6	33.93	S062	90S2	8328	3331
83.7	155	2.9	33.57	S063	80C2	8349	3340
83.5	166	1.2	11.14	S052	100LA6	4467	4467
83.3	159	1.4	34.09	S052	90S2	4512	4512
82.8	160	2.5	33.93	S062	80C2	8350	3340
82.4	161	1.4	34.09	S052	80C2	4521	4521
80.3	173	2.4	11.71	S062	100L6	8366	3347
79.4	175	2.3	11.71	S062	100LA6	8388	3355
78.3	177	1.2	12.00	S052	100L6	4519	4519
77.8	167	1.6	36.50	S053	90S2	4591	4591
77.7	171	1.4	36.55	S052	90S2	4571	4571
77.7	171	2.6	36.57	S062	90S2	8484	3394
77.5	179	1.2	12.00	S052	100LA6	4527	4527
77.0	169	1.6	36.50	S053	80C2	4600	4600
76.9	173	1.4	36.55	S052	80C2	4580	4580
76.8	173	2.6	36.57	S062	80C2	8506	3402
76.2	180	1.3	18.63	S052	90L4	4551	4551
75.2	173	2.6	37.77	S063	90S2	8574	3430
75.1	183	1.3	18.63	S052	90LA4	4562	4562
74.4	175	2.6	37.77	S063	80C2	8597	3439
73.6	187	2.4	19.29	S062	90L4	8553	3421
73.3	181	1.4	38.75	S052	90S2	4620	4620
72.6	189	2.4	19.29	S062	90LA4	8582	3433
72.6	189	2.4	19.55	S062	90L4	8581	3432
72.5	183	1.4	38.75	S052	80C2	4629	4629
72.1	184	2.4	39.38	S062	90S2	8637	3455
72.0	191	1.3	19.73	S052	90L4	4596	4596
72.0	193	2.3	13.06	S062	100L6	8587	3435
71.6	192	2.4	19.55	S062	90LA4	8609	3444
71.4	186	2.4	39.38	S062	80C2	8659	3464
71.2	186	1.4	39.90	S052	90S2	4644	4644
71.2	195	2.3	13.06	S062	100LA6	8608	3443
71.0	194	1.2	19.73	S052	90LA4	4607	4607
70.9	183	2.5	40.05	S063	90S2	8697	3479
70.5	195	3.9	20.14	S082	90L4	18000	5308
70.4	188	1.4	39.90	S052	80C2	4652	4652
70.4	197	2.2	13.36	S062	100L6	8632	3453

5.1 S MOTORREDUCTORES (50Hz)

1.50 kW

n2 [rpm]	M2 [Nm]	fs	i	Reductor	Motor	Fr2 D [N]	Fr2 C-L [N]
70.2	185	2.4	40.05	S063	80C2	8719	3488
70.2	189	4.0	40.05	S082	80C2	18000	5322
69.6	199	2.2	13.36	S062	100LA6	8654	3461
69.5	198	3.9	20.14	S082	90LA4	18000	5331
68.8	202	1.1	13.66	S052	100L6	4618	4618
68.1	204	1.1	13.66	S052	100LA6	4626	4626
67.5	204	1.3	21.04	S052	90L4	4645	4645
66.9	208	3.8	14.04	S082	100L6	18000	5391
66.6	199	1.3	42.63	S052	90S2	4696	4696
66.6	207	1.3	21.04	S052	90LA4	4655	4655
66.2	210	3.8	14.04	S082	100LA6	18000	5409
66.0	209	1.2	21.53	S052	90L4	4662	4662
66.0	201	3.7	43.05	S082	90S2	18000	5424
65.9	201	1.3	42.63	S052	80C2	4704	4704
65.3	203	3.7	43.05	S082	80C2	18000	5442
65.1	204	2.2	43.64	S062	90S2	8849	3540
65.0	211	1.2	21.53	S052	90LA4	4672	4672
64.4	206	2.2	43.64	S062	80C2	8871	3548
64.2	214	3.7	22.13	S082	90L4	18000	5463
63.3	217	3.7	22.13	S082	90LA4	18000	5486
61.7	215	1.2	46.00	S052	90S2	4754	4754
61.6	215	2.1	46.10	S062	90S2	8961	3585
61.5	226	1.1	15.27	S052	100L6	4697	4697
61.3	224	2.1	23.18	S062	90L4	8923	3569
61.1	217	1.2	46.00	S052	80C2	4761	4761
61.0	218	2.1	46.10	S062	80C2	8983	3593
60.9	228	1.1	15.27	S052	100LA6	4705	4705
60.9	228	3.5	15.43	S082	100L6	18000	5548
60.4	228	2.1	23.18	S062	90LA4	8951	3581
60.3	230	3.5	15.43	S082	100LA6	18000	5566
60.2	221	1.2	47.20	S052	90S2	4772	4772
60.2	216	1.2	47.14	S053	90S2	4798	4798
59.8	230	2.0	23.75	S062	90L4	8972	3589
59.8	232	3.5	15.73	S082	100L6	18000	5580
59.6	218	1.2	47.14	S053	80C2	4806	4806
59.5	223	1.2	47.20	S052	80C2	4780	4780
59.2	232	3.4	24.00	S082	90L4	18000	5600
59.1	235	3.4	15.73	S082	100LA6	18000	5598
59.0	233	1.1	24.07	S052	90L4	4739	4739
59.0	235	2.0	15.94	S062	100L6	8984	3594
58.9	233	2.0	23.75	S062	90LA4	9000	3600
58.8	226	2.0	48.30	S062	90S2	9057	3623
58.4	238	2.0	15.94	S062	100LA6	9005	3602
58.3	236	3.4	24.00	S082	90LA4	18000	5624
58.2	236	1.1	24.07	S052	90LA4	4748	4748

5.1 S MOTORREDUCTORES (50Hz)

1.50 kW

n2 [rpm]	M2 [Nm]	fs	i	Reductor	Motor	Fr2 D [N]	Fr2 C-L [N]
58.2	239	2.0	16.16	S062	100L6	9011	3605
58.2	228	2.0	48.30	S062	80C2	9078	3631
57.8	225	2.0	49.13	S063	90S2	9121	3649
57.7	241	1.0	16.29	S052	100L6	4739	4739
57.5	241	2.0	16.16	S062	100LA6	9032	3613
57.2	227	2.0	49.13	S063	80C2	9143	3657
57.1	243	1.0	16.29	S052	100LA6	4746	4746
56.5	243	2.0	25.14	S062	90L4	9084	3634
56.5	235	3.2	50.25	S082	90S2	18000	5686
56.3	244	1.2	25.20	S052	90L4	4768	4768
55.9	237	3.2	50.25	S082	80C2	18000	5704
55.7	247	1.9	25.14	S062	90LA4	9112	3645
55.6	248	1.2	25.20	S052	90LA4	4777	4777
55.1	250	1.2	25.79	S052	90L4	4782	4782
54.5	252	3.2	26.05	S082	90L4	18000	5740
54.4	244	1.1	52.25	S052	90S2	4842	4842
54.4	256	3.2	17.29	S082	100L6	18000	5743
54.3	253	1.1	25.79	S052	90LA4	4791	4791
53.8	247	1.1	52.25	S052	80C2	4849	4849
53.8	258	3.1	17.29	S082	100LA6	18000	5762
53.7	256	3.1	26.05	S082	90LA4	18000	5765
53.1	250	1.8	53.53	S062	90S2	9263	3705
52.5	253	1.8	53.53	S062	80C2	9285	3714
52.3	254	3.0	54.27	S082	90S2	18000	5820
52.0	264	3.4	27.29	S082	90L4	18000	5822
51.8	256	2.9	54.27	S082	80C2	18000	5839
51.6	257	1.8	55.00	S062	90S2	9317	3727
51.5	258	3.8	55.14	S102	90S2	22000	7220
51.4	253	1.8	55.29	S063	90S2	9362	3745
51.3	268	1.8	27.66	S062	90L4	9269	3708
51.3	268	3.4	27.29	S082	90LA4	18000	5846
51.1	269	1.1	27.81	S052	90L4	4826	4826
51.1	260	1.7	55.00	S062	80C2	9338	3735
51.0	260	3.7	55.14	S102	80C2	22000	7244
50.8	256	1.8	55.29	S063	80C2	9383	3753
50.6	272	1.8	27.66	S062	90LA4	9296	3719
50.5	275	0.9	18.63	S052	100L6	4817	4817
50.3	273	1.1	27.81	S052	90LA4	4834	4834
49.9	278	0.9	18.63	S052	100LA6	4822	4822
49.7	262	1.0	57.79	S053	90S2	4929	4929
49.5	278	3.2	28.67	S082	90L4	18000	5909
49.4	281	2.9	19.03	S082	100L6	18000	5911
48.9	284	2.8	19.03	S082	100LA6	18000	5930
48.8	282	3.2	28.67	S082	90LA4	18000	5934
48.7	285	1.7	19.29	S062	100L6	9351	3740

5.1 S MOTORREDUCTORES (50Hz)

1.50 kW

n2 [rpm]	M2 [Nm]	fs	i	Reductor	Motor	Fr2 D [N]	Fr2 C-L [N]
48.4	269	1.7	58.72	S063	90S2	9482	3793
48.2	288	1.6	19.29	S062	100LA6	9371	3748
48.1	289	1.7	19.55	S062	100L6	9376	3750
48.0	287	3.1	29.60	S082	90L4	18000	5966
47.9	272	1.7	58.72	S063	80C2	9503	3801
47.6	292	1.7	19.55	S062	100LA6	9396	3758
47.3	291	1.0	30.00	S052	90L4	4865	4865
47.3	291	1.7	30.00	S062	90L4	9424	3769
47.3	291	3.1	29.60	S082	90LA4	18000	5991
46.7	295	1.0	30.00	S052	90LA4	4871	4871
46.7	295	1.7	30.00	S062	90LA4	9450	3780
46.7	298	2.7	20.14	S082	100L6	18000	6012
46.2	301	2.7	20.14	S082	100LA6	18000	6031
45.8	290	2.6	61.98	S082	90S2	18000	6058
45.3	293	2.6	61.98	S082	80C2	18000	6077
44.7	308	3.2	31.78	S082	90L4	18000	6094
44.1	312	3.2	31.78	S082	90LA4	18000	6119
43.6	315	1.0	32.55	S052	90L4	4900	4900
43.1	301	1.5	65.85	S063	90S2	9707	3883
43.0	320	0.9	32.55	S052	90LA4	4905	4905
43.0	320	0.9	33.00	S052	90L4	4905	4905
42.7	305	1.5	65.85	S063	80C2	9727	3891
42.5	327	2.6	22.13	S082	100L6	18000	6183
42.4	324	0.9	33.00	S052	90LA4	4910	4910
42.3	318	1.9	33.57	S063	90L4	9673	3869
42.1	315	1.4	67.47	S062	90S2	9712	3885
42.1	309	2.4	67.52	S083	90S2	18000	6221
42.0	330	2.5	22.13	S082	100LA6	18000	6202
41.9	329	1.6	33.93	S062	90L4	9649	3860
41.9	317	3.8	67.84	S102	90S2	22000	7701
41.7	330	0.9	34.09	S052	90L4	4917	4917
41.7	319	1.4	67.47	S062	80C2	9731	3893
41.7	323	1.9	33.57	S063	90LA4	9699	3880
41.6	312	1.4	68.25	S063	90S2	9775	3910
41.6	312	2.4	67.52	S083	80C2	18000	6241
41.4	320	3.7	67.84	S102	80C2	22000	7726
41.3	333	1.6	33.93	S062	90LA4	9675	3870
41.2	316	1.4	68.25	S063	80C2	9795	3918
40.7	338	3.0	34.91	S082	90L4	18000	6266
40.6	342	1.4	23.18	S062	100L6	9684	3874
40.1	346	1.4	23.18	S062	100LA6	9702	3881
40.1	343	2.9	34.91	S082	90LA4	18000	6293
40.0	344	2.9	35.50	S082	90L4	18000	6297
39.6	351	1.4	23.75	S062	100L6	9726	3890
39.4	349	2.9	35.50	S082	90LA4	18000	6324

5.1 S MOTORREDUCTORES (50Hz)

1.50 kW

n2 [rpm]	M2 [Nm]	fs	i	Reductor	Motor	Fr2 D [N]	Fr2 C-L [N]
39.2	355	1.4	23.75	S062	100LA6	9744	3898
39.2	355	2.4	24.00	S082	100L6	18000	6333
38.9	354	0.9	36.55	S052	90L4	4937	4937
38.9	346	1.0	36.50	S053	90L4	4980	4980
38.8	354	1.7	36.57	S062	90L4	9781	3913
38.8	358	2.3	24.00	S082	100LA6	18000	6353
38.6	337	1.3	73.63	S063	90S2	9917	3967
38.4	351	1.0	36.50	S053	90LA4	4984	4984
38.3	359	0.9	36.55	S052	90LA4	4941	4941
38.3	359	1.7	36.57	S062	90LA4	9806	3922
38.3	339	2.2	74.18	S083	90S2	18000	6398
38.3	339	3.5	74.18	S103	90S2	22000	7922
38.2	340	1.3	73.63	S063	80C2	9937	3975
37.9	343	2.2	74.18	S083	80C2	18000	6418
37.9	343	3.5	74.18	S103	80C2	22000	7948
37.6	358	1.7	37.77	S063	90L4	9885	3954
37.4	372	1.4	25.14	S062	100L6	9822	3929
37.1	363	1.7	37.77	S063	90LA4	9909	3964
37.0	376	1.3	25.14	S062	100LA6	9840	3936
36.6	376	4.0	38.30	S102	90LA4	22000	8020
36.1	381	1.6	39.38	S062	90L4	9906	3962
36.1	385	2.2	26.05	S082	100L6	18000	6488
35.7	389	2.2	26.05	S082	100LA6	18000	6508
35.6	386	0.9	39.90	S052	90L4	4954	4954
35.6	387	1.6	39.38	S062	90LA4	9929	3972
35.5	380	1.6	40.05	S063	90L4	9985	3994
35.5	388	2.6	40.05	S082	90L4	18000	6525
35.0	385	1.6	40.05	S063	90LA4	10000	4000
35.0	393	2.5	40.05	S082	90LA4	18000	6552
34.9	373	1.2	81.43	S063	90S2	10000	4000
34.9	372	3.2	81.39	S103	90S2	22000	8152
34.8	374	2.0	81.71	S083	90S2	18000	6583
34.5	377	1.2	81.43	S063	80C2	10000	4000
34.5	376	3.2	81.39	S103	80C2	22000	8178
34.4	403	2.3	27.29	S082	100L6	18000	6576
34.4	378	2.0	81.71	S083	80C2	18000	6604
34.1	408	2.3	27.29	S082	100LA6	18000	6597
34.0	409	1.2	27.66	S062	100L6	9976	3990
33.6	413	1.2	27.66	S062	100LA6	9993	3997
33.4	412	3.4	42.53	S102	90L4	22000	8245
33.0	417	2.4	43.05	S082	90L4	18000	6664
32.9	418	3.4	42.53	S102	90LA4	22000	8281
32.8	424	2.2	28.67	S082	100L6	18000	6672
32.5	423	1.4	43.64	S062	90L4	10000	4000
32.5	423	2.4	43.05	S082	90LA4	18000	6691

5.1 S MOTORREDUCTORES (50Hz)

1.50 kW

n2 [rpm]	M2 [Nm]	fs	i	Reductor	Motor	Fr2 D [N]	Fr2 C-L [N]
32.4	428	2.2	28.67	S082	100LA6	18000	6692
32.3	426	3.1	44.00	S102	90L4	22000	8332
32.1	429	1.4	43.64	S062	90LA4	10000	4000
31.8	437	2.2	29.60	S082	100L6	18000	6733
31.8	432	3.0	44.00	S102	90LA4	22000	8368
31.6	411	2.9	89.77	S103	90S2	22000	8400
31.5	441	3.6	29.87	S102	100L6	22000	8392
31.4	442	2.1	29.60	S082	100LA6	18000	6754
31.3	443	1.2	30.00	S062	100L6	10000	4000
31.3	415	2.9	89.77	S103	80C2	22000	8427
31.1	446	3.5	29.87	S102	100LA6	22000	8420
31.0	448	1.2	30.00	S062	100LA6	10000	4000
31.0	419	1.8	91.49	S083	90S2	18000	6805
30.8	446	1.3	46.10	S062	90L4	10000	4000
30.7	423	1.8	91.49	S083	80C2	18000	6826
30.4	453	1.3	46.10	S062	90LA4	10000	4000
30.1	456	3.5	47.13	S102	90L4	22000	8507
29.7	463	3.5	47.13	S102	90LA4	22000	8544
29.6	470	2.2	31.78	S082	100L6	18000	6872
29.4	468	1.3	48.30	S062	90L4	10000	4000
29.3	475	2.2	31.78	S082	100LA6	18000	6894
29.0	474	1.3	48.30	S062	90LA4	10000	4000
29.0	479	3.3	32.40	S102	100L6	22000	8602
28.9	466	1.3	49.13	S063	90L4	10000	4000
28.7	484	3.3	32.40	S102	100LA6	22000	8630
28.5	473	1.3	49.13	S063	90LA4	10000	4000
28.4	458	2.6	100.15	S103	90S2	22000	8685
28.3	487	2.1	50.25	S082	90L4	18000	6968
28.3	487	2.9	50.25	S102	90L4	22000	8674
28.2	460	1.6	100.62	S083	90S2	18000	6995
28.1	463	2.6	100.15	S103	80C2	22000	8713
27.9	494	2.0	50.25	S082	90LA4	18000	6996
27.9	465	1.6	100.62	S083	80C2	18000	7017
27.9	494	2.8	50.25	S102	90LA4	22000	8711
27.7	501	1.1	33.93	S062	100L6	10000	4000
27.4	507	1.1	33.93	S062	100LA6	10000	4000
26.9	516	2.0	34.91	S082	100L6	18000	7060
26.9	516	2.8	34.91	S102	100L6	22000	8798
26.6	521	2.0	34.91	S082	100LA6	18000	7081
26.6	521	2.8	34.91	S102	100LA6	22000	8826
26.5	518	1.2	53.53	S062	90L4	10000	4000
26.5	525	2.0	35.50	S082	100L6	18000	7093
26.2	526	1.1	53.53	S062	90LA4	10000	4000
26.2	530	2.0	35.50	S082	100LA6	18000	7115
26.2	526	1.9	54.27	S082	90L4	18000	7122

5.1 S MOTORREDUCTORES (50Hz)

1.50 kW

n2 [rpm]	M2 [Nm]	fs	i	Reductor	Motor	Fr2 D [N]	Fr2 C-L [N]
25.8	533	1.1	55.00	S062	90L4	10000	4000
25.8	533	1.9	54.27	S082	90LA4	18000	7151
25.8	534	2.4	55.14	S102	90L4	22000	8920
25.7	540	1.2	36.57	S062	100L6	10000	4000
25.7	524	1.1	55.29	S063	90L4	10000	4000
25.7	506	2.4	110.55	S103	90S2	22000	8948
25.5	540	1.1	55.00	S062	90LA4	10000	4000
25.4	546	1.2	36.57	S062	100LA6	10000	4000
25.4	542	2.4	55.14	S102	90LA4	22000	8958
25.4	511	2.3	110.55	S103	80C2	22000	8977
25.3	532	1.1	55.29	S063	90LA4	10000	4000
24.5	566	2.8	38.30	S102	100L6	22000	9000
24.3	572	2.8	38.30	S102	100LA6	22000	9000
24.2	557	1.1	58.72	S063	90L4	10000	4000
24.2	536	1.4	117.17	S083	90S2	18000	7200
24.0	542	1.4	117.17	S083	80C2	18000	7200
23.9	582	1.1	39.38	S062	100L6	10000	4000
23.9	575	2.8	59.40	S102	90L4	22000	9000
23.8	565	1.1	58.72	S063	90LA4	10000	4000
23.6	588	1.1	39.38	S062	100LA6	10000	4000
23.6	583	2.7	59.40	S102	90LA4	22000	9000
23.5	592	1.8	40.05	S082	100L6	18000	7200
23.4	555	2.2	121.29	S103	90S2	22000	9000
23.2	598	1.8	40.05	S082	100LA6	18000	7200
23.2	561	2.1	121.29	S103	80C2	22000	9000
23.0	564	4.0	123.33	S123	90S2	30000	11200
22.9	600	1.7	61.98	S082	90L4	18000	7200
22.8	570	3.9	123.33	S123	80C2	30000	11200
22.6	609	1.6	61.98	S082	90LA4	18000	7200
22.1	589	1.3	128.73	S083	90S2	18000	7200
22.1	628	2.3	42.53	S102	100L6	22000	9000
22.1	589	2.0	128.73	S103	90S2	22000	9000
21.9	635	2.3	42.53	S102	100LA6	22000	9000
21.8	636	1.7	43.05	S082	100L6	18000	7200
21.8	595	1.3	128.73	S083	80C2	18000	7200
21.8	595	2.0	128.73	S103	80C2	22000	9000
21.8	595	3.8	130.04	S123	90S2	30000	11200
21.6	624	1.0	65.85	S063	90L4	10000	4000
21.6	643	1.6	43.05	S082	100LA6	18000	7200
21.6	601	3.7	130.04	S123	80C2	30000	11200
21.5	645	1.0	43.64	S062	100L6	10000	4000
21.4	650	2.1	44.00	S102	100L6	22000	9000
21.3	652	1.0	43.64	S062	100LA6	10000	4000
21.3	633	0.9	65.85	S063	90LA4	10000	4000
21.2	612	3.7	133.78	S123	90S2	30000	11200

5.1 S MOTORREDUCTORES (50Hz)

1.50 kW

n2 [rpm]	M2 [Nm]	fs	i	Reductor	Motor	Fr2 D [N]	Fr2 C-L [N]
21.1	657	2.1	44.00	S102	100LA6	22000	9000
21.1	659	3.8	44.63	S122	100L6	30000	11200
21.0	653	0.9	67.47	S062	90L4	10000	4000
21.0	640	1.6	67.52	S083	90L4	18000	7200
21.0	619	3.6	133.78	S123	80C2	30000	11200
20.9	657	2.4	67.84	S102	90L4	22000	9000
20.8	663	0.9	67.47	S062	90LA4	10000	4000
20.8	647	0.9	68.25	S063	90L4	10000	4000
20.8	624	1.2	136.34	S083	90S2	18000	7200
20.8	667	3.8	44.63	S122	100LA6	30000	11200
20.7	649	1.5	67.52	S083	90LA4	18000	7200
20.6	630	1.2	136.34	S083	80C2	18000	7200
20.6	666	2.4	67.84	S102	90LA4	22000	9000
20.5	656	0.9	68.25	S063	90LA4	10000	4000
20.1	646	1.9	141.24	S103	90S2	22000	9000
19.9	696	2.4	47.13	S102	100L6	22000	9000
19.9	653	1.8	141.24	S103	80C2	22000	9000
19.7	704	2.4	47.13	S102	100LA6	22000	9000
19.2	725	3.5	49.04	S122	100L6	30000	11200
19.1	703	1.4	74.18	S083	90L4	18000	7200
19.1	703	2.3	74.18	S103	90L4	22000	9000
19.0	732	3.4	49.04	S122	100LA6	30000	11200
18.9	713	1.4	74.18	S083	90LA4	18000	7200
18.9	713	2.2	74.18	S103	90LA4	22000	9000
18.8	693	3.2	151.43	S123	90S2	30000	11200
18.7	742	1.4	50.25	S082	100L6	18000	7200
18.7	742	2.0	50.25	S102	100L6	22000	9000
18.6	700	3.2	151.43	S123	80C2	30000	11200
18.5	750	1.4	50.25	S082	100LA6	18000	7200
18.5	750	2.0	50.25	S102	100LA6	22000	9000
17.9	726	1.0	158.76	S083	90S2	18000	7200
17.7	734	1.0	158.76	S083	80C2	18000	7200
17.5	794	3.4	53.75	S122	100L6	30000	11200
17.4	775	1.3	81.71	S083	90L4	18000	7200
17.4	772	2.1	81.39	S103	90L4	22000	9000
17.3	802	1.3	54.27	S082	100L6	18000	7200
17.3	803	3.4	53.75	S122	100LA6	30000	11200
17.2	783	2.0	81.39	S103	90LA4	22000	9000
17.1	810	1.3	54.27	S082	100LA6	18000	7200
17.1	786	1.3	81.71	S083	90LA4	18000	7200
17.0	815	1.7	55.14	S102	100L6	22000	9000
16.9	823	1.7	55.14	S102	100LA6	22000	9000
16.3	795	1.5	173.78	S103	90S2	22000	9000
16.2	804	1.5	173.78	S103	80C2	22000	9000
16.0	812	2.8	177.53	S123	90S2	30000	11200

5.1 S MOTORREDUCTORES (50Hz)

1.50 kW

n2 [rpm]	M2 [Nm]	fs	i	Reductor	Motor	Fr2 D [N]	Fr2 C-L [N]
15.8	878	1.9	59.40	S102	100L6	22000	9000
15.8	851	1.9	89.77	S103	90L4	22000	9000
15.8	821	2.7	177.53	S123	80C2	30000	11200
15.7	887	1.9	59.40	S102	100LA6	22000	9000
15.6	863	1.9	89.77	S103	90LA4	22000	9000
15.5	868	1.2	91.49	S083	90L4	18000	7200
15.3	880	1.1	91.49	S083	90LA4	18000	7200
15.2	916	1.1	61.98	S082	100L6	18000	7200
15.1	863	1.4	188.51	S103	90S2	22000	9000
15.0	926	1.1	61.98	S082	100LA6	18000	7200
14.9	872	1.4	188.51	S103	80C2	22000	9000
14.6	890	2.5	194.59	S123	90S2	30000	11200
14.5	938	3.0	64.84	S123	100L6	30000	11200
14.4	900	2.5	194.59	S123	80C2	30000	11200
14.3	948	3.0	64.84	S123	100LA6	30000	11200
14.2	950	1.7	100.15	S103	90L4	22000	9000
14.2	975	3.2	66.00	S122	100L6	30000	11200
14.1	954	1.0	100.62	S083	90L4	18000	7200
14.1	986	3.2	66.00	S122	100LA6	30000	11200
14.0	963	1.7	100.15	S103	90LA4	22000	9000
14.0	929	1.3	203.11	S103	90S2	22000	9000
13.9	977	1.1	67.52	S083	100L6	18000	7200
13.9	968	1.0	100.62	S083	90LA4	18000	7200
13.9	1002	1.7	67.84	S102	100L6	22000	9000
13.8	987	1.1	67.52	S083	100LA6	18000	7200
13.8	939	1.3	203.11	S103	80C2	22000	9000
13.7	1013	1.7	67.84	S102	100LA6	22000	9000
13.2	1028	2.8	71.07	S123	100L6	30000	11200
13.2	986	2.3	215.60	S123	90S2	30000	11200
13.1	1039	2.7	71.07	S123	100LA6	30000	11200
13.0	997	2.3	215.60	S123	80C2	30000	11200
12.8	1048	1.5	110.55	S103	90L4	22000	9000
12.7	1073	1.0	74.18	S083	100L6	18000	7200
12.7	1073	1.6	74.18	S103	100L6	22000	9000
12.7	1063	1.5	110.55	S103	90LA4	22000	9000
12.7	1020	1.2	222.85	S103	90S2	22000	9000
12.6	1031	1.2	222.85	S103	80C2	22000	9000
12.6	1028	1.2	224.76	S103	90S2	22000	9000
12.6	1067	2.8	112.52	S123	90L4	30000	11200
12.5	1085	1.0	74.18	S083	100LA6	18000	7200
12.5	1039	1.2	224.76	S103	80C2	22000	9000
12.5	1085	1.5	74.18	S103	100LA6	22000	9000
12.4	1082	2.8	112.52	S123	90LA4	30000	11200
12.2	1103	0.9	117.17	S083	90L4	18000	7200
12.0	1135	2.8	78.46	S123	100L6	30000	11200

5.1 S MOTORREDUCTORES (50Hz)

1.50 kW

n2 [rpm]	M2 [Nm]	fs	i	Reductor	Motor	Fr2 D [N]	Fr2 C-L [N]
11.9	1147	2.7	78.46	S123	100LA6	30000	11200
11.9	1093	2.1	238.93	S123	90S2	30000	11200
11.8	1105	2.0	238.93	S123	80C2	30000	11200
11.8	1150	3.9	79.45	S143	100L6	35000	18500
11.7	1150	1.4	121.29	S103	90L4	22000	9000
11.7	1162	3.8	79.45	S143	100LA6	35000	18500
11.5	1167	1.4	121.29	S103	90LA4	22000	9000
11.5	1178	1.4	81.39	S103	100L6	22000	9000
11.5	1169	2.6	123.33	S123	90L4	30000	11200
11.4	1190	1.4	81.39	S103	100LA6	22000	9000
11.4	1186	2.5	123.33	S123	90LA4	30000	11200
11.1	1169	1.9	255.54	S123	90S2	30000	11200
11.0	1221	1.3	128.73	S103	90L4	22000	9000
11.0	1182	1.9	255.54	S123	80C2	30000	11200
10.9	1238	1.3	128.73	S103	90LA4	22000	9000
10.9	1233	2.4	130.04	S123	90L4	30000	11200
10.8	1263	2.5	87.27	S123	100L6	30000	11200
10.8	1251	2.4	130.04	S123	90LA4	30000	11200
10.7	1276	2.5	87.27	S123	100LA6	30000	11200
10.6	1269	2.4	133.78	S123	90L4	30000	11200
10.5	1299	1.3	89.77	S103	100L6	22000	9000
10.5	1287	2.3	133.78	S123	90LA4	30000	11200
10.4	1313	1.3	89.77	S103	100LA6	22000	9000
10.1	1339	1.2	141.24	S103	90L4	22000	9000
10.1	1282	1.8	280.10	S123	90S2	30000	11200
10.0	1295	1.7	280.10	S123	80C2	30000	11200
9.9	1358	1.2	141.24	S103	90LA4	22000	9000
9.5	1430	3.3	98.81	S143	100L6	35000	18500
9.4	1449	1.2	100.15	S103	100L6	22000	9000
9.4	1436	2.1	151.43	S123	90L4	30000	11200
9.4	1378	1.6	301.16	S123	90S2	30000	11200
9.4	1445	3.2	98.81	S143	100LA6	35000	18500
9.3	1465	1.1	100.15	S103	100LA6	22000	9000
9.3	1393	1.6	301.16	S123	80C2	30000	11200
9.2	1457	2.1	151.43	S123	90LA4	30000	11200
8.9	1532	2.1	105.91	S123	100L6	30000	11200
8.8	1549	2.0	105.91	S123	100LA6	30000	11200
8.5	1599	1.1	110.55	S103	100L6	22000	9000
8.5	1592	3.1	110.05	S143	100L6	35000	18500
8.5	1609	3.1	110.05	S143	100LA6	35000	18500
8.4	1617	1.0	110.55	S103	100LA6	22000	9000
8.4	1628	1.9	112.52	S123	100L6	30000	11200
8.3	1645	1.9	112.52	S123	100LA6	30000	11200
8.3	1574	1.4	343.93	S123	90S2	30000	11200
8.2	1648	1.0	173.78	S103	90L4	22000	9000

5.1 S MOTORREDUCTORES (50Hz)

1.50 kW

n2 [rpm]	M2 [Nm]	fs	i	Reductor	Motor	Fr2 D [N]	Fr2 C-L [N]
8.2	1590	1.4	343.93	S123	80C2	30000	11200
8.1	1671	1.0	173.78	S103	90LA4	22000	9000
8.0	1683	1.8	177.53	S123	90L4	30000	11200
7.9	1708	1.8	177.53	S123	90LA4	30000	11200
7.7	1755	1.0	121.29	S103	100L6	22000	9000
7.7	1774	0.9	121.29	S103	100LA6	22000	9000
7.6	1775	0.9	188.51	S103	90L4	22000	9000
7.6	1784	1.8	123.33	S123	100L6	30000	11200
7.6	1786	2.8	123.44	S143	100L6	35000	18500
7.5	1804	1.7	123.33	S123	100LA6	30000	11200
7.5	1805	2.8	123.44	S143	100LA6	35000	18500
7.3	1862	0.9	128.73	S103	100L6	22000	9000
7.3	1845	1.6	194.59	S123	90L4	30000	11200
7.2	1882	1.7	130.04	S123	100L6	30000	11200
7.2	1902	1.7	130.04	S123	100LA6	30000	11200
7.2	1872	1.6	194.59	S123	90LA4	30000	11200
7.0	1936	1.6	133.78	S123	100L6	30000	11200
7.0	1956	1.6	133.78	S123	100LA6	30000	11200
6.7	2020	2.5	139.64	S143	100L6	35000	18500
6.7	2042	2.5	139.64	S143	100LA6	35000	18500
6.6	2044	1.5	215.60	S123	90L4	30000	11200
6.5	2074	1.4	215.60	S123	90LA4	30000	11200
6.3	2157	2.3	149.10	S143	100L6	35000	18500
6.2	2191	1.4	151.43	S123	100L6	30000	11200
6.2	2180	2.3	149.10	S143	100LA6	35000	18500
6.1	2215	1.4	151.43	S123	100LA6	30000	11200
6.0	2279	1.8	157.49	S143	100L6	35000	18500
5.9	2266	1.3	238.93	S123	90L4	30000	11200
5.9	2298	1.3	238.93	S123	90LA4	30000	11200
5.9	2303	1.7	157.49	S143	100LA6	35000	18500
5.6	2423	1.2	255.54	S123	90L4	30000	11200
5.5	2458	1.2	255.54	S123	90LA4	30000	11200
5.5	2482	2.0	171.55	S143	100L6	35000	18500
5.4	2509	2.0	171.55	S143	100LA6	35000	18500
5.4	2538	1.8	175.41	S143	100L6	35000	18500
5.3	2569	1.2	177.53	S123	100L6	30000	11200
5.3	2565	1.7	175.41	S143	100LA6	35000	18500
5.2	2596	1.2	177.53	S123	100LA6	30000	11200
5.1	2656	1.1	280.10	S123	90L4	30000	11200
5.0	2694	1.1	280.10	S123	90LA4	30000	11200
4.8	2815	1.1	194.59	S123	100L6	30000	11200
4.8	2846	1.1	194.59	S123	100LA6	30000	11200
4.8	2846	1.8	196.74	S143	100L6	35000	18500
4.7	2856	1.1	301.16	S123	90L4	30000	11200
4.7	2877	1.7	196.74	S143	100LA6	35000	18500

5.1 S MOTORREDUCTORES (50Hz)

1.50 kW

n2 [rpm]	M2 [Nm]	fs	i	Reductor	Motor	Fr2 D [N]	Fr2 C-L [N]
4.6	2897	1.0	301.16	S123	90LA4	30000	11200
4.4	3119	1.0	215.60	S123	100L6	30000	11200
4.3	3153	1.0	215.60	S123	100LA6	30000	11200
4.2	3220	1.5	222.57	S143	100L6	35000	18500
4.2	3255	1.5	222.57	S143	100LA6	35000	18500
4.1	3261	0.9	343.93	S123	90L4	30000	11200
4.1	3308	0.9	343.93	S123	90LA4	30000	11200
4.0	3438	1.5	237.63	S143	100L6	35000	18500
3.9	3457	0.9	238.93	S123	100L6	30000	11200
3.9	3494	0.9	238.93	S123	100LA6	30000	11200
3.9	3475	1.5	237.63	S143	100LA6	35000	18500
3.4	3956	1.3	273.41	S143	100L6	35000	18500
3.4	3998	1.3	273.41	S143	100LA6	35000	18500

1.85 kW

n2 [rpm]	M2 [Nm]	fs	i	Reductor	Motor	Fr2 D [N]	Fr2 C-L [N]
175.0	97	3.4	8.00	S062	90LB4	6703	2681
162.3	104	1.6	8.63	S052	90LB4	3756	3756
156.9	108	3.1	8.92	S062	90LB4	6900	2760
146.7	116	3.1	9.55	S062	90LB4	7023	2809
131.5	129	2.8	10.65	S062	90LB4	7223	2889
125.7	135	1.4	11.14	S052	90LB4	3963	3963
119.6	142	2.7	11.71	S062	90LB4	7398	2959
116.7	145	1.4	12.00	S052	90LB4	4021	4021
116.3	147	2.4	8.00	S062	100LB6	7441	2976
107.8	159	1.1	8.63	S052	100LB6	4071	4071
107.2	158	2.7	13.06	S062	90LB4	7599	3039
104.8	162	2.6	13.36	S062	90LB4	7640	3056
104.2	164	2.1	8.92	S062	100LB6	7640	3056
102.5	165	1.3	13.66	S052	90LB4	4116	4116
97.4	176	2.1	9.55	S062	100LB6	7763	3105
93.5	183	3.7	9.94	S082	100LB6	16905	4830
91.7	185	1.3	15.27	S052	90LB4	4193	4193
87.8	193	2.3	15.94	S062	90LB4	7962	3185
87.4	196	1.9	10.65	S062	100LB6	7960	3184
86.6	196	2.3	16.16	S062	90LB4	7987	3195
86.0	197	1.2	16.29	S052	90LB4	4235	4235
83.5	205	1.0	11.14	S052	100LB6	4241	4241
80.9	210	3.7	17.29	S082	90LB4	17673	5049
80.1	214	3.4	11.61	S082	100LB6	17721	5063
79.4	216	1.9	11.71	S062	100LB6	8129	3252
77.5	221	1.0	12.00	S052	100LB6	4284	4284
75.1	226	1.1	18.63	S052	90LB4	4314	4314

5.1 S MOTORREDUCTORES (50Hz)

1.85 kW

n2 [rpm]	M2 [Nm]	fs	i	Reductor	Motor	Fr2 D [N]	Fr2 C-L [N]
73.6	231	3.3	19.03	S082	90LB4	18000	5198
72.9	235	3.4	12.75	S082	100LB6	18000	5209
72.6	234	1.9	19.29	S062	90LB4	8302	3321
71.6	237	1.9	19.55	S062	90LB4	8325	3330
71.2	241	1.8	13.06	S062	100LB6	8320	3328
71.0	239	1.0	19.73	S052	90LB4	4344	4344
69.6	246	1.8	13.36	S062	100LB6	8359	3343
69.5	244	3.2	20.14	S082	90LB4	18000	5287
66.6	255	1.0	21.04	S052	90LB4	4375	4375
66.2	259	3.1	14.04	S082	100LB6	18000	5363
65.0	261	1.0	21.53	S052	90LB4	4385	4385
63.3	268	3.0	22.13	S082	90LB4	18000	5439
60.4	281	1.7	23.18	S062	90LB4	8615	3446
60.3	284	2.8	15.43	S082	100LB6	18000	5515
59.1	290	2.8	15.73	S082	100LB6	18000	5547
58.9	288	1.6	23.75	S062	90LB4	8655	3462
58.4	294	1.6	15.94	S062	100LB6	8653	3461
58.3	291	2.8	24.00	S082	90LB4	18000	5572
57.5	298	1.6	16.16	S062	100LB6	8675	3470
55.7	305	1.6	25.14	S062	90LB4	8747	3499
55.6	305	0.9	25.20	S052	90LB4	4442	4442
54.3	312	0.9	25.79	S052	90LB4	4448	4448
53.8	319	2.5	17.29	S082	100LB6	18000	5705
53.7	316	2.5	26.05	S082	90LB4	18000	5709
51.3	331	2.7	27.29	S082	90LB4	18000	5788
50.6	335	1.4	27.66	S062	90LB4	8895	3558
48.9	351	2.3	19.03	S082	100LB6	18000	5868
48.8	347	2.6	28.67	S082	90LB4	18000	5872
48.2	355	1.3	19.29	S062	100LB6	8945	3578
47.6	360	1.3	19.55	S062	100LB6	8964	3586
47.3	359	2.5	29.60	S082	90LB4	18000	5927
46.7	363	1.4	30.00	S062	90LB4	9014	3606
46.2	371	2.2	20.14	S082	100LB6	18000	5965
44.7	384	3.8	20.83	S102	100LB6	22000	7485
44.1	385	2.6	31.78	S082	90LB4	18000	6051
43.2	393	3.8	32.40	S102	90LB4	22000	7562
42.0	408	2.1	22.13	S082	100LB6	18000	6130
42.0	408	3.6	22.13	S102	100LB6	22000	7623
41.7	398	1.5	33.57	S063	90LB4	9222	3689
41.3	411	1.3	33.93	S062	90LB4	9182	3673
40.1	427	1.2	23.18	S062	100LB6	9191	3676
40.1	423	2.4	34.91	S082	90LB4	18000	6217
40.1	423	3.3	34.91	S102	90LB4	22000	7736
39.4	430	2.3	35.50	S082	90LB4	18000	6247
39.2	437	1.1	23.75	S062	100LB6	9220	3688

5.1 S MOTORREDUCTORES (50Hz)

1.85 kW

n2 [rpm]	M2 [Nm]	fs	i	Reductor	Motor	Fr2 D [N]	Fr2 C-L [N]
38.8	442	1.9	24.00	S082	100LB6	18000	6275
38.3	443	1.4	36.57	S062	90LB4	9274	3710
38.3	447	3.5	24.28	S102	100LB6	22000	7840
37.1	448	1.3	37.77	S063	90LB4	9372	3749
37.0	463	1.1	25.14	S062	100LB6	9285	3714
36.6	464	3.2	38.30	S102	90LB4	22000	7955
35.7	480	1.8	26.05	S082	100LB6	18000	6423
35.6	477	1.3	39.38	S062	90LB4	9357	3743
35.3	485	3.2	26.33	S102	100LB6	22000	8034
35.0	475	1.3	40.05	S063	90LB4	9439	3776
35.0	485	2.1	40.05	S082	90LB4	18000	6466
34.1	503	1.9	27.29	S082	100LB6	18000	6508
33.6	509	1.0	27.66	S062	100LB6	9382	3753
32.9	515	2.7	42.53	S102	90LB4	22000	8209
32.5	522	1.9	43.05	S082	90LB4	18000	6599
32.4	528	1.8	28.67	S082	100LB6	18000	6599
32.1	529	1.1	43.64	S062	90LB4	9457	3783
31.8	533	2.4	44.00	S102	90LB4	22000	8293
31.4	545	1.7	29.60	S082	100LB6	18000	6657
31.1	550	2.9	29.87	S102	100LB6	22000	8342
31.0	553	1.0	30.00	S062	100LB6	9451	3780
30.4	558	1.1	46.10	S062	90LB4	9502	3801
29.7	571	2.8	47.13	S102	90LB4	22000	8464
29.3	585	1.8	31.78	S082	100LB6	18000	6790
29.0	585	1.0	48.30	S062	90LB4	9535	3814
28.7	597	2.6	32.40	S102	100LB6	22000	8546
28.5	583	1.0	49.13	S063	90LB4	9625	3850
27.9	609	1.6	50.25	S082	90LB4	18000	6888
27.9	609	2.3	50.25	S102	90LB4	22000	8626
27.4	625	0.9	33.93	S062	100LB6	9529	3812
26.6	643	1.6	34.91	S082	100LB6	18000	6967
26.6	643	2.3	34.91	S102	100LB6	22000	8736
26.2	648	0.9	53.53	S062	90LB4	9591	3836
26.2	654	1.6	35.50	S082	100LB6	18000	6999
26.0	651	4.0	53.75	S122	90LB4	30000	11200
25.8	657	1.5	54.27	S082	90LB4	18000	7034
25.5	666	0.9	55.00	S062	90LB4	9601	3840
25.4	674	0.9	36.57	S062	100LB6	9559	3824
25.4	668	1.9	55.14	S102	90LB4	22000	8864
25.3	656	0.9	55.29	S063	90LB4	9691	3876
24.3	706	2.2	38.30	S102	100LB6	22000	8976
23.6	720	2.2	59.40	S102	90LB4	22000	9000
23.2	738	1.4	40.05	S082	100LB6	18000	7200
22.6	751	1.3	61.98	S082	90LB4	18000	7200
21.9	783	1.9	42.53	S102	100LB6	22000	9000

5.1 S MOTORREDUCTORES (50Hz)

1.85 kW

n2 [rpm]	M2 [Nm]	fs	i	Reductor	Motor	Fr2 D [N]	Fr2 C-L [N]
21.6	793	1.3	43.05	S082	100LB6	18000	7200
21.3	803	3.9	43.60	S122	100LB6	30000	11200
21.2	800	3.8	66.00	S122	90LB4	30000	11200
21.1	810	1.7	44.00	S102	100LB6	22000	9000
20.8	822	3.1	44.63	S122	100LB6	30000	11200
20.7	801	1.2	67.52	S083	90LB4	18000	7200
20.6	822	1.9	67.84	S102	90LB4	22000	9000
19.7	868	1.9	47.13	S102	100LB6	22000	9000
19.0	903	2.8	49.04	S122	100LB6	30000	11200
18.9	880	1.1	74.18	S083	90LB4	18000	7200
18.9	880	1.8	74.18	S103	90LB4	22000	9000
18.5	926	1.1	50.25	S082	100LB6	18000	7200
18.5	926	1.6	50.25	S102	100LB6	22000	9000
17.3	990	2.8	53.75	S122	100LB6	30000	11200
17.2	966	1.7	81.39	S103	90LB4	22000	9000
17.1	1000	1.1	54.27	S082	100LB6	18000	7200
17.1	969	1.0	81.71	S083	90LB4	18000	7200
16.9	1016	1.3	55.14	S102	100LB6	22000	9000
15.7	1094	1.5	59.40	S102	100LB6	22000	9000
15.6	1065	1.5	89.77	S103	90LB4	22000	9000
15.3	1085	0.9	91.49	S083	90LB4	18000	7200
15.0	1142	0.9	61.98	S082	100LB6	18000	7200
14.3	1169	2.4	64.84	S123	100LB6	30000	11200
14.1	1216	2.6	66.00	S122	100LB6	30000	11200
14.0	1188	1.3	100.15	S103	90LB4	22000	9000
13.7	1250	1.3	67.84	S102	100LB6	22000	9000
13.1	1282	2.2	71.07	S123	100LB6	30000	11200
12.7	1311	1.2	110.55	S103	90LB4	22000	9000
12.5	1338	1.3	74.18	S103	100LB6	22000	9000
12.4	1335	2.2	112.52	S123	90LB4	30000	11200
11.9	1415	2.2	78.46	S123	100LB6	30000	11200
11.7	1433	3.1	79.45	S143	100LB6	35000	18500
11.5	1439	1.1	121.29	S103	90LB4	22000	9000
11.4	1468	1.1	81.39	S103	100LB6	22000	9000
11.4	1463	2.1	123.33	S123	90LB4	30000	11200
10.9	1527	1.0	128.73	S103	90LB4	22000	9000
10.8	1543	1.9	130.04	S123	90LB4	30000	11200
10.7	1574	2.0	87.27	S123	100LB6	30000	11200
10.5	1587	1.9	133.78	S123	90LB4	30000	11200
10.4	1619	1.0	89.77	S103	100LB6	22000	9000
9.9	1675	1.0	141.24	S103	90LB4	22000	9000
9.4	1782	2.6	98.81	S143	100LB6	35000	18500
9.3	1806	0.9	100.15	S103	100LB6	22000	9000
9.2	1796	1.7	151.43	S123	90LB4	30000	11200
8.8	1910	1.6	105.91	S123	100LB6	30000	11200

5.1 S MOTORREDUCTORES (50Hz)

1.85 kW

n2 [rpm]	M2 [Nm]	fs	i	Reductor	Motor	Fr2 D [N]	Fr2 C-L [N]
8.5	1985	2.5	110.05	S143	100LB6	35000	18500
8.3	2029	1.6	112.52	S123	100LB6	30000	11200
7.9	2106	1.4	177.53	S123	90LB4	30000	11200
7.5	2224	1.4	123.33	S123	100LB6	30000	11200
7.5	2226	2.2	123.44	S143	100LB6	35000	18500
7.2	2345	1.3	130.04	S123	100LB6	30000	11200
7.2	2308	1.3	194.59	S123	90LB4	30000	11200
7.0	2413	1.3	133.78	S123	100LB6	30000	11200
6.7	2519	2.0	139.64	S143	100LB6	35000	18500
6.5	2558	1.2	215.60	S123	90LB4	30000	11200
6.2	2689	1.9	149.10	S143	100LB6	35000	18500
6.1	2731	1.2	151.43	S123	100LB6	30000	11200
5.9	2834	1.1	238.93	S123	90LB4	30000	11200
5.9	2840	1.4	157.49	S143	100LB6	35000	18500
5.5	3031	1.0	255.54	S123	90LB4	30000	11200
5.4	3094	1.6	171.55	S143	100LB6	35000	18500
5.3	3164	1.4	175.41	S143	100LB6	35000	18500
5.2	3202	1.0	177.53	S123	100LB6	30000	11200
5.0	3323	0.9	280.10	S123	90LB4	30000	11200
4.7	3548	1.4	196.74	S143	100LB6	35000	18500
4.2	4014	1.2	222.57	S143	100LB6	35000	18500
3.9	4286	1.2	237.63	S143	100LB6	35000	18500
3.4	4931	1.0	273.41	S143	100LB6	35000	18500

2.20 kW

n2 [rpm]	M2 [Nm]	fs	i	Reductor	Motor	Fr2 D [N]	Fr2 C-L [N]
331.6	59	2.2	8.63	S052	90L2	3106	3106
270.5	72	3.8	10.65	S062	90L2	5881	2353
256.7	76	1.9	11.14	S052	90L2	3310	3310
244.3	80	3.7	11.71	S062	90L2	6050	2420
238.3	82	1.8	12.00	S052	90L2	3369	3369
219.0	89	3.5	13.06	S062	90L2	6232	2493
214.1	91	3.5	13.36	S062	90L2	6270	2508
209.4	93	1.7	13.66	S052	90L2	3471	3471
187.3	104	1.7	15.27	S052	90L2	3558	3558
182.5	111	3.0	8.00	S062	112MR4	6516	2606
180.7	108	3.1	15.94	S062	90L2	6557	2623
177.5	114	2.9	8.00	S062	100LA4	6563	2625
176.9	110	3.1	16.16	S062	90L2	6593	2637
175.6	111	1.6	16.29	S052	90L2	3607	3607
169.3	119	1.4	8.63	S052	112MR4	3611	3611
164.6	123	1.4	8.63	S052	100LA4	3631	3631
163.6	123	2.7	8.92	S062	112MR4	6700	2680

5.1 S MOTORREDUCTORES (50Hz)

2.20 kW

n2 [rpm]	M2 [Nm]	fs	i	Reductor	Motor	Fr2 D [N]	Fr2 C-L [N]
159.2	127	2.6	8.92	S062	100LA4	6747	2699
153.5	127	1.4	18.63	S052	90L2	3708	3708
153.0	132	2.7	9.55	S062	112MR4	6814	2726
148.8	136	2.7	9.55	S062	100LA4	6861	2744
148.3	131	2.6	19.29	S062	90L2	6896	2758
146.3	133	2.6	19.55	S062	90L2	6920	2768
145.0	134	1.3	19.73	S052	90L2	3749	3749
137.2	147	2.4	10.65	S062	112MR4	6998	2799
136.0	143	1.4	21.04	S052	90L2	3794	3794
133.4	151	2.4	10.65	S062	100LA4	7045	2818
132.8	147	1.3	21.53	S052	90L2	3810	3810
131.1	154	1.2	11.14	S052	112MR4	3788	3788
130.8	156	3.7	7.34	S082	112M6	15160	4332
129.3	151	4.0	22.13	S082	90L2	15239	4354
127.5	158	1.2	11.14	S052	100LA4	3806	3806
126.7	161	3.6	7.34	S082	112MA6	15309	4374
124.7	162	2.4	11.71	S062	112MR4	7158	2863
123.4	158	2.2	23.18	S062	90L2	7212	2885
121.7	166	1.2	12.00	S052	112MR4	3835	3835
121.3	166	2.3	11.71	S062	100LA4	7204	2882
120.4	162	2.2	23.75	S062	90L2	7253	2901
120.0	170	2.0	8.00	S062	112M6	7211	2885
119.2	163	3.7	24.00	S082	90L2	15625	4464
119.1	171	3.7	8.06	S082	112M6	15604	4458
118.8	164	1.2	24.07	S052	90L2	3884	3884
118.3	170	1.2	12.00	S052	100LA4	3852	3852
116.3	175	2.0	8.00	S062	112MA6	7264	2906
115.3	177	3.6	8.06	S082	112MA6	15756	4502
113.8	171	2.1	25.14	S062	90L2	7350	2940
113.5	171	1.3	25.20	S052	90L2	3914	3914
111.8	180	2.3	13.06	S062	112MR4	7340	2936
111.3	183	1.0	8.63	S052	112M6	3878	3878
110.9	175	1.2	25.79	S052	90L2	3928	3928
109.8	177	3.4	26.05	S082	90L2	16022	4578
109.3	185	2.3	13.36	S062	112MR4	7377	2951
108.7	185	2.3	13.06	S062	100LA4	7386	2954
107.8	189	0.9	8.63	S052	112MA6	3896	3896
107.6	189	1.8	8.92	S062	112M6	7391	2956
106.9	189	1.1	13.66	S052	112MR4	3912	3912
106.3	190	2.2	13.36	S062	100LA4	7423	2969
104.8	186	3.6	27.29	S082	90L2	16251	4643
104.2	195	1.8	8.92	S062	112MA6	7443	2977
104.0	194	1.1	13.66	S052	100LA4	3927	3927
104.0	194	3.9	14.04	S082	112MR4	16269	4648
103.4	188	1.9	27.66	S062	90L2	7511	3005

5.1 S MOTORREDUCTORES (50Hz)

2.20 kW

n2 [rpm]	M2 [Nm]	fs	i	Reductor	Motor	Fr2 D [N]	Fr2 C-L [N]
102.8	189	1.1	27.81	S052	90L2	3973	3973
101.1	199	3.8	14.04	S082	100LA4	16407	4688
100.6	203	1.9	9.55	S062	112M6	7501	3000
99.7	195	3.5	28.67	S082	90L2	16498	4714
97.4	209	1.8	9.55	S062	112MA6	7552	3021
96.6	201	3.4	29.60	S082	90L2	16658	4759
96.5	211	3.2	9.94	S082	112M6	16631	4752
95.6	211	1.1	15.27	S052	112MR4	3970	3970
95.3	204	1.1	30.00	S052	90L2	4015	4015
95.3	204	1.8	30.00	S062	90L2	7647	3059
94.6	213	3.6	15.43	S082	112MR4	16739	4783
93.5	218	3.1	9.94	S082	112MA6	16791	4797
93.0	217	1.1	15.27	S052	100LA4	3984	3984
92.8	217	3.5	15.73	S082	112MR4	16835	4810
92.0	219	3.5	15.43	S082	100LA4	16880	4823
91.6	220	2.0	15.94	S062	112MR4	7664	3066
90.3	223	2.0	16.16	S062	112MR4	7686	3075
90.3	223	3.4	15.73	S082	100LA4	16977	4851
90.2	226	1.7	10.65	S062	112M6	7675	3070
90.0	216	3.5	31.78	S082	90L2	17019	4863
89.6	225	1.1	16.29	S052	112MR4	4000	4000
89.1	226	2.0	15.94	S062	100LA4	7708	3083
87.9	222	1.0	32.55	S052	90L2	4056	4056
87.9	230	2.0	16.16	S062	100LA4	7730	3092
87.4	233	1.6	10.65	S062	112MA6	7725	3090
87.2	231	1.0	16.29	S052	100LA4	4012	4012
86.7	225	1.0	33.00	S052	90L2	4062	4062
85.2	224	2.0	33.57	S063	90L2	7861	3144
84.4	239	3.2	17.29	S082	112MR4	17324	4950
84.3	231	1.8	33.93	S062	90L2	7848	3139
82.7	246	3.0	11.61	S082	112M6	17422	4978
82.1	246	3.1	17.29	S082	100LA4	17469	4991
82.0	248	1.6	11.71	S062	112M6	7823	3129
81.9	238	3.2	34.91	S082	90L2	17508	5002
80.6	242	3.1	35.50	S082	90L2	17597	5028
80.1	254	2.9	11.61	S082	112MA6	17588	5025
79.4	256	1.6	11.71	S062	112MA6	7871	3148
78.8	247	1.0	36.55	S052	90L2	4103	4103
78.4	257	0.9	18.63	S052	112MR4	4053	4053
78.4	243	1.1	36.50	S053	90L2	4135	4135
78.2	249	1.8	36.57	S062	90L2	7968	3187
76.7	263	2.9	19.03	S082	112MR4	17825	5093
76.2	265	0.9	18.63	S052	100LA4	4062	4062
75.7	266	1.7	19.29	S062	112MR4	7959	3184
75.7	252	1.8	37.77	S063	90L2	8052	3221

5.1 S MOTORREDUCTORES (50Hz)

2.20 kW

n2 [rpm]	M2 [Nm]	fs	i	Reductor	Motor	Fr2 D [N]	Fr2 C-L [N]
75.3	271	2.9	12.75	S082	112M6	17917	5119
75.3	271	3.9	12.75	S102	112M6	22000	6338
74.7	270	1.7	19.55	S062	112MR4	7980	3192
74.6	270	2.8	19.03	S082	100LA4	17973	5135
73.6	274	1.6	19.29	S062	100LA4	8001	3200
73.5	277	1.6	13.06	S062	112M6	7985	3194
72.9	279	2.8	12.75	S082	112MA6	18000	5167
72.9	279	3.8	12.75	S102	112MA6	22000	6400
72.6	278	1.7	19.55	S062	100LA4	8021	3208
72.6	268	1.7	39.38	S062	90L2	8082	3233
72.5	278	2.8	20.14	S082	112MR4	18000	5179
71.9	283	1.6	13.36	S062	112M6	8018	3207
71.4	267	1.7	40.05	S063	90L2	8144	3258
71.4	273	2.8	40.05	S082	90L2	18000	5212
71.2	286	1.5	13.06	S062	112MA6	8031	3213
70.5	286	2.7	20.14	S082	100LA4	18000	5222
69.6	293	1.5	13.36	S062	112MA6	8064	3225
68.4	298	2.7	14.04	S082	112M6	18000	5267
67.3	289	3.6	42.53	S102	90L2	22000	6572
66.4	293	2.6	43.05	S082	90L2	18000	5325
66.2	308	2.6	14.04	S082	112MA6	18000	5317
66.0	306	2.6	22.13	S082	112MR4	18000	5325
65.5	297	1.5	43.64	S062	90L2	8236	3294
65.0	299	3.3	44.00	S102	90L2	22000	6641
64.2	314	2.5	22.13	S082	100LA4	18000	5369
63.0	320	1.5	23.18	S062	112MR4	8222	3289
62.2	327	2.5	15.43	S082	112M6	18000	5415
62.0	314	1.4	46.10	S062	90L2	8314	3326
61.5	328	1.4	23.75	S062	112MR4	8255	3302
61.3	329	1.4	23.18	S062	100LA4	8259	3304
61.0	334	2.4	15.73	S082	112M6	18000	5445
60.8	332	2.4	24.00	S082	112MR4	18000	5454
60.7	321	3.7	47.13	S102	90L2	22000	6783
60.3	338	2.4	15.43	S082	112MA6	18000	5465
60.3	338	3.9	15.43	S102	112MA6	22000	6786
60.2	338	1.4	15.94	S062	112M6	8260	3304
59.8	337	1.4	23.75	S062	100LA4	8291	3316
59.4	343	1.4	16.16	S062	112M6	8278	3311
59.2	329	1.4	48.30	S062	90L2	8379	3352
59.2	341	2.3	24.00	S082	100LA4	18000	5498
59.1	344	2.3	15.73	S082	112MA6	18000	5495
58.4	349	1.4	15.94	S062	112MA6	8301	3320
58.2	327	1.4	49.13	S063	90L2	8447	3379
58.1	347	1.4	25.14	S062	112MR4	8329	3332
57.5	354	1.3	16.16	S062	112MA6	8318	3327

5.1 S MOTORREDUCTORES (50Hz)

2.20 kW

n2 [rpm]	M2 [Nm]	fs	i	Reductor	Motor	Fr2 D [N]	Fr2 C-L [N]
56.9	342	2.2	50.25	S082	90L2	18000	5572
56.9	342	3.1	50.25	S102	90L2	22000	6917
56.5	357	1.3	25.14	S062	100LA4	8364	3346
56.1	360	2.2	26.05	S082	112MR4	18000	5585
55.8	365	3.7	17.21	S102	112M6	22000	6948
55.5	367	2.2	17.29	S082	112M6	18000	5597
54.5	370	2.2	26.05	S082	100LA4	18000	5630
54.0	377	3.6	17.21	S102	112MA6	22000	7016
53.8	379	2.1	17.29	S082	112MA6	18000	5649
53.5	377	2.4	27.29	S082	112MR4	18000	5660
53.4	364	1.2	53.53	S062	90L2	8515	3406
52.8	382	1.3	27.66	S062	112MR4	8445	3378
52.7	369	2.0	54.27	S082	90L2	18000	5698
52.0	374	1.2	55.00	S062	90L2	8549	3419
52.0	388	2.3	27.29	S082	100LA4	18000	5706
51.9	375	2.6	55.14	S102	90L2	22000	7116
51.7	368	1.2	55.29	S063	90L2	8605	3442
51.3	393	1.2	27.66	S062	100LA4	8477	3391
50.9	396	2.3	28.67	S082	112MR4	18000	5741
50.5	404	2.0	19.03	S082	112M6	18000	5753
50.5	403	3.6	19.00	S102	112M6	22000	7159
49.8	409	1.2	19.29	S062	112M6	8486	3394
49.5	407	2.2	28.67	S082	100LA4	18000	5787
49.3	409	2.2	29.60	S082	112MR4	18000	5794
49.1	415	1.2	19.55	S062	112M6	8500	3400
48.9	417	1.9	19.03	S082	112MA6	18000	5805
48.9	416	3.5	19.00	S102	112MA6	22000	7228
48.9	413	3.6	29.87	S102	112MR4	22000	7234
48.7	414	1.2	30.00	S062	112MR4	8536	3414
48.7	391	1.2	58.72	S063	90L2	8679	3472
48.2	422	1.1	19.29	S062	112MA6	8519	3407
48.1	404	3.0	59.40	S102	90L2	22000	7278
48.0	420	2.1	29.60	S082	100LA4	18000	5840
47.7	427	1.9	20.14	S082	112M6	18000	5847
47.6	428	1.1	19.55	S062	112MA6	8532	3413
47.5	424	3.5	29.87	S102	100LA4	22000	7295
47.3	426	1.2	30.00	S062	100LA4	8564	3426
46.2	441	1.8	20.14	S082	112MA6	18000	5900
46.1	422	1.8	61.98	S082	90L2	18000	5919
46.1	442	3.3	20.83	S102	112M6	22000	7360
45.9	439	2.3	31.78	S082	112MR4	18000	5912
45.1	448	3.4	32.40	S102	112MR4	22000	7414
44.7	451	2.2	31.78	S082	100LA4	18000	5959
44.7	456	3.2	20.83	S102	112MA6	22000	7431
43.8	460	3.3	32.40	S102	100LA4	22000	7476

5.1 S MOTORREDUCTORES (50Hz)

2.20 kW

n2 [rpm]	M2 [Nm]	fs	i	Reductor	Motor	Fr2 D [N]	Fr2 C-L [N]
43.4	439	1.0	65.85	S063	90L2	8808	3523
43.4	469	1.8	22.13	S082	112M6	18000	6004
43.4	469	3.1	22.13	S102	112M6	22000	7495
43.0	469	1.2	33.93	S062	112MR4	8654	3462
42.4	450	1.7	67.52	S083	90L2	18000	6074
42.2	462	2.6	67.84	S102	90L2	22000	7575
42.0	485	1.7	22.13	S082	112MA6	18000	6058
42.0	485	3.0	22.13	S102	112MA6	22000	7566
41.9	482	1.1	33.93	S062	100LA4	8677	3471
41.8	482	2.1	34.91	S082	112MR4	18000	6071
41.8	482	2.9	34.91	S102	112MR4	22000	7581
41.4	492	1.0	23.18	S062	112M6	8655	3462
41.1	490	2.0	35.50	S082	112MR4	18000	6099
40.7	496	2.0	34.91	S082	100LA4	18000	6118
40.7	496	2.8	34.91	S102	100LA4	22000	7644
40.4	504	1.0	23.75	S062	112M6	8673	3469
40.1	508	1.0	23.18	S062	112MA6	8679	3471
40.0	509	1.6	24.00	S082	112M6	18000	6142
40.0	504	2.0	35.50	S082	100LA4	18000	6147
39.9	505	1.2	36.57	S062	112MR4	8714	3486
39.5	515	3.1	24.28	S102	112M6	22000	7705
39.2	520	0.9	23.75	S062	112MA6	8695	3478
38.8	519	1.2	36.57	S062	100LA4	8734	3493
38.8	526	1.6	24.00	S082	112MA6	18000	6196
38.6	494	1.5	74.18	S083	90L2	18000	6237
38.6	494	2.4	74.18	S103	90L2	22000	7788
38.3	532	3.0	24.28	S102	112MA6	22000	7777
38.2	534	0.9	25.14	S062	112M6	8711	3484
38.1	529	2.8	38.30	S102	112MR4	22000	7793
37.1	544	1.1	39.38	S062	112MR4	8763	3505
37.1	544	2.8	38.30	S102	100LA4	22000	7857
37.0	551	0.9	25.14	S062	112MA6	8729	3492
36.9	553	1.5	26.05	S082	112M6	18000	6283
36.5	553	1.8	40.05	S082	112MR4	18000	6307
36.5	559	2.8	26.33	S102	112M6	22000	7892
36.1	559	1.1	39.38	S062	100LA4	8778	3511
35.7	571	1.5	26.05	S082	112MA6	18000	6337
35.5	569	1.8	40.05	S082	100LA4	18000	6355
35.3	577	2.7	26.33	S102	112MA6	22000	7966
35.2	579	1.6	27.29	S082	112M6	18000	6363
35.1	542	2.2	81.39	S103	90L2	22000	8006
35.0	544	1.4	81.71	S083	90L2	18000	6407
34.3	587	2.4	42.53	S102	112MR4	22000	8037
34.1	598	1.6	27.29	S082	112MA6	18000	6418
33.9	595	1.7	43.05	S082	112MR4	18000	6433

5.1 S MOTORREDUCTORES (50Hz)

2.20 kW

n2 [rpm]	M2 [Nm]	fs	i	Reductor	Motor	Fr2 D [N]	Fr2 C-L [N]
33.5	603	1.0	43.64	S062	112MR4	8811	3524
33.5	608	1.6	28.67	S082	112M6	18000	6449
33.4	604	2.3	42.53	S102	100LA4	22000	8103
33.2	608	2.1	44.00	S102	112MR4	22000	8118
33.0	612	1.6	43.05	S082	100LA4	18000	6481
32.7	617	3.9	44.63	S122	112MR4	30000	11200
32.5	620	1.0	43.64	S062	100LA4	8819	3528
32.4	628	1.5	28.67	S082	112MA6	18000	6505
32.4	628	1.5	29.60	S082	112M6	18000	6505
32.3	625	2.1	44.00	S102	100LA4	22000	8184
32.1	634	2.5	29.87	S102	112M6	22000	8189
31.9	598	2.0	89.77	S103	90L2	22000	8241
31.8	634	3.8	44.63	S122	100LA4	30000	11200
31.4	648	1.5	29.60	S082	112MA6	18000	6561
31.3	610	1.2	91.49	S083	90L2	18000	6609
31.1	654	2.4	29.87	S102	112MA6	22000	8265
31.0	651	2.5	47.13	S102	112MR4	22000	8282
30.2	674	1.6	31.78	S082	112M6	18000	6630
30.1	669	2.4	47.13	S102	100LA4	22000	8349
29.8	677	3.5	49.04	S122	112MR4	30000	11200
29.6	688	2.3	32.40	S102	112M6	22000	8385
29.3	696	1.5	31.78	S082	112MA6	18000	6686
29.1	694	1.4	50.25	S082	112MR4	18000	6705
29.1	694	2.0	50.25	S102	112MR4	22000	8438
29.0	697	3.4	49.04	S122	100LA4	30000	11200
28.7	710	2.2	32.40	S102	112MA6	22000	8462
28.6	667	1.8	100.15	S103	90L2	22000	8509
28.4	671	1.1	100.62	S083	90L2	18000	6781
28.3	714	1.4	50.25	S082	100LA4	18000	6755
28.3	714	2.0	50.25	S102	100LA4	22000	8506
27.5	741	1.4	34.91	S082	112M6	18000	6796
27.5	741	2.0	34.91	S102	112M6	22000	8567
27.2	743	3.5	53.75	S122	112MR4	30000	11200
27.0	753	1.4	35.50	S082	112M6	18000	6826
26.9	750	1.3	54.27	S082	112MR4	18000	6842
26.6	765	1.4	34.91	S082	112MA6	18000	6853
26.6	765	1.9	34.91	S102	112MA6	22000	8645
26.5	762	1.7	55.14	S102	112MR4	22000	8666
26.4	763	3.4	53.75	S122	100LA4	30000	11200
26.2	778	1.4	35.50	S082	112MA6	18000	6883
26.2	771	1.3	54.27	S082	100LA4	18000	6892
25.9	737	1.6	110.55	S103	90L2	22000	8756
25.8	783	1.7	55.14	S102	100LA4	22000	8735
25.4	750	3.0	112.52	S123	90L2	30000	11200
25.1	813	1.9	38.30	S102	112M6	22000	8797

5.1 S MOTORREDUCTORES (50Hz)

2.20 kW

n2 [rpm]	M2 [Nm]	fs	i	Reductor	Motor	Fr2 D [N]	Fr2 C-L [N]
24.6	821	1.9	59.40	S102	112MR4	22000	8852
24.3	839	1.9	38.30	S102	112MA6	22000	8877
24.0	850	1.2	40.05	S082	112M6	18000	7041
23.9	844	1.9	59.40	S102	100LA4	22000	8922
23.6	856	1.2	61.98	S082	112MR4	18000	7080
23.6	808	1.5	121.29	S103	90L2	22000	8992
23.4	871	3.6	41.07	S122	112M6	30000	11200
23.2	877	1.2	40.05	S082	112MA6	18000	7098
23.2	822	2.7	123.33	S123	90L2	30000	11200
22.9	880	1.1	61.98	S082	100LA4	18000	7130
22.6	902	1.6	42.53	S102	112M6	22000	9000
22.6	900	3.5	41.07	S122	112MA6	30000	11200
22.5	877	3.1	64.84	S123	112MR4	30000	11200
22.3	914	1.1	43.05	S082	112M6	18000	7171
22.2	858	1.4	128.73	S103	90L2	22000	9000
22.1	912	3.3	66.00	S122	112MR4	30000	11200
22.0	925	3.4	43.60	S122	112M6	30000	11200
22.0	867	2.6	130.04	S123	90L2	30000	11200
21.9	931	1.6	42.53	S102	112MA6	22000	9000
21.9	902	3.0	64.84	S123	100LA4	30000	11200
21.8	934	1.5	44.00	S102	112M6	22000	9000
21.6	943	1.1	43.05	S082	112MA6	18000	7200
21.6	913	1.1	67.52	S083	112MR4	18000	7200
21.5	937	1.7	67.84	S102	112MR4	22000	9000
21.5	947	2.7	44.63	S122	112M6	30000	11200
21.5	937	3.2	66.00	S122	100LA4	30000	11200
21.4	891	2.5	133.78	S123	90L2	30000	11200
21.3	955	3.3	43.60	S122	112MA6	30000	11200
21.1	964	1.4	44.00	S102	112MA6	22000	9000
21.0	939	1.1	67.52	S083	100LA4	18000	7200
20.9	964	1.7	67.84	S102	100LA4	22000	9000
20.8	978	2.6	44.63	S122	112MA6	30000	11200
20.5	961	2.8	71.07	S123	112MR4	30000	11200
20.4	1000	1.7	47.13	S102	112M6	22000	9000
20.2	941	1.3	141.24	S103	90L2	22000	9000
20.0	988	2.7	71.07	S123	100LA4	30000	11200
19.7	1003	1.0	74.18	S083	112MR4	18000	7200
19.7	1032	1.6	47.13	S102	112MA6	22000	9000
19.7	1003	1.6	74.18	S103	112MR4	22000	9000
19.6	1041	2.4	49.04	S122	112M6	30000	11200
19.1	1066	1.0	50.25	S082	112M6	18000	7200
19.1	1032	1.0	74.18	S083	100LA4	18000	7200
19.1	1066	1.4	50.25	S102	112M6	22000	9000
19.1	1032	1.6	74.18	S103	100LA4	22000	9000
19.0	1074	2.3	49.04	S122	112MA6	30000	11200

5.1 S MOTORREDUCTORES (50Hz)

2.20 kW

n2 [rpm]	M2 [Nm]	fs	i	Reductor	Motor	Fr2 D [N]	Fr2 C-L [N]
18.9	1009	2.2	151.43	S123	90L2	30000	11200
18.6	1061	2.8	78.46	S123	112MR4	30000	11200
18.5	1101	1.0	50.25	S082	112MA6	18000	7200
18.5	1101	1.3	50.25	S102	112MA6	22000	9000
18.4	1075	3.9	79.45	S143	112MR4	35000	18500
18.1	1091	2.7	78.46	S123	100LA4	30000	11200
17.9	1105	0.9	81.71	S083	112MR4	18000	7200
17.9	1101	1.5	81.39	S103	112MR4	22000	9000
17.9	1141	2.4	53.75	S122	112M6	30000	11200
17.9	1105	3.8	79.45	S143	100LA4	35000	18500
17.7	1152	0.9	54.27	S082	112M6	18000	7200
17.4	1170	1.2	55.14	S102	112M6	22000	9000
17.4	1132	1.4	81.39	S103	100LA4	22000	9000
17.3	1177	2.3	53.75	S122	112MA6	30000	11200
16.9	1208	1.1	55.14	S102	112MA6	22000	9000
16.7	1180	2.5	87.27	S123	112MR4	30000	11200
16.5	1158	1.0	173.78	S103	90L2	22000	9000
16.3	1214	1.3	89.77	S103	112MR4	22000	9000
16.3	1214	2.5	87.27	S123	100LA4	30000	11200
16.2	1260	1.3	59.40	S102	112M6	22000	9000
16.1	1183	1.9	177.53	S123	90L2	30000	11200
15.8	1248	1.3	89.77	S103	100LA4	22000	9000
15.7	1301	1.3	59.40	S102	112MA6	22000	9000
14.8	1347	2.1	64.84	S123	112M6	30000	11200
14.8	1337	3.3	98.81	S143	112MR4	35000	18500
14.8	1344	3.7	64.68	S143	112M6	35000	18500
14.7	1297	1.7	194.59	S123	90L2	30000	11200
14.6	1355	1.2	100.15	S103	112MR4	22000	9000
14.5	1401	2.2	66.00	S122	112M6	30000	11200
14.4	1387	3.6	64.68	S143	112MA6	35000	18500
14.4	1374	3.2	98.81	S143	100LA4	35000	18500
14.3	1391	2.0	64.84	S123	112MA6	30000	11200
14.2	1440	1.2	67.84	S102	112M6	22000	9000
14.2	1393	1.1	100.15	S103	100LA4	22000	9000
14.1	1446	2.2	66.00	S122	112MA6	30000	11200
13.9	1435	3.6	69.06	S143	112M6	35000	18500
13.8	1433	2.1	105.91	S123	112MR4	30000	11200
13.7	1486	1.1	67.84	S102	112MA6	22000	9000
13.5	1477	1.9	71.07	S123	112M6	30000	11200
13.5	1481	3.5	69.06	S143	112MA6	35000	18500
13.4	1473	2.0	105.91	S123	100LA4	30000	11200
13.3	1437	1.6	215.60	S123	90L2	30000	11200
13.3	1489	3.2	110.05	S143	112MR4	35000	18500
13.2	1495	1.1	110.55	S103	112MR4	22000	9000
13.1	1524	1.9	71.07	S123	112MA6	30000	11200

5.1 S MOTORREDUCTORES (50Hz)

2.20 kW

n2 [rpm]	M2 [Nm]	fs	i	Reductor	Motor	Fr2 D [N]	Fr2 C-L [N]
13.0	1522	2.0	112.52	S123	112MR4	30000	11200
12.9	1541	1.1	74.18	S103	112M6	22000	9000
12.9	1531	3.1	110.05	S143	100LA4	35000	18500
12.8	1537	1.0	110.55	S103	100LA4	22000	9000
12.6	1565	1.9	112.52	S123	100LA4	30000	11200
12.5	1591	1.1	74.18	S103	112MA6	22000	9000
12.2	1630	1.9	78.46	S123	112M6	30000	11200
12.1	1651	2.7	79.45	S143	112M6	35000	18500
12.0	1641	1.0	121.29	S103	112MR4	22000	9000
12.0	1592	1.4	238.93	S123	90L2	30000	11200
11.9	1683	1.9	78.46	S123	112MA6	30000	11200
11.8	1691	1.0	81.39	S103	112M6	22000	9000
11.8	1668	1.8	123.33	S123	112MR4	30000	11200
11.8	1670	2.8	123.44	S143	112MR4	35000	18500
11.7	1687	0.9	121.29	S103	100LA4	22000	9000
11.7	1704	2.6	79.45	S143	112MA6	35000	18500
11.5	1715	1.7	123.33	S123	100LA4	30000	11200
11.5	1717	2.8	123.44	S143	100LA4	35000	18500
11.4	1746	1.0	81.39	S103	112MA6	22000	9000
11.3	1741	0.9	128.73	S103	112MR4	22000	9000
11.2	1765	0.9	128.73	S103	100LA4	22000	9000
11.2	1759	1.7	130.04	S123	112MR4	30000	11200
11.2	1703	1.3	255.54	S123	90L2	30000	11200
11.0	1813	1.7	87.27	S123	112M6	30000	11200
10.9	1809	1.7	130.04	S123	100LA4	30000	11200
10.9	1810	1.7	133.78	S123	112MR4	30000	11200
10.7	1865	0.9	89.77	S103	112M6	22000	9000
10.7	1872	1.7	87.27	S123	112MA6	30000	11200
10.6	1861	1.6	133.78	S123	100LA4	30000	11200
10.5	1889	2.6	139.64	S143	112MR4	35000	18500
10.2	1866	1.2	280.10	S123	90L2	30000	11200
10.2	1942	2.5	139.64	S143	100LA4	35000	18500
9.8	2017	2.4	149.10	S143	112MR4	35000	18500
9.7	2053	2.3	98.81	S143	112M6	35000	18500
9.6	2048	1.5	151.43	S123	112MR4	30000	11200
9.5	2007	1.1	301.16	S123	90L2	30000	11200
9.5	2074	2.3	149.10	S143	100LA4	35000	18500
9.4	2106	1.4	151.43	S123	100LA4	30000	11200
9.4	2119	2.2	98.81	S143	112MA6	35000	18500
9.3	2130	1.8	157.49	S143	112MR4	35000	18500
9.1	2201	1.4	105.91	S123	112M6	30000	11200
9.0	2190	1.7	157.49	S143	100LA4	35000	18500
8.8	2272	1.4	105.91	S123	112MA6	30000	11200
8.7	2287	2.2	110.05	S143	112M6	35000	18500
8.5	2338	1.3	112.52	S123	112M6	30000	11200

5.1 S MOTORREDUCTORES (50Hz)

2.20 kW

n2 [rpm]	M2 [Nm]	fs	i	Reductor	Motor	Fr2 D [N]	Fr2 C-L [N]
8.5	2360	2.1	110.05	S143	112MA6	35000	18500
8.5	2321	2.0	171.55	S143	112MR4	35000	18500
8.3	2413	1.3	112.52	S123	112MA6	30000	11200
8.3	2386	2.0	171.55	S143	100LA4	35000	18500
8.3	2373	1.8	175.41	S143	112MR4	35000	18500
8.2	2401	1.2	177.53	S123	112MR4	30000	11200
8.1	2440	1.7	175.41	S143	100LA4	35000	18500
8.0	2469	1.2	177.53	S123	100LA4	30000	11200
7.8	2562	1.2	123.33	S123	112M6	30000	11200
7.8	2565	1.9	123.44	S143	112M6	35000	18500
7.5	2645	1.2	123.33	S123	112MA6	30000	11200
7.5	2632	1.1	194.59	S123	112MR4	30000	11200
7.5	2648	1.9	123.44	S143	112MA6	35000	18500
7.4	2702	1.2	130.04	S123	112M6	30000	11200
7.4	2661	1.8	196.74	S143	112MR4	35000	18500
7.3	2706	1.1	194.59	S123	100LA4	30000	11200
7.2	2789	1.1	130.04	S123	112MA6	30000	11200
7.2	2780	1.1	133.78	S123	112M6	30000	11200
7.2	2736	1.7	196.74	S143	100LA4	35000	18500
7.0	2869	1.1	133.78	S123	112MA6	30000	11200
6.9	2902	1.8	139.64	S143	112M6	35000	18500
6.8	2916	1.0	215.60	S123	112MR4	30000	11200
6.7	2995	1.7	139.64	S143	112MA6	35000	18500
6.6	2999	1.0	215.60	S123	100LA4	30000	11200
6.6	3011	1.6	222.57	S143	112MR4	35000	18500
6.4	3098	1.6	149.10	S143	112M6	35000	18500
6.4	3095	1.5	222.57	S143	100LA4	35000	18500
6.3	3146	1.0	151.43	S123	112M6	30000	11200
6.2	3198	1.6	149.10	S143	112MA6	35000	18500
6.1	3248	1.0	151.43	S123	112MA6	30000	11200
6.1	3232	0.9	238.93	S123	112MR4	30000	11200
6.1	3272	1.2	157.49	S143	112M6	35000	18500
6.1	3214	1.5	237.63	S143	112MR4	35000	18500
6.0	3305	1.5	237.63	S143	100LA4	35000	18500
5.9	3323	0.9	238.93	S123	100LA4	30000	11200
5.9	3378	1.2	157.49	S143	112MA6	35000	18500
5.6	3564	1.4	171.55	S143	112M6	35000	18500
5.5	3645	1.2	175.41	S143	112M6	35000	18500
5.4	3679	1.3	171.55	S143	112MA6	35000	18500
5.3	3762	1.2	175.41	S143	112MA6	35000	18500
5.3	3698	1.3	273.41	S143	112MR4	35000	18500
5.2	3803	1.3	273.41	S143	100LA4	35000	18500
4.9	4088	1.2	196.74	S143	112M6	35000	18500
4.7	4220	1.2	196.74	S143	112MA6	35000	18500
4.3	4625	1.1	222.57	S143	112M6	35000	18500

5.1 S MOTORREDUCTORES (50Hz)

2.20 kW

n2 [rpm]	M2 [Nm]	fs	i	Reductor	Motor	Fr2 D [N]	Fr2 C-L [N]
4.2	4774	1.0	222.57	S143	112MA6	35000	18500
4.0	4938	1.0	237.63	S143	112M6	35000	18500
3.9	5097	1.0	237.63	S143	112MA6	35000	18500

3.00 kW

n2 [rpm]	M2 [Nm]	fs	i	Reductor	Motor	Fr2 D [N]	Fr2 C-L [N]
362.5	73	3.4	8.00	S062	100L2	5290	2116
358.8	74	3.3	8.00	S062	100LA2	5305	2122
336.2	79	1.6	8.63	S052	100L2	2972	2972
332.8	80	1.6	8.63	S052	100LA2	2979	2979
325.1	82	3.0	8.92	S062	100L2	5447	2179
321.7	83	3.0	8.92	S062	100LA2	5462	2185
303.8	87	3.1	9.55	S062	100L2	5546	2218
300.7	88	3.1	9.55	S062	100LA2	5561	2224
272.4	97	2.8	10.65	S062	100L2	5705	2282
269.6	98	2.7	10.65	S062	100LA2	5721	2288
260.3	102	1.4	11.14	S052	100L2	3141	3141
257.6	103	1.4	11.14	S052	100LA2	3148	3148
247.7	107	2.7	11.71	S062	100L2	5846	2338
245.1	108	2.7	11.71	S062	100LA2	5861	2344
241.7	110	1.4	12.00	S052	100L2	3188	3188
239.2	111	1.4	12.00	S052	100LA2	3194	3194
222.1	120	2.6	13.06	S062	100L2	6006	2403
219.8	121	2.6	13.06	S062	100LA2	6022	2409
217.1	122	2.6	13.36	S062	100L2	6040	2416
214.9	124	2.6	13.36	S062	100LA2	6055	2422
212.4	125	1.3	13.66	S052	100L2	3267	3267
210.2	126	1.2	13.66	S052	100LA2	3273	3273
197.6	139	4.0	7.34	S082	112MS4	13221	3777
193.5	142	3.9	7.34	S082	100LB4	13306	3802
189.9	140	1.3	15.27	S052	100L2	3331	3331
187.9	141	1.3	15.27	S052	100LA2	3337	3337
182.5	145	4.0	15.73	S082	100LA2	13563	3875
182.0	146	2.3	15.94	S062	100L2	6299	2520
181.3	152	2.2	8.00	S062	112MS4	6271	2508
180.1	147	2.3	15.94	S062	100LA2	6314	2526
179.8	153	3.9	8.06	S082	112MS4	13607	3888
179.4	148	2.3	16.16	S062	100L2	6320	2528
178.1	149	1.2	16.29	S052	100L2	3366	3366
177.6	149	2.3	16.16	S062	100LA2	6335	2534
177.5	155	2.1	8.00	S062	100LB4	6301	2520
176.2	151	1.2	16.29	S052	100LA2	3371	3371
176.1	156	3.8	8.06	S082	100LB4	13694	3912

5.1 S MOTORREDUCTORES (50Hz)

3.00 kW

n2 [rpm]	M2 [Nm]	fs	i	Reductor	Motor	Fr2 D [N]	Fr2 C-L [N]
168.1	164	1.0	8.63	S052	112MS4	3362	3362
167.7	158	3.6	17.29	S082	100L2	13919	3977
165.9	160	3.6	17.29	S082	100LA2	13963	3989
164.6	167	1.0	8.63	S052	100LB4	3372	3372
162.5	169	2.0	8.92	S062	112MS4	6425	2570
159.2	173	1.9	8.92	S062	100LB4	6455	2582
155.6	171	1.1	18.63	S052	100L2	3433	3433
154.0	172	1.0	18.63	S052	100LA2	3438	3438
152.4	174	3.3	19.03	S082	100L2	14329	4094
151.9	181	2.0	9.55	S062	112MS4	6519	2608
150.8	176	3.3	19.03	S082	100LA2	14374	4107
150.4	177	1.9	19.29	S062	100L2	6574	2630
148.8	185	1.9	9.55	S062	100LB4	6548	2619
148.8	178	1.9	19.29	S062	100LA2	6589	2635
148.3	179	1.9	19.55	S062	100L2	6593	2637
146.8	181	1.9	19.55	S062	100LA2	6608	2643
145.8	189	3.4	9.94	S082	112MS4	14500	4143
144.0	184	3.1	20.14	S082	100L2	14577	4165
142.8	193	3.4	9.94	S082	100LB4	14592	4169
142.5	186	3.1	20.14	S082	100LA2	14623	4178
137.9	193	1.0	21.04	S052	100L2	3486	3486
136.4	195	1.0	21.04	S052	100LA2	3490	3490
136.2	202	1.8	10.65	S062	112MS4	6668	2667
133.4	206	1.7	10.65	S062	100LB4	6696	2678
132.2	210	2.7	7.34	S082	132S6	14928	4265
131.1	202	3.0	22.13	S082	100L2	14996	4285
130.8	212	2.7	7.34	S082	132SA6	14974	4278
129.7	205	2.9	22.13	S082	100LA2	15043	4298
126.7	219	2.6	7.34	S082	112MB6	15117	4319
125.1	212	1.7	23.18	S062	100L2	6829	2732
124.9	220	3.2	11.61	S082	112MS4	15188	4339
123.8	222	1.8	11.71	S062	112MS4	6794	2718
123.8	214	1.6	23.18	S062	100LA2	6843	2737
122.4	225	3.1	11.61	S082	100LB4	15283	4367
122.1	217	1.6	23.75	S062	100L2	6862	2745
121.3	227	1.7	11.71	S062	100LB4	6821	2728
120.8	220	1.6	23.75	S062	100LA2	6876	2750
120.8	220	2.7	24.00	S082	100L2	15366	4390
120.3	231	2.7	8.06	S082	132S6	15352	4386
120.3	231	3.9	8.06	S102	132S6	19006	5430
119.6	222	2.7	24.00	S082	100LA2	15414	4404
119.1	233	2.7	8.06	S082	132SA6	15399	4400
119.1	233	3.8	8.06	S102	132SA6	19067	5448
116.3	239	1.5	8.00	S062	112MB6	6860	2744
115.3	230	1.6	25.14	S062	100L2	6938	2775

5.1 S MOTORREDUCTORES (50Hz)

3.00 kW

n2 [rpm]	M2 [Nm]	fs	i	Reductor	Motor	Fr2 D [N]	Fr2 C-L [N]
115.3	241	2.6	8.06	S082	112MB6	15545	4441
115.3	241	3.7	8.06	S102	112MB6	19255	5501
114.1	233	1.5	25.14	S062	100LA2	6951	2781
113.7	242	3.1	12.75	S082	112MS4	15618	4462
111.4	247	3.0	12.75	S082	100LB4	15715	4490
111.3	238	2.5	26.05	S082	100L2	15745	4499
111.0	248	1.7	13.06	S062	112MS4	6932	2773
110.2	241	2.5	26.05	S082	100LA2	15794	4512
109.6	253	3.7	8.85	S102	132S6	19557	5588
108.7	253	1.7	13.06	S062	100LB4	6958	2783
108.6	253	1.7	13.36	S062	112MS4	6960	2784
108.5	256	3.7	8.85	S102	132SA6	19620	5606
106.3	259	1.6	13.36	S062	100LB4	6985	2794
106.3	250	2.7	27.29	S082	100L2	15963	4561
105.2	252	2.7	27.29	S082	100LA2	16012	4575
105.1	264	3.6	8.85	S102	112MB6	19812	5661
104.9	253	1.4	27.66	S062	100L2	7060	2824
104.2	266	1.3	8.92	S062	112MB6	6992	2797
103.8	256	1.4	27.66	S062	100LA2	7073	2829
103.2	266	2.9	14.04	S082	112MS4	16070	4591
101.1	272	2.8	14.04	S082	100LB4	16168	4620
101.1	262	2.6	28.67	S082	100L2	16198	4628
100.1	265	2.5	28.67	S082	100LA2	16248	4642
98.0	271	2.5	29.60	S082	100L2	16350	4672
97.5	285	2.4	9.94	S082	132S6	16330	4666
97.4	285	1.3	9.55	S062	112MB6	7070	2828
97.0	274	2.5	29.60	S082	100LA2	16400	4686
96.7	275	1.4	30.00	S062	100L2	7160	2864
96.5	288	2.4	9.94	S082	132SA6	16379	4680
95.7	277	1.4	30.00	S062	100LA2	7172	2869
94.0	293	2.6	15.43	S082	112MS4	16517	4719
93.5	297	2.3	9.94	S082	112MB6	16531	4723
92.2	298	2.6	15.73	S082	112MS4	16609	4745
92.0	299	2.6	15.43	S082	100LB4	16618	4748
91.3	291	2.6	31.78	S082	100L2	16693	4770
91.0	302	1.5	15.94	S062	112MS4	7164	2866
90.3	294	2.6	31.78	S082	100LA2	16744	4784
90.3	305	2.5	15.73	S082	100LB4	16710	4774
89.7	307	1.5	16.16	S062	112MS4	7179	2872
89.5	297	3.8	32.40	S102	100L2	20846	5956
89.1	309	1.5	15.94	S062	100LB4	7186	2875
89.1	312	3.2	10.88	S102	132S6	20837	5954
88.6	300	3.8	32.40	S102	100LA2	20912	5975
88.2	315	3.2	10.88	S102	132SA6	20903	5972
87.9	313	1.4	16.16	S062	100LB4	7201	2880

5.1 S MOTORREDUCTORES (50Hz)

3.00 kW

n2 [rpm]	M2 [Nm]	fs	i	Reductor	Motor	Fr2 D [N]	Fr2 C-L [N]
87.4	318	1.2	10.65	S062	112MB6	7187	2875
85.5	310	1.3	33.93	S062	100L2	7301	2920
85.4	325	3.1	10.88	S102	112MB6	21106	6030
84.6	314	1.3	33.93	S062	100LA2	7312	2925
84.2	326	4.0	17.21	S102	112MS4	21205	6059
83.8	328	2.3	17.29	S082	112MS4	17072	4878
83.6	332	2.2	11.61	S082	132S6	17077	4879
83.1	319	2.3	34.91	S082	100L2	17155	4902
83.1	319	3.3	34.91	S102	100L2	21325	6093
82.7	336	2.2	11.61	S082	132SA6	17128	4894
82.5	333	3.9	17.21	S102	100LB4	21340	6097
82.2	323	2.3	34.91	S082	100LA2	17207	4916
82.2	323	3.3	34.91	S102	100LA2	21392	6112
82.1	335	2.3	17.29	S082	100LB4	17175	4907
81.7	325	2.3	35.50	S082	100L2	17239	4925
80.8	328	2.3	35.50	S082	100LA2	17291	4940
80.1	347	2.1	11.61	S082	112MB6	17284	4938
79.4	350	1.2	11.71	S062	112MB6	7280	2912
79.3	335	1.3	36.57	S062	100L2	7380	2952
78.5	338	1.3	36.57	S062	100LA2	7390	2956
76.3	360	3.9	19.00	S102	112MS4	21848	6242
76.2	361	2.1	19.03	S082	112MS4	17545	5013
76.1	365	2.2	12.75	S082	132S6	17542	5012
76.1	365	2.9	12.75	S102	132S6	21859	6245
75.7	351	3.2	38.30	S102	100L2	21933	6267
75.3	369	2.1	12.75	S082	132SA6	17593	5027
75.3	369	2.8	12.75	S102	132SA6	21927	6265
75.2	366	1.2	19.29	S062	112MS4	7351	2940
74.9	354	3.2	38.30	S102	100LA2	22000	6286
74.7	368	3.8	19.00	S102	100LB4	21986	6282
74.6	369	2.1	19.03	S082	100LB4	17650	5043
74.2	371	1.2	19.55	S062	112MS4	7363	2945
73.7	360	1.2	39.38	S062	100L2	7452	2981
73.6	374	1.2	19.29	S062	100LB4	7369	2948
72.9	364	1.2	39.38	S062	100LA2	7461	2985
72.9	381	2.1	12.75	S082	112MB6	17752	5072
72.9	381	2.8	12.75	S102	112MB6	22000	6325
72.6	379	1.2	19.55	S062	100LB4	7381	2952
72.4	367	2.0	40.05	S082	100L2	17845	5099
72.0	382	2.0	20.14	S082	112MS4	17830	5094
71.7	370	2.0	40.05	S082	100LA2	17898	5114
71.2	390	1.1	13.06	S062	112MB6	7372	2949
70.5	390	2.0	20.14	S082	100LB4	17936	5125
69.6	399	1.1	13.36	S062	112MB6	7389	2956
69.6	395	3.5	20.83	S102	112MS4	22000	6417

5.1 S MOTORREDUCTORES (50Hz)

3.00 kW

n2 [rpm]	M2 [Nm]	fs	i	Reductor	Motor	Fr2 D [N]	Fr2 C-L [N]
69.3	401	3.1	13.99	S102	132S6	22000	6422
69.1	402	2.0	14.04	S082	132S6	18000	5151
68.6	405	3.1	13.99	S102	132SA6	22000	6442
68.4	406	2.0	14.04	S082	132SA6	18000	5166
68.2	389	2.7	42.53	S102	100L2	22000	6467
68.2	403	3.5	20.83	S102	100LB4	22000	6457
67.5	393	2.7	42.53	S102	100LA2	22000	6487
67.4	394	1.9	43.05	S082	100L2	18000	5204
66.7	398	1.9	43.05	S082	100LA2	18000	5220
66.5	399	1.1	43.64	S062	100L2	7540	3016
66.5	418	3.0	13.99	S102	112MB6	22000	6503
66.2	419	1.9	14.04	S082	112MB6	18000	5212
65.9	403	2.4	44.00	S102	100L2	22000	6534
65.8	404	1.1	43.64	S062	100LA2	7549	3019
65.5	420	1.9	22.13	S082	112MS4	18000	5231
65.5	420	3.3	22.13	S102	112MS4	22000	6534
65.2	407	2.4	44.00	S102	100LA2	22000	6554
64.2	429	1.9	22.13	S082	100LB4	18000	5261
64.2	429	3.3	22.13	S102	100LB4	22000	6575
62.9	442	1.8	15.43	S082	132S6	18000	5288
62.9	442	3.0	15.43	S102	132S6	22000	6612
62.6	440	1.1	23.18	S062	112MS4	7488	2995
62.2	446	1.8	15.43	S082	132SA6	18000	5303
62.2	446	2.9	15.43	S102	132SA6	22000	6632
61.7	450	1.8	15.73	S082	132S6	18000	5316
61.5	431	2.8	47.13	S102	100L2	22000	6669
61.3	449	1.0	23.18	S062	100LB4	7500	3000
61.1	450	1.0	23.75	S062	112MS4	7502	3001
61.0	455	1.8	15.73	S082	132SA6	18000	5331
60.9	436	2.8	47.13	S102	100LA2	22000	6690
60.4	455	1.8	24.00	S082	112MS4	18000	5351
60.3	461	1.8	15.43	S082	112MB6	18000	5350
60.3	461	2.8	15.43	S102	112MB6	22000	6695
60.0	442	1.0	48.30	S062	100L2	7613	3045
59.8	460	1.0	23.75	S062	100LB4	7514	3005
59.7	460	3.3	24.28	S102	112MS4	22000	6716
59.4	447	1.0	48.30	S062	100LA2	7620	3048
59.2	465	1.7	24.00	S082	100LB4	18000	5381
59.1	470	1.7	15.73	S082	112MB6	18000	5378
58.5	470	3.2	24.28	S102	100LB4	22000	6758
58.5	454	4.0	49.04	S122	100LA2	30000	9674
58.4	476	1.0	15.94	S062	112MB6	7496	2998
57.7	477	1.0	25.14	S062	112MS4	7531	3013
57.7	460	1.6	50.25	S082	100L2	18000	5434
57.7	460	2.3	50.25	S102	100L2	22000	6797

5.1 S MOTORREDUCTORES (50Hz)

3.00 kW

n2 [rpm]	M2 [Nm]	fs	i	Reductor	Motor	Fr2 D [N]	Fr2 C-L [N]
57.5	483	1.0	16.16	S062	112MB6	7502	3001
57.1	465	1.6	50.25	S082	100LA2	18000	5450
57.1	465	2.3	50.25	S102	100LA2	22000	6818
56.5	487	1.0	25.14	S062	100LB4	7541	3016
56.4	493	2.8	17.21	S102	132S6	22000	6829
56.1	495	1.6	17.29	S082	132S6	18000	5456
55.8	498	2.7	17.21	S102	132SA6	22000	6850
55.7	494	1.6	26.05	S082	112MS4	18000	5472
55.5	500	1.6	17.29	S082	132SA6	18000	5472
55.1	499	3.0	26.33	S102	112MS4	22000	6879
54.5	505	1.6	26.05	S082	100LB4	18000	5504
54.0	514	2.7	17.21	S102	112MB6	22000	6914
54.0	492	4.0	53.75	S122	100L2	30000	9909
53.9	510	2.9	26.33	S102	100LB4	22000	6922
53.8	517	1.6	17.29	S082	112MB6	18000	5519
53.4	497	1.5	54.27	S082	100L2	18000	5550
53.4	497	3.9	53.75	S122	100LA2	30000	9940
53.1	518	1.7	27.29	S082	112MS4	18000	5542
52.9	502	1.5	54.27	S082	100LA2	18000	5566
52.6	505	1.9	55.14	S102	100L2	22000	6986
52.4	525	0.9	27.66	S062	112MS4	7566	3027
52.1	510	1.9	55.14	S102	100LA2	22000	7007
52.0	529	1.7	27.29	S082	100LB4	18000	5573
51.7	532	0.9	27.66	S062	100LB4	7570	3028
51.1	544	2.7	19.00	S102	132S6	22000	7029
51.0	545	1.5	19.03	S082	132S6	18000	5600
50.6	544	1.7	28.67	S082	112MS4	18000	5617
50.5	551	1.5	19.03	S082	132SA6	18000	5615
50.5	550	2.7	19.00	S102	132SA6	22000	7051
49.5	555	1.6	28.67	S082	100LB4	18000	5648
49.0	561	1.6	29.60	S082	112MS4	18000	5665
48.9	568	1.4	19.03	S082	112MB6	18000	5663
48.9	568	2.6	19.00	S102	112MB6	22000	7116
48.8	544	2.2	59.40	S102	100L2	22000	7140
48.5	567	2.6	29.87	S102	112MS4	22000	7137
48.3	549	2.2	59.40	S102	100LA2	22000	7162
48.2	577	1.4	20.14	S082	132S6	18000	5685
48.0	573	1.6	29.60	S082	100LB4	18000	5697
47.7	583	1.4	20.14	S082	132SA6	18000	5701
47.5	579	2.6	29.87	S102	100LB4	22000	7181
46.8	567	1.3	61.98	S082	100L2	18000	5754
46.6	596	2.5	20.83	S102	132S6	22000	7219
46.3	573	1.3	61.98	S082	100LA2	18000	5770
46.2	602	1.3	20.14	S082	112MB6	18000	5749
46.1	603	2.4	20.83	S102	132SA6	22000	7241

5.1 S MOTORREDUCTORES (50Hz)

3.00 kW

n2 [rpm]	M2 [Nm]	fs	i	Reductor	Motor	Fr2 D [N]	Fr2 C-L [N]
45.6	603	1.7	31.78	S082	112MS4	18000	5773
44.8	615	2.4	32.40	S102	112MS4	22000	7307
44.7	615	1.6	31.78	S082	100LB4	18000	5805
44.7	622	2.4	20.83	S102	112MB6	22000	7308
44.7	581	3.5	64.84	S123	100L2	30000	10480
44.3	587	3.4	64.84	S123	100LA2	30000	10511
43.9	604	3.7	66.00	S122	100L2	30000	10520
43.8	634	1.3	22.13	S082	132S6	18000	5828
43.8	634	2.3	22.13	S102	132S6	22000	7346
43.8	628	2.4	32.40	S102	100LB4	22000	7352
43.6	637	4.0	22.24	S142	132S6	35000	18500
43.5	610	3.7	66.00	S122	100LA2	30000	10551
43.4	640	1.3	22.13	S082	132SA6	18000	5844
43.4	640	2.3	22.13	S102	132SA6	22000	7368
43.2	644	3.9	22.24	S142	132SA6	35000	18500
42.9	605	1.2	67.52	S083	100L2	18000	5899
42.7	621	1.9	67.84	S102	100L2	22000	7421
42.5	611	1.2	67.52	S083	100LA2	18000	5915
42.3	627	1.9	67.84	S102	100LA2	22000	7443
42.0	661	1.3	22.13	S082	112MB6	18000	5892
42.0	661	2.2	22.13	S102	112MB6	22000	7435
41.5	662	1.5	34.91	S082	112MS4	18000	5917
41.5	662	2.1	34.91	S102	112MS4	22000	7466
40.8	673	1.5	35.50	S082	112MS4	18000	5943
40.8	637	3.2	71.07	S123	100L2	30000	10761
40.7	676	1.5	34.91	S082	100LB4	18000	5949
40.7	676	2.1	34.91	S102	100LB4	22000	7510
40.4	687	1.2	24.00	S082	132S6	18000	5952
40.4	644	3.1	71.07	S123	100LA2	30000	10793
40.0	694	1.2	24.00	S082	132SA6	18000	5968
40.0	688	1.5	35.50	S082	100LB4	18000	5975
40.0	695	2.3	24.28	S102	132S6	22000	7543
39.5	702	2.2	24.28	S102	132SA6	22000	7566
39.1	665	1.1	74.18	S083	100L2	18000	6046
39.1	665	1.8	74.18	S103	100L2	22000	7624
38.8	717	1.2	24.00	S082	112MB6	18000	6017
38.7	672	1.1	74.18	S083	100LA2	18000	6063
38.7	672	1.8	74.18	S103	100LA2	22000	7647
38.4	723	3.1	25.26	S142	132S6	35000	18500
38.3	725	2.2	24.28	S102	112MB6	22000	7634
38.0	731	3.0	25.26	S142	132SA6	35000	18500
37.9	727	2.1	38.30	S102	112MS4	22000	7665
37.2	746	1.1	26.05	S082	132S6	18000	6078
37.1	742	2.0	38.30	S102	100LB4	22000	7711
37.0	703	3.2	78.46	S123	100L2	30000	11069

5.1 S MOTORREDUCTORES (50Hz)

3.00 kW

n2 [rpm]	M2 [Nm]	fs	i	Reductor	Motor	Fr2 D [N]	Fr2 C-L [N]
36.9	754	1.1	26.05	S082	132SA6	18000	6094
36.8	754	2.1	26.33	S102	132S6	22000	7719
36.6	710	3.2	78.46	S123	100LA2	30000	11102
36.5	762	2.1	26.33	S102	132SA6	22000	7742
36.2	760	1.3	40.05	S082	112MS4	18000	6129
35.7	778	1.1	26.05	S082	112MB6	18000	6143
35.6	729	1.6	81.39	S103	100L2	22000	7829
35.5	781	1.2	27.29	S082	132S6	18000	6150
35.5	776	1.3	40.05	S082	100LB4	18000	6161
35.5	732	1.0	81.71	S083	100L2	18000	6199
35.3	787	2.0	26.33	S102	112MB6	22000	7811
35.3	737	1.6	81.39	S103	100LA2	22000	7852
35.3	779	3.9	41.07	S122	112MS4	30000	11167
35.2	790	1.2	27.29	S082	132SA6	18000	6165
35.1	740	1.0	81.71	S083	100LA2	18000	6216
34.6	795	3.8	41.07	S122	100LB4	30000	11200
34.2	811	3.1	28.33	S142	132S6	35000	18500
34.1	815	1.2	27.29	S082	112MB6	18000	6214
34.1	807	1.7	42.53	S102	112MS4	22000	7894
33.9	819	3.8	28.60	S122	132S6	30000	11200
33.9	820	3.0	28.33	S142	132SA6	35000	18500
33.8	821	1.2	28.67	S082	132S6	18000	6226
33.7	817	1.2	43.05	S082	112MS4	18000	6240
33.6	828	3.8	28.60	S122	132SA6	30000	11200
33.5	830	1.1	28.67	S082	132SA6	18000	6242
33.4	824	1.7	42.53	S102	100LB4	22000	7940
33.3	827	3.6	43.60	S122	112MS4	30000	11200
33.2	782	2.9	87.27	S123	100L2	30000	11200
33.0	834	1.2	43.05	S082	100LB4	18000	6273
33.0	835	1.6	44.00	S102	112MS4	22000	7969
32.9	790	2.8	87.27	S123	100LA2	30000	11200
32.8	848	1.1	29.60	S082	132S6	18000	6275
32.6	844	3.6	43.60	S122	100LB4	30000	11200
32.5	855	1.8	29.87	S102	132S6	22000	7995
32.5	854	3.7	28.60	S122	112MB6	30000	11200
32.5	847	2.8	44.63	S122	112MS4	30000	11200
32.4	856	1.1	28.67	S082	112MB6	18000	6290
32.4	857	1.1	29.60	S082	132SA6	18000	6291
32.3	852	1.5	44.00	S102	100LB4	22000	8016
32.3	804	1.5	89.77	S103	100L2	22000	8048
32.1	864	1.8	29.87	S102	132SA6	22000	8018
32.0	813	1.5	89.77	S103	100LA2	22000	8072
31.8	874	3.6	30.51	S122	132S6	30000	11200
31.8	864	2.8	44.63	S122	100LB4	30000	11200
31.5	883	3.6	30.51	S122	132SA6	30000	11200

5.1 S MOTORREDUCTORES (50Hz)

3.00 kW

n2 [rpm]	M2 [Nm]	fs	i	Reductor	Motor	Fr2 D [N]	Fr2 C-L [N]
31.4	884	1.1	29.60	S082	112MB6	18000	6339
31.1	892	1.8	29.87	S102	112MB6	22000	8089
30.8	894	1.8	47.13	S102	112MS4	22000	8122
30.5	910	1.2	31.78	S082	132S6	18000	6384
30.5	911	3.5	30.51	S122	112MB6	30000	11200
30.3	918	3.1	32.05	S142	132S6	35000	18500
30.2	919	1.1	31.78	S082	132SA6	18000	6399
30.1	913	1.8	47.13	S102	100LB4	22000	8169
30.0	927	3.0	32.05	S142	132SA6	35000	18500
29.9	928	1.7	32.40	S102	132S6	22000	8176
29.6	938	1.7	32.40	S102	132SA6	22000	8200
29.6	938	3.4	32.76	S122	132S6	30000	11200
29.6	930	2.6	49.04	S122	112MS4	30000	11200
29.3	949	1.1	31.78	S082	112MB6	18000	6448
29.3	948	3.3	32.76	S122	132SA6	30000	11200
29.0	897	1.3	100.15	S103	100L2	22000	8297
29.0	958	3.3	33.44	S122	132S6	30000	11200
29.0	950	2.5	49.04	S122	100LB4	30000	11200
28.9	953	1.0	50.25	S082	112MS4	18000	6479
28.9	953	1.5	50.25	S102	112MS4	22000	8266
28.7	968	1.6	32.40	S102	112MB6	22000	8271
28.7	907	1.3	100.15	S103	100LA2	22000	8321
28.7	968	3.3	33.44	S122	132SA6	30000	11200
28.4	978	3.2	32.76	S122	112MB6	30000	11200
28.3	973	1.0	50.25	S082	100LB4	18000	6511
28.3	973	1.4	50.25	S102	100LB4	22000	8313
28.3	980	3.1	34.22	S142	132S6	35000	18500
28.1	990	3.0	34.22	S142	132SA6	35000	18500
27.8	1000	1.1	34.91	S082	132S6	18000	6527
27.8	1000	1.5	34.91	S102	132S6	22000	8344
27.8	999	3.2	33.44	S122	112MB6	30000	11200
27.6	1008	3.1	35.20	S122	132S6	30000	11200
27.5	1010	1.0	34.91	S082	132SA6	18000	6543
27.5	1010	1.5	34.91	S102	132SA6	22000	8367
27.4	949	2.4	105.91	S123	100L2	30000	11200
27.3	1019	3.1	35.20	S122	132SA6	30000	11200
27.1	959	2.3	105.91	S123	100LA2	30000	11200
27.0	1020	2.6	53.75	S122	112MS4	30000	11200
26.7	1029	1.0	54.27	S082	112MS4	18000	6597
26.6	1043	1.0	34.91	S082	112MB6	18000	6592
26.6	1043	1.4	34.91	S102	112MB6	22000	8439
26.4	1051	3.0	35.20	S122	112MB6	30000	11200
26.4	1041	2.5	53.75	S122	100LB4	30000	11200
26.3	1046	1.2	55.14	S102	112MS4	22000	8476
26.2	1060	1.0	35.50	S082	112MB6	18000	6617

5.1 S MOTORREDUCTORES (50Hz)

3.00 kW

n2 [rpm]	M2 [Nm]	fs	i	Reductor	Motor	Fr2 D [N]	Fr2 C-L [N]
26.2	1051	1.0	54.27	S082	100LB4	18000	6629
26.2	991	1.2	110.55	S103	100L2	22000	8525
26.0	1001	1.2	110.55	S103	100LA2	22000	8549
25.8	1068	1.2	55.14	S102	100LB4	22000	8524
25.8	1008	2.2	112.52	S123	100L2	30000	11200
25.5	1019	2.2	112.52	S123	100LA2	30000	11200
25.3	1097	1.4	38.30	S102	132S6	22000	8554
25.1	1108	1.4	38.30	S102	132SA6	22000	8578
24.4	1127	1.4	59.40	S102	112MS4	22000	8647
24.3	1144	1.4	38.30	S102	112MB6	22000	8651
23.9	1151	1.4	59.40	S102	100LB4	22000	8695
23.9	1087	1.1	121.29	S103	100L2	22000	8741
23.7	1098	1.1	121.29	S103	100LA2	22000	8766
23.6	1176	2.7	41.07	S122	132S6	30000	11200
23.5	1105	2.0	123.33	S123	100L2	30000	11200
23.4	1188	2.7	41.07	S122	132SA6	30000	11200
23.3	1117	2.0	123.33	S123	100LA2	30000	11200
22.8	1218	1.2	42.53	S102	132S6	22000	8794
22.6	1231	1.2	42.53	S102	132SA6	22000	8817
22.6	1227	2.6	41.07	S122	112MB6	30000	11200
22.5	1154	1.0	128.73	S103	100L2	22000	8881
22.4	1204	2.2	64.84	S123	112MS4	30000	11200
22.4	1201	4.0	64.68	S143	112MS4	35000	18500
22.3	1166	1.0	128.73	S103	100LA2	22000	8906
22.3	1165	1.9	130.04	S123	100L2	30000	11200
22.2	1249	2.5	43.60	S122	132S6	30000	11200
22.1	1178	1.9	130.04	S123	100LA2	30000	11200
22.0	1262	2.5	43.60	S122	132SA6	30000	11200
22.0	1252	2.4	66.00	S122	112MS4	30000	11200
22.0	1227	3.9	64.68	S143	100LB4	35000	18500
21.9	1270	1.2	42.53	S102	112MB6	22000	8891
21.9	1230	2.2	64.84	S123	100LB4	30000	11200
21.7	1278	2.0	44.63	S122	132S6	30000	11200
21.7	1199	1.9	133.78	S123	100L2	30000	11200
21.5	1291	2.0	44.63	S122	132SA6	30000	11200
21.5	1278	2.3	66.00	S122	100LB4	30000	11200
21.5	1211	1.9	133.78	S123	100LA2	30000	11200
21.4	1287	1.2	67.84	S102	112MS4	22000	8953
21.3	1302	2.4	43.60	S122	112MB6	30000	11200
21.2	1283	3.3	45.77	S143	132S6	35000	18500
21.1	1314	1.0	44.00	S102	112MB6	22000	8969
21.0	1297	3.2	45.77	S143	132SA6	35000	18500
21.0	1283	3.8	69.06	S143	112MS4	35000	18500
20.9	1314	1.2	67.84	S102	100LB4	22000	9000
20.8	1333	1.9	44.63	S122	112MB6	30000	11200

5.1 S MOTORREDUCTORES (50Hz)

3.00 kW

n2 [rpm]	M2 [Nm]	fs	i	Reductor	Motor	Fr2 D [N]	Fr2 C-L [N]
20.6	1350	1.2	47.13	S102	132S6	22000	9000
20.6	1310	3.7	69.06	S143	100LB4	35000	18500
20.4	1364	1.2	47.13	S102	132SA6	22000	9000
20.4	1320	2.0	71.07	S123	112MS4	30000	11200
20.3	1339	3.1	45.77	S143	112MB6	35000	18500
20.0	1348	2.0	71.07	S123	100LB4	30000	11200
19.8	1404	1.8	49.04	S122	132S6	30000	11200
19.7	1408	1.2	47.13	S102	112MB6	22000	9000
19.6	1419	1.8	49.04	S122	132SA6	30000	11200
19.5	1378	1.2	74.18	S103	112MS4	22000	9000
19.2	1357	1.7	151.43	S123	100L2	30000	11200
19.1	1407	1.1	74.18	S103	100LB4	22000	9000
19.0	1465	1.7	49.04	S122	112MB6	30000	11200
19.0	1371	1.6	151.43	S123	100LA2	30000	11200
19.0	1429	3.3	50.97	S143	132S6	35000	18500
18.8	1444	3.2	50.97	S143	132SA6	35000	18500
18.5	1501	1.0	50.25	S102	112MB6	22000	9000
18.5	1457	2.1	78.46	S123	112MS4	30000	11200
18.2	1491	3.1	50.97	S143	112MB6	35000	18500
18.2	1476	2.9	79.45	S143	112MS4	35000	18500
18.1	1488	2.0	78.46	S123	100LB4	30000	11200
18.0	1539	1.8	53.75	S122	132S6	30000	11200
17.9	1555	1.8	53.75	S122	132SA6	30000	11200
17.9	1507	2.8	79.45	S143	100LB4	35000	18500
17.8	1512	1.1	81.39	S103	112MS4	22000	9000
17.4	1544	1.0	81.39	S103	100LB4	22000	9000
17.3	1606	1.7	53.75	S122	112MB6	30000	11200
17.0	1603	3.1	57.17	S143	132S6	35000	18500
16.8	1620	3.1	57.17	S143	132SA6	35000	18500
16.6	1621	1.9	87.27	S123	112MS4	30000	11200
16.3	1655	1.8	87.27	S123	100LB4	30000	11200
16.3	1591	1.4	177.53	S123	100L2	30000	11200
16.3	1672	3.0	57.17	S143	112MB6	35000	18500
16.2	1667	1.0	89.77	S103	112MS4	22000	9000
16.2	1608	1.4	177.53	S123	100LA2	30000	11200
15.8	1702	0.9	89.77	S103	100LB4	22000	9000
15.7	1774	0.9	59.40	S102	112MB6	22000	9000
15.0	1818	1.6	64.84	S123	132S6	30000	11200
15.0	1814	2.8	64.68	S143	132S6	35000	18500
14.9	1744	1.3	194.59	S123	100L2	30000	11200
14.8	1837	1.5	64.84	S123	132SA6	30000	11200
14.8	1833	2.7	64.68	S143	132SA6	35000	18500
14.7	1890	1.7	66.00	S122	132S6	30000	11200
14.7	1762	1.3	194.59	S123	100LA2	30000	11200
14.7	1835	2.4	98.81	S143	112MS4	35000	18500

5.1 S MOTORREDUCTORES (50Hz)

3.00 kW

n2 [rpm]	M2 [Nm]	fs	i	Reductor	Motor	Fr2 D [N]	Fr2 C-L [N]
14.5	1910	1.6	66.00	S122	132SA6	30000	11200
14.4	1874	2.4	98.81	S143	100LB4	35000	18500
14.4	1892	2.7	64.68	S143	112MB6	35000	18500
14.3	1896	1.5	64.84	S123	112MB6	30000	11200
14.1	1971	1.6	66.00	S122	112MB6	30000	11200
14.0	1936	2.6	69.06	S143	132S6	35000	18500
13.9	1957	2.6	69.06	S143	132SA6	35000	18500
13.7	1967	1.5	105.91	S123	112MS4	30000	11200
13.6	1993	1.4	71.07	S123	132S6	30000	11200
13.5	2014	1.4	71.07	S123	132SA6	30000	11200
13.5	1932	1.2	215.60	S123	100L2	30000	11200
13.5	2020	2.5	69.06	S143	112MB6	35000	18500
13.4	2009	1.5	105.91	S123	100LB4	30000	11200
13.3	1952	1.2	215.60	S123	100LA2	30000	11200
13.2	2044	2.3	110.05	S143	112MS4	35000	18500
13.2	2065	4.0	73.63	S153	132S6	40000	19400
13.1	2079	1.4	71.07	S123	112MB6	30000	11200
13.0	2086	3.9	73.63	S153	132SA6	40000	19400
12.9	2090	1.4	112.52	S123	112MS4	30000	11200
12.9	2087	2.3	110.05	S143	100LB4	35000	18500
12.6	2134	1.4	112.52	S123	100LB4	30000	11200
12.4	2200	1.4	78.46	S123	132S6	30000	11200
12.2	2223	1.4	78.46	S123	132SA6	30000	11200
12.2	2228	2.0	79.45	S143	132S6	35000	18500
12.1	2141	1.1	238.93	S123	100L2	30000	11200
12.1	2251	2.0	79.45	S143	132SA6	35000	18500
12.0	2164	1.0	238.93	S123	100LA2	30000	11200
11.9	2295	1.4	78.46	S123	112MB6	30000	11200
11.8	2291	1.3	123.33	S123	112MS4	30000	11200
11.7	2324	1.9	79.45	S143	112MB6	35000	18500
11.7	2293	2.1	123.44	S143	112MS4	35000	18500
11.5	2339	1.3	123.33	S123	100LB4	30000	11200
11.5	2341	2.0	123.44	S143	100LB4	35000	18500
11.2	2415	1.2	130.04	S123	112MS4	30000	11200
11.1	2447	1.3	87.27	S123	132S6	30000	11200
11.1	2444	3.1	87.16	S153	132S6	40000	19400
11.0	2473	1.3	87.27	S123	132SA6	30000	11200
11.0	2470	3.0	87.16	S153	132SA6	40000	19400
10.9	2466	1.2	130.04	S123	100LB4	30000	11200
10.8	2485	1.2	133.78	S123	112MS4	30000	11200
10.7	2552	1.2	87.27	S123	112MB6	30000	11200
10.6	2537	1.2	133.78	S123	100LB4	30000	11200
10.4	2594	1.9	139.64	S143	112MS4	35000	18500
10.2	2648	1.8	139.64	S143	100LB4	35000	18500
10.0	2728	3.1	97.27	S153	132S6	40000	19400

5.1 S MOTORREDUCTORES (50Hz)

3.00 kW

n2 [rpm]	M2 [Nm]	fs	i	Reductor	Motor	Fr2 D [N]	Fr2 C-L [N]
9.9	2756	3.0	97.27	S153	132SA6	40000	19400
9.8	2771	1.7	98.81	S143	132S6	35000	18500
9.7	2800	1.7	98.81	S143	132SA6	35000	18500
9.7	2769	1.7	149.10	S143	112MS4	35000	18500
9.6	2813	1.1	151.43	S123	112MS4	30000	11200
9.5	2828	1.7	149.10	S143	100LB4	35000	18500
9.4	2872	1.0	151.43	S123	100LB4	30000	11200
9.4	2890	1.6	98.81	S143	112MB6	35000	18500
9.2	2970	1.1	105.91	S123	132S6	30000	11200
9.2	2925	1.3	157.49	S143	112MS4	35000	18500
9.1	3001	1.0	105.91	S123	132SA6	30000	11200
9.0	2987	1.3	157.49	S143	100LB4	35000	18500
8.8	3098	1.0	105.91	S123	112MB6	30000	11200
8.8	3086	1.6	110.05	S143	132S6	35000	18500
8.7	3118	1.6	110.05	S143	132SA6	35000	18500
8.7	3131	3.1	111.67	S153	132S6	40000	19400
8.6	3155	1.0	112.52	S123	132S6	30000	11200
8.6	3164	3.0	111.67	S153	132SA6	40000	19400
8.5	3188	1.0	112.52	S123	132SA6	30000	11200
8.5	3219	1.5	110.05	S143	112MB6	35000	18500
8.5	3186	1.5	171.55	S143	112MS4	35000	18500
8.3	3291	1.0	112.52	S123	112MB6	30000	11200
8.3	3253	1.4	171.55	S143	100LB4	35000	18500
8.3	3258	1.3	175.41	S143	112MS4	35000	18500
8.2	3297	0.9	177.53	S123	112MS4	30000	11200
8.1	3327	1.3	175.41	S143	100LB4	35000	18500
7.9	3458	0.9	123.33	S123	132S6	30000	11200
7.9	3461	1.4	123.44	S143	132S6	35000	18500
7.9	3437	2.9	122.57	S153	132S6	40000	19400
7.8	3494	0.9	123.33	S123	132SA6	30000	11200
7.8	3498	1.4	123.44	S143	132SA6	35000	18500
7.8	3473	2.9	122.57	S153	132SA6	40000	19400
7.5	3610	1.4	123.44	S143	112MB6	35000	18500
7.4	3654	1.3	196.74	S143	112MS4	35000	18500
7.2	3731	1.3	196.74	S143	100LB4	35000	18500
7.0	3904	2.5	139.21	S153	132S6	40000	19400
6.9	3916	1.3	139.64	S143	132S6	35000	18500
6.9	3957	1.3	139.64	S143	132SA6	35000	18500
6.9	3944	2.4	139.21	S153	132SA6	40000	19400
6.7	4084	1.2	139.64	S143	112MB6	35000	18500
6.5	4181	1.2	149.10	S143	132S6	35000	18500
6.5	4134	1.1	222.57	S143	112MS4	35000	18500
6.4	4224	1.2	149.10	S143	132SA6	35000	18500
6.4	4221	1.1	222.57	S143	100LB4	35000	18500
6.3	4319	1.7	154.02	S153	132S6	40000	19400

5.1 S MOTORREDUCTORES (50Hz)

3.00 kW

n2 [rpm]	M2 [Nm]	fs	i	Reductor	Motor	Fr2 D [N]	Fr2 C-L [N]
6.2	4361	1.2	149.10	S143	112MB6	35000	18500
6.2	4364	1.7	154.02	S153	132SA6	40000	19400
6.1	4414	1.1	237.63	S143	112MS4	35000	18500
6.1	4487	1.9	160.02	S153	132S6	40000	19400
6.0	4507	1.1	237.63	S143	100LB4	35000	18500
6.0	4534	1.9	160.02	S153	132SA6	40000	19400
5.7	4810	1.0	171.55	S143	132S6	35000	18500
5.6	4861	1.0	171.55	S143	132SA6	35000	18500
5.5	4958	1.7	176.81	S153	132S6	40000	19400
5.4	5017	1.0	171.55	S143	112MB6	35000	18500
5.4	5010	1.7	176.81	S153	132SA6	40000	19400
5.3	5078	0.9	273.41	S143	112MS4	35000	18500
5.2	5185	0.9	273.41	S143	100LB4	35000	18500
5.0	5442	1.7	194.06	S153	132S6	40000	19400
4.9	5499	1.7	194.06	S153	132SA6	40000	19400
4.4	6181	1.6	220.42	S153	132S6	40000	19400
4.4	6245	1.6	220.42	S153	132SA6	40000	19400
3.8	7105	1.2	253.36	S153	132S6	40000	19400
3.8	7179	1.2	253.36	S153	132SA6	40000	19400

4.00 kW

n2 [rpm]	M2 [Nm]	fs	i	Reductor	Motor	Fr2 D [N]	Fr2 C-L [N]
366.3	97	2.6	8.00	S062	112M2	5122	2049
362.5	98	2.5	8.00	S062	112MA2	5135	2054
358.8	99	2.5	8.00	S062	100LB2	5149	2059
339.7	104	1.2	8.63	S052	112M2	2814	2814
336.2	105	1.2	8.63	S052	112MA2	2820	2820
332.8	106	1.2	8.63	S052	100LB2	2825	2825
328.4	108	2.3	8.92	S062	112M2	5262	2105
325.1	109	2.3	8.92	S062	112MA2	5275	2110
321.7	110	2.2	8.92	S062	100LB2	5288	2115
307.0	115	2.3	9.55	S062	112M2	5348	2139
303.8	116	2.3	9.55	S062	112MA2	5361	2144
300.7	118	2.3	9.55	S062	100LB2	5374	2150
288.6	123	4.0	9.94	S082	100LB2	11667	3333
275.2	129	2.1	10.65	S062	112M2	5486	2195
272.4	130	2.1	10.65	S062	112MA2	5500	2200
269.6	131	2.1	10.65	S062	100LB2	5513	2205
263.0	135	1.1	11.14	S052	112M2	2939	2939
260.3	136	1.0	11.14	S052	112MA2	2944	2944
257.6	137	1.0	11.14	S052	100LB2	2948	2948
252.5	140	3.7	11.61	S082	112M2	12155	3473
250.2	141	2.1	11.71	S062	112M2	5606	2243

5.1 S MOTORREDUCTORES (50Hz)

4.00 kW

n2 [rpm]	M2 [Nm]	fs	i	Reductor	Motor	Fr2 D [N]	Fr2 C-L [N]
249.9	142	3.7	11.61	S082	112MA2	12193	3484
247.7	143	2.0	11.71	S062	112MA2	5619	2248
247.3	143	3.7	11.61	S082	100LB2	12231	3495
245.1	144	2.0	11.71	S062	100LB2	5632	2253
244.2	145	1.0	12.00	S052	112M2	2971	2971
241.7	146	1.0	12.00	S052	112MA2	2975	2975
239.2	148	1.0	12.00	S052	100LB2	2980	2980
229.8	154	3.7	12.75	S082	112M2	12507	3573
227.5	156	3.6	12.75	S082	112MA2	12546	3585
225.1	157	3.6	12.75	S082	100LB2	12585	3596
224.4	158	2.0	13.06	S062	112M2	5741	2297
222.1	159	2.0	13.06	S062	112MA2	5754	2302
219.8	161	2.0	13.06	S062	100LB2	5767	2307
219.4	161	2.0	13.36	S062	112M2	5769	2308
217.1	163	1.9	13.36	S062	112MA2	5781	2313
214.9	165	1.9	13.36	S062	100LB2	5794	2318
208.6	170	3.4	14.04	S082	112M2	12877	3679
206.5	171	3.3	14.04	S082	112MA2	12917	3691
204.4	173	3.3	14.04	S082	100LB2	12958	3702
197.6	186	3.0	7.34	S082	112M4	13068	3734
196.2	187	2.9	7.34	S082	112MA4	13095	3741
189.9	186	3.1	15.43	S082	112M2	13246	3784
188.0	188	3.1	15.43	S082	112MA2	13286	3796
186.3	190	3.0	15.73	S082	112M2	13321	3806
186.0	190	3.0	15.43	S082	100LB2	13328	3808
184.4	192	3.0	15.73	S082	112MA2	13362	3818
183.8	192	1.8	15.94	S062	112M2	5979	2392
182.5	194	3.0	15.73	S082	100LB2	13404	3830
182.0	194	1.7	15.94	S062	112MA2	5991	2396
181.3	202	1.6	8.00	S062	112M4	5950	2380
181.3	195	1.7	16.16	S062	112M2	5995	2398
180.1	197	1.7	15.94	S062	100LB2	6003	2401
180.0	204	1.6	8.00	S062	112MA4	5958	2383
179.8	204	2.9	8.06	S082	112M4	13439	3840
179.4	197	1.7	16.16	S062	112MA2	6007	2403
178.6	205	2.9	8.06	S082	112MA4	13467	3848
177.6	199	1.7	16.16	S062	100LB2	6019	2408
169.4	209	2.8	17.29	S082	112M2	13704	3915
167.7	211	2.7	17.29	S082	112MA2	13746	3927
165.9	213	2.7	17.29	S082	100LB2	13788	3939
162.8	225	4.0	8.85	S102	112MA4	17159	4903
162.5	226	1.5	8.92	S062	112M4	6068	2427
161.4	227	1.5	8.92	S062	112MA4	6075	2430
154.0	230	2.5	19.03	S082	112M2	14096	4027
152.4	232	2.5	19.03	S082	112MA2	14139	4040

5.1 S MOTORREDUCTORES (50Hz)

4.00 kW

n2 [rpm]	M2 [Nm]	fs	i	Reductor	Motor	Fr2 D [N]	Fr2 C-L [N]
151.9	241	1.5	9.55	S062	112M4	6137	2455
151.9	233	1.4	19.29	S062	112M2	6190	2476
150.9	243	1.5	9.55	S062	112MA4	6144	2458
150.8	235	2.5	19.03	S082	100LB2	14182	4052
150.4	235	1.4	19.29	S062	112MA2	6201	2480
149.9	236	1.5	19.55	S062	112M2	6205	2482
148.8	238	1.4	19.29	S062	100LB2	6212	2485
148.3	239	1.4	19.55	S062	112MA2	6215	2486
146.8	241	1.4	19.55	S062	100LB2	6226	2490
145.8	251	2.6	9.94	S082	112M4	14294	4084
145.5	243	2.4	20.14	S082	112M2	14332	4095
144.8	253	2.6	9.94	S082	112MA4	14323	4092
144.0	246	2.3	20.14	S082	112MA2	14376	4107
142.5	248	2.3	20.14	S082	100LB2	14419	4120
136.2	269	1.3	10.65	S062	112M4	6241	2497
135.3	271	1.3	10.65	S062	112MA4	6248	2499
133.2	275	3.5	10.88	S102	112M4	18243	5212
132.4	267	2.2	22.13	S082	112M2	14731	4209
132.4	267	3.9	22.13	S102	112M2	18301	5229
132.3	277	3.4	10.88	S102	112MA4	18281	5223
131.1	270	2.2	22.13	S082	112MA2	14775	4221
131.1	270	3.9	22.13	S102	112MA2	18358	5245
130.8	283	2.0	7.34	S082	132MA6	14742	4212
129.7	273	2.2	22.13	S082	100LB2	14819	4234
129.7	273	3.8	22.13	S102	100LB2	18416	5262
126.4	280	1.3	23.18	S062	112M2	6372	2549
125.1	283	1.2	23.18	S062	112MA2	6381	2552
124.9	294	2.4	11.61	S082	112M4	14947	4271
124.1	296	2.4	11.61	S082	112MA4	14977	4279
123.8	296	1.3	11.71	S062	112M4	6325	2530
123.8	286	1.2	23.18	S062	100LB2	6391	2556
123.4	287	1.2	23.75	S062	112M2	6394	2558
123.0	298	1.3	11.71	S062	112MA4	6330	2532
122.1	290	1.2	23.75	S062	112MA2	6403	2561
122.1	290	2.1	24.00	S082	112M2	15081	4309
120.8	293	1.2	23.75	S062	100LB2	6412	2565
120.8	293	2.0	24.00	S082	112MA2	15125	4322
120.7	293	3.8	24.28	S102	112M2	18824	5378
119.6	296	2.0	24.00	S082	100LB2	15171	4334
119.5	296	3.8	24.28	S102	112MA2	18883	5395
119.1	311	2.0	8.06	S082	132MA6	15144	4327
119.1	311	2.9	8.06	S102	132MA6	18865	5390
118.2	299	3.8	24.28	S102	100LB2	18942	5412
116.5	304	1.2	25.14	S062	112M2	6443	2577
115.3	307	1.2	25.14	S062	112MA2	6452	2581

5.1 S MOTORREDUCTORES (50Hz)

4.00 kW

n2 [rpm]	M2 [Nm]	fs	i	Reductor	Motor	Fr2 D [N]	Fr2 C-L [N]
114.1	310	1.2	25.14	S062	100LB2	6460	2584
113.7	322	2.3	12.75	S082	112M4	15353	4387
113.7	322	3.1	12.75	S102	112M4	19136	5467
112.9	325	2.3	12.75	S082	112MA4	15384	4395
112.9	325	3.1	12.75	S102	112MA4	19176	5479
112.5	315	1.9	26.05	S082	112M2	15439	4411
111.3	318	1.9	26.05	S082	112MA2	15484	4424
111.3	318	3.5	26.33	S102	112M2	19292	5512
111.0	330	1.3	13.06	S062	112M4	6409	2564
110.3	333	1.3	13.06	S062	112MA4	6414	2566
110.2	321	1.9	26.05	S082	100LB2	15530	4437
110.1	321	3.5	26.33	S102	112MA2	19352	5529
109.0	325	3.5	26.33	S102	100LB2	19413	5546
108.6	338	1.2	13.36	S062	112M4	6425	2570
108.5	341	2.8	8.85	S102	132MA6	19398	5542
107.8	340	1.2	13.36	S062	112MA4	6430	2572
107.4	330	2.0	27.29	S082	112M2	15644	4470
106.3	333	2.0	27.29	S082	112MA2	15690	4483
105.9	334	1.1	27.66	S062	112M2	6518	2607
105.2	336	2.0	27.29	S082	100LB2	15736	4496
104.9	337	1.1	27.66	S062	112MA2	6525	2610
103.8	341	1.1	27.66	S062	100LB2	6533	2613
103.6	354	3.4	13.99	S102	112M4	19676	5622
103.2	355	2.1	14.04	S082	112M4	15778	4508
102.9	356	3.4	13.99	S102	112MA4	19716	5633
102.5	358	2.1	14.04	S082	112MA4	15808	4517
102.2	346	1.9	28.67	S082	112M2	15865	4533
101.1	350	1.9	28.67	S082	112MA2	15911	4546
100.1	354	1.9	28.67	S082	100LB2	15958	4559
99.0	358	1.9	29.60	S082	112M2	16008	4574
98.1	361	3.1	29.87	S102	112M2	20035	5724
98.0	361	1.9	29.60	S082	112MA2	16054	4587
97.7	362	1.0	30.00	S062	112M2	6573	2629
97.1	364	3.1	29.87	S102	112MA2	20097	5742
97.0	365	1.8	29.60	S082	100LB2	16101	4600
96.7	366	1.0	30.00	S062	112MA2	6580	2632
96.5	384	1.8	9.94	S082	132MA6	16064	4590
96.1	368	3.1	29.87	S102	100LB2	20159	5760
95.7	370	1.0	30.00	S062	100LB2	6586	2634
94.0	390	2.0	15.43	S082	112M4	16197	4628
94.0	390	3.2	15.43	S102	112M4	20257	5788
93.3	393	2.0	15.43	S082	112MA4	16228	4637
93.3	393	3.2	15.43	S102	112MA4	20299	5800
92.2	398	1.9	15.73	S082	112M4	16282	4652
92.2	384	2.0	31.78	S082	112M2	16328	4665

5.1 S MOTORREDUCTORES (50Hz)

4.00 kW

n2 [rpm]	M2 [Nm]	fs	i	Reductor	Motor	Fr2 D [N]	Fr2 C-L [N]
91.6	400	1.9	15.73	S082	112MA4	16313	4661
91.3	388	1.9	31.78	S082	112MA2	16375	4679
91.0	403	1.1	15.94	S062	112M4	6525	2610
90.4	406	1.1	15.94	S062	112MA4	6528	2611
90.4	391	2.9	32.40	S102	112M2	20527	5865
90.3	392	1.9	31.78	S082	100LB2	16422	4692
89.7	409	1.1	16.16	S062	112M4	6531	2613
89.5	395	2.8	32.40	S102	112MA2	20589	5883
89.1	412	1.1	16.16	S062	112MA4	6534	2614
88.6	400	2.8	32.40	S102	100LB2	20653	5901
88.2	420	2.4	10.88	S102	132MA6	20631	5894
84.2	435	3.0	17.21	S102	112M4	20922	5978
83.9	422	1.8	34.91	S082	112M2	16758	4788
83.9	422	2.5	34.91	S102	112M2	20985	5996
83.8	437	1.8	17.29	S082	112M4	16713	4775
83.7	438	3.0	17.21	S102	112MA4	20965	5990
83.3	440	1.7	17.29	S082	112MA4	16744	4784
83.1	426	1.8	34.91	S082	112MA2	16806	4802
83.1	426	2.5	34.91	S102	112MA2	21048	6014
82.7	448	1.6	11.61	S082	132MA6	16760	4789
82.5	429	1.7	35.50	S082	112M2	16836	4810
82.2	430	1.7	34.91	S082	100LB2	16854	4815
82.2	430	2.4	34.91	S102	100LB2	21113	6032
81.7	433	1.7	35.50	S082	112MA2	16883	4824
80.8	438	1.7	35.50	S082	100LB2	16931	4837
80.1	442	1.0	36.57	S062	112M2	6670	2668
79.3	446	1.0	36.57	S062	112MA2	6673	2669
76.5	463	2.4	38.30	S102	112M2	21565	6161
76.3	481	2.9	19.00	S102	112M4	21536	6153
76.2	481	1.6	19.03	S082	112M4	17150	4900
75.8	484	2.9	19.00	S102	112MA4	21579	6166
75.7	485	1.6	19.03	S082	112MA4	17182	4909
75.7	467	2.4	38.30	S102	112MA2	21630	6180
75.3	492	1.6	12.75	S082	132MA6	17189	4911
75.3	492	2.1	12.75	S102	132MA6	21608	6174
75.2	488	0.9	19.29	S062	112M4	6578	2631
74.9	472	2.4	38.30	S102	100LB2	21696	6199
74.7	491	0.9	19.29	S062	112MA4	6579	2632
74.2	494	0.9	19.55	S062	112M4	6579	2632
73.7	498	0.9	19.55	S062	112MA4	6580	2632
73.2	484	1.6	40.05	S082	112M2	17396	4970
72.4	489	1.5	40.05	S082	112MA2	17444	4984
72.0	509	1.5	20.14	S082	112M4	17412	4975
71.7	494	1.5	40.05	S082	100LB2	17493	4998
71.5	513	1.5	20.14	S082	112MA4	17444	4984

5.1 S MOTORREDUCTORES (50Hz)

4.00 kW

n2 [rpm]	M2 [Nm]	fs	i	Reductor	Motor	Fr2 D [N]	Fr2 C-L [N]
69.6	527	2.7	20.83	S102	112M4	22000	6319
69.1	530	2.6	20.83	S102	112MA4	22000	6332
68.9	514	2.0	42.53	S102	112M2	22000	6352
68.6	540	2.3	13.99	S102	132MA6	22000	6342
68.4	542	1.5	14.04	S082	132MA6	17635	5039
68.2	519	2.0	42.53	S102	112MA2	22000	6371
68.1	520	1.4	43.05	S082	112M2	17735	5067
67.5	524	2.0	42.53	S102	100LB2	22000	6390
67.4	525	1.4	43.05	S082	112MA2	17784	5081
67.3	551	3.4	14.27	S142	132MA6	35000	18500
66.7	531	1.4	43.05	S082	100LB2	17833	5095
66.6	531	1.8	44.00	S102	112M2	22000	6415
65.9	537	1.8	44.00	S102	112MA2	22000	6434
65.7	539	3.3	44.63	S122	112M2	30000	9203
65.5	560	1.4	22.13	S082	112M4	17848	5100
65.5	560	2.5	22.13	S102	112M4	22000	6430
65.2	543	1.8	44.00	S102	100LB2	22000	6453
65.1	563	1.4	22.13	S082	112MA4	17881	5109
65.1	563	2.5	22.13	S102	112MA4	22000	6443
65.0	545	3.3	44.63	S122	112MA2	30000	9231
64.3	550	3.3	44.63	S122	100LB2	30000	9258
62.2	595	1.4	15.43	S082	132MA6	18000	5163
62.2	569	2.1	47.13	S102	112M2	22000	6543
62.2	595	2.2	15.43	S102	132MA6	22000	6522
61.5	575	2.1	47.13	S102	112MA2	22000	6562
61.0	607	1.3	15.73	S082	132MA6	18000	5189
60.9	581	2.1	47.13	S102	100LB2	22000	6582
60.4	607	1.3	24.00	S082	112M4	18000	5208
60.0	611	1.3	24.00	S082	112MA4	18000	5217
60.0	618	3.3	16.01	S142	132MA6	35000	18500
59.7	614	2.4	24.28	S102	112M4	22000	6602
59.7	592	3.0	49.04	S122	112M2	30000	9455
59.3	618	2.4	24.28	S102	112MA4	22000	6615
59.1	598	3.0	49.04	S122	112MA2	30000	9483
58.5	605	3.0	49.04	S122	100LB2	30000	9511
58.3	607	1.2	50.25	S082	112M2	18000	5276
58.3	607	1.7	50.25	S102	112M2	22000	6664
57.7	613	1.2	50.25	S082	112MA2	18000	5290
57.7	613	1.7	50.25	S102	112MA2	22000	6684
57.1	620	1.2	50.25	S082	100LB2	18000	5304
57.1	620	1.7	50.25	S102	100LB2	22000	6703
55.8	664	2.1	17.21	S102	132MA6	22000	6727
55.7	659	1.2	26.05	S082	112M4	18000	5318
55.5	667	1.2	17.29	S082	132MA6	18000	5315
55.3	663	1.2	26.05	S082	112MA4	18000	5327

5.1 S MOTORREDUCTORES (50Hz)

4.00 kW

n2 [rpm]	M2 [Nm]	fs	i	Reductor	Motor	Fr2 D [N]	Fr2 C-L [N]
55.1	666	2.3	26.33	S102	112M4	22000	6756
54.7	671	2.2	26.33	S102	112MA4	22000	6769
54.5	649	3.0	53.75	S122	112M2	30000	9704
54.0	655	1.1	54.27	S082	112M2	18000	5381
54.0	656	3.0	53.75	S122	112MA2	30000	9732
53.4	662	1.1	54.27	S082	112MA2	18000	5395
53.4	663	2.9	53.75	S122	100LB2	30000	9760
53.1	690	1.3	27.29	S082	112M4	18000	5380
53.1	666	1.5	55.14	S102	112M2	22000	6841
53.0	699	3.3	18.11	S142	132MA6	35000	18500
52.9	669	1.1	54.27	S082	100LB2	18000	5409
52.8	695	1.3	27.29	S082	112MA4	18000	5389
52.6	673	1.4	55.14	S102	112MA2	22000	6861
52.1	680	1.4	55.14	S102	100LB2	22000	6881
50.6	725	1.2	28.67	S082	112M4	18000	5447
50.5	734	1.1	19.03	S082	132MA6	18000	5443
50.5	733	2.0	19.00	S102	132MA6	22000	6915
50.2	730	1.2	28.67	S082	112MA4	18000	5456
49.7	746	3.3	19.33	S142	132MA6	35000	18500
49.3	717	1.7	59.40	S102	112M2	22000	6986
49.0	749	1.2	29.60	S082	112M4	18000	5489
48.8	725	1.7	59.40	S102	112MA2	22000	7006
48.6	754	1.2	29.60	S082	112MA4	18000	5498
48.5	755	2.0	29.87	S102	112M4	22000	6997
48.3	732	1.6	59.40	S102	100LB2	22000	7026
48.2	761	2.0	29.87	S102	112MA4	22000	7011
47.7	777	1.0	20.14	S082	132MA6	18000	5519
47.5	772	3.9	30.51	S122	112M4	30000	10053
47.3	749	1.0	61.98	S082	112M2	18000	5562
47.2	777	3.9	30.51	S122	112MA4	30000	10072
46.1	804	1.8	20.83	S102	132MA6	22000	7092
45.6	804	1.2	31.78	S082	112M4	18000	5584
45.3	809	1.2	31.78	S082	112MA4	18000	5593
45.2	820	3.6	21.25	S122	132MA6	30000	10184
45.2	767	2.6	64.84	S123	112M2	30000	10241
44.8	819	1.8	32.40	S102	112M4	22000	7155
44.7	775	2.6	64.84	S123	112MA2	30000	10270
44.4	825	1.8	32.40	S102	112MA4	22000	7169
44.4	797	2.8	66.00	S122	112M2	30000	10273
44.3	828	3.6	32.76	S122	112M4	30000	10250
44.3	783	2.6	64.84	S123	100LB2	30000	10299
44.0	834	3.6	32.76	S122	112MA4	30000	10269
43.9	805	2.8	66.00	S122	112MA2	30000	10302
43.5	814	2.8	66.00	S122	100LB2	30000	10331
43.4	854	1.0	22.13	S082	132MA6	18000	5644

5.1 S MOTORREDUCTORES (50Hz)

4.00 kW

n2 [rpm]	M2 [Nm]	fs	i	Reductor	Motor	Fr2 D [N]	Fr2 C-L [N]
43.4	854	1.7	22.13	S102	132MA6	22000	7210
43.4	846	3.5	33.44	S122	112M4	30000	10308
43.2	819	1.5	67.84	S102	112M2	22000	7247
43.2	858	3.0	22.24	S142	132MA6	35000	18500
43.1	852	3.5	33.44	S122	112MA4	30000	10327
42.9	863	3.4	22.37	S122	132MA6	30000	10326
42.7	828	1.4	67.84	S102	112MA2	22000	7268
42.3	836	1.4	67.84	S102	100LB2	22000	7288
41.5	883	1.1	34.91	S082	112M4	18000	5710
41.5	883	1.6	34.91	S102	112M4	22000	7302
41.3	889	1.1	34.91	S082	112MA4	18000	5719
41.3	889	1.6	34.91	S102	112MA4	22000	7316
41.2	890	3.4	35.20	S122	112M4	30000	10451
41.2	899	3.4	23.29	S122	132MA6	30000	10439
41.2	840	2.4	71.07	S123	112M2	30000	10501
40.9	896	3.3	35.20	S122	112MA4	30000	10470
40.8	898	1.1	35.50	S082	112M4	18000	5732
40.8	849	2.4	71.07	S123	112MA2	30000	10531
40.6	904	1.1	35.50	S082	112MA4	18000	5741
40.4	858	2.4	71.07	S123	100LB2	30000	10561
40.0	926	0.9	24.00	S082	132MA6	18000	5751
39.5	937	1.7	24.28	S102	132MA6	22000	7392
39.5	877	1.4	74.18	S103	112M2	22000	7439
39.1	886	1.4	74.18	S103	112MA2	22000	7460
38.7	896	1.3	74.18	S103	100LB2	22000	7481
38.0	975	2.3	25.26	S142	132MA6	35000	18500
37.9	969	1.5	38.30	S102	112M4	22000	7486
37.6	975	1.5	38.30	S102	112MA4	22000	7499
37.3	928	2.4	78.46	S123	112M2	30000	10786
37.0	938	2.4	78.46	S123	112MA2	30000	10815
36.7	1009	3.1	26.15	S122	132MA6	30000	10765
36.6	947	2.4	78.46	S123	100LB2	30000	10845
36.5	1016	1.6	26.33	S102	132MA6	22000	7553
36.2	1013	1.0	40.05	S082	112M4	18000	5891
36.0	1020	1.0	40.05	S082	112MA4	18000	5900
36.0	963	1.2	81.39	S103	112M2	22000	7628
35.6	973	1.2	81.39	S103	112MA2	22000	7649
35.5	1042	0.9	27.29	S082	132MA6	18000	5905
35.3	983	1.2	81.39	S103	100LB2	22000	7670
35.3	1039	2.9	41.07	S122	112M4	30000	10886
35.1	1046	2.9	41.07	S122	112MA4	30000	10905
34.1	1076	1.3	42.53	S102	112M4	22000	7694
33.9	1083	1.3	42.53	S102	112MA4	22000	7708
33.9	1093	2.3	28.33	S142	132MA6	35000	18500
33.7	1089	0.9	43.05	S082	112M4	18000	5985

5.1 S MOTORREDUCTORES (50Hz)

4.00 kW

n2 [rpm]	M2 [Nm]	fs	i	Reductor	Motor	Fr2 D [N]	Fr2 C-L [N]
33.6	1103	2.9	28.60	S122	132MA6	30000	11018
33.6	1032	2.2	87.27	S123	112M2	30000	11094
33.4	1096	0.9	43.05	S082	112MA4	18000	5994
33.3	1103	2.7	43.60	S122	112M4	30000	11056
33.2	1043	2.2	87.27	S123	112MA2	30000	11124
33.0	1113	1.2	44.00	S102	112M4	22000	7763
33.0	1110	2.7	43.60	S122	112MA4	30000	11075
32.9	1054	2.1	87.27	S123	100LB2	30000	11154
32.7	1121	1.2	44.00	S102	112MA4	22000	7777
32.6	1062	1.1	89.77	S103	112M2	22000	7828
32.5	1129	2.1	44.63	S122	112M4	30000	11122
32.3	1073	1.1	89.77	S103	112MA2	22000	7849
32.3	1137	2.1	44.63	S122	112MA4	30000	11142
32.1	1152	1.4	29.87	S102	132MA6	22000	7805
32.0	1084	1.1	89.77	S103	100LB2	22000	7871
31.7	1133	3.5	45.77	S143	112M4	35000	18500
31.5	1177	2.7	30.51	S122	132MA6	30000	11200
31.5	1141	3.5	45.77	S143	112MA4	35000	18500
30.8	1192	1.3	47.13	S102	112M4	22000	7901
30.6	1200	1.3	47.13	S102	112MA4	22000	7915
30.0	1237	2.3	32.05	S142	132MA6	35000	18500
29.6	1250	1.3	32.40	S102	132MA6	22000	7968
29.6	1240	1.9	49.04	S122	112M4	30000	11200
29.4	1249	1.9	49.04	S122	112MA4	30000	11200
29.3	1184	1.0	100.15	S103	112M2	22000	8054
29.3	1264	2.5	32.76	S122	132MA6	30000	11200
29.0	1197	1.0	100.15	S103	112MA2	22000	8075
28.9	1271	1.1	50.25	S102	112M4	22000	8030
28.7	1280	1.1	50.25	S102	112MA4	22000	8044
28.7	1290	2.4	33.44	S122	132MA6	30000	11200
28.4	1262	3.5	50.97	S143	112M4	35000	18500
28.3	1271	3.5	50.97	S143	112MA4	35000	18500
28.1	1320	2.3	34.22	S142	132MA6	35000	18500
27.7	1252	1.8	105.91	S123	112M2	30000	11200
27.5	1347	1.1	34.91	S102	132MA6	22000	8118
27.4	1265	1.8	105.91	S123	112MA2	30000	11200
27.3	1358	2.3	35.20	S122	132MA6	30000	11200
27.1	1279	1.8	105.91	S123	100LB2	30000	11200
27.0	1359	1.9	53.75	S122	112M4	30000	11200
26.8	1369	1.9	53.75	S122	112MA4	30000	11200
26.3	1394	0.9	55.14	S102	112M4	22000	8218
26.1	1404	0.9	55.14	S102	112MA4	22000	8232
26.0	1331	1.7	112.52	S123	112M2	30000	11200
25.8	1344	1.7	112.52	S123	112MA2	30000	11200
25.5	1358	1.7	112.52	S123	100LB2	30000	11200

5.1 S MOTORREDUCTORES (50Hz)

4.00 kW

n2 [rpm]	M2 [Nm]	fs	i	Reductor	Motor	Fr2 D [N]	Fr2 C-L [N]
25.4	1416	3.3	57.17	S143	112M4	35000	18500
25.2	1426	3.3	57.17	S143	112MA4	35000	18500
25.1	1478	1.1	38.30	S102	132MA6	22000	8304
24.4	1502	1.1	59.40	S102	112M4	22000	8368
24.4	1519	3.1	39.38	S142	132MA6	35000	18500
24.2	1513	1.1	59.40	S102	112MA4	22000	8382
23.8	1459	1.5	123.33	S123	112M2	30000	11200
23.5	1474	1.5	123.33	S123	112MA2	30000	11200
23.4	1584	2.0	41.07	S122	132MA6	30000	11200
23.3	1489	1.5	123.33	S123	100LB2	30000	11200
22.8	1624	0.9	42.53	S102	132MA6	22000	8493
22.5	1538	1.5	130.04	S123	112M2	30000	11200
22.4	1606	1.7	64.84	S123	112M4	30000	11200
22.4	1602	3.0	64.68	S143	112M4	35000	18500
22.3	1554	1.4	130.04	S123	112MA2	30000	11200
22.3	1613	3.0	64.68	S143	112MA4	35000	18500
22.2	1617	1.7	64.84	S123	112MA4	30000	11200
22.1	1570	1.4	130.04	S123	100LB2	30000	11200
22.0	1682	1.9	43.60	S122	132MA6	30000	11200
22.0	1669	1.8	66.00	S122	112M4	30000	11200
21.9	1582	1.4	133.78	S123	112M2	30000	11200
21.8	1681	1.8	66.00	S122	112MA4	30000	11200
21.7	1598	1.4	133.78	S123	112MA2	30000	11200
21.5	1722	1.5	44.63	S122	132MA6	30000	11200
21.5	1615	1.4	133.78	S123	100LB2	30000	11200
21.4	1716	0.9	67.84	S102	112M4	22000	8635
21.2	1728	0.9	67.84	S102	112MA4	22000	8649
21.0	1729	2.4	45.77	S143	132MA6	35000	18500
21.0	1710	2.9	69.06	S143	112M4	35000	18500
20.9	1722	2.8	69.06	S143	112MA4	35000	18500
20.4	1818	0.9	47.13	S102	132MA6	22000	8717
20.4	1760	1.5	71.07	S123	112M4	30000	11200
20.3	1772	1.5	71.07	S123	112MA4	30000	11200
19.6	1892	1.3	49.04	S122	132MA6	30000	11200
19.3	1791	1.3	151.43	S123	112M2	30000	11200
19.2	1809	1.2	151.43	S123	112MA2	30000	11200
19.0	1828	1.2	151.43	S123	100LB2	30000	11200
18.8	1926	2.4	50.97	S143	132MA6	35000	18500
18.5	1943	1.5	78.46	S123	112M4	30000	11200
18.4	1957	1.5	78.46	S123	112MA4	30000	11200
18.2	1968	2.2	79.45	S143	112M4	35000	18500
18.1	1981	2.1	79.45	S143	112MA4	35000	18500
17.9	2074	1.3	53.75	S122	132MA6	30000	11200
16.8	2160	2.3	57.17	S143	132MA6	35000	18500
16.6	2161	1.4	87.27	S123	112M4	30000	11200

5.1 S MOTORREDUCTORES (50Hz)

4.00 kW

n2 [rpm]	M2 [Nm]	fs	i	Reductor	Motor	Fr2 D [N]	Fr2 C-L [N]
16.5	2176	1.4	87.27	S123	112MA4	30000	11200
16.5	2100	1.1	177.53	S123	112M2	30000	11200
16.3	2121	1.1	177.53	S123	112MA2	30000	11200
16.2	2143	1.0	177.53	S123	100LB2	30000	11200
15.0	2420	3.8	64.05	S153	132MA6	40000	19400
14.8	2450	1.2	64.84	S123	132MA6	30000	11200
14.8	2443	2.1	64.68	S143	132MA6	35000	18500
14.7	2447	1.8	98.81	S143	112M4	35000	18500
14.6	2464	1.8	98.81	S143	112MA4	35000	18500
14.5	2546	1.2	66.00	S122	132MA6	30000	11200
13.9	2609	2.0	69.06	S143	132MA6	35000	18500
13.7	2623	1.1	105.91	S123	112M4	30000	11200
13.6	2641	1.1	105.91	S123	112MA4	30000	11200
13.5	2685	1.1	71.07	S123	132MA6	30000	11200
13.2	2725	1.7	110.05	S143	112M4	35000	18500
13.1	2744	1.7	110.05	S143	112MA4	35000	18500
13.0	2781	2.9	73.63	S153	132MA6	40000	19400
12.9	2786	1.1	112.52	S123	112M4	30000	11200
12.8	2806	1.1	112.52	S123	112MA4	30000	11200
12.2	2964	1.1	78.46	S123	132MA6	30000	11200
12.1	3002	1.5	79.45	S143	132MA6	35000	18500
11.8	3054	1.0	123.33	S123	112M4	30000	11200
11.7	3075	1.0	123.33	S123	112MA4	30000	11200
11.7	3057	1.6	123.44	S143	112M4	35000	18500
11.7	3078	1.5	123.44	S143	112MA4	35000	18500
11.2	3220	0.9	130.04	S123	112M4	30000	11200
11.1	3243	0.9	130.04	S123	112MA4	30000	11200
11.0	3297	1.0	87.27	S123	132MA6	30000	11200
11.0	3293	2.3	87.16	S153	132MA6	40000	19400
10.8	3313	0.9	133.78	S123	112M4	30000	11200
10.4	3458	1.4	139.64	S143	112M4	35000	18500
10.3	3482	1.4	139.64	S143	112MA4	35000	18500
9.9	3675	2.3	97.27	S153	132MA6	40000	19400
9.7	3733	1.2	98.81	S143	132MA6	35000	18500
9.7	3692	1.3	149.10	S143	112M4	35000	18500
9.7	3718	1.3	149.10	S143	112MA4	35000	18500
9.2	3900	1.0	157.49	S143	112M4	35000	18500
9.1	3927	1.0	157.49	S143	112MA4	35000	18500
8.7	4158	1.2	110.05	S143	132MA6	35000	18500
8.6	4219	2.3	111.67	S153	132MA6	40000	19400
8.5	4248	1.1	171.55	S143	112M4	35000	18500
8.4	4278	1.1	171.55	S143	112MA4	35000	18500
8.3	4344	1.0	175.41	S143	112M4	35000	18500
8.2	4374	1.0	175.41	S143	112MA4	35000	18500
7.8	4663	1.1	123.44	S143	132MA6	35000	18500

5.1 S MOTORREDUCTORES (50Hz)

4.00 kW

n2 [rpm]	M2 [Nm]	fs	i	Reductor	Motor	Fr2 D [N]	Fr2 C-L [N]
7.8	4630	2.2	122.57	S153	132MA6	40000	19400
7.4	4872	1.0	196.74	S143	112M4	35000	18500
7.3	4906	1.0	196.74	S143	112MA4	35000	18500
6.9	5276	1.0	139.64	S143	132MA6	35000	18500
6.9	5259	1.8	139.21	S153	132MA6	40000	19400
6.5	5575	0.9	149.10	S143	132MA6	35000	18500
6.2	5819	1.3	154.02	S153	132MA6	40000	19400
6.0	6045	1.4	160.02	S153	132MA6	40000	19400
5.4	6680	1.3	176.81	S153	132MA6	40000	19400
4.9	7331	1.3	194.06	S153	132MA6	40000	19400
4.4	8327	1.2	220.42	S153	132MA6	40000	19400
3.8	9571	0.9	253.36	S153	132MA6	40000	19400

4.80 kW

n2 [rpm]	M2 [Nm]	fs	i	Reductor	Motor	Fr2 D [N]	Fr2 C-L [N]
194.9	226	2.4	7.34	S082	112MB4	12999	3714
178.8	246	1.3	8.00	S062	112MB4	5706	2282
177.4	248	2.4	8.06	S082	112MB4	13359	3817
177.4	248	3.4	8.06	S102	112MB4	16604	4744
161.6	272	3.3	8.85	S102	112MB4	17078	4879
160.3	275	1.2	8.92	S062	112MB4	5792	2317
149.8	294	1.2	9.55	S062	112MB4	5840	2336
143.8	306	2.1	9.94	S082	112MB4	14184	4053
134.3	328	1.1	10.65	S062	112MB4	5908	2363
131.4	335	2.8	10.88	S102	112MB4	18175	5193
123.2	357	2.0	11.61	S082	112MB4	14811	4232
122.1	360	1.1	11.71	S062	112MB4	5955	2382
112.2	392	1.9	12.75	S082	112MB4	15199	4343
112.2	392	2.5	12.75	S102	112MB4	19046	5442
109.5	402	1.0	13.06	S062	112MB4	5994	2398
107.1	411	1.0	13.36	S062	112MB4	6000	2400
102.2	431	2.8	13.99	S102	112MB4	19571	5592
101.8	432	1.8	14.04	S082	112MB4	15603	4458
92.7	475	1.6	15.43	S082	112MB4	15999	4571
92.7	475	2.6	15.43	S102	112MB4	20136	5753
90.9	484	1.6	15.73	S082	112MB4	16080	4594
89.7	490	0.9	15.94	S062	112MB4	6013	2405
88.5	497	0.9	16.16	S062	112MB4	6012	2405
83.1	530	2.5	17.21	S102	112MB4	20779	5937
82.7	532	1.4	17.29	S082	112MB4	16485	4710
75.3	585	2.4	19.00	S102	112MB4	21370	6106
75.2	586	1.3	19.03	S082	112MB4	16894	4827
71.0	620	1.2	20.14	S082	112MB4	17137	4896

5.1 S MOTORREDUCTORES (50Hz)

4.80 kW

n2 [rpm]	M2 [Nm]	fs	i	Reductor	Motor	Fr2 D [N]	Fr2 C-L [N]
68.7	641	2.2	20.83	S102	112MB4	21929	6265
64.6	681	1.2	22.13	S082	112MB4	17540	5012
64.6	681	2.1	22.13	S102	112MB4	22000	6371
59.6	739	1.1	24.00	S082	112MB4	17889	5111
58.9	747	2.0	24.28	S102	112MB4	22000	6536
54.9	802	1.0	26.05	S082	112MB4	18000	5211
54.7	805	3.7	26.15	S122	112MB4	30000	9525
54.3	810	1.9	26.33	S102	112MB4	22000	6682
52.4	840	1.1	27.29	S082	112MB4	18000	5267
50.0	880	3.4	28.60	S122	112MB4	30000	9755
49.9	882	1.0	28.67	S082	112MB4	18000	5327
48.3	911	1.0	29.60	S082	112MB4	18000	5365
47.9	919	1.6	29.87	S102	112MB4	22000	6911
46.9	939	3.2	30.51	S122	112MB4	30000	9922
45.0	978	1.0	31.78	S082	112MB4	18000	5450
44.1	997	1.5	32.40	S102	112MB4	22000	7059
43.7	1008	3.0	32.76	S122	112MB4	30000	10106
42.8	1029	2.9	33.44	S122	112MB4	30000	10161
41.0	1074	0.9	34.91	S082	112MB4	18000	5560
41.0	1074	1.3	34.91	S102	112MB4	22000	7197
40.6	1083	2.8	35.20	S122	112MB4	30000	10294
40.3	1092	0.9	35.50	S082	112MB4	18000	5579
37.3	1179	1.3	38.30	S102	112MB4	22000	7368
34.8	1264	2.4	41.07	S122	112MB4	30000	10697
33.6	1309	1.1	42.53	S102	112MB4	22000	7561
32.8	1342	2.2	43.60	S122	112MB4	30000	10853
32.5	1354	1.0	44.00	S102	112MB4	22000	7623
32.0	1373	1.7	44.63	S122	112MB4	30000	10914
31.2	1379	2.9	45.77	S143	112MB4	35000	18500
30.3	1450	1.1	47.13	S102	112MB4	22000	7750
29.2	1509	1.6	49.04	S122	112MB4	30000	11159
28.5	1546	0.9	50.25	S102	112MB4	22000	7867
28.1	1536	2.9	50.97	S143	112MB4	35000	18500
26.6	1654	1.6	53.75	S122	112MB4	30000	11200
25.0	1723	2.7	57.17	S143	112MB4	35000	18500
22.1	1954	1.4	64.84	S123	112MB4	30000	11200
22.1	1949	2.4	64.68	S143	112MB4	35000	18500
21.7	2031	1.5	66.00	S122	112MB4	30000	11200
20.7	2081	2.3	69.06	S143	112MB4	35000	18500
20.1	2142	1.3	71.07	S123	112MB4	30000	11200
18.2	2364	1.3	78.46	S123	112MB4	30000	11200
18.0	2394	1.8	79.45	S143	112MB4	35000	18500
16.4	2630	1.1	87.27	S123	112MB4	30000	11200
14.5	2977	1.5	98.81	S143	112MB4	35000	18500
13.5	3191	0.9	105.91	S123	112MB4	30000	11200

5.1 S MOTORREDUCTORES (50Hz)

4.80 kW

n2 [rpm]	M2 [Nm]	fs	i	Reductor	Motor	Fr2 D [N]	Fr2 C-L [N]
13.0	3316	1.4	110.05	S143	112MB4	35000	18500
11.6	3720	1.3	123.44	S143	112MB4	35000	18500
10.2	4208	1.2	139.64	S143	112MB4	35000	18500
9.6	4493	1.1	149.10	S143	112MB4	35000	18500
8.3	5169	0.9	171.55	S143	112MB4	35000	18500

5.50 kW

n2 [rpm]	M2 [Nm]	fs	i	Reductor	Motor	Fr2 D [N]	Fr2 C-L [N]
402.0	121	3.4	7.34	S082	132S2	10422	2978
396.5	123	3.4	7.34	S082	112MB2	10466	2990
396.5	123	3.4	7.34	S082	132SA2	10466	2990
365.9	133	3.4	8.06	S082	132S2	10724	3064
363.8	134	1.9	8.00	S062	112MB2	4900	1960
360.9	135	3.3	8.06	S082	112MB2	10769	3077
360.9	135	3.3	8.06	S082	132SA2	10769	3077
326.2	149	1.7	8.92	S062	112MB2	5013	2005
304.9	160	1.7	9.55	S062	112MB2	5081	2032
296.7	164	3.0	9.94	S082	132S2	11422	3263
292.6	166	2.9	9.94	S082	112MB2	11469	3277
292.6	166	2.9	9.94	S082	132SA2	11469	3277
273.4	178	1.5	10.65	S062	112MB2	5187	2075
271.0	180	4.0	10.88	S102	132S2	14530	4151
267.4	182	3.9	10.88	S102	112MB2	14591	4169
267.4	182	3.9	10.88	S102	132SA2	14591	4169
254.2	191	2.7	11.61	S082	132S2	11958	3417
250.7	194	2.7	11.61	S082	112MB2	12006	3430
250.7	194	2.7	11.61	S082	132SA2	12006	3430
248.5	196	1.5	11.71	S062	112MB2	5276	2111
231.4	210	2.7	12.75	S082	132S2	12293	3512
231.4	210	3.6	12.75	S102	132S2	15254	4358
228.2	213	2.6	12.75	S082	112MB2	12342	3526
228.2	213	2.6	12.75	S082	132SA2	12342	3526
228.2	213	3.5	12.75	S102	112MB2	15318	4377
228.2	213	3.5	12.75	S102	132SA2	15318	4377
222.9	218	1.4	13.06	S062	112MB2	5372	2149
217.9	223	1.4	13.36	S062	112MB2	5391	2156
210.9	231	3.9	13.99	S102	132S2	15692	4483
210.1	232	2.5	14.04	S082	132S2	12643	3612
208.0	234	3.8	13.99	S102	112MB2	15758	4502
208.0	234	3.8	13.99	S102	132SA2	15758	4502
207.2	235	2.4	14.04	S082	112MB2	12693	3627
207.2	235	2.4	14.04	S082	132SA2	12693	3627
200.3	252	2.2	7.34	S082	132MS4	12789	3654

5.1 S MOTORREDUCTORES (50Hz)

5.50 kW

n2 [rpm]	M2 [Nm]	fs	i	Reductor	Motor	Fr2 D [N]	Fr2 C-L [N]
197.6	255	2.2	7.34	S082	132S4	12840	3668
191.2	254	2.3	15.43	S082	132S2	12991	3712
191.2	254	3.7	15.43	S102	132S2	16166	4619
188.6	258	2.2	15.43	S082	112MB2	13042	3726
188.6	258	2.2	15.43	S082	132SA2	13042	3726
188.6	258	3.6	15.43	S102	112MB2	16232	4638
188.6	258	3.6	15.43	S102	132SA2	16232	4638
187.6	259	2.2	15.73	S082	132S2	13062	3732
185.1	263	2.2	15.73	S082	112MB2	13113	3747
185.1	263	2.2	15.73	S082	132SA2	13113	3747
182.6	266	1.3	15.94	S062	112MB2	5526	2210
182.3	277	2.2	8.06	S082	132MS4	13137	3753
182.3	277	3.1	8.06	S102	132MS4	16374	4678
180.0	270	1.2	16.16	S062	112MB2	5536	2214
179.8	280	2.1	8.06	S082	132S4	13188	3768
179.8	280	3.0	8.06	S102	132S4	16442	4698
171.4	284	3.4	17.21	S102	132S2	16708	4774
170.6	285	2.0	17.29	S082	132S2	13421	3834
169.1	288	3.4	17.21	S102	112MB2	16776	4793
169.1	288	3.4	17.21	S102	132SA2	16776	4793
168.3	289	2.0	17.29	S082	112MB2	13472	3849
168.3	289	2.0	17.29	S082	132SA2	13472	3849
166.2	303	3.0	8.85	S102	132MS4	16836	4810
163.9	308	2.9	8.85	S102	132S4	16905	4830
155.3	313	3.4	19.00	S102	132S2	17209	4917
155.0	314	1.8	19.03	S082	132S2	13786	3939
153.2	318	3.3	19.00	S102	112MB2	17280	4937
153.2	318	3.3	19.00	S102	132SA2	17280	4937
152.9	318	1.8	19.03	S082	112MB2	13839	3954
152.9	318	1.8	19.03	S082	132SA2	13839	3954
150.9	322	1.0	19.29	S062	112MB2	5640	2256
148.8	327	1.1	19.55	S062	112MB2	5647	2259
147.8	341	1.9	9.94	S082	132MS4	13931	3980
146.5	332	1.7	20.14	S082	132S2	14006	4002
145.8	346	1.9	9.94	S082	132S4	13984	3995
144.5	337	1.7	20.14	S082	112MB2	14059	4017
144.5	337	1.7	20.14	S082	132SA2	14059	4017
141.6	344	3.1	20.83	S102	132S2	17686	5053
139.7	348	3.0	20.83	S102	112MB2	17758	5074
139.7	348	3.0	20.83	S102	132SA2	17758	5074
135.1	373	2.5	10.88	S102	132MS4	17902	5115
133.3	365	1.6	22.13	S082	132S2	14375	4107
133.3	365	2.9	22.13	S102	132S2	18004	5144
133.2	379	2.5	10.88	S102	132S4	17975	5136
131.5	370	1.6	22.13	S082	112MB2	14428	4122

5.1 S MOTORREDUCTORES (50Hz)

5.50 kW

n2 [rpm]	M2 [Nm]	fs	i	Reductor	Motor	Fr2 D [N]	Fr2 C-L [N]
131.5	370	1.6	22.13	S082	132SA2	14428	4122
131.5	370	2.8	22.13	S102	112MB2	18077	5165
131.5	370	2.8	22.13	S102	132SA2	18077	5165
131.2	388	3.8	7.32	S142	132MB6	35000	18500
130.8	389	1.5	7.34	S082	132MB6	14393	4112
126.7	398	1.8	11.61	S082	132MS4	14532	4152
124.9	404	1.7	11.61	S082	132S4	14585	4167
122.9	396	1.5	24.00	S082	132S2	14697	4199
121.5	400	2.8	24.28	S102	132S2	18502	5286
121.3	401	1.5	24.00	S082	112MB2	14751	4215
121.3	401	1.5	24.00	S082	132SA2	14751	4215
119.9	406	2.8	24.28	S102	112MB2	18576	5307
119.9	406	2.8	24.28	S102	132SA2	18576	5307
119.1	428	1.5	8.06	S082	132MB6	14761	4217
119.1	428	2.1	8.06	S102	132MB6	18562	5304
117.0	435	3.8	8.21	S142	132MB6	35000	18500
115.3	437	1.7	12.75	S082	132MS4	14902	4258
115.3	437	2.3	12.75	S102	132MS4	18748	5357
113.7	443	1.7	12.75	S082	132S4	14956	4273
113.7	443	2.3	12.75	S102	132S4	18822	5378
113.3	430	1.4	26.05	S082	132S2	15024	4292
112.0	434	2.6	26.33	S102	132S2	18945	5413
111.7	436	1.4	26.05	S082	112MB2	15079	4308
111.7	436	1.4	26.05	S082	132SA2	15079	4308
110.5	440	2.6	26.33	S102	112MB2	19020	5434
110.5	440	2.6	26.33	S102	132SA2	19020	5434
108.5	469	2.0	8.85	S102	132MB6	19066	5447
108.1	450	1.5	27.29	S082	132S2	15211	4346
106.6	456	1.5	27.29	S082	112MB2	15266	4362
106.6	456	1.5	27.29	S082	132SA2	15266	4362
105.1	480	2.5	13.99	S102	132MS4	19256	5502
104.7	482	1.6	14.04	S082	132MS4	15286	4367
103.6	486	2.5	13.99	S102	132S4	19331	5523
103.4	493	3.8	9.29	S142	132MB6	35000	18500
103.2	488	1.6	14.04	S082	132S4	15340	4383
103.0	490	3.6	14.27	S142	132MS4	35000	18500
102.9	473	1.4	28.67	S082	132S2	15411	4403
101.6	496	3.6	14.27	S142	132S4	35000	18500
101.5	479	1.4	28.67	S082	112MB2	15466	4419
101.5	479	1.4	28.67	S082	132SA2	15466	4419
99.7	488	1.4	29.60	S082	132S2	15539	4440
98.8	493	2.3	29.87	S102	132S2	19646	5613
98.3	495	1.4	29.60	S082	112MB2	15595	4456
98.3	495	1.4	29.60	S082	132SA2	15595	4456
97.4	499	2.3	29.87	S102	112MB2	19723	5635

5.1 S MOTORREDUCTORES (50Hz)

5.50 kW

n2 [rpm]	M2 [Nm]	fs	i	Reductor	Motor	Fr2 D [N]	Fr2 C-L [N]
97.4	499	2.3	29.87	S102	132SA2	19723	5635
96.8	526	3.8	9.91	S142	132MB6	35000	18500
96.5	528	1.3	9.94	S082	132MB6	15591	4455
95.3	529	1.5	15.43	S082	132MS4	15661	4475
95.3	529	2.4	15.43	S102	132MS4	19801	5657
94.0	537	1.4	15.43	S082	132S4	15716	4490
94.0	537	2.3	15.43	S102	132S4	19878	5679
93.5	539	1.4	15.73	S082	132MS4	15737	4496
92.8	524	1.4	31.78	S082	132S2	15828	4522
92.2	547	1.4	15.73	S082	132S4	15792	4512
91.8	549	3.5	16.01	S142	132MS4	35000	18500
91.6	531	1.4	31.78	S082	112MB2	15883	4538
91.6	531	1.4	31.78	S082	132SA2	15883	4538
91.0	534	2.1	32.40	S102	132S2	20107	5745
90.6	557	3.5	16.01	S142	132S4	35000	18500
89.8	542	2.1	32.40	S102	112MB2	20185	5767
89.8	542	2.1	32.40	S102	132SA2	20185	5767
88.2	577	1.7	10.88	S102	132MB6	20222	5778
85.4	590	2.2	17.21	S102	132MS4	20420	5834
85.0	593	1.3	17.29	S082	132MS4	16119	4605
84.5	576	1.3	34.91	S082	132S2	16211	4632
84.5	576	1.8	34.91	S102	132S2	20535	5867
84.2	599	2.2	17.21	S102	132S4	20499	5857
84.2	605	3.6	11.41	S142	132MB6	35000	18500
83.8	601	1.3	17.29	S082	132S4	16174	4621
83.8	581	3.9	35.20	S122	132S2	29403	8401
83.4	584	1.3	34.91	S082	112MB2	16267	4648
83.4	584	1.3	34.91	S082	132SA2	16267	4648
83.4	584	1.8	34.91	S102	112MB2	20614	5890
83.4	584	1.8	34.91	S102	132SA2	20614	5890
82.7	616	1.2	11.61	S082	132MB6	16208	4631
82.7	589	3.8	35.20	S122	112MB2	29516	8433
82.7	589	3.8	35.20	S122	132SA2	29516	8433
82.0	594	1.3	35.50	S082	112MB2	16335	4667
81.2	621	3.5	18.11	S142	132MS4	35000	18500
80.1	630	3.5	18.11	S142	132S4	35000	18500
77.4	652	2.1	19.00	S102	132MS4	20989	5997
77.3	653	1.2	19.03	S082	132MS4	16502	4715
77.0	632	1.8	38.30	S102	132S2	21075	6021
76.3	661	2.1	19.00	S102	132S4	21068	6020
76.2	662	1.2	19.03	S082	132S4	16557	4731
76.0	640	1.8	38.30	S102	112MB2	21155	6044
76.0	640	1.8	38.30	S102	132SA2	21155	6044
76.0	663	3.5	19.33	S142	132MS4	35000	18500
75.3	676	1.2	12.75	S082	132MB6	16583	4738

5.1 S MOTORREDUCTORES (50Hz)

5.50 kW

n2 [rpm]	M2 [Nm]	fs	i	Reductor	Motor	Fr2 D [N]	Fr2 C-L [N]
75.3	676	1.6	12.75	S102	132MB6	21129	6037
75.0	672	3.5	19.33	S142	132S4	35000	18500
74.9	680	3.0	12.81	S142	132MB6	35000	18500
73.0	691	1.1	20.14	S082	132MS4	16730	4780
72.7	670	1.1	40.05	S082	112MB2	16828	4808
72.0	700	1.1	20.14	S082	132S4	16784	4796
71.8	677	3.3	41.07	S122	132S2	30000	8767
70.9	687	3.3	41.07	S122	112MB2	30000	8800
70.9	687	3.3	41.07	S122	132SA2	30000	8800
70.6	714	2.0	20.83	S102	132MS4	21524	6150
69.6	724	1.9	20.83	S102	132S4	21605	6173
69.4	701	1.5	42.53	S102	132S2	21691	6198
69.2	729	3.8	21.25	S122	132MS4	30000	8831
68.6	742	1.7	13.99	S102	132MB6	21670	6191
68.5	710	1.1	43.05	S082	132S2	17067	4876
68.4	745	1.1	14.04	S082	132MB6	16967	4848
68.4	711	1.5	42.53	S102	112MB2	21773	6221
68.4	711	1.5	42.53	S102	132SA2	21773	6221
68.2	739	3.8	21.25	S122	132S4	30000	8863
67.7	719	3.1	43.60	S122	132S2	30000	8912
67.6	720	1.0	43.05	S082	112MB2	17122	4892
67.6	720	1.0	43.05	S082	132SA2	17122	4892
67.3	757	2.5	14.27	S142	132MB6	35000	18500
66.7	729	3.1	43.60	S122	112MB2	30000	8945
66.7	729	3.1	43.60	S122	132SA2	30000	8945
66.4	759	1.1	22.13	S082	132MS4	17105	4887
66.4	759	1.8	22.13	S102	132MS4	21879	6251
66.1	736	1.3	44.00	S102	112MB2	21976	6279
66.1	736	2.4	44.63	S122	132S2	30000	8968
66.1	763	3.2	22.24	S142	132MS4	35000	18500
65.7	767	3.6	22.37	S122	132MS4	30000	8953
65.5	769	1.0	22.13	S082	132S4	17159	4903
65.5	769	1.8	22.13	S102	132S4	21960	6274
65.2	746	2.4	44.63	S122	112MB2	30000	9001
65.2	746	2.4	44.63	S122	132SA2	30000	9001
65.2	774	3.1	22.24	S142	132S4	35000	18500
64.8	778	3.6	22.37	S122	132S4	30000	8986
63.1	799	3.6	23.29	S122	132MS4	30000	9050
62.6	777	1.5	47.13	S102	132S2	22000	6373
62.3	810	3.6	23.29	S122	132S4	30000	9083
62.2	818	1.0	15.43	S082	132MB6	17338	4954
62.2	818	1.6	15.43	S102	132MB6	22000	6356
61.7	788	1.5	47.13	S102	112MB2	22000	6396
61.7	788	1.5	47.13	S102	132SA2	22000	6396
61.3	823	1.0	24.00	S082	132MS4	17427	4979

5.1 S MOTORREDUCTORES (50Hz)

5.50 kW

n2 [rpm]	M2 [Nm]	fs	i	Reductor	Motor	Fr2 D [N]	Fr2 C-L [N]
61.0	834	1.0	15.73	S082	132MB6	17412	4975
60.6	833	1.8	24.28	S102	132MS4	22000	6408
60.4	835	1.0	24.00	S082	132S4	17481	4994
60.2	809	2.2	49.04	S122	132S2	30000	9198
60.0	849	2.4	16.01	S142	132MB6	35000	18500
59.7	844	1.8	24.28	S102	132S4	22000	6432
59.3	820	2.2	49.04	S122	112MB2	30000	9231
59.3	820	2.2	49.04	S122	132SA2	30000	9231
58.2	866	2.4	25.26	S142	132MS4	35000	18500
57.9	840	1.2	50.25	S102	112MB2	22000	6507
57.4	878	2.4	25.26	S142	132S4	35000	18500
56.2	897	3.3	26.15	S122	132MS4	30000	9331
55.8	913	1.5	17.21	S102	132MB6	22000	6542
55.8	903	1.7	26.33	S102	132MS4	22000	6547
55.4	910	3.3	26.15	S122	132S4	30000	9364
55.1	916	1.6	26.33	S102	132S4	22000	6571
54.9	887	2.2	53.75	S122	132S2	30000	9423
54.1	899	2.2	53.75	S122	112MB2	30000	9457
54.1	899	2.2	53.75	S122	132SA2	30000	9457
53.9	936	1.0	27.29	S082	132MS4	17927	5122
53.1	949	0.9	27.29	S082	132S4	17980	5137
53.0	961	2.4	18.11	S142	132MB6	35000	18500
52.8	922	1.1	55.14	S102	112MB2	22000	6668
51.9	972	2.4	28.33	S142	132MS4	35000	18500
51.4	981	3.1	28.60	S122	132MS4	30000	9548
51.3	984	0.9	28.67	S082	132MS4	18000	5176
51.2	985	2.4	28.33	S142	132S4	35000	18500
50.7	995	3.0	28.60	S122	132S4	30000	9582
50.6	997	0.9	28.67	S082	132S4	18000	5191
50.5	1008	1.5	19.00	S102	132MB6	22000	6711
49.7	1026	2.4	19.33	S142	132MB6	35000	18500
49.2	1025	1.5	29.87	S102	132MS4	22000	6764
49.0	993	1.2	59.40	S102	112MB2	22000	6798
48.5	1039	1.4	29.87	S102	132S4	22000	6787
48.2	1047	2.9	30.51	S122	132MS4	30000	9706
47.5	1061	2.8	30.51	S122	132S4	30000	9740
46.3	1090	0.9	31.78	S082	132MS4	18000	5287
46.1	1105	1.3	20.83	S102	132MB6	22000	6869
45.9	1099	2.4	32.05	S142	132MS4	35000	18500
45.6	1105	0.9	31.78	S082	132S4	18000	5301
45.5	1047	1.9	64.84	S123	132S2	30000	9912
45.4	1111	1.3	32.40	S102	132MS4	22000	6904
45.2	1127	2.6	21.25	S122	132MB6	30000	9852
45.2	1115	2.4	32.05	S142	132S4	35000	18500
44.9	1124	2.7	32.76	S122	132MS4	30000	9880

5.1 S MOTORREDUCTORES (50Hz)

5.50 kW

n2 [rpm]	M2 [Nm]	fs	i	Reductor	Motor	Fr2 D [N]	Fr2 C-L [N]
44.9	1062	1.9	64.84	S123	112MB2	30000	9947
44.9	1062	1.9	64.84	S123	132SA2	30000	9947
44.8	1127	1.3	32.40	S102	132S4	22000	6928
44.7	1089	2.1	66.00	S122	132S2	30000	9933
44.3	1139	2.6	32.76	S122	132S4	30000	9913
44.1	1104	2.0	66.00	S122	112MB2	30000	9966
44.1	1104	2.0	66.00	S122	132SA2	30000	9966
44.0	1147	2.6	33.44	S122	132MS4	30000	9931
43.4	1174	1.3	22.13	S102	132MB6	22000	6972
43.4	1163	2.6	33.44	S122	132S4	30000	9964
43.2	1180	2.2	22.24	S142	132MB6	35000	18500
43.0	1174	2.4	34.22	S142	132MS4	35000	18500
42.9	1134	1.1	67.84	S102	112MB2	22000	7031
42.9	1187	2.5	22.37	S122	132MB6	30000	9976
42.4	1190	2.4	34.22	S142	132S4	35000	18500
42.1	1197	1.2	34.91	S102	132MS4	22000	7033
41.8	1207	2.5	35.20	S122	132MS4	30000	10056
41.5	1214	1.2	34.91	S102	132S4	22000	7056
41.5	1148	1.8	71.07	S123	132S2	30000	10143
41.2	1224	2.5	35.20	S122	132S4	30000	10089
41.2	1236	2.5	23.29	S122	132MB6	30000	10075
40.9	1164	1.7	71.07	S123	112MB2	30000	10177
40.9	1164	1.7	71.07	S123	132SA2	30000	10177
39.5	1288	1.2	24.28	S102	132MB6	22000	7132
38.4	1314	1.1	38.30	S102	132MS4	22000	7193
38.0	1340	1.7	25.26	S142	132MB6	35000	18500
37.9	1332	1.1	38.30	S102	132S4	22000	7216
37.6	1267	1.8	78.46	S123	132S2	30000	10392
37.3	1351	3.3	39.38	S142	132MS4	35000	18500
37.1	1285	1.8	78.46	S123	112MB2	30000	10426
37.1	1285	1.8	78.46	S123	132SA2	30000	10426
36.8	1369	3.2	39.38	S142	132S4	35000	18500
36.7	1387	2.3	26.15	S122	132MB6	30000	10355
36.5	1397	1.1	26.33	S102	132MB6	22000	7271
35.8	1409	2.1	41.07	S122	132MS4	30000	10431
35.3	1428	2.1	41.07	S122	132S4	30000	10464
34.6	1459	1.0	42.53	S102	132MS4	22000	7372
34.1	1479	0.9	42.53	S102	132S4	22000	7395
33.9	1503	1.7	28.33	S142	132MB6	35000	18500
33.8	1409	1.6	87.27	S123	132S2	30000	10658
33.7	1495	2.0	43.60	S122	132MS4	30000	10575
33.6	1517	2.1	28.60	S122	132MB6	30000	10570
33.3	1516	2.0	43.60	S122	132S4	30000	10608
33.3	1429	1.6	87.27	S123	112MB2	30000	10692
33.3	1429	1.6	87.27	S123	132SA2	30000	10692

5.1 S MOTORREDUCTORES (50Hz)

5.50 kW

n2 [rpm]	M2 [Nm]	fs	i	Reductor	Motor	Fr2 D [N]	Fr2 C-L [N]
32.9	1531	1.6	44.63	S122	132MS4	30000	10631
32.5	1552	1.5	44.63	S122	132S4	30000	10664
32.1	1585	1.0	29.87	S102	132MB6	22000	7484
32.1	1537	2.6	45.77	S143	132MS4	35000	18500
31.7	1558	2.6	45.77	S143	132S4	35000	18500
31.5	1619	1.9	30.51	S122	132MB6	30000	10724
31.2	1617	1.0	47.13	S102	132MS4	22000	7547
30.8	1639	1.0	47.13	S102	132S4	22000	7570
30.0	1682	1.4	49.04	S122	132MS4	30000	10856
30.0	1700	1.7	32.05	S142	132MB6	35000	18500
29.6	1719	0.9	32.40	S102	132MB6	22000	7620
29.6	1705	1.4	49.04	S122	132S4	30000	10888
29.3	1738	1.8	32.76	S122	132MB6	30000	10890
28.8	1712	2.6	50.97	S143	132MS4	35000	18500
28.7	1774	1.8	33.44	S122	132MB6	30000	10939
28.4	1736	2.6	50.97	S143	132S4	35000	18500
28.1	1815	1.7	34.22	S142	132MB6	35000	18500
27.9	1711	1.3	105.91	S123	132S2	30000	11136
27.5	1734	1.3	105.91	S123	112MB2	30000	11169
27.5	1734	1.3	105.91	S123	132SA2	30000	11169
27.3	1867	1.7	35.20	S122	132MB6	30000	11057
27.3	1844	1.4	53.75	S122	132MS4	30000	11071
27.0	1869	1.4	53.75	S122	132S4	30000	11102
26.2	1817	1.2	112.52	S123	132S2	30000	11200
25.9	1842	1.2	112.52	S123	112MB2	30000	11200
25.9	1842	1.2	112.52	S123	132SA2	30000	11200
25.7	1920	2.5	57.17	S143	132MS4	35000	18500
25.4	1947	2.4	57.17	S143	132S4	35000	18500
24.4	2089	2.2	39.38	S142	132MB6	35000	18500
23.9	1992	1.1	123.33	S123	132S2	30000	11200
23.9	2083	3.2	40.10	S153	132MB6	40000	19400
23.6	2019	1.1	123.33	S123	112MB2	30000	11200
23.6	2019	1.1	123.33	S123	132SA2	30000	11200
23.4	2179	1.4	41.07	S122	132MB6	30000	11200
22.7	2178	1.2	64.84	S123	132MS4	30000	11200
22.7	2100	1.1	130.04	S123	132S2	30000	11200
22.7	2172	2.2	64.68	S143	132MS4	35000	18500
22.4	2208	1.2	64.84	S123	132S4	30000	11200
22.4	2129	1.1	130.04	S123	112MB2	30000	11200
22.4	2129	1.1	130.04	S123	132SA2	30000	11200
22.4	2202	2.2	64.68	S143	132S4	35000	18500
22.3	2264	1.3	66.00	S122	132MS4	30000	11200
22.1	2161	1.0	133.78	S123	132S2	30000	11200
22.0	2313	1.4	43.60	S122	132MB6	30000	11200
22.0	2295	1.3	66.00	S122	132S4	30000	11200

5.1 S MOTORREDUCTORES (50Hz)

5.50 kW

n2 [rpm]	M2 [Nm]	fs	i	Reductor	Motor	Fr2 D [N]	Fr2 C-L [N]
21.8	2190	1.0	133.78	S123	112MB2	30000	11200
21.8	2190	1.0	133.78	S123	132SA2	30000	11200
21.5	2368	1.1	44.63	S122	132MB6	30000	11200
21.4	2325	3.2	44.76	S153	132MB6	40000	19400
21.3	2319	2.1	69.06	S143	132MS4	35000	18500
21.0	2377	1.8	45.77	S143	132MB6	35000	18500
21.0	2351	2.1	69.06	S143	132S4	35000	18500
20.7	2387	1.1	71.07	S123	132MS4	30000	11200
20.4	2420	1.1	71.07	S123	132S4	30000	11200
20.0	2473	3.1	73.63	S153	132MS4	40000	19400
19.7	2507	3.1	73.63	S153	132S4	40000	19400
19.6	2602	1.0	49.04	S122	132MB6	30000	11200
18.8	2648	1.8	50.97	S143	132MB6	35000	18500
18.7	2635	1.1	78.46	S123	132MS4	30000	11200
18.7	2669	3.1	51.38	S153	132MB6	40000	19400
18.5	2672	1.1	78.46	S123	132S4	30000	11200
18.5	2669	1.6	79.45	S143	132MS4	35000	18500
18.2	2705	1.6	79.45	S143	132S4	35000	18500
17.9	2851	1.0	53.75	S122	132MB6	30000	11200
17.0	2929	3.0	56.39	S153	132MB6	40000	19400
16.9	2927	2.4	87.16	S153	132MS4	40000	19400
16.8	2931	1.0	87.27	S123	132MS4	30000	11200
16.8	2970	1.7	57.17	S143	132MB6	35000	18500
16.6	2971	1.0	87.27	S123	132S4	30000	11200
16.6	2968	2.4	87.16	S153	132S4	40000	19400
15.1	3267	2.4	97.27	S153	132MS4	40000	19400
15.0	3327	2.8	64.05	S153	132MB6	40000	19400
14.9	3319	1.3	98.81	S143	132MS4	35000	18500
14.9	3312	2.4	97.27	S153	132S4	40000	19400
14.8	3360	1.5	64.68	S143	132MB6	35000	18500
14.7	3465	0.9	66.00	S122	132MB6	30000	11200
14.7	3365	1.3	98.81	S143	132S4	35000	18500
13.9	3587	1.4	69.06	S143	132MB6	35000	18500
13.4	3696	1.3	110.05	S143	132MS4	35000	18500
13.2	3747	1.3	110.05	S143	132S4	35000	18500
13.2	3751	2.4	111.67	S153	132MS4	40000	19400
13.0	3824	2.1	73.63	S153	132MB6	40000	19400
13.0	3802	2.4	111.67	S153	132S4	40000	19400
12.1	4127	1.1	79.45	S143	132MB6	35000	18500
12.0	4117	2.3	122.57	S153	132MS4	40000	19400
11.9	4146	1.1	123.44	S143	132MS4	35000	18500
11.8	4173	2.3	122.57	S153	132S4	40000	19400
11.7	4203	1.1	123.44	S143	132S4	35000	18500
11.0	4527	1.6	87.16	S153	132MB6	40000	19400
10.6	4676	2.0	139.21	S153	132MS4	40000	19400

5.1 S MOTORREDUCTORES (50Hz)

5.50 kW

n2 [rpm]	M2 [Nm]	fs	i	Reductor	Motor	Fr2 D [N]	Fr2 C-L [N]
10.5	4690	1.0	139.64	S143	132MS4	35000	18500
10.4	4755	1.0	139.64	S143	132S4	35000	18500
10.4	4740	1.9	139.21	S153	132S4	40000	19400
9.9	5008	1.0	149.10	S143	132MS4	35000	18500
9.9	5053	1.6	97.27	S153	132MB6	40000	19400
9.7	5133	0.9	98.81	S143	132MB6	35000	18500
9.7	5077	0.9	149.10	S143	132S4	35000	18500
9.5	5173	1.4	154.02	S153	132MS4	40000	19400
9.4	5244	1.4	154.02	S153	132S4	40000	19400
9.2	5375	1.5	160.02	S153	132MS4	40000	19400
9.1	5449	1.5	160.02	S153	132S4	40000	19400
8.6	5801	1.6	111.67	S153	132MB6	40000	19400
8.3	5939	1.4	176.81	S153	132MS4	40000	19400
8.2	6021	1.4	176.81	S153	132S4	40000	19400
7.8	6367	1.6	122.57	S153	132MB6	40000	19400
7.6	6518	1.4	194.06	S153	132MS4	40000	19400
7.5	6608	1.4	194.06	S153	132S4	40000	19400
6.9	7231	1.3	139.21	S153	132MB6	40000	19400
6.7	7403	1.3	220.42	S153	132MS4	40000	19400
6.6	7505	1.2	220.42	S153	132S4	40000	19400
6.2	8000	0.9	154.02	S153	132MB6	40000	19400
6.0	8312	1.0	160.02	S153	132MB6	40000	19400
5.8	8510	1.0	253.36	S153	132MS4	40000	19400
5.7	8627	1.0	253.36	S153	132S4	40000	19400
5.4	9185	0.9	176.81	S153	132MB6	40000	19400
4.9	10081	0.9	194.06	S153	132MB6	40000	19400

7.50 kW

n2 [rpm]	M2 [Nm]	fs	i	Reductor	Motor	Fr2 D [N]	Fr2 C-L [N]
402.0	165	2.5	7.34	S082	132M2	10278	2937
396.5	167	2.5	7.34	S082	132SB2	10319	2948
365.9	181	2.5	8.06	S082	132M2	10565	3019
365.9	181	3.5	8.06	S102	132M2	13111	3746
360.9	184	2.4	8.06	S082	132SB2	10608	3031
360.9	184	3.5	8.06	S102	132SB2	13166	3762
333.5	199	3.4	8.85	S102	132M2	13488	3854
328.9	202	3.3	8.85	S102	132SB2	13544	3870
296.7	224	2.2	9.94	S082	132M2	11226	3207
292.6	227	2.2	9.94	S082	132SB2	11270	3220
271.0	245	2.9	10.88	S102	132M2	14361	4103
267.4	248	2.9	10.88	S102	132SB2	14420	4120
254.2	261	2.0	11.61	S082	132M2	11729	3351
250.7	265	2.0	11.61	S082	132SB2	11774	3364

5.1 S MOTORREDUCTORES (50Hz)

7.50 kW

n2 [rpm]	M2 [Nm]	fs	i	Reductor	Motor	Fr2 D [N]	Fr2 C-L [N]
231.4	287	2.0	12.75	S082	132M2	12041	3440
231.4	287	2.6	12.75	S102	132M2	15056	4302
228.2	291	1.9	12.75	S082	132SB2	12087	3453
228.2	291	2.6	12.75	S102	132SB2	15117	4319
210.9	315	2.9	13.99	S102	132M2	15474	4421
210.1	316	1.8	14.04	S082	132M2	12367	3533
208.0	319	2.8	13.99	S102	132SB2	15537	4439
207.2	320	1.8	14.04	S082	132SB2	12413	3547
198.9	346	1.6	7.34	S082	132M4	12511	3575
197.6	348	1.6	7.34	S082	132MA4	12535	3581
191.2	347	1.7	15.43	S082	132M2	12687	3625
191.2	347	2.7	15.43	S102	132M2	15925	4550
188.6	352	1.6	15.43	S082	132SB2	12733	3638
188.6	352	2.7	15.43	S102	132SB2	15989	4568
187.6	354	1.6	15.73	S082	132M2	12752	3643
185.1	359	1.6	15.73	S082	132SB2	12799	3657
181.1	380	1.6	8.06	S082	132M4	12830	3666
181.1	380	2.2	8.06	S102	132M4	16145	4613
179.8	382	1.6	8.06	S082	132MA4	12853	3672
179.8	382	2.2	8.06	S102	132MA4	16177	4622
171.4	387	2.5	17.21	S102	132M2	16440	4697
170.6	389	1.5	17.29	S082	132M2	13080	3737
169.1	392	2.5	17.21	S102	132SB2	16505	4716
168.3	394	1.5	17.29	S082	132SB2	13127	3751
165.0	417	2.2	8.85	S102	132M4	16582	4738
163.9	420	2.1	8.85	S102	132MA4	16615	4747
155.3	427	2.5	19.00	S102	132M2	16914	4832
155.0	428	1.3	19.03	S082	132M2	13411	3832
153.2	433	2.4	19.00	S102	132SB2	16980	4851
152.9	434	1.3	19.03	S082	132SB2	13459	3845
146.8	468	1.4	9.94	S082	132M4	13547	3871
146.5	453	1.3	20.14	S082	132M2	13609	3888
145.8	472	1.4	9.94	S082	132MA4	13571	3877
144.5	459	1.3	20.14	S082	132SB2	13657	3902
141.6	468	2.2	20.83	S102	132M2	17362	4961
139.7	475	2.2	20.83	S102	132SB2	17429	4980
134.1	513	1.9	10.88	S102	132M4	17584	5024
133.3	498	1.2	22.13	S082	132M2	13939	3982
133.3	498	2.1	22.13	S102	132M2	17660	5046
133.2	516	1.8	10.88	S102	132MA4	17617	5034
132.6	524	3.8	7.32	S142	160M6	35000	18500
131.5	504	1.2	22.13	S082	132SB2	13986	3996
131.5	504	2.1	22.13	S102	132SB2	17728	5065
128.0	537	3.8	11.41	S142	132M4	35000	18500
127.1	541	3.8	11.41	S142	132MA4	35000	18500

5.1 S MOTORREDUCTORES (50Hz)

7.50 kW

n2 [rpm]	M2 [Nm]	fs	i	Reductor	Motor	Fr2 D [N]	Fr2 C-L [N]
125.8	547	1.3	11.61	S082	132M4	14080	4023
124.9	550	1.3	11.61	S082	132MA4	14103	4029
122.9	540	1.1	24.00	S082	132M2	14224	4064
121.5	546	2.1	24.28	S102	132M2	18124	5178
121.3	547	1.1	24.00	S082	132SB2	14272	4078
120.3	577	1.5	8.06	S102	160M6	18107	5174
119.9	554	2.0	24.28	S102	132SB2	18192	5198
118.2	588	3.8	8.21	S142	160M6	35000	18500
114.5	600	1.2	12.75	S082	132M4	14403	4115
114.5	600	1.7	12.75	S102	132M4	18369	5248
114.4	607	2.6	8.48	S122	160M6	26221	7492
113.9	603	3.2	12.81	S142	132M4	35000	18500
113.7	605	1.2	12.75	S082	132MA4	14426	4122
113.7	605	1.7	12.75	S102	132MA4	18404	5258
113.3	586	1.0	26.05	S082	132M2	14510	4146
113.2	608	3.1	12.81	S142	132MA4	35000	18500
112.8	588	3.8	26.15	S122	132M2	26423	7549
112.0	592	1.9	26.33	S102	132M2	18535	5296
111.7	594	1.0	26.05	S082	132SB2	14558	4159
111.3	596	3.8	26.15	S122	132SB2	26522	7578
110.5	600	1.9	26.33	S102	132SB2	18605	5316
109.6	633	1.5	8.85	S102	160M6	18571	5306
108.1	614	1.1	27.29	S082	132M2	14673	4192
106.6	622	1.1	27.29	S082	132SB2	14721	4206
104.5	665	3.8	9.29	S142	160M6	35000	18500
104.4	659	1.8	13.99	S102	132M4	18837	5382
104.3	666	2.7	9.30	S122	160M6	26877	7679
104.0	661	1.1	14.04	S082	132M4	14733	4210
103.6	663	1.8	13.99	S102	132MA4	18872	5392
103.2	666	1.1	14.04	S082	132MA4	14757	4216
103.1	643	3.5	28.60	S122	132M2	27073	7735
102.9	645	1.0	28.67	S082	132M2	14846	4242
102.3	672	2.7	14.27	S142	132M4	35000	18500
101.7	652	3.5	28.60	S122	132SB2	27173	7764
101.6	677	2.6	14.27	S142	132MA4	35000	18500
101.5	654	1.0	28.67	S082	132SB2	14893	4255
99.7	666	1.0	29.60	S082	132M2	14956	4273
98.8	672	1.7	29.87	S102	132M2	19181	5480
98.3	675	1.0	29.60	S082	132SB2	15004	4287
97.8	710	3.8	9.91	S142	160M6	35000	18500
97.4	681	1.7	29.87	S102	132SB2	19251	5500
96.7	686	3.3	30.51	S122	132M2	27547	7871
95.4	696	3.2	30.51	S122	132SB2	27647	7899
94.7	733	2.4	10.24	S122	160M6	27572	7878
94.6	727	1.1	15.43	S082	132M4	15052	4301

5.1 S MOTORREDUCTORES (50Hz)

7.50 kW

n2 [rpm]	M2 [Nm]	fs	i	Reductor	Motor	Fr2 D [N]	Fr2 C-L [N]
94.6	727	1.7	15.43	S102	132M4	19336	5525
94.0	732	1.1	15.43	S082	132MA4	15075	4307
94.0	732	1.7	15.43	S102	132MA4	19371	5535
92.8	741	1.0	15.73	S082	132M4	15116	4319
92.8	715	1.0	31.78	S082	132M2	15202	4343
92.2	746	1.0	15.73	S082	132MA4	15139	4325
91.6	725	1.0	31.78	S082	132SB2	15248	4357
91.2	754	2.6	16.01	S142	132M4	35000	18500
91.0	729	1.5	32.40	S102	132M2	19602	5601
90.6	759	2.6	16.01	S142	132MA4	35000	18500
90.1	737	3.1	32.76	S122	132M2	28070	8020
89.8	739	1.5	32.40	S102	132SB2	19674	5621
89.1	779	1.3	10.88	S102	160M6	19624	5607
88.8	747	3.0	32.76	S122	132SB2	28171	8049
88.2	752	3.0	33.44	S122	132M2	28224	8064
87.0	763	3.0	33.44	S122	132SB2	28325	8093
85.0	817	2.4	11.42	S122	160M6	28363	8104
85.0	817	3.6	11.41	S142	160M6	35000	18500
84.8	811	1.6	17.21	S102	132M4	19898	5685
84.5	785	1.3	34.91	S102	132M2	19992	5712
84.4	815	0.9	17.29	S082	132M4	15433	4409
84.2	816	1.6	17.21	S102	132MA4	19934	5695
83.8	820	0.9	17.29	S082	132MA4	15456	4416
83.8	792	2.8	35.20	S122	132M2	28603	8172
83.4	796	1.3	34.91	S102	132SB2	20063	5732
82.7	803	2.8	35.20	S122	132SB2	28705	8201
80.6	853	2.6	18.11	S142	132M4	35000	18500
80.1	859	2.6	18.11	S142	132MA4	35000	18500
77.8	892	3.9	12.46	S152	160M6	40000	19400
77.0	862	1.3	38.30	S102	132M2	20478	5851
76.8	895	1.6	19.00	S102	132M4	20409	5831
76.8	904	2.6	12.63	S122	160M6	29098	8314
76.3	901	1.6	19.00	S102	132MA4	20445	5841
76.1	913	1.2	12.75	S102	160M6	20437	5839
76.0	873	1.3	38.30	S102	132SB2	20550	5871
75.7	917	3.0	12.81	S142	160M6	35000	18500
75.5	911	2.6	19.33	S142	132M4	35000	18500
75.0	917	2.6	19.33	S142	132MA4	35000	18500
71.8	924	2.4	41.07	S122	132M2	29753	8501
70.9	936	2.4	41.07	S122	132SB2	29855	8530
70.1	981	1.4	20.83	S102	132M4	20885	5967
70.1	991	2.5	13.84	S122	160M6	29769	8505
69.7	996	3.9	13.91	S152	160M6	40000	19400
69.6	988	1.4	20.83	S102	132MA4	20921	5977
69.4	957	1.1	42.53	S102	132M2	21029	6008

5.1 S MOTORREDUCTORES (50Hz)

7.50 kW

n2 [rpm]	M2 [Nm]	fs	i	Reductor	Motor	Fr2 D [N]	Fr2 C-L [N]
69.3	1002	1.3	13.99	S102	160M6	20916	5976
68.7	1001	2.8	21.25	S122	132M4	29953	8558
68.4	970	1.1	42.53	S102	132SB2	21101	6029
68.2	1008	2.8	21.25	S122	132MA4	30000	8572
68.0	1022	2.5	14.27	S142	160M6	35000	18500
67.7	981	2.3	43.60	S122	132M2	30000	8628
66.7	994	2.3	43.60	S122	132SB2	30000	8658
66.1	1004	1.8	44.63	S122	132M2	30000	8678
66.0	1042	1.3	22.13	S102	132M4	21199	6057
65.6	1048	2.3	22.24	S142	132M4	35000	18500
65.5	1049	1.3	22.13	S102	132MA4	21234	6067
65.3	1053	2.7	22.37	S122	132M4	30000	8665
65.2	1018	1.8	44.63	S122	132SB2	30000	8708
65.2	1055	2.3	22.24	S142	132MA4	35000	18500
64.8	1061	2.6	22.37	S122	132MA4	30000	8680
62.7	1097	2.6	23.29	S122	132M4	30000	8750
62.6	1060	1.1	47.13	S102	132M2	21572	6163
62.3	1105	2.6	23.29	S122	132MA4	30000	8765
61.7	1075	1.1	47.13	S102	132SB2	21644	6184
60.7	1143	3.9	15.97	S152	160M6	40000	19400
60.6	1146	2.4	16.01	S142	160M6	35000	18500
60.2	1103	1.6	49.04	S122	132M2	30000	8879
60.1	1143	1.3	24.28	S102	132M4	21679	6194
59.7	1151	1.3	24.28	S102	132MA4	21714	6204
59.3	1118	1.6	49.04	S122	132SB2	30000	8909
57.8	1190	1.8	25.26	S142	132M4	35000	18500
57.4	1198	1.8	25.26	S142	132MA4	35000	18500
57.1	1217	2.2	16.99	S122	160M6	30000	8932
56.4	1232	1.1	17.21	S102	160M6	21982	6281
55.8	1232	2.4	26.15	S122	132M4	30000	8992
55.4	1240	1.2	26.33	S102	132M4	22000	6314
55.4	1240	2.4	26.15	S122	132MA4	30000	9006
55.3	1255	3.9	17.53	S152	160M6	40000	19400
55.1	1249	1.2	26.33	S102	132MA4	22000	6324
54.9	1209	1.6	53.75	S122	132M2	30000	9074
54.1	1226	1.6	53.75	S122	132SB2	30000	9103
53.6	1296	2.4	18.11	S142	160M6	35000	18500
51.5	1334	1.8	28.33	S142	132M4	35000	18500
51.2	1344	1.8	28.33	S142	132MA4	35000	18500
51.0	1347	2.2	28.60	S122	132M4	30000	9176
50.7	1356	2.2	28.60	S122	132MA4	30000	9190
50.2	1384	2.4	19.33	S142	160M6	35000	18500
48.9	1407	1.1	29.87	S102	132M4	22000	6497
48.7	1425	3.9	19.91	S152	160M6	40000	19400
48.5	1416	1.1	29.87	S102	132MA4	22000	6507

5.1 S MOTORREDUCTORES (50Hz)

7.50 kW

n2 [rpm]	M2 [Nm]	fs	i	Reductor	Motor	Fr2 D [N]	Fr2 C-L [N]
47.8	1437	2.1	30.51	S122	132M4	30000	9308
47.5	1447	2.1	30.51	S122	132MA4	30000	9322
45.6	1521	1.9	21.25	S122	160M6	30000	9387
45.6	1510	1.8	32.05	S142	132M4	35000	18500
45.5	1428	1.4	64.84	S123	132M2	30000	9500
45.2	1520	1.8	32.05	S142	132MA4	35000	18500
45.1	1526	1.0	32.40	S102	132M4	22000	6614
44.9	1448	1.4	64.84	S123	132SB2	30000	9529
44.8	1536	1.0	32.40	S102	132MA4	22000	6624
44.7	1485	1.5	66.00	S122	132M2	30000	9504
44.6	1543	1.9	32.76	S122	132M4	30000	9451
44.3	1553	1.9	32.76	S122	132MA4	30000	9465
44.1	1505	1.5	66.00	S122	132SB2	30000	9532
43.7	1575	1.9	33.44	S122	132M4	30000	9493
43.6	1593	2.2	22.24	S142	160M6	35000	18500
43.4	1586	1.9	33.44	S122	132MA4	30000	9507
43.4	1601	1.8	22.37	S122	160M6	30000	9489
42.7	1612	1.8	34.22	S142	132M4	35000	18500
42.4	1623	1.8	34.22	S142	132MA4	35000	18500
42.4	1638	3.9	22.88	S152	160M6	40000	19400
41.6	1668	1.8	23.29	S122	160M6	30000	9568
41.5	1658	1.8	35.20	S122	132M4	30000	9594
41.5	1565	1.3	71.07	S123	132M2	30000	9691
41.2	1669	1.8	35.20	S122	132MA4	30000	9608
40.9	1587	1.3	71.07	S123	132SB2	30000	9719
38.4	1809	1.7	25.26	S142	160M6	35000	18500
37.6	1728	1.3	78.46	S123	132M2	30000	9893
37.1	1872	1.7	26.15	S122	160M6	30000	9790
37.1	1752	1.3	78.46	S123	132SB2	30000	9920
37.1	1854	2.4	39.38	S142	132M4	35000	18500
36.8	1867	2.4	39.38	S142	132MA4	35000	18500
36.4	1849	3.4	40.10	S153	132M4	40000	19400
36.2	1862	3.4	40.10	S153	132MA4	40000	19400
35.8	1941	3.3	27.11	S152	160M6	40000	19400
35.6	1934	1.6	41.07	S122	132M4	30000	9889
35.3	1947	1.5	41.07	S122	132MA4	30000	9902
34.2	2029	1.7	28.33	S142	160M6	35000	18500
33.9	2048	1.5	28.60	S122	160M6	30000	9954
33.8	1922	1.2	87.27	S123	132M2	30000	10103
33.5	2053	1.5	43.60	S122	132M4	30000	9999
33.3	2067	1.5	43.60	S122	132MA4	30000	10012
33.3	1948	1.2	87.27	S123	132SB2	30000	10130
32.7	2102	1.1	44.63	S122	132M4	30000	10041
32.6	2130	3.3	29.75	S152	160M6	40000	19400
32.6	2064	3.4	44.76	S153	132M4	40000	19400

5.1 S MOTORREDUCTORES (50Hz)

7.50 kW

n2 [rpm]	M2 [Nm]	fs	i	Reductor	Motor	Fr2 D [N]	Fr2 C-L [N]
32.5	2116	1.1	44.63	S122	132MA4	30000	10053
32.4	2078	3.4	44.76	S153	132MA4	40000	19400
31.9	2110	1.9	45.77	S143	132M4	35000	18500
31.8	2185	1.4	30.51	S122	160M6	30000	10069
31.7	2125	1.9	45.77	S143	132MA4	35000	18500
30.3	2295	1.7	32.05	S142	160M6	35000	18500
29.8	2310	1.0	49.04	S122	132M4	30000	10205
29.6	2345	1.3	32.76	S122	160M6	30000	10189
29.6	2325	1.0	49.04	S122	132MA4	30000	10217
29.0	2394	1.3	33.44	S122	160M6	30000	10224
28.7	2419	3.3	33.79	S152	160M6	40000	19400
28.6	2351	1.9	50.97	S143	132M4	35000	18500
28.4	2367	1.9	50.97	S143	132MA4	35000	18500
28.4	2369	3.3	51.38	S153	132M4	40000	19400
28.3	2450	1.7	34.22	S142	160M6	35000	18500
28.2	2386	3.3	51.38	S153	132MA4	40000	19400
27.6	2520	1.2	35.20	S122	160M6	30000	10306
27.2	2531	1.0	53.75	S122	132M4	30000	10356
27.0	2549	1.0	53.75	S122	132MA4	30000	10367
25.9	2601	3.2	56.39	S153	132M4	40000	19400
25.7	2619	3.2	56.39	S153	132MA4	40000	19400
25.5	2636	1.8	57.17	S143	132M4	35000	18500
25.4	2655	1.8	57.17	S143	132MA4	35000	18500
25.0	2781	2.9	38.84	S152	160M6	40000	19400
24.6	2819	1.7	39.38	S142	160M6	35000	18500
24.2	2811	2.3	40.10	S153	160M6	40000	19400
23.6	2940	1.1	41.07	S122	160M6	30000	10531
22.8	2954	3.0	64.05	S153	132M4	40000	19400
22.6	2983	1.6	64.68	S143	132M4	35000	18500
22.6	2974	3.0	64.05	S153	132MA4	40000	19400
22.5	2990	0.9	64.84	S123	132MA4	30000	10696
22.5	2990	0.9	64.84	S123	132M4	30000	10696
22.4	3003	1.6	64.68	S143	132MA4	35000	18500
22.1	3108	1.0	66.00	S122	132M4	30000	10649
22.0	3130	1.0	66.00	S122	132MA4	30000	10658
21.7	3138	2.3	44.76	S153	160M6	40000	19400
21.2	3208	1.3	45.77	S143	160M6	35000	18500
21.1	3184	1.5	69.06	S143	132M4	35000	18500
21.0	3206	1.5	69.06	S143	132MA4	35000	18500
19.8	3395	2.3	73.63	S153	132M4	40000	19400
19.7	3419	2.3	73.63	S153	132MA4	40000	19400
19.0	3573	1.3	50.97	S143	160M6	35000	18500
18.9	3602	2.3	51.38	S153	160M6	40000	19400
18.4	3664	1.2	79.45	S143	132M4	35000	18500
18.2	3689	1.1	79.45	S143	132MA4	35000	18500

5.1 S MOTORREDUCTORES (50Hz)

7.50 kW

n2 [rpm]	M2 [Nm]	fs	i	Reductor	Motor	Fr2 D [N]	Fr2 C-L [N]
17.2	3953	2.2	56.39	S153	160M6	40000	19400
17.0	4008	1.2	57.17	S143	160M6	35000	18500
16.8	4019	1.8	87.16	S153	132M4	40000	19400
16.6	4047	1.8	87.16	S153	132MA4	40000	19400
15.1	4490	2.1	64.05	S153	160M6	40000	19400
15.0	4534	1.1	64.68	S143	160M6	35000	18500
15.0	4486	1.8	97.27	S153	132M4	40000	19400
14.9	4517	1.8	97.27	S153	132MA4	40000	19400
14.8	4557	1.0	98.81	S143	132M4	35000	18500
14.7	4588	1.0	98.81	S143	132MA4	35000	18500
14.0	4841	1.1	69.06	S143	160M6	35000	18500
13.3	5075	0.9	110.05	S143	132M4	35000	18500
13.2	5110	0.9	110.05	S143	132MA4	35000	18500
13.2	5161	1.6	73.63	S153	160M6	40000	19400
13.1	5150	1.8	111.67	S153	132M4	40000	19400
13.0	5185	1.8	111.67	S153	132MA4	40000	19400
11.9	5652	1.7	122.57	S153	132M4	40000	19400
11.8	5691	1.7	122.57	S153	132MA4	40000	19400
11.1	6110	1.2	87.16	S153	160M6	40000	19400
10.5	6420	1.4	139.21	S153	132M4	40000	19400
10.4	6464	1.4	139.21	S153	132MA4	40000	19400
10.0	6819	1.2	97.27	S153	160M6	40000	19400
9.5	7102	1.0	154.02	S153	132M4	40000	19400
9.4	7151	1.0	154.02	S153	132MA4	40000	19400
9.1	7379	1.1	160.02	S153	132M4	40000	19400
9.1	7430	1.1	160.02	S153	132MA4	40000	19400
8.7	7829	1.2	111.67	S153	160M6	40000	19400
8.3	8154	1.0	176.81	S153	132M4	40000	19400
8.2	8210	1.0	176.81	S153	132MA4	40000	19400
7.9	8592	1.2	122.57	S153	160M6	40000	19400
7.5	8949	1.0	194.06	S153	132M4	40000	19400
7.5	9011	1.0	194.06	S153	132MA4	40000	19400
7.0	9759	1.0	139.21	S153	160M6	40000	19400
6.6	10164	0.9	220.42	S153	132M4	40000	19400
6.6	10235	0.9	220.42	S153	132MA4	40000	19400

9.20 kW

n2 [rpm]	M2 [Nm]	fs	i	Reductor	Motor	Fr2 D [N]	Fr2 C-L [N]
399.2	204	2.0	7.34	S082	132M2	10175	2907
396.5	205	2.0	7.34	S082	132MA2	10195	2913
363.4	224	2.0	8.06	S082	132M2	10450	2986
363.4	224	2.8	8.06	S102	132M2	13031	3723
360.9	226	2.0	8.06	S082	132MA2	10471	2992

5.1 S MOTORREDUCTORES (50Hz)

9.20 kW

n2 [rpm]	M2 [Nm]	fs	i	Reductor	Motor	Fr2 D [N]	Fr2 C-L [N]
360.9	226	2.8	8.06	S102	132MA2	13058	3731
331.2	246	2.7	8.85	S102	132M2	13398	3828
328.9	247	2.7	8.85	S102	132MA2	13426	3836
294.7	276	1.8	9.94	S082	132M2	11080	3166
292.6	278	1.8	9.94	S082	132MA2	11101	3172
269.2	302	2.4	10.88	S102	132M2	14245	4070
267.4	304	2.3	10.88	S102	132MA2	14274	4078
252.5	322	1.6	11.61	S082	132M2	11556	3302
250.7	325	1.6	11.61	S082	132MA2	11577	3308
229.8	354	1.6	12.75	S082	132M2	11849	3385
229.8	354	2.1	12.75	S102	132M2	14916	4262
228.2	357	1.6	12.75	S082	132MA2	11871	3392
228.2	357	2.1	12.75	S102	132MA2	14946	4270
209.4	389	2.3	13.99	S102	132M2	15319	4377
208.6	390	1.5	14.04	S082	132M2	12153	3472
208.0	391	2.3	13.99	S102	132MA2	15349	4385
207.2	393	1.5	14.04	S082	132MA2	12174	3478
198.2	426	3.3	7.32	S142	132MB4	34533	18500
197.6	427	1.3	7.34	S082	132MB4	12275	3507
189.9	429	1.3	15.43	S082	132M2	12450	3557
189.9	429	2.2	15.43	S102	132M2	15751	4500
188.6	432	1.3	15.43	S082	132MA2	12471	3563
188.6	432	2.2	15.43	S102	132MA2	15782	4509
186.3	437	1.3	15.73	S082	132M2	12510	3574
185.1	440	1.3	15.73	S082	132MA2	12532	3580
179.8	469	1.3	8.06	S082	132MB4	12568	3591
179.8	469	1.8	8.06	S102	132MB4	15952	4558
176.7	477	3.3	8.21	S142	132MB4	35000	18500
170.2	478	2.0	17.21	S102	132M2	16243	4641
169.4	480	1.2	17.29	S082	132M2	12812	3660
169.1	481	2.0	17.21	S102	132MA2	16274	4650
168.3	484	1.2	17.29	S082	132MA2	12833	3667
163.9	515	1.7	8.85	S102	132MB4	16368	4677
156.2	540	3.3	9.29	S142	132MB4	35000	18500
154.2	528	2.0	19.00	S102	132M2	16693	4770
154.0	529	1.1	19.03	S082	132M2	13114	3747
153.2	531	2.0	19.00	S102	132MA2	16725	4779
152.9	532	1.1	19.03	S082	132MA2	13136	3753
146.3	577	3.3	9.91	S142	132MB4	35000	18500
145.8	578	1.1	9.94	S082	132MB4	13220	3777
145.5	559	1.0	20.14	S082	132M2	13294	3798
144.5	563	1.0	20.14	S082	132MA2	13315	3804
140.7	579	1.8	20.83	S102	132M2	17118	4891
139.7	583	1.8	20.83	S102	132MA2	17150	4900
137.9	590	3.6	21.25	S122	132M2	24578	7022

5.1 S MOTORREDUCTORES (50Hz)

9.20 kW

n2 [rpm]	M2 [Nm]	fs	i	Reductor	Motor	Fr2 D [N]	Fr2 C-L [N]
136.9	594	3.5	21.25	S122	132MA2	24623	7035
133.2	633	1.5	10.88	S102	132MB4	17314	4947
132.4	615	1.7	22.13	S102	132M2	17399	4971
131.5	619	1.7	22.13	S102	132MA2	17431	4980
131.0	621	3.4	22.37	S122	132M2	24918	7119
130.1	626	3.4	22.37	S122	132MA2	24963	7132
127.1	663	3.1	11.41	S142	132MB4	35000	18500
125.8	647	3.4	23.29	S122	132M2	25187	7196
124.9	675	1.0	11.61	S082	132MB4	13693	3912
124.9	651	3.3	23.29	S122	132MA2	25233	7209
120.7	674	1.7	24.28	S102	132M2	17835	5096
119.9	679	1.7	24.28	S102	132MA2	17867	5105
113.7	742	1.0	12.75	S082	132MB4	13976	3993
113.7	742	1.3	12.75	S102	132MB4	18048	5157
113.2	745	2.6	12.81	S142	132MB4	35000	18500
112.0	727	3.1	26.15	S122	132M2	25964	7418
111.3	732	1.5	26.33	S102	132M2	18219	5205
111.3	732	3.1	26.15	S122	132MA2	26010	7431
110.5	737	1.5	26.33	S102	132MA2	18252	5215
103.6	814	1.5	13.99	S102	132MB4	18482	5281
103.2	817	0.9	14.04	S082	132MB4	14261	4075
102.4	794	2.8	28.60	S122	132M2	26566	7590
101.7	800	2.8	28.60	S122	132MA2	26613	7604
101.6	830	2.1	14.27	S142	132MB4	35000	18500
98.1	830	1.4	29.87	S102	132M2	18818	5377
97.4	835	1.3	29.87	S102	132MA2	18851	5386
96.0	848	2.7	30.51	S122	132M2	27004	7715
95.4	853	2.6	30.51	S122	132MA2	27050	7729
94.0	897	1.4	15.43	S102	132MB4	18941	5412
90.6	931	2.1	16.01	S142	132MB4	35000	18500
90.4	900	1.2	32.40	S102	132M2	19206	5487
89.8	906	1.2	32.40	S102	132MA2	19239	5497
89.5	910	2.5	32.76	S122	132M2	27483	7852
88.8	916	2.5	32.76	S122	132MA2	27530	7866
87.6	929	2.4	33.44	S122	132M2	27624	7893
87.0	935	2.4	33.44	S122	132MA2	27670	7906
84.2	1001	1.3	17.21	S102	132MB4	19454	5558
83.9	970	1.1	34.91	S102	132M2	19562	5589
83.4	976	1.1	34.91	S102	132MA2	19595	5599
83.2	978	2.3	35.20	S122	132M2	27969	7991
82.7	985	2.3	35.20	S122	132MA2	28016	8004
80.1	1053	2.1	18.11	S142	132MB4	35000	18500
76.5	1064	1.1	38.30	S102	132M2	20004	5715
76.3	1105	1.3	19.00	S102	132MB4	19915	5690
76.0	1071	1.1	38.30	S102	132MA2	20036	5725

5.1 S MOTORREDUCTORES (50Hz)

9.20 kW

n2 [rpm]	M2 [Nm]	fs	i	Reductor	Motor	Fr2 D [N]	Fr2 C-L [N]
75.0	1125	2.1	19.33	S142	132MB4	35000	18500
71.3	1141	2.0	41.07	S122	132M2	29005	8287
70.9	1149	2.0	41.07	S122	132MA2	29051	8300
69.6	1212	1.2	20.83	S102	132MB4	20340	5811
68.2	1236	2.3	21.25	S122	132MB4	29138	8325
67.2	1211	1.9	43.60	S122	132M2	29403	8401
66.7	1219	1.8	43.60	S122	132MA2	29448	8414
65.7	1240	1.5	44.63	S122	132M2	29558	8445
65.5	1287	1.1	22.13	S102	132MB4	20617	5891
65.2	1248	1.4	44.63	S122	132MA2	29603	8458
65.2	1294	1.9	22.24	S142	132MB4	35000	18500
64.8	1301	2.2	22.37	S122	132MB4	29468	8420
62.3	1355	2.1	23.29	S122	132MB4	29728	8494
59.7	1412	1.1	24.28	S102	132MB4	21037	6011
59.7	1362	1.3	49.04	S122	132M2	30000	8622
59.3	1372	1.3	49.04	S122	132MA2	30000	8634
57.4	1469	1.4	25.26	S142	132MB4	35000	18500
55.4	1521	2.0	26.15	S122	132MB4	30000	8702
55.1	1532	1.0	26.33	S102	132MB4	21399	6114
54.5	1493	1.3	53.75	S122	132M2	30000	8790
54.1	1503	1.3	53.75	S122	132MA2	30000	8803
51.2	1648	1.4	28.33	S142	132MB4	35000	18500
50.7	1664	1.8	28.60	S122	132MB4	30000	8858
47.5	1775	1.7	30.51	S122	132MB4	30000	8967
45.2	1764	1.1	64.84	S123	132M2	30000	9162
45.2	1864	1.4	32.05	S142	132MB4	35000	18500
44.9	1776	1.1	64.84	S123	132MA2	30000	9174
44.4	1833	1.2	66.00	S122	132M2	30000	9151
44.3	1905	1.6	32.76	S122	132MB4	30000	9084
44.1	1846	1.2	66.00	S122	132MA2	30000	9163
43.4	1945	1.5	33.44	S122	132MB4	30000	9117
42.4	1991	1.4	34.22	S142	132MB4	35000	18500
41.2	2048	1.5	35.20	S122	132MB4	30000	9198
41.2	1933	1.0	71.07	S123	132M2	30000	9319
40.9	1946	1.0	71.07	S123	132MA2	30000	9330
37.3	2134	1.1	78.46	S123	132M2	30000	9480
37.1	2149	1.0	78.46	S123	132MA2	30000	9491
36.8	2290	1.9	39.38	S142	132MB4	35000	18500
36.2	2284	2.7	40.10	S153	132MB4	40000	19400
35.3	2389	1.3	41.07	S122	132MB4	30000	9424
33.3	2536	1.2	43.60	S122	132MB4	30000	9504
32.5	2596	0.9	44.63	S122	132MB4	30000	9534
32.4	2549	2.7	44.76	S153	132MB4	40000	19400
31.7	2607	1.5	45.77	S143	132MB4	35000	18500
28.4	2903	1.5	50.97	S143	132MB4	35000	18500

5.1 S MOTORREDUCTORES (50Hz)

9.20 kW

n2 [rpm]	M2 [Nm]	fs	i	Reductor	Motor	Fr2 D [N]	Fr2 C-L [N]
28.2	2927	2.7	51.38	S153	132MB4	40000	19400
25.7	3212	2.6	56.39	S153	132MB4	40000	19400
25.4	3256	1.5	57.17	S143	132MB4	35000	18500
22.6	3648	2.4	64.05	S153	132MB4	40000	19400
22.4	3684	1.3	64.68	S143	132MB4	35000	18500
21.0	3933	1.2	69.06	S143	132MB4	35000	18500
19.7	4194	1.9	73.63	S153	132MB4	40000	19400
18.2	4525	0.9	79.45	S143	132MB4	35000	18500
16.6	4964	1.4	87.16	S153	132MB4	40000	19400
14.9	5541	1.4	97.27	S153	132MB4	40000	19400
13.0	6361	1.4	111.67	S153	132MB4	40000	19400
11.8	6981	1.4	122.57	S153	132MB4	40000	19400
10.4	7929	1.2	139.21	S153	132MB4	40000	19400

11.00 kW

n2 [rpm]	M2 [Nm]	fs	i	Reductor	Motor	Fr2 D [N]	Fr2 C-L [N]
396.5	245	1.7	7.34	S082	132MB2	10063	2875
360.9	270	1.7	8.06	S082	132MB2	10326	2950
360.9	270	2.4	8.06	S102	132MB2	12944	3698
349.7	288	3.5	4.12	S142	132MC4	29139	16651
328.9	296	2.3	8.85	S102	132MB2	13300	3800
314.0	321	3.5	4.59	S142	132MC4	30017	17153
292.6	333	1.5	9.94	S082	132MB2	10922	3121
279.9	360	3.5	5.14	S142	132MC4	30966	17695
267.4	364	2.0	10.88	S102	132MB2	14119	4034
250.7	388	1.4	11.61	S082	132MB2	11369	3248
247.5	408	3.5	5.82	S142	132MC4	31997	18284
235.6	432	3.4	4.12	S142	160L6	32378	18500
231.8	435	3.5	6.21	S142	132MC4	32549	18500
228.2	426	1.3	12.75	S082	132MB2	11641	3326
228.2	426	1.8	12.75	S102	132MB2	14765	4218
211.5	482	3.4	4.59	S142	160L6	33285	18500
208.0	468	1.9	13.99	S102	132MB2	15150	4329
207.2	470	1.2	14.04	S082	132MB2	11922	3406
201.6	500	3.8	7.32	S142	160MA4	33731	18500
196.8	512	2.7	7.32	S142	132MC4	33935	18500
196.8	512	3.7	7.32	S142	160S4	33935	18500
196.2	514	1.1	7.34	S082	132MC4	12021	3434
188.6	516	1.1	15.43	S082	132MB2	12194	3484
188.6	516	1.8	15.43	S102	132MB2	15563	4447
188.6	540	3.4	5.14	S142	160L6	34255	18500
185.1	526	1.1	15.73	S082	132MB2	12249	3500
182.9	551	1.5	8.06	S102	160MA4	15642	4469

5.1 S MOTORREDUCTORES (50Hz)

11.00 kW

n2 [rpm]	M2 [Nm]	fs	i	Reductor	Motor	Fr2 D [N]	Fr2 C-L [N]
179.7	561	3.8	8.21	S142	160MA4	34706	18500
178.6	565	1.1	8.06	S082	132MC4	12286	3510
178.6	565	1.5	8.06	S102	132MC4	15743	4498
178.6	565	1.5	8.06	S102	160S4	15743	4498
175.4	575	2.7	8.21	S142	132MC4	34910	18500
175.4	575	3.7	8.21	S142	160S4	34910	18500
173.9	580	2.6	8.48	S122	160MA4	22641	6469
169.8	594	2.5	8.48	S122	160S4	22785	6510
169.1	576	1.7	17.21	S102	132MB2	16029	4580
166.7	605	1.5	8.85	S102	160MA4	16034	4581
166.7	611	3.4	5.82	S142	160L6	35000	18500
162.8	620	1.5	8.85	S102	132MC4	16136	4610
162.8	620	1.5	8.85	S102	160S4	16136	4610
158.9	635	3.8	9.29	S142	160MA4	35000	18500
158.6	636	2.7	9.30	S122	160MA4	23193	6627
156.1	652	3.4	6.21	S142	160L6	35000	18500
155.1	650	2.7	9.29	S142	132MC4	35000	18500
155.1	650	3.7	9.29	S142	160S4	35000	18500
154.9	651	2.6	9.30	S122	160S4	23338	6668
153.2	635	1.7	19.00	S102	132MB2	16455	4701
148.8	678	3.8	9.91	S142	160MA4	35000	18500
145.3	694	2.7	9.91	S142	132MC4	35000	18500
145.3	694	3.7	9.91	S142	160S4	35000	18500
144.8	696	0.9	9.94	S082	132MC4	12867	3676
144.1	700	2.4	10.24	S122	160MA4	23777	6793
140.7	717	2.4	10.24	S122	160S4	23923	6835
139.7	697	1.5	20.83	S102	132MB2	16854	4815
136.9	711	3.0	21.25	S122	132MB2	24183	6909
135.5	744	1.3	10.88	S102	160MA4	16919	4834
132.6	768	2.6	7.32	S142	160L6	35000	18500
132.3	762	1.2	10.88	S102	132MC4	17022	4863
132.3	762	1.2	10.88	S102	160S4	17022	4863
131.5	740	1.4	22.13	S102	132MB2	17117	4891
130.1	748	2.8	22.37	S122	132MB2	24500	7000
129.3	780	3.6	11.41	S142	160MA4	35000	18500
129.2	781	2.4	11.42	S122	160MA4	24439	6983
126.2	799	2.6	11.41	S142	132MC4	35000	18500
126.2	799	3.5	11.41	S142	160S4	35000	18500
126.1	800	2.4	11.42	S122	160S4	24585	7024
124.9	779	2.8	23.29	S122	132MB2	24750	7072
120.3	847	1.1	8.06	S102	160L6	17408	4974
119.9	812	1.4	24.28	S102	132MB2	17522	5006
118.3	852	3.9	12.46	S152	160MA4	40000	19400
118.2	862	2.6	8.21	S142	160L6	35000	18500
116.8	863	2.5	12.63	S122	160MA4	25052	7158

5.1 S MOTORREDUCTORES (50Hz)

11.00 kW

n2 [rpm]	M2 [Nm]	fs	i	Reductor	Motor	Fr2 D [N]	Fr2 C-L [N]
115.7	872	1.1	12.75	S102	160MA4	17598	5028
115.5	873	3.8	12.46	S152	160S4	40000	19400
115.1	876	3.0	12.81	S142	160MA4	35000	18500
114.4	891	1.8	8.48	S122	160L6	25148	7185
114.1	884	2.5	12.63	S122	160S4	25197	7199
112.9	893	1.1	12.75	S102	132MC4	17701	5057
112.9	893	1.1	12.75	S102	160S4	17701	5057
112.4	897	2.1	12.81	S142	132MC4	35000	18500
112.4	897	2.9	12.81	S142	160S4	35000	18500
111.3	875	2.6	26.15	S122	132MB2	25468	7276
110.5	881	1.3	26.33	S102	132MB2	17878	5108
109.6	929	1.0	8.85	S102	160L6	17804	5087
106.6	946	2.5	13.84	S122	160MA4	25608	7317
106.0	951	3.9	13.91	S152	160MA4	40000	19400
105.4	956	1.3	13.99	S102	160MA4	17996	5142
104.5	975	2.6	9.29	S142	160L6	35000	18500
104.3	976	1.8	9.30	S122	160L6	25700	7343
104.1	969	2.5	13.84	S122	160S4	25753	7358
103.5	974	3.8	13.91	S152	160S4	40000	19400
103.4	976	2.5	14.27	S142	160MA4	35000	18500
102.9	980	1.2	13.99	S102	132MC4	18098	5171
102.9	980	1.2	13.99	S102	160S4	18098	5171
101.7	956	2.4	28.60	S122	132MB2	26020	7434
100.9	999	1.8	14.27	S142	132MC4	35000	18500
100.9	999	2.4	14.27	S142	160S4	35000	18500
97.8	1041	2.6	9.91	S142	160L6	35000	18500
97.4	999	1.1	29.87	S102	132MB2	18427	5265
95.4	1020	2.2	30.51	S122	132MB2	26417	7548
94.7	1075	1.7	10.24	S122	160L6	26276	7508
93.3	1081	1.2	15.43	S102	132MC4	18515	5290
92.4	1092	3.9	15.97	S152	160MA4	40000	19400
92.2	1094	2.4	16.01	S142	160MA4	35000	18500
90.2	1118	3.8	15.97	S152	160S4	40000	19400
90.0	1121	1.7	16.01	S142	132MC4	35000	18500
90.0	1121	2.4	16.01	S142	160S4	35000	18500
89.8	1084	1.0	32.40	S102	132MB2	18779	5365
88.8	1095	2.1	32.76	S122	132MB2	26850	7672
87.0	1118	2.0	33.44	S122	132MB2	26977	7708
86.8	1162	2.2	16.99	S122	160MA4	26837	7668
85.7	1177	1.1	17.21	S102	160MA4	18874	5393
85.0	1199	1.7	11.42	S122	160L6	26918	7691
85.0	1198	2.5	11.41	S142	160L6	35000	18500
84.7	1190	2.2	16.99	S122	160S4	26979	7708
84.2	1198	3.9	17.53	S152	160MA4	40000	19400
83.7	1205	1.1	17.21	S102	132MC4	18974	5421

5.1 S MOTORREDUCTORES (50Hz)

11.00 kW

n2 [rpm]	M2 [Nm]	fs	i	Reductor	Motor	Fr2 D [N]	Fr2 C-L [N]
83.7	1205	1.1	17.21	S102	160S4	18974	5421
82.7	1177	1.9	35.20	S122	132MB2	27286	7796
82.2	1227	3.8	17.53	S152	160S4	40000	19400
81.5	1238	2.4	18.11	S142	160MA4	35000	18500
79.5	1268	1.7	18.11	S142	132MC4	35000	18500
79.5	1268	2.4	18.11	S142	160S4	35000	18500
77.8	1309	2.7	12.46	S152	160L6	40000	19400
76.8	1326	1.7	12.63	S122	160L6	27500	7857
76.3	1322	2.4	19.33	S142	160MA4	35000	18500
75.8	1331	1.1	19.00	S102	132MC4	19382	5538
75.7	1345	2.0	12.81	S142	160L6	35000	18500
74.5	1354	1.7	19.33	S142	132MC4	35000	18500
74.5	1354	2.4	19.33	S142	160S4	35000	18500
74.1	1361	3.9	19.91	S152	160MA4	40000	19400
72.3	1394	3.8	19.91	S152	160S4	40000	19400
70.9	1373	1.6	41.07	S122	132MB2	28199	8057
70.1	1453	1.7	13.84	S122	160L6	28017	8005
69.7	1461	2.7	13.91	S152	160L6	40000	19400
69.4	1453	1.9	21.25	S122	160MA4	28127	8036
69.1	1459	1.0	20.83	S102	132MC4	19752	5644
68.0	1499	1.7	14.27	S142	160L6	35000	18500
67.8	1488	1.9	21.25	S122	132MC4	28260	8074
67.8	1488	1.9	21.25	S122	160S4	28260	8074
66.7	1458	1.5	43.60	S122	132MB2	28544	8156
66.3	1521	2.2	22.24	S142	160MA4	35000	18500
65.9	1529	1.8	22.37	S122	160MA4	28411	8117
65.2	1493	1.2	44.63	S122	132MB2	28678	8194
65.1	1549	0.9	22.13	S102	132MC4	19991	5712
64.7	1558	1.6	22.24	S142	132MC4	35000	18500
64.7	1558	2.1	22.24	S142	160S4	35000	18500
64.5	1564	3.9	22.88	S152	160MA4	40000	19400
64.4	1566	1.8	22.37	S122	132MC4	28542	8155
64.4	1566	1.8	22.37	S122	160S4	28542	8155
63.3	1592	1.8	23.29	S122	160MA4	28631	8180
62.9	1602	3.8	22.88	S152	160S4	40000	19400
61.8	1631	1.8	23.29	S122	132MC4	28761	8217
61.8	1631	1.8	23.29	S122	160S4	28761	8217
60.7	1677	2.7	15.97	S152	160L6	40000	19400
60.6	1681	1.7	16.01	S142	160L6	35000	18500
59.3	1640	1.1	49.04	S122	132MB2	29203	8344
58.4	1727	1.7	25.26	S142	160MA4	35000	18500
57.1	1784	1.5	16.99	S122	160L6	29113	8318
57.0	1769	1.2	25.26	S142	132MC4	35000	18500
57.0	1769	1.6	25.26	S142	160S4	35000	18500
56.4	1788	1.7	26.15	S122	160MA4	29242	8355

5.1 S MOTORREDUCTORES (50Hz)

11.00 kW

n2 [rpm]	M2 [Nm]	fs	i	Reductor	Motor	Fr2 D [N]	Fr2 C-L [N]
55.3	1840	2.7	17.53	S152	160L6	40000	19400
55.1	1832	1.6	26.15	S122	132MC4	29364	8390
55.1	1832	1.6	26.15	S122	160S4	29364	8390
54.4	1853	3.3	27.11	S152	160MA4	40000	19400
54.1	1798	1.1	53.75	S122	132MB2	29695	8484
53.6	1901	1.7	18.11	S142	160L6	35000	18500
53.1	1898	3.2	27.11	S152	160S4	40000	19400
52.1	1937	1.7	28.33	S142	160MA4	35000	18500
51.6	1955	1.5	28.60	S122	160MA4	29687	8482
50.8	1984	1.2	28.33	S142	132MC4	35000	18500
50.8	1984	1.6	28.33	S142	160S4	35000	18500
50.3	2003	1.5	28.60	S122	132MC4	29802	8515
50.3	2003	1.5	28.60	S122	160S4	29802	8515
50.2	2030	1.7	19.33	S142	160L6	35000	18500
49.6	2034	3.3	29.75	S152	160MA4	40000	19400
48.7	2090	2.7	19.91	S152	160L6	40000	19400
48.4	2083	3.2	29.75	S152	160S4	40000	19400
48.3	2086	1.4	30.51	S122	160MA4	29992	8569
47.2	2137	1.4	30.51	S122	132MC4	30000	8600
47.2	2137	1.4	30.51	S122	160S4	30000	8600
46.0	2191	1.7	32.05	S142	160MA4	35000	18500
45.6	2231	1.3	21.25	S122	160L6	30000	8619
45.0	2240	1.3	32.76	S122	160MA4	30000	8660
44.9	2245	1.2	32.05	S142	132MC4	35000	18500
44.9	2245	1.6	32.05	S142	160S4	35000	18500
44.1	2287	1.3	33.44	S122	160MA4	30000	8685
44.1	2207	1.0	66.00	S122	132MB2	30000	8772
44.0	2294	1.3	32.76	S122	132MC4	30000	8689
44.0	2294	1.3	32.76	S122	160S4	30000	8689
43.7	2310	3.3	33.79	S152	160MA4	40000	19400
43.6	2336	1.5	22.24	S142	160L6	35000	18500
43.4	2349	1.3	22.37	S122	160L6	30000	8680
43.1	2342	1.3	33.44	S122	132MC4	30000	8714
43.1	2342	1.3	33.44	S122	160S4	30000	8714
43.1	2340	1.7	34.22	S142	160MA4	35000	18500
42.6	2366	3.2	33.79	S152	160S4	40000	19400
42.4	2403	2.7	22.88	S152	160L6	40000	19400
42.1	2397	1.2	34.22	S142	132MC4	35000	18500
42.1	2397	1.6	34.22	S142	160S4	35000	18500
41.9	2407	1.2	35.20	S122	160MA4	30000	8745
41.6	2446	1.2	23.29	S122	160L6	30000	8726
40.9	2465	1.2	35.20	S122	132MC4	30000	8772
40.9	2465	1.2	35.20	S122	160S4	30000	8772
38.4	2653	1.1	25.26	S142	160L6	35000	18500
38.0	2656	2.9	38.84	S152	160MA4	40000	19400

5.1 S MOTORREDUCTORES (50Hz)

11.00 kW

n2 [rpm]	M2 [Nm]	fs	i	Reductor	Motor	Fr2 D [N]	Fr2 C-L [N]
37.5	2692	1.6	39.38	S142	160MA4	35000	18500
37.1	2746	1.1	26.15	S122	160L6	30000	8844
37.1	2720	2.8	38.84	S152	160S4	40000	19400
36.8	2685	2.3	40.10	S153	160MA4	40000	19400
36.6	2758	1.6	39.38	S142	132MC4	35000	18500
36.6	2758	1.6	39.38	S142	160S4	35000	18500
35.9	2808	1.1	41.07	S122	160MA4	30000	8903
35.9	2750	2.3	40.10	S153	160S4	40000	19400
35.9	2750	2.3	40.10	S153	132MC4	40000	19400
35.8	2846	2.2	27.11	S152	160L6	40000	19400
35.1	2876	1.0	41.07	S122	132MC4	30000	8924
35.1	2876	1.0	41.07	S122	160S4	30000	8924
34.2	2975	1.1	28.33	S142	160L6	35000	18500
33.9	3003	1.0	28.60	S122	160L6	30000	8920
33.0	3053	1.0	43.60	S122	132MC4	30000	8973
33.0	2996	2.3	44.76	S153	160MA4	40000	19400
32.6	3124	2.2	29.75	S152	160L6	40000	19400
32.2	3064	1.3	45.77	S143	160MA4	35000	18500
32.2	3069	2.3	44.76	S153	132MC4	40000	19400
32.2	3069	2.3	44.76	S153	160S4	40000	19400
31.8	3204	1.0	30.51	S122	160L6	30000	8965
31.5	3138	1.3	45.77	S143	132MC4	35000	18500
31.5	3138	1.3	45.77	S143	160S4	35000	18500
30.3	3366	1.1	32.05	S142	160L6	35000	18500
29.6	3440	0.9	32.76	S122	160L6	30000	9005
28.9	3412	1.3	50.97	S143	160MA4	35000	18500
28.7	3548	2.2	33.79	S152	160L6	40000	19400
28.7	3440	2.3	51.38	S153	160MA4	40000	19400
28.3	3594	1.1	34.22	S142	160L6	35000	18500
28.3	3495	1.3	50.97	S143	132MC4	35000	18500
28.3	3495	1.3	50.97	S143	160S4	35000	18500
28.0	3523	2.2	51.38	S153	132MC4	40000	19400
28.0	3523	2.2	51.38	S153	160S4	40000	19400
26.2	3775	2.2	56.39	S153	160MA4	40000	19400
25.8	3828	1.2	57.17	S143	160MA4	35000	18500
25.5	3867	2.1	56.39	S153	132MC4	40000	19400
25.5	3867	2.1	56.39	S153	160S4	40000	19400
25.2	3921	1.2	57.17	S143	132MC4	35000	18500
25.2	3921	1.2	57.17	S143	160S4	35000	18500
25.0	4078	2.0	38.84	S152	160L6	40000	19400
24.6	4135	1.1	39.38	S142	160L6	35000	18500
24.2	4123	1.6	40.10	S153	160L6	40000	19400
23.0	4288	2.1	64.05	S153	160MA4	40000	19400
22.8	4330	1.1	64.68	S143	160MA4	35000	18500
22.5	4392	2.0	64.05	S153	132MC4	40000	19400

5.1 S MOTORREDUCTORES (50Hz)

11.00 kW

n2 [rpm]	M2 [Nm]	fs	i	Reductor	Motor	Fr2 D [N]	Fr2 C-L [N]
22.5	4392	2.0	64.05	S153	160S4	40000	19400
22.3	4435	1.1	64.68	S143	132MC4	35000	18500
22.3	4435	1.1	64.68	S143	160S4	35000	18500
21.7	4602	1.6	44.76	S153	160L6	40000	19400
21.4	4623	1.1	69.06	S143	160MA4	35000	18500
20.9	4735	1.0	69.06	S143	160S4	35000	18500
20.9	4735	1.0	69.06	S143	132MC4	35000	18500
20.0	4929	1.6	73.63	S153	160MA4	40000	19400
19.6	5049	1.5	73.63	S153	132MC4	40000	19400
19.6	5049	1.5	73.63	S153	160S4	40000	19400
18.9	5283	1.6	51.38	S153	160L6	40000	19400
17.2	5798	1.5	56.39	S153	160L6	40000	19400
16.9	5835	1.2	87.16	S153	160MA4	40000	19400
16.5	5977	1.2	87.16	S153	132MC4	40000	19400
16.5	5977	1.2	87.16	S153	160S4	40000	19400
15.2	6512	1.2	97.27	S153	160MA4	40000	19400
15.1	6586	1.4	64.05	S153	160L6	40000	19400
14.8	6671	1.2	97.27	S153	132MC4	40000	19400
14.8	6671	1.2	97.27	S153	160S4	40000	19400
13.2	7570	1.1	73.63	S153	160L6	40000	19400
13.2	7476	1.2	111.67	S153	160MA4	40000	19400
12.9	7658	1.2	111.67	S153	132MC4	40000	19400
12.9	7658	1.2	111.67	S153	160S4	40000	19400
12.0	8205	1.2	122.57	S153	160MA4	40000	19400
11.7	8405	1.1	122.57	S153	132MC4	40000	19400
11.7	8405	1.1	122.57	S153	160S4	40000	19400
10.6	9320	1.0	139.21	S153	160MA4	40000	19400
10.3	9546	1.0	139.21	S153	132MC4	40000	19400
10.3	9546	1.0	139.21	S153	160S4	40000	19400

15.00 kW

n2 [rpm]	M2 [Nm]	fs	i	Reductor	Motor	Fr2 D [N]	Fr2 C-L [N]
358.2	384	3.6	4.12	S142	160LA4	28137	16078
321.6	428	3.6	4.59	S142	160LA4	28921	16526
286.8	480	3.6	5.14	S142	160LA4	29758	17004
253.5	543	3.6	5.82	S142	160LA4	30654	17517
238.0	584	2.5	4.12	S142	180L6	31064	17751
237.4	579	3.6	6.21	S142	160LA4	31128	17787
213.7	650	2.5	4.59	S142	180L6	31832	18190
201.6	682	2.8	7.32	S142	160LA4	32297	18455
190.5	729	2.5	5.14	S142	180L6	32635	18500
182.9	752	1.1	8.06	S102	160LA4	15122	4321
179.7	765	2.8	8.21	S142	160LA4	33097	18500

5.1 S MOTORREDUCTORES (50Hz)

15.00 kW

n2 [rpm]	M2 [Nm]	fs	i	Reductor	Motor	Fr2 D [N]	Fr2 C-L [N]
173.9	791	1.9	8.48	S122	160LA4	21842	6241
171.6	809	3.8	5.71	S152	180L6	40000	19400
168.4	825	2.5	5.82	S142	180L6	33475	18500
166.7	825	1.1	8.85	S102	160LA4	15463	4418
158.9	866	2.8	9.29	S142	160LA4	33930	18500
158.6	867	2.0	9.30	S122	160LA4	22318	6376
157.7	881	2.5	6.21	S142	180L6	33908	18500
150.2	925	3.5	6.52	S152	180L6	40000	19400
148.8	924	2.8	9.91	S142	160LA4	34359	18500
144.1	955	1.8	10.24	S122	160LA4	22813	6518
135.5	1015	0.9	10.88	S102	160LA4	16217	4633
134.6	1032	3.3	7.28	S152	180L6	40000	19400
133.9	1037	1.9	7.32	S142	180L6	34940	18500
129.3	1063	2.6	11.41	S142	160LA4	35000	18500
129.2	1064	1.8	11.42	S122	160LA4	23364	6675
119.4	1163	1.9	8.21	S142	180L6	35000	18500
118.3	1162	2.8	12.46	S152	160LA4	40000	19400
117.3	1185	3.1	8.36	S152	180L6	40000	19400
116.8	1177	1.9	12.63	S122	160LA4	23862	6818
115.5	1202	1.3	8.48	S122	180L6	23871	6820
115.1	1195	2.2	12.81	S142	160LA4	35000	18500
106.8	1300	3.0	9.17	S152	180L6	40000	19400
106.6	1290	1.9	13.84	S122	160LA4	24305	6944
106.0	1297	2.8	13.91	S152	160LA4	40000	19400
105.5	1316	1.9	9.29	S142	180L6	35000	18500
105.4	1304	0.9	13.99	S102	160LA4	17093	4884
105.4	1318	1.4	9.30	S122	180L6	24308	6945
103.4	1331	1.8	14.27	S142	160LA4	35000	18500
98.9	1405	1.9	9.91	S142	180L6	35000	18500
95.7	1451	1.2	10.24	S122	180L6	24749	7071
94.1	1477	3.0	10.42	S152	180L6	40000	19400
92.4	1489	2.8	15.97	S152	160LA4	40000	19400
92.2	1492	1.8	16.01	S142	160LA4	35000	18500
86.8	1584	1.6	16.99	S122	160LA4	25237	7211
85.9	1617	1.8	11.41	S142	180L6	35000	18500
85.8	1618	1.2	11.42	S122	180L6	25224	7207
84.2	1634	2.8	17.53	S152	160LA4	40000	19400
81.5	1688	1.8	18.11	S142	160LA4	35000	18500
78.6	1766	2.0	12.46	S152	180L6	40000	19400
77.6	1789	1.3	12.63	S122	180L6	25634	7324
76.5	1816	1.5	12.81	S142	180L6	35000	18500
76.3	1803	1.8	19.33	S142	160LA4	35000	18500
74.1	1856	2.8	19.91	S152	160LA4	40000	19400
70.8	1961	1.3	13.84	S122	180L6	25979	7423
70.5	1971	2.0	13.91	S152	180L6	40000	19400

5.1 S MOTORREDUCTORES (50Hz)

15.00 kW

n2 [rpm]	M2 [Nm]	fs	i	Reductor	Motor	Fr2 D [N]	Fr2 C-L [N]
69.4	1981	1.4	21.25	S122	160LA4	26125	7464
68.7	2023	1.3	14.27	S142	180L6	35000	18500
66.3	2074	1.6	22.24	S142	160LA4	35000	18500
65.9	2085	1.3	22.37	S122	160LA4	26304	7515
64.5	2133	2.8	22.88	S152	160LA4	40000	19400
63.3	2172	1.3	23.29	S122	160LA4	26438	7554
61.4	2263	2.0	15.97	S152	180L6	40000	19400
61.2	2269	1.2	16.01	S142	180L6	35000	18500
58.4	2355	1.2	25.26	S142	160LA4	35000	18500
57.7	2408	1.1	16.99	S122	180L6	26628	7608
56.4	2438	1.2	26.15	S122	160LA4	26778	7651
55.9	2484	2.0	17.53	S152	180L6	40000	19400
54.4	2527	2.4	27.11	S152	160LA4	40000	19400
54.1	2566	1.2	18.11	S142	180L6	35000	18500
52.1	2642	1.2	28.33	S142	160LA4	35000	18500
51.6	2666	1.1	28.60	S122	160LA4	26993	7712
50.7	2740	1.2	19.33	S142	180L6	35000	18500
49.6	2774	2.4	29.75	S152	160LA4	40000	19400
49.2	2821	2.0	19.91	S152	180L6	40000	19400
48.3	2845	1.1	30.51	S122	160LA4	27118	7748
46.1	3012	1.0	21.25	S122	180L6	27079	7737
46.0	2988	1.2	32.05	S142	160LA4	35000	18500
45.0	3054	1.0	32.76	S122	160LA4	27224	7778
44.1	3118	1.0	33.44	S122	160LA4	27248	7785
44.1	3153	1.1	22.24	S142	180L6	35000	18500
43.8	3170	0.9	22.37	S122	180L6	27136	7753
43.7	3150	2.4	33.79	S152	160LA4	40000	19400
43.1	3191	1.2	34.22	S142	160LA4	35000	18500
42.8	3243	2.0	22.88	S152	180L6	40000	19400
42.1	3301	0.9	23.29	S122	180L6	27166	7762
41.9	3282	0.9	35.20	S122	160LA4	27293	7798
38.0	3621	2.1	38.84	S152	160LA4	40000	19400
37.5	3671	1.2	39.38	S142	160LA4	35000	18500
36.8	3661	1.7	40.10	S153	160LA4	40000	19400
36.2	3842	1.7	27.11	S152	180L6	40000	19400
33.0	4086	1.7	44.76	S153	160LA4	40000	19400
32.9	4216	1.7	29.75	S152	180L6	40000	19400
32.2	4178	1.0	45.77	S143	160LA4	35000	18500
29.0	4789	1.7	33.79	S152	180L6	40000	19400
28.9	4653	1.0	50.97	S143	160LA4	34794	18500
28.7	4691	1.7	51.38	S153	160LA4	40000	19400
26.2	5148	1.6	56.39	S153	160LA4	40000	19400
25.8	5219	0.9	57.17	S143	160LA4	33091	18500
25.2	5505	1.5	38.84	S152	180L6	40000	19400
24.4	5565	1.2	40.10	S153	180L6	40000	19400

5.1 S MOTORREDUCTORES (50Hz)

15.00 kW

n2 [rpm]	M2 [Nm]	fs	i	Reductor	Motor	Fr2 D [N]	Fr2 C-L [N]
23.0	5847	1.5	64.05	S153	160LA4	40000	19400
21.9	6211	1.2	44.76	S153	180L6	40000	19400
20.0	6721	1.2	73.63	S153	160LA4	40000	19400
19.1	7131	1.2	51.38	S153	180L6	40000	19400
17.4	7826	1.1	56.39	S153	180L6	40000	19400
15.3	8889	1.0	64.05	S153	180L6	40000	19400

18.50 kW

n2 [rpm]	M2 [Nm]	fs	i	Reductor	Motor	Fr2 D [N]	Fr2 C-L [N]
357.0	475	2.9	4.12	S142	180M4	27453	15687
320.5	529	2.9	4.59	S142	180M4	28156	16089
285.8	593	2.9	5.14	S142	180M4	28897	16513
252.6	671	2.9	5.82	S142	180M4	29677	16958
241.3	710	3.8	4.06	S152	200LA6	39103	19400
238.0	720	2.0	4.12	S142	200LA6	29990	17137
236.6	717	2.9	6.21	S142	180M4	30083	17190
216.2	792	3.8	4.53	S152	200LA6	40000	19400
213.7	802	2.0	4.59	S142	200LA6	30636	17506
201.9	840	3.9	7.28	S152	180M4	40000	19400
200.9	844	2.3	7.32	S142	180M4	31061	17749
190.5	899	2.0	5.14	S142	200LA6	31294	17882
188.3	910	3.4	5.20	S152	200LA6	40000	19400
179.1	947	2.3	8.21	S142	180M4	31707	18118
175.9	964	3.7	8.36	S152	180M4	40000	19400
173.3	979	1.5	8.48	S122	180M4	21158	6045
171.6	998	3.1	5.71	S152	200LA6	40000	19400
168.4	1017	2.0	5.82	S142	200LA6	31957	18261
160.3	1058	3.5	9.17	S152	180M4	40000	19400
158.3	1071	2.3	9.29	S142	180M4	32354	18488
158.1	1073	1.6	9.30	S122	180M4	21566	6162
157.7	1086	2.0	6.21	S142	200LA6	32288	18450
150.2	1140	2.8	6.52	S152	200LA6	40000	19400
148.3	1144	2.3	9.91	S142	180M4	32674	18500
143.6	1181	1.4	10.24	S122	180M4	21983	6281
141.1	1202	3.5	10.42	S152	180M4	40000	19400
134.6	1273	2.7	7.28	S152	200LA6	40000	19400
133.9	1279	1.6	7.32	S142	200LA6	33032	18500
128.9	1316	2.1	11.41	S142	180M4	33291	18500
128.8	1317	1.4	11.42	S122	180M4	22437	6411
119.4	1435	1.6	8.21	S142	200LA6	33470	18500
117.9	1438	2.3	12.46	S152	180M4	40000	19400
117.3	1461	2.5	8.36	S152	200LA6	40000	19400
116.4	1457	1.5	12.63	S122	180M4	22835	6524

5.1 S MOTORREDUCTORES (50Hz)

18.50 kW

n2 [rpm]	M2 [Nm]	fs	i	Reductor	Motor	Fr2 D [N]	Fr2 C-L [N]
115.5	1483	1.1	8.48	S122	200LA6	22809	6517
114.7	1478	1.8	12.81	S142	180M4	33719	18500
106.8	1603	2.5	9.17	S152	200LA6	40000	19400
106.2	1597	1.5	13.84	S122	180M4	23176	6622
105.7	1605	2.3	13.91	S152	180M4	40000	19400
105.5	1623	1.6	9.29	S142	200LA6	33845	18500
105.4	1625	1.1	9.30	S122	200LA6	23143	6612
103.0	1647	1.5	14.27	S142	180M4	34036	18500
98.9	1733	1.6	9.91	S142	200LA6	33998	18500
95.7	1790	1.0	10.24	S122	200LA6	23467	6705
94.1	1821	2.4	10.42	S152	200LA6	40000	19400
92.1	1842	2.3	15.97	S152	180M4	40000	19400
91.8	1847	1.4	16.01	S142	180M4	34271	18500
86.5	1961	1.3	16.99	S122	180M4	23846	6813
85.9	1994	1.5	11.41	S142	200LA6	34198	18500
85.8	1996	1.0	11.42	S122	200LA6	23794	6798
83.9	2022	2.3	17.53	S152	180M4	40000	19400
81.2	2089	1.4	18.11	S142	180M4	34388	18500
78.6	2179	1.6	12.46	S152	200LA6	40000	19400
77.6	2207	1.0	12.63	S122	200LA6	24052	6872
76.5	2240	1.2	12.81	S142	200LA6	34212	18500
76.0	2231	1.4	19.33	S142	180M4	34384	18500
73.8	2297	2.3	19.91	S152	180M4	40000	19400
70.8	2419	1.0	13.84	S122	200LA6	24245	6927
70.5	2431	1.6	13.91	S152	200LA6	40000	19400
69.2	2452	1.1	21.25	S122	180M4	24380	6966
68.7	2495	1.0	14.27	S142	200LA6	34080	18500
66.1	2567	1.3	22.24	S142	180M4	34198	18500
65.7	2581	1.1	22.37	S122	180M4	24466	6990
64.2	2640	2.3	22.88	S152	180M4	40000	19400
63.1	2687	1.1	23.29	S122	180M4	24523	7006
61.4	2791	1.6	15.97	S152	200LA6	40000	19400
61.2	2798	1.0	16.01	S142	200LA6	33763	18500
58.2	2915	1.0	25.26	S142	180M4	33786	18500
57.7	2970	0.9	16.99	S122	200LA6	24499	7000
56.2	3018	1.0	26.15	S122	180M4	24625	7036
55.9	3064	1.6	17.53	S152	200LA6	40000	19400
54.2	3127	1.9	27.11	S152	180M4	40000	19400
54.1	3165	1.0	18.11	S142	200LA6	33185	18500
51.9	3269	1.0	28.33	S142	180M4	33182	18500
51.4	3300	0.9	28.60	S122	180M4	24635	7039
50.7	3379	1.0	19.33	S142	200LA6	32766	18500
49.4	3433	1.9	29.75	S152	180M4	40000	19400
49.2	3480	1.6	19.91	S152	200LA6	40000	19400
45.9	3698	1.0	32.05	S142	180M4	32248	18427

5.1 S MOTORREDUCTORES (50Hz)

18.50 kW

n2 [rpm]	M2 [Nm]	fs	i	Reductor	Motor	Fr2 D [N]	Fr2 C-L [N]
43.5	3899	1.9	33.79	S152	180M4	40000	19400
43.0	3949	1.0	34.22	S142	180M4	31615	18066
42.8	4000	1.6	22.88	S152	200LA6	40000	19400
37.8	4481	1.7	38.84	S152	180M4	40000	19400
37.3	4543	1.0	39.38	S142	180M4	29900	17085
36.7	4531	1.4	40.10	S153	180M4	40000	19400
36.2	4738	1.3	27.11	S152	200LA6	40000	19400
32.9	5200	1.3	29.75	S152	200LA6	40000	19400
32.8	5056	1.4	44.76	S153	180M4	40000	19400
29.0	5907	1.3	33.79	S152	200LA6	40000	19400
28.6	5805	1.4	51.38	S153	180M4	40000	19400
26.1	6371	1.3	56.39	S153	180M4	40000	19400
25.2	6789	1.2	38.84	S152	200LA6	40000	19400
22.9	7236	1.2	64.05	S153	180M4	40000	19400
20.0	8318	0.9	73.63	S153	180M4	40000	19400

22.00 kW

n2 [rpm]	M2 [Nm]	fs	i	Reductor	Motor	Fr2 D [N]	Fr2 C-L [N]
357.0	565	2.5	4.12	S142	180L4	26744	15282
320.5	629	2.5	4.59	S142	180L4	27367	15638
285.8	706	2.5	5.14	S142	180L4	28011	16007
257.4	784	3.8	5.71	S152	180L4	37840	19400
252.6	798	2.5	5.82	S142	180L4	28676	16386
241.3	844	3.2	4.06	S152	200LB6	38438	19400
238.0	856	1.7	4.12	S142	200LB6	28917	16524
236.6	852	2.5	6.21	S142	180L4	29014	16579
225.4	895	3.4	6.52	S152	180L4	39159	19400
216.2	942	3.2	4.53	S152	200LB6	39526	19400
213.7	953	1.7	4.59	S142	200LB6	29440	16823
201.9	999	3.3	7.28	S152	180L4	40000	19400
200.9	1004	1.9	7.32	S142	180L4	29801	17029
190.5	1069	1.7	5.14	S142	200LB6	29952	17116
188.3	1082	2.8	5.20	S152	200LB6	40000	19400
179.1	1126	1.9	8.21	S142	180L4	30294	17311
175.9	1147	3.1	8.36	S152	180L4	40000	19400
173.3	1164	1.3	8.48	S122	180L4	20457	5845
171.6	1187	2.6	5.71	S152	200LB6	40000	19400
168.4	1210	1.7	5.82	S142	200LB6	30440	17394
160.3	1259	3.0	9.17	S152	180L4	40000	19400
158.3	1274	1.9	9.29	S142	180L4	30756	17575
158.1	1276	1.3	9.30	S122	180L4	20797	5942
157.7	1291	1.7	6.21	S142	200LB6	30668	17524
150.2	1356	2.4	6.52	S152	200LB6	40000	19400

5.1 S MOTORREDUCTORES (50Hz)

22.00 kW

n2 [rpm]	M2 [Nm]	fs	i	Reductor	Motor	Fr2 D [N]	Fr2 C-L [N]
148.3	1360	1.9	9.91	S142	180L4	30967	17696
143.6	1405	1.2	10.24	S122	180L4	21137	6039
141.1	1430	2.9	10.42	S152	180L4	40000	19400
134.6	1513	2.3	7.28	S152	200LB6	40000	19400
133.9	1521	1.3	7.32	S142	200LB6	31124	17785
128.9	1565	1.8	11.41	S142	180L4	31327	17901
128.8	1566	1.2	11.42	S122	180L4	21493	6141
119.4	1706	1.3	8.21	S142	200LB6	31329	17902
117.9	1710	1.9	12.46	S152	180L4	40000	19400
117.3	1737	2.1	8.36	S152	200LB6	40000	19400
116.4	1732	1.3	12.63	S122	180L4	21791	6226
114.7	1758	1.5	12.81	S142	180L4	31514	18008
106.8	1907	2.1	9.17	S152	200LB6	40000	19400
106.2	1899	1.3	13.84	S122	180L4	22032	6295
105.7	1909	1.9	13.91	S152	180L4	40000	19400
105.5	1930	1.3	9.29	S142	200LB6	31423	17956
105.4	1933	0.9	9.30	S122	200LB6	21978	6279
103.0	1958	1.2	14.27	S142	180L4	31579	18045
98.9	2061	1.3	9.91	S142	200LB6	31412	17950
94.1	2166	2.0	10.42	S152	200LB6	40000	19400
92.1	2191	1.9	15.97	S152	180L4	40000	19400
91.8	2196	1.2	16.01	S142	180L4	31516	18009
86.5	2332	1.1	16.99	S122	180L4	22441	6412
85.9	2371	1.2	11.41	S142	200LB6	31223	17842
83.9	2405	1.9	17.53	S152	180L4	40000	19400
81.2	2485	1.2	18.11	S142	180L4	31271	17869
78.6	2591	1.3	12.46	S152	200LB6	40000	19400
76.5	2663	1.0	12.81	S142	200LB6	30870	17640
76.0	2653	1.2	19.33	S142	180L4	31056	17746
73.8	2731	1.9	19.91	S152	180L4	40000	19400
70.5	2891	1.3	13.91	S152	200LB6	40000	19400
69.2	2916	1.0	21.25	S122	180L4	22623	6464
66.1	3052	1.1	22.24	S142	180L4	30369	17354
65.7	3069	0.9	22.37	S122	180L4	22616	6462
64.2	3140	1.9	22.88	S152	180L4	40000	19400
63.1	3196	0.9	23.29	S122	180L4	22597	6456
61.4	3319	1.3	15.97	S152	200LB6	40000	19400
55.9	3643	1.3	17.53	S152	200LB6	40000	19400
54.2	3719	1.6	27.11	S152	180L4	40000	19400
49.4	4082	1.6	29.75	S152	180L4	40000	19400
49.2	4138	1.3	19.91	S152	200LB6	40000	19400
43.5	4636	1.6	33.79	S152	180L4	40000	19400
42.8	4756	1.3	22.88	S152	200LB6	40000	19400
37.8	5329	1.4	38.84	S152	180L4	40000	19400
36.7	5388	1.2	40.10	S153	180L4	40000	19400

5.1 S MOTORREDUCTORES (50Hz)

22.00 kW

n2 [rpm]	M2 [Nm]	fs	i	Reductor	Motor	Fr2 D [N]	Fr2 C-L [N]
36.2	5634	1.1	27.11	S152	200LB6	40000	19400
32.9	6184	1.1	29.75	S152	200LB6	40000	19400
32.8	6013	1.2	44.76	S153	180L4	40000	19400
29.0	7024	1.1	33.79	S152	200LB6	40000	19400
28.6	6903	1.1	51.38	S153	180L4	40000	19400
26.1	7577	1.1	56.39	S153	180L4	40000	19400
25.2	8074	1.0	38.84	S152	200LB6	40000	19400
22.9	8605	1.0	64.05	S153	180L4	40000	19400

30.00 kW

n2 [rpm]	M2 [Nm]	fs	i	Reductor	Motor	Fr2 D [N]	Fr2 C-L [N]
363.2	757	3.4	4.06	S152	200L4	33490	19137
358.2	768	1.8	4.12	S142	200L4	25110	14348
325.4	845	3.4	4.53	S152	200L4	34429	19400
321.6	855	1.8	4.59	S142	200L4	25549	14600
286.8	959	1.8	5.14	S142	200L4	25976	14843
283.4	970	3.0	5.20	S152	200L4	35610	19400
258.2	1065	2.8	5.71	S152	200L4	36402	19400
253.5	1085	1.8	5.82	S142	200L4	26376	15072
237.4	1159	1.8	6.21	S142	200L4	26560	15177
226.1	1216	2.5	6.52	S152	200L4	37521	19400
202.6	1358	2.4	7.28	S152	200L4	38430	19400
201.6	1365	1.4	7.32	S142	200L4	26916	15381
179.7	1530	1.4	8.21	S142	200L4	27062	15464
176.5	1558	2.3	8.36	S152	200L4	39540	19400
173.9	1582	0.9	8.48	S122	200L4	18846	5385
160.8	1710	2.2	9.17	S152	200L4	40000	19400
158.9	1731	1.4	9.29	S142	200L4	27103	15488
158.6	1734	1.0	9.30	S122	200L4	19034	5438
148.8	1849	1.4	9.91	S142	200L4	27070	15468
141.6	1943	2.2	10.42	S152	200L4	40000	19400
129.3	2127	1.3	11.41	S142	200L4	26847	15341
118.3	2324	1.4	12.46	S152	200L4	40000	19400
116.8	2354	0.9	12.63	S122	200L4	19403	5544
115.1	2389	1.1	12.81	S142	200L4	26486	15135
106.6	2581	0.9	13.84	S122	200L4	19417	5548
106.0	2594	1.4	13.91	S152	200L4	40000	19400
103.4	2661	0.9	14.27	S142	200L4	25983	14847
92.4	2978	1.4	15.97	S152	200L4	40000	19400
84.2	3268	1.4	17.53	S152	200L4	40000	19400
74.1	3712	1.4	19.91	S152	200L4	40000	19400
64.5	4267	1.4	22.88	S152	200L4	40000	19400
54.4	5054	1.2	27.11	S152	200L4	40000	19400

5.1 S MOTORREDUCTORES (50Hz)

30.00 kW

n2 [rpm]	M2 [Nm]	fs	i	Reductor	Motor	Fr2 D [N]	Fr2 C-L [N]
49.6	5547	1.2	29.75	S152	200L4	40000	19400
43.7	6301	1.2	33.79	S152	200L4	40000	19400
38.0	7242	1.1	38.84	S152	200L4	40000	19400

37.00 kW

n2 [rpm]	M2 [Nm]	fs	i	Reductor	Motor	Fr2 D [N]	Fr2 C-L [N]
365.6	928	2.8	4.06	S152	225S4	32564	18608
327.6	1035	2.8	4.53	S152	225S4	33402	19087
285.4	1189	2.5	5.20	S152	225S4	34440	19400
260.0	1305	2.3	5.71	S152	225S4	35124	19400
227.7	1490	2.1	6.52	S152	225S4	36070	19400
204.0	1663	2.0	7.28	S152	225S4	36818	19400
177.7	1909	1.8	8.36	S152	225S4	37700	19400
161.9	2095	1.8	9.17	S152	225S4	38249	19400
142.5	2380	1.8	10.42	S152	225S4	38928	19400
119.2	2847	1.2	12.46	S152	225S4	39707	19400
106.8	3177	1.2	13.91	S152	225S4	40000	19400
93.0	3648	1.2	15.97	S152	225S4	40000	19400
84.7	4004	1.2	17.53	S152	225S4	40000	19400
74.6	4547	1.2	19.91	S152	225S4	40000	19400
64.9	5227	1.2	22.88	S152	225S4	39878	19400
54.8	6192	1.0	27.11	S152	225S4	38885	19400
49.9	6796	1.0	29.75	S152	225S4	38066	19400
43.9	7719	1.0	33.79	S152	225S4	36577	19400

45.00 kW

n2 [rpm]	M2 [Nm]	fs	i	Reductor	Motor	Fr2 D [N]	Fr2 C-L [N]
365.6	1128	2.3	4.06	S152	225M4	31572	18041
327.6	1259	2.3	4.53	S152	225M4	32295	18454
285.4	1446	2.0	5.20	S152	225M4	33169	18953
260.0	1587	1.9	5.71	S152	225M4	33729	19274
227.7	1812	1.7	6.52	S152	225M4	34477	19400
204.0	2023	1.6	7.28	S152	225M4	35040	19400
177.7	2322	1.5	8.36	S152	225M4	35658	19400
161.9	2548	1.5	9.17	S152	225M4	36009	19400
142.5	2895	1.4	10.42	S152	225M4	36383	19400
119.2	3462	1.0	12.46	S152	225M4	36662	19400
106.8	3864	1.0	13.91	S152	225M4	36660	19400
93.0	4436	1.0	15.97	S152	225M4	36430	19400
84.7	4869	1.0	17.53	S152	225M4	36110	19400
74.6	5530	1.0	19.91	S152	225M4	35423	19400

5.1 S MOTORREDUCTORES (50Hz)

45.00 kW

n2 [rpm]	M2 [Nm]	fs	i	Reductor	Motor	Fr2 D [N]	Fr2 C-L [N]
64.9	6357	1.0	22.88	S152	225M4	34288	19400

5.2 IS REDUCTOR - 1750 RPM

IS052

Mn_2 [Nm]	i	Pn_1 [kW]	n2 [rpm]	Fr1 [N]	Fr2 D [N]	Fr2 C-L [N]
160	8.63	3.54	202.9	759	3125	3125
179	11.14	3.06	157.1	846	3373	3373
188	12.00	2.99	145.8	859	3428	3428
197	13.66	2.76	128.2	901	3570	3570
226	15.27	2.82	114.6	890	3584	3584
226	16.29	2.64	107.5	922	3689	3689
226	18.63	2.31	93.9	983	3916	3916
226	19.73	2.18	88.7	1007	4015	4015
244	21.04	2.22	83.2	1000	4020	4020
244	21.53	2.17	81.3	1010	4062	4062
244	24.07	1.94	72.7	1051	4267	4267
273	25.20	2.06	69.4	1028	4190	4190
273	25.79	2.02	67.9	1037	4234	4234
273	27.81	1.87	62.9	1064	4381	4381
273	30.00	1.73	58.3	1089	4532	4532
282	32.55	1.65	53.8	1104	4644	4644
282	33.00	1.63	53.0	1108	4673	4673
282	34.09	1.58	51.3	1117	4741	4741
310	36.55	1.62	47.9	1110	4725	4725
310	38.75	1.53	45.2	1127	4853	4853
329	39.90	1.57	43.9	1118	4808	4808
329	42.63	1.47	41.1	1137	4956	4956
329	46.00	1.37	38.0	1156	5131	5131
329	47.20	1.33	37.1	1163	5191	5191
329	52.25	1.20	33.5	1186	5433	5433
329	57.86	1.09	30.2	1208	5685	5685
329	59.42	1.06	29.4	1213	5752	5752
329	72.83	0.86	24.0	1249	6000	6000

IS053

Mn_2 [Nm]	i	Pn_1 [kW]	n2 [rpm]	Fr1 [N]	Fr2 D [N]	Fr2 C-L [N]
329	36.50	1.76	48.0	1091	4613	4613
329	47.14	1.36	37.1	1162	5188	5188
329	57.79	1.11	30.3	1207	5682	5682
329	63.74	1.01	27.4	1226	5931	5931
329	74.20	0.86	23.6	1251	6000	6000
329	78.14	0.82	22.4	1259	6000	6000
329	95.84	0.67	18.3	1286	6000	6000
329	117.48	0.55	14.9	1309	6000	6000
329	137.45	0.47	12.7	1323	6000	6000
329	177.55	0.36	9.9	1342	6000	6000
329	198.45	0.32	8.8	1348	6000	6000
329	217.64	0.29	8.0	1354	6000	6000

5.2 IS REDUCTOR - 1750 RPM

IS053

Mn_2 [Nm]	i	Pn_1 [kW]	n2 [rpm]	Fr1 [N]	Fr2 D [N]	Fr2 C-L [N]
329	256.33	0.25	6.8	1362	6000	6000
329	314.21	0.20	5.6	1370	6000	6000

IS062

Mn_2 [Nm]	i	Pn_1 [kW]	n2 [rpm]	Fr1 [N]	Fr2 D [N]	Fr2 C-L [N]
310	8.00	7.40	218.8	413	4832	1933
310	8.92	6.64	196.2	516	5081	2032
338	9.55	6.77	183.3	499	5061	2024
338	10.65	6.07	164.4	593	5325	2130
367	11.71	5.98	149.5	605	5385	2154
395	13.06	5.77	134.0	633	5488	2195
395	13.36	5.64	131.0	650	5548	2219
423	15.94	5.07	109.8	727	5853	2341
423	16.16	5.00	108.3	737	5892	2357
423	19.29	4.19	90.7	846	6407	2563
432	19.55	4.22	89.5	841	6388	2555
442	23.18	3.64	75.5	920	6856	2742
442	23.75	3.55	73.7	931	6934	2774
451	25.14	3.43	69.6	948	7059	2824
451	27.66	3.11	63.3	990	7376	2950
470	30.00	2.99	58.3	1007	7536	3014
508	33.93	2.86	51.6	1025	7733	3093
564	36.57	2.94	47.9	1013	7650	3060
564	39.38	2.73	44.4	1041	7927	3171
564	43.64	2.47	40.1	1077	8324	3329
564	46.10	2.34	38.0	1095	8541	3416
564	48.30	2.23	36.2	1109	8729	3492
564	53.53	2.01	32.7	1138	9154	3661
564	55.00	1.96	31.8	1146	9268	3707
564	67.47	1.60	25.9	1194	10000	4000

IS063

Mn_2 [Nm]	i	Pn_1 [kW]	n2 [rpm]	Fr1 [N]	Fr2 D [N]	Fr2 C-L [N]
564	33.57	3.28	52.1	978	7337	2935
564	37.77	2.91	46.3	1026	7770	3108
564	40.05	2.74	43.7	1047	7992	3197
564	49.13	2.24	35.6	1114	8799	3519
564	55.29	1.99	31.6	1147	9290	3716
564	58.72	1.87	29.8	1162	9548	3819
564	65.85	1.67	26.6	1189	10000	4000
564	68.25	1.61	25.6	1197	10000	4000

5.2 IS REDUCTOR - 1750 RPM

IS063

Mn_2 [Nm]	i	Pn_1 [kW]	n2 [rpm]	Fr1 [N]	Fr2 D [N]	Fr2 C-L [N]
564	73.63	1.49	23.8	1212	10000	4000
564	81.43	1.35	21.5	1231	10000	4000
564	99.89	1.10	17.5	1264	10000	4000
564	126.43	0.87	13.8	1294	10000	4000
564	150.85	0.73	11.6	1313	10000	4000
564	182.53	0.60	9.6	1330	10000	4000
564	185.05	0.59	9.5	1331	10000	4000
564	217.79	0.50	8.0	1342	10000	4000
564	267.16	0.41	6.5	1355	10000	4000

IS082

Mn_2 [Nm]	i	Pn_1 [kW]	n2 [rpm]	Fr1 [N]	Fr2 D [N]	Fr2 C-L [N]
517	7.34	13.45	238.4	1365	11156	3188
564	8.06	13.35	217.1	1376	11407	3259
611	9.94	11.73	176.0	1572	12203	3487
658	11.61	10.82	150.8	1681	12792	3655
705	12.75	10.55	137.2	1714	13109	3745
714	14.04	9.71	124.6	1816	13578	3879
724	15.43	8.95	113.4	1907	14049	4014
724	15.73	8.79	111.3	1927	14153	4044
724	17.29	7.99	101.2	2023	14680	4194
724	19.03	7.26	92.0	2111	15226	4350
724	20.14	6.86	86.9	2159	15559	4445
752	22.13	6.49	79.1	2204	16032	4580
752	24.00	5.98	72.9	2265	16535	4724
752	26.05	5.51	67.2	2322	17056	4873
846	27.29	5.92	64.1	2273	17049	4871
846	28.67	5.63	61.0	2308	17375	4964
846	29.60	5.46	59.1	2329	17588	5025
940	31.78	5.65	55.1	2306	17762	5075
940	34.91	5.14	50.1	2367	18000	5263
940	35.50	5.05	49.3	2377	18000	5297
940	40.05	4.48	43.7	2447	18000	5548
940	43.05	4.17	40.6	2484	18000	5703
940	50.25	3.57	34.8	2556	18000	6047
940	54.27	3.31	32.2	2588	18000	6226
940	61.98	2.90	28.2	2638	18000	6544

IS083

Mn_2 [Nm]	i	Pn_1 [kW]	n2 [rpm]	Fr1 [N]	Fr2 D [N]	Fr2 C-L [N]
940	67.52	2.71	25.9	2667	18000	6757

5.2 IS REDUCTOR - 1750 RPM

IS083

Mn_2 [Nm]	i	Pn_1 [kW]	n2 [rpm]	Fr1 [N]	Fr2 D [N]	Fr2 C-L [N]
940	74.18	2.47	23.6	2695	18000	6998
940	81.71	2.24	21.4	2722	18000	7200
940	91.49	2.00	19.1	2750	18000	7200
940	100.62	1.82	17.4	2772	18000	7200
940	117.17	1.56	14.9	2802	18000	7200
940	128.73	1.42	13.6	2819	18000	7200
940	136.34	1.34	12.8	2828	18000	7200
940	158.76	1.15	11.0	2851	18000	7200
940	184.88	0.99	9.5	2870	18000	7200
940	203.11	0.90	8.6	2881	18000	7200
940	205.34	0.89	8.5	2882	18000	7200
940	226.04	0.81	7.7	2891	18000	7200
940	250.50	0.73	7.0	2901	18000	7200
940	266.13	0.69	6.6	2906	18000	7200
940	292.36	0.63	6.0	2913	18000	7200
940	315.73	0.58	5.5	2919	18000	7200
940	360.58	0.51	4.8	2927	18000	7200

IS102

Mn_2 [Nm]	i	Pn_1 [kW]	n2 [rpm]	Fr1 [N]	Fr2 D [N]	Fr2 C-L [N]
799	8.06	18.92	217.1	788	14063	4018
846	8.85	18.25	197.8	865	14442	4126
893	10.88	15.66	160.8	1166	15499	4428
940	12.75	14.07	137.2	1351	16332	4666
1128	13.99	15.39	125.1	1198	16427	4694
1175	15.43	14.54	113.4	1297	16941	4840
1222	17.21	13.55	101.7	1412	17554	5015
1316	19.00	13.22	92.1	1450	17997	5142
1316	20.83	12.06	84.0	1585	18656	5330
1316	22.13	11.35	79.1	1668	19100	5457
1410	24.28	11.09	72.1	1699	19556	5588
1410	26.33	10.22	66.5	1800	20188	5768
1410	29.87	9.01	58.6	1940	21200	6057
1410	32.40	8.31	54.0	2022	21877	6250
1316	34.91	7.20	50.1	2152	22000	6502
1410	38.30	7.03	45.7	2171	22000	6665
1316	42.53	5.91	41.1	2301	22000	7005
1222	44.00	5.30	39.8	2372	22000	7165
1504	47.13	6.09	37.1	2280	22000	7141
1316	50.25	5.00	34.8	2407	22000	7457
1222	55.14	4.23	31.7	2497	22000	7789
1504	59.40	4.83	29.5	2426	22000	7796
1504	67.84	4.23	25.8	2496	22000	8196

5.2 IS REDUCTOR - 1750 RPM

IS103

Mn_2 [Nm]	i	Pn_1 [kW]	n2 [rpm]	Fr1 [N]	Fr2 D [N]	Fr2 C-L [N]
1504	74.18	3.95	23.6	2539	22000	8474
1504	81.39	3.60	21.5	2578	22000	8773
1504	89.77	3.27	19.5	2617	22000	9000
1504	100.15	2.93	17.5	2655	22000	9000
1504	110.55	2.65	15.8	2687	22000	9000
1504	121.29	2.42	14.4	2713	22000	9000
1504	128.73	2.28	13.6	2729	22000	9000
1504	141.24	2.08	12.4	2752	22000	9000
1504	173.78	1.69	10.1	2797	22000	9000
1504	188.51	1.56	9.3	2812	22000	9000
1504	203.11	1.44	8.6	2824	22000	9000
1504	222.85	1.32	7.8	2839	22000	9000
1504	224.76	1.30	7.8	2840	22000	9000
1504	274.20	1.07	6.4	2867	22000	9000
1504	280.89	1.04	6.2	2870	22000	9000
1504	292.36	1.00	6.0	2875	22000	9000
1504	320.79	0.91	5.5	2885	22000	9000
1504	345.60	0.85	5.1	2892	22000	9000
1504	394.69	0.74	4.4	2904	22000	9000

IS122

Mn_2 [Nm]	i	Pn_1 [kW]	n2 [rpm]	Fr1 [N]	Fr2 D [N]	Fr2 C-L [N]
1410	8.48	31.73	206.3	3012	18134	5181
1598	9.30	32.81	188.2	2979	18143	5184
1598	10.24	29.79	170.9	3070	18925	5407
1786	11.42	29.86	153.3	3068	19127	5465
2068	12.63	31.26	138.6	3026	18934	5410
2256	13.84	31.12	126.5	3030	19045	5441
2444	16.99	27.45	103.0	3140	20267	5791
2632	21.25	23.64	82.3	3255	21815	6233
2632	22.37	22.46	78.2	3290	22357	6388
2726	23.29	22.34	75.1	3294	22436	6410
2820	26.15	20.58	66.9	3347	23357	6674
2820	28.60	18.82	61.2	3400	24377	6965
2820	30.51	17.64	57.4	3435	25134	7181
2820	32.76	16.43	53.4	3471	25982	7423
2820	33.44	16.09	52.3	3482	26235	7496
2820	35.20	15.29	49.7	3506	26863	7675
2820	41.07	13.11	42.6	3571	28822	8235
2820	43.60	12.35	40.1	3594	29610	8460
2256	44.63	9.65	39.2	3675	30000	9160
2256	49.04	8.78	35.7	3702	30000	9526
2444	53.75	8.68	32.6	3705	30000	9690

5.2 IS REDUCTOR - 1750 RPM

IS122

Mn_2 [Nm]	i	Pn_1 [kW]	n2 [rpm]	Fr1 [N]	Fr2 D [N]	Fr2 C-L [N]
2820	66.00	8.16	26.5	3720	30000	10148

IS123

Mn_2 [Nm]	i	Pn_1 [kW]	n2 [rpm]	Fr1 [N]	Fr2 D [N]	Fr2 C-L [N]
2538	64.84	7.63	27.0	3741	30000	10376
2538	71.07	6.96	24.6	3761	30000	10780
2820	78.46	7.01	22.3	3759	30000	10923
2820	87.27	6.30	20.1	3780	30000	11200
2820	105.91	5.19	16.5	3813	30000	11200
2820	112.52	4.89	15.6	3822	30000	11200
2820	123.33	4.46	14.2	3834	30000	11200
2820	130.04	4.23	13.5	3841	30000	11200
2820	133.78	4.11	13.1	3845	30000	11200
2820	151.43	3.63	11.6	3859	30000	11200
2820	177.53	3.10	9.9	3874	30000	11200
2820	194.59	2.83	9.0	3882	30000	11200
2820	215.60	2.55	8.1	3890	30000	11200
2820	238.93	2.30	7.3	3898	30000	11200
2820	255.54	2.15	6.8	3902	30000	11200

IS142

Mn_2 [Nm]	i	Pn_1 [kW]	n2 [rpm]	Fr1 [N]	Fr2 D [N]	Fr2 C-L [N]
1306	4.12	60.53	425.0	2548	19159	10948
1455	4.59	60.57	381.6	2546	19045	10883
1633	5.14	60.61	340.2	2545	18820	10754
1846	5.82	60.56	300.7	2547	18458	10548
1973	6.21	60.62	281.7	2545	18177	10387
1801	7.32	46.97	239.2	3073	21411	12235
2020	8.21	46.97	213.2	3073	21057	12033
2286	9.29	46.99	188.5	3073	20496	11712
2441	9.91	47.00	176.5	3072	20113	11493
2647	11.41	44.30	153.4	3177	20353	11630
2463	12.81	36.69	136.6	3471	23418	13382
2294	14.27	30.68	122.6	3704	26304	15031
2493	16.01	29.73	109.3	3741	26448	15113
2820	18.11	29.73	96.6	3741	25783	14733
3011	19.33	29.73	90.5	3741	25321	14469
3116	22.24	26.74	78.7	3857	26820	15326
2722	25.26	20.57	69.3	4096	32131	18360
3053	28.33	20.57	61.8	4096	31591	18052
3454	32.05	20.57	54.6	4096	30742	17567

5.2 IS REDUCTOR - 1750 RPM

IS142

Mn_2 [Nm]	i	Pn_1 [kW]	n2 [rpm]	Fr1 [N]	Fr2 D [N]	Fr2 C-L [N]
3688	34.22	20.57	51.1	4096	30165	17237
4165	39.38	20.19	44.4	4111	29206	16689

IS143

Mn_2 [Nm]	i	Pn_1 [kW]	n2 [rpm]	Fr1 [N]	Fr2 D [N]	Fr2 C-L [N]
3772	45.77	16.07	38.2	4200	35000	18500
4202	50.97	16.07	34.3	4200	34436	18500
4450	57.17	15.17	30.6	4200	35000	18500
4488	64.68	13.53	27.1	4200	35000	18500
4584	69.06	12.94	25.3	4200	35000	18500
3979	79.45	9.76	22.0	4200	35000	18500
4174	98.81	8.23	17.7	4200	35000	18500
4450	110.05	7.88	15.9	4200	35000	18500
4469	123.44	7.06	14.2	4200	35000	18500
4550	139.64	6.35	12.5	4200	35000	18500
4499	149.10	5.88	11.7	4200	35000	18500
3573	157.49	4.42	11.1	4200	35000	18500
4389	171.55	4.99	10.2	4200	35000	18500
3980	175.41	4.42	10.0	4200	35000	18500
4464	196.74	4.42	8.9	4200	35000	18500
4432	222.57	3.88	7.9	4200	35000	18500
4589	237.63	3.76	7.4	4200	35000	18500
4504	273.41	3.21	6.4	4200	35000	18500

IS152

Mn_2 [Nm]	i	Pn_1 [kW]	n2 [rpm]	Fr1 [N]	Fr2 D [N]	Fr2 C-L [N]
2419	4.06	113.68	430.9	2971	23230	13274
2699	4.53	113.65	386.1	2972	23144	13225
2739	5.20	100.47	336.3	3282	24645	14083
2765	5.71	92.42	306.4	3471	25706	14689
2891	6.52	84.58	268.3	3656	26853	15345
3063	7.28	80.32	240.4	3756	27516	15724
3319	8.36	75.81	209.4	3862	28240	16137
3526	9.17	73.37	190.8	3919	28610	16349
3931	10.42	72.02	168.0	3951	28583	16333
3107	12.46	47.59	140.4	4525	35582	19400
3467	13.91	47.57	125.8	4526	35686	19400
3980	15.97	47.58	109.6	4526	35607	19400
4369	17.53	47.59	99.8	4525	35408	19400
4963	19.91	47.59	87.9	4525	34919	19400
5706	22.88	47.60	76.5	4525	34041	19400

5.2 IS REDUCTOR - 1750 RPM

IS152

Mn_2 [Nm]	i	Pn_1 [kW]	n2 [rpm]	Fr1 [N]	Fr2 D [N]	Fr2 C-L [N]
5724	27.11	40.31	64.6	4697	37532	19400
6284	29.75	40.32	58.8	4696	36818	19400
7137	33.79	40.32	51.8	4696	35512	19400
7228	38.84	35.52	45.1	4809	38394	19400

IS153

Mn_2 [Nm]	i	Pn_1 [kW]	n2 [rpm]	Fr1 [N]	Fr2 D [N]	Fr2 C-L [N]
5905	40.10	28.70	43.6	4984	40000	19400
6589	44.76	28.70	39.1	4984	40000	19400
7393	51.38	28.05	34.1	4999	40000	19400
7759	56.39	26.82	31.0	5027	40000	19400
8268	64.05	25.16	27.3	5065	40000	19400
7313	73.63	19.36	23.8	5199	40000	19400
6679	87.16	14.94	20.1	5200	40000	19400
7455	97.27	14.94	18.0	5200	40000	19400
8558	111.67	14.94	15.7	5200	40000	19400
8964	122.57	14.26	14.3	5200	40000	19400
8593	139.21	12.03	12.6	5200	40000	19400
6701	154.02	8.48	11.4	5200	40000	19400
7599	160.02	9.26	10.9	5200	40000	19400
7693	176.81	8.48	9.9	5200	40000	19400
8443	194.06	8.48	9.0	5200	40000	19400
8792	220.42	7.78	7.9	5200	40000	19400
7782	253.36	5.99	6.9	5200	40000	19400

5.3 IS REDUCTOR - 1400 RPM

IS052

Mn_2 [Nm]	i	Pn_1 [kW]	n2 [rpm]	Fr1 [N]	Fr2 D [N]	Fr2 C-L [N]
170	8.63	3.01	162.3	718	3375	3375
190	11.14	2.60	125.7	810	3644	3644
200	12.00	2.55	116.7	824	3703	3703
210	13.66	2.35	102.5	869	3857	3857
240	15.27	2.40	91.7	857	3874	3874
240	16.29	2.25	86.0	891	3987	3987
240	18.63	1.97	75.1	956	4231	4231
240	19.73	1.86	71.0	981	4338	4338
260	21.04	1.89	66.5	974	4345	4345
260	21.53	1.84	65.0	984	4390	4390
260	24.07	1.65	58.2	1029	4611	4611
290	25.20	1.76	55.6	1004	4530	4530
290	25.79	1.72	54.3	1013	4578	4578
290	27.81	1.59	50.3	1042	4736	4736
290	30.00	1.48	46.7	1069	4898	4898
300	32.55	1.41	43.0	1084	5020	5020
300	33.00	1.39	42.4	1089	5051	5051
300	34.09	1.34	41.1	1099	5124	5124
330	36.55	1.38	38.3	1091	5109	5109
330	38.75	1.30	36.1	1109	5246	5246
350	39.90	1.34	35.1	1100	5200	5200
350	42.63	1.25	32.8	1119	5359	5359
350	46.00	1.16	30.4	1140	5547	5547
350	47.20	1.13	29.7	1147	5612	5612
350	52.25	1.02	26.8	1172	5873	5873
350	57.86	0.92	24.2	1195	6000	6000
350	59.42	0.90	23.6	1201	6000	6000
350	72.83	0.73	19.2	1238	6000	6000

IS053

Mn_2 [Nm]	i	Pn_1 [kW]	n2 [rpm]	Fr1 [N]	Fr2 D [N]	Fr2 C-L [N]
350	36.50	1.50	38.4	1071	4990	4990
350	47.14	1.16	29.7	1147	5609	5609
350	57.79	0.94	24.2	1195	6000	6000
350	63.74	0.86	22.0	1214	6000	6000
350	74.20	0.74	18.9	1242	6000	6000
350	78.14	0.70	17.9	1250	6000	6000
350	95.84	0.57	14.6	1279	6000	6000
350	117.48	0.46	11.9	1302	6000	6000
350	137.45	0.40	10.2	1317	6000	6000
350	177.55	0.31	7.9	1338	6000	6000
350	198.45	0.28	7.0	1345	6000	6000
350	217.64	0.25	6.4	1350	6000	6000

5.3 IS REDUCTOR - 1400 RPM

IS053

Mn_2 [Nm]	i	Pn_1 [kW]	n2 [rpm]	Fr1 [N]	Fr2 D [N]	Fr2 C-L [N]
350	256.33	0.21	5.5	1359	6000	6000
350	314.21	0.17	4.5	1367	6000	6000

IS062

Mn_2 [Nm]	i	Pn_1 [kW]	n2 [rpm]	Fr1 [N]	Fr2 D [N]	Fr2 C-L [N]
330	8.00	6.30	175.0	350	5225	2090
330	8.92	5.65	156.9	459	5494	2197
360	9.55	5.76	146.7	441	5474	2190
360	10.65	5.16	131.5	541	5759	2303
390	11.71	5.09	119.6	554	5825	2330
420	13.06	4.91	107.2	583	5939	2376
420	13.36	4.80	104.8	602	6004	2401
450	15.94	4.31	87.8	684	6334	2533
450	16.16	4.25	86.6	694	6376	2551
450	19.29	3.56	72.6	810	6930	2772
460	19.55	3.59	71.6	805	6911	2764
470	23.18	3.10	60.4	888	7415	2966
470	23.75	3.02	59.0	901	7499	3000
480	25.14	2.92	55.7	919	7635	3054
480	27.66	2.65	50.6	963	7976	3190
500	30.00	2.55	46.7	981	8149	3260
540	33.93	2.43	41.3	1000	8364	3346
600	36.57	2.51	38.3	988	8280	3312
600	39.38	2.33	35.6	1018	8578	3431
600	43.64	2.10	32.1	1056	9005	3602
600	46.10	1.99	30.4	1075	9239	3695
600	48.30	1.90	29.0	1090	9441	3776
600	53.53	1.71	26.1	1121	9898	3959
600	55.00	1.67	25.4	1129	10000	4000
600	67.47	1.36	20.8	1181	10000	4000

IS063

Mn_2 [Nm]	i	Pn_1 [kW]	n2 [rpm]	Fr1 [N]	Fr2 D [N]	Fr2 C-L [N]
600	33.57	2.79	41.7	950	7943	3177
600	37.77	2.48	37.1	1001	8409	3364
600	40.05	2.34	35.0	1024	8648	3459
600	49.13	1.90	28.5	1095	9516	3806
600	55.29	1.69	25.3	1130	10000	4000
600	58.72	1.59	23.8	1147	10000	4000
600	65.85	1.42	21.3	1175	10000	4000
600	68.25	1.37	20.5	1183	10000	4000

5.3 IS REDUCTOR - 1400 RPM

IS063

Mn_2 [Nm]	i	Pn_1 [kW]	n2 [rpm]	Fr1 [N]	Fr2 D [N]	Fr2 C-L [N]
600	73.63	1.27	19.0	1200	10000	4000
600	81.43	1.15	17.2	1220	10000	4000
600	99.89	0.94	14.0	1255	10000	4000
600	126.43	0.74	11.1	1287	10000	4000
600	150.85	0.62	9.3	1307	10000	4000
600	182.53	0.51	7.7	1324	10000	4000
600	185.05	0.51	7.6	1326	10000	4000
600	217.79	0.43	6.4	1338	10000	4000
600	267.16	0.35	5.2	1351	10000	4000

IS082

Mn_2 [Nm]	i	Pn_1 [kW]	n2 [rpm]	Fr1 [N]	Fr2 D [N]	Fr2 C-L [N]
550	7.34	11.44	190.8	1261	12030	3437
600	8.06	11.36	173.6	1273	12302	3515
650	9.94	9.98	140.8	1482	13161	3760
700	11.61	9.21	120.6	1598	13797	3942
750	12.75	8.98	109.8	1632	14140	4040
760	14.04	8.26	99.7	1741	14645	4184
770	15.43	7.62	90.7	1838	15153	4329
770	15.73	7.48	89.0	1859	15264	4361
770	17.29	6.80	81.0	1962	15832	4523
770	19.03	6.18	73.6	2055	16420	4691
770	20.14	5.84	69.5	2107	16778	4794
800	22.13	5.52	63.3	2154	17288	4939
800	24.00	5.09	58.3	2219	17830	5094
800	26.05	4.69	53.8	2280	18000	5254
900	27.29	5.04	51.3	2228	18000	5253
900	28.67	4.79	48.8	2264	18000	5354
900	29.60	4.64	47.3	2287	18000	5419
1000	31.78	4.81	44.1	2262	18000	5474
1000	34.91	4.37	40.1	2327	18000	5676
1000	35.50	4.30	39.4	2338	18000	5713
1000	40.05	3.81	35.0	2412	18000	5983
1000	43.05	3.55	32.5	2452	18000	6150
1000	50.25	3.04	27.9	2529	18000	6521
1000	54.27	2.81	25.8	2563	18000	6712
1000	61.98	2.46	22.6	2616	18000	7055

IS083

Mn_2 [Nm]	i	Pn_1 [kW]	n2 [rpm]	Fr1 [N]	Fr2 D [N]	Fr2 C-L [N]
1000	67.52	2.31	20.7	2646	18000	7200

5.3 IS REDUCTOR - 1400 RPM

IS083

Mn_2 [Nm]	i	Pn_1 [kW]	n2 [rpm]	Fr1 [N]	Fr2 D [N]	Fr2 C-L [N]
1000	74.18	2.10	18.9	2677	18000	7200
1000	81.71	1.91	17.1	2705	18000	7200
1000	91.49	1.70	15.3	2735	18000	7200
1000	100.62	1.55	13.9	2758	18000	7200
1000	117.17	1.33	11.9	2791	18000	7200
1000	128.73	1.21	10.9	2808	18000	7200
1000	136.34	1.14	10.3	2818	18000	7200
1000	158.76	0.98	8.8	2842	18000	7200
1000	184.88	0.84	7.6	2863	18000	7200
1000	203.11	0.77	6.9	2874	18000	7200
1000	205.34	0.76	6.8	2875	18000	7200
1000	226.04	0.69	6.2	2885	18000	7200
1000	250.50	0.62	5.6	2895	18000	7200
1000	266.13	0.59	5.3	2901	18000	7200
1000	292.36	0.53	4.8	2908	18000	7200
1000	315.73	0.49	4.4	2914	18000	7200
1000	360.58	0.43	3.9	2923	18000	7200

IS102

Mn_2 [Nm]	i	Pn_1 [kW]	n2 [rpm]	Fr1 [N]	Fr2 D [N]	Fr2 C-L [N]
850	8.06	16.10	173.6	647	15163	4332
900	8.85	15.54	158.3	729	15574	4450
950	10.88	13.33	128.6	1050	16712	4775
1000	12.75	11.98	109.8	1247	17610	5032
1200	13.99	13.10	100.1	1084	17719	5063
1250	15.43	12.37	90.7	1189	18274	5221
1300	17.21	11.53	81.3	1311	18935	5410
1400	19.00	11.25	73.7	1352	19415	5547
1400	20.83	10.26	67.2	1496	20125	5750
1400	22.13	9.66	63.3	1583	20603	5886
1500	24.28	9.44	57.7	1616	21097	6028
1500	26.33	8.70	53.2	1724	21777	6222
1500	29.87	7.67	46.9	1873	22000	6533
1500	32.40	7.07	43.2	1961	22000	6741
1400	34.91	6.12	40.1	2098	22000	7011
1500	38.30	5.98	36.5	2119	22000	7187
1400	42.53	5.03	32.9	2258	22000	7553
1300	44.00	4.51	31.8	2333	22000	7724
1600	47.13	5.18	29.7	2235	22000	7701
1400	50.25	4.25	27.9	2370	22000	8039
1300	55.14	3.60	25.4	2465	22000	8396
1600	59.40	4.11	23.6	2391	22000	8406
1600	67.84	3.60	20.6	2465	22000	8836

5.3 IS REDUCTOR - 1400 RPM

IS103

Mn_2 [Nm]	i	Pn_1 [kW]	n2 [rpm]	Fr1 [N]	Fr2 D [N]	Fr2 C-L [N]
1600	74.18	3.36	18.9	2510	22000	9000
1600	81.39	3.07	17.2	2552	22000	9000
1600	89.77	2.78	15.6	2593	22000	9000
1600	100.15	2.49	14.0	2634	22000	9000
1600	110.55	2.26	12.7	2667	22000	9000
1600	121.29	2.06	11.5	2696	22000	9000
1600	128.73	1.94	10.9	2713	22000	9000
1600	141.24	1.77	9.9	2737	22000	9000
1600	173.78	1.44	8.1	2784	22000	9000
1600	188.51	1.32	7.4	2800	22000	9000
1600	203.11	1.23	6.9	2814	22000	9000
1600	222.85	1.12	6.3	2829	22000	9000
1600	224.76	1.11	6.2	2831	22000	9000
1600	274.20	0.91	5.1	2859	22000	9000
1600	280.89	0.89	5.0	2862	22000	9000
1600	292.36	0.85	4.8	2867	22000	9000
1600	320.79	0.78	4.4	2878	22000	9000
1600	345.60	0.72	4.0	2886	22000	9000
1600	394.69	0.63	3.5	2899	22000	9000

IS122

Mn_2 [Nm]	i	Pn_1 [kW]	n2 [rpm]	Fr1 [N]	Fr2 D [N]	Fr2 C-L [N]
1500	8.48	27.00	165.1	2951	19587	5596
1700	9.30	27.92	150.6	2916	19606	5602
1700	10.24	25.36	136.7	3013	20448	5842
1900	11.42	25.41	122.6	3010	20674	5907
2200	12.63	26.61	110.9	2966	20480	5851
2400	13.84	26.48	101.2	2970	20608	5888
2600	16.99	23.36	82.4	3087	21932	6266
2800	21.25	20.12	65.9	3209	23608	6745
2800	22.37	19.12	62.6	3247	24191	6912
2900	23.29	19.01	60.1	3251	24280	6937
3000	26.15	17.52	53.5	3307	25277	7222
3000	28.60	16.02	49.0	3364	26374	7535
3000	30.51	15.01	45.9	3401	27189	7768
3000	32.76	13.99	42.7	3440	28102	8029
3000	33.44	13.70	41.9	3451	28374	8107
3000	35.20	13.01	39.8	3476	29050	8300
3000	41.07	11.16	34.1	3546	30000	8903
3000	43.60	10.51	32.1	3571	30000	9145
2400	44.63	8.21	31.4	3657	30000	9890
2400	49.04	7.47	28.6	3685	30000	10285
2600	53.75	7.39	26.1	3688	30000	10464

5.3 IS REDUCTOR - 1400 RPM

IS122

Mn_2 [Nm]	i	Pn_1 [kW]	n2 [rpm]	Fr1 [N]	Fr2 D [N]	Fr2 C-L [N]
3000	66.00	6.94	21.2	3705	30000	10962

IS123

Mn_2 [Nm]	i	Pn_1 [kW]	n2 [rpm]	Fr1 [N]	Fr2 D [N]	Fr2 C-L [N]
2700	64.84	6.49	21.6	3727	30000	11200
2700	71.07	5.92	19.7	3748	30000	11200
3000	78.46	5.96	17.8	3746	30000	11200
3000	87.27	5.36	16.0	3768	30000	11200
3000	105.91	4.42	13.2	3803	30000	11200
3000	112.52	4.16	12.4	3813	30000	11200
3000	123.33	3.79	11.3	3826	30000	11200
3000	130.04	3.60	10.8	3833	30000	11200
3000	133.78	3.50	10.5	3837	30000	11200
3000	151.43	3.09	9.2	3852	30000	11200
3000	177.53	2.64	7.9	3869	30000	11200
3000	194.59	2.40	7.2	3877	30000	11200
3000	215.60	2.17	6.5	3886	30000	11200
3000	238.93	1.96	5.9	3894	30000	11200
3000	255.54	1.83	5.5	3898	30000	11200

IS142

Mn_2 [Nm]	i	Pn_1 [kW]	n2 [rpm]	Fr1 [N]	Fr2 D [N]	Fr2 C-L [N]
1389	4.12	51.51	340.0	2398	20752	11858
1548	4.59	51.55	305.3	2397	20645	11797
1737	5.14	51.58	272.2	2395	20421	11669
1964	5.82	51.54	240.6	2397	20052	11458
2099	6.21	51.59	225.3	2395	19762	11293
1915	7.32	39.97	191.3	2957	23226	13272
2149	8.21	39.98	170.6	2957	22867	13067
2432	9.29	39.99	150.8	2956	22289	12736
2597	9.91	40.00	141.2	2956	21893	12510
2816	11.41	37.70	122.7	3067	22171	12669
2620	12.81	31.23	109.3	3381	25452	14544
2440	14.27	26.11	98.1	3628	28542	16309
2652	16.01	25.30	87.5	3668	28716	16409
3000	18.11	25.30	77.3	3668	28033	16019
3204	19.33	25.30	72.4	3667	27555	15746
3315	22.24	22.76	62.9	3791	29179	16674
2896	25.26	17.51	55.4	4045	34856	18500
3248	28.33	17.50	49.4	4045	34308	18500
3674	32.05	17.50	43.7	4045	33434	18500

5.3 IS REDUCTOR - 1400 RPM

IS142

Mn_2 [Nm]	i	Pn_1 [kW]	n2 [rpm]	Fr1 [N]	Fr2 D [N]	Fr2 C-L [N]
3923	34.22	17.50	40.9	4045	32836	18500
4431	39.38	17.18	35.6	4061	31852	18201

IS143

Mn_2 [Nm]	i	Pn_1 [kW]	n2 [rpm]	Fr1 [N]	Fr2 D [N]	Fr2 C-L [N]
4013	45.77	13.67	30.6	4200	35000	18500
4470	50.97	13.68	27.5	4200	35000	18500
4735	57.17	12.91	24.5	4200	35000	18500
4774	64.68	11.51	21.6	4200	35000	18500
4876	69.06	11.01	20.3	4200	35000	18500
4233	79.45	8.31	17.6	4200	35000	18500
4440	98.81	7.01	14.2	4200	35000	18500
4734	110.05	6.71	12.7	4200	35000	18500
4754	123.44	6.01	11.3	4200	35000	18500
4841	139.64	5.41	10.0	4200	35000	18500
4786	149.10	5.01	9.4	4200	35000	18500
3801	157.49	3.76	8.9	4200	35000	18500
4669	171.55	4.24	8.2	4200	35000	18500
4234	175.41	3.76	8.0	4200	35000	18500
4749	196.74	3.76	7.1	4200	35000	18500
4715	222.57	3.30	6.3	4200	35000	18500
4882	237.63	3.20	5.9	4200	35000	18500
4792	273.41	2.73	5.1	4200	35000	18500

IS152

Mn_2 [Nm]	i	Pn_1 [kW]	n2 [rpm]	Fr1 [N]	Fr2 D [N]	Fr2 C-L [N]
2573	4.06	96.75	344.7	2801	25156	14375
2871	4.53	96.72	308.9	2802	25081	14332
2914	5.20	85.51	269.0	3131	26699	15256
2942	5.71	78.66	245.1	3333	27843	15910
3075	6.52	71.99	214.6	3529	29085	16620
3259	7.28	68.36	192.3	3635	29810	17034
3531	8.36	64.52	167.5	3748	30605	17488
3751	9.17	62.44	152.6	3809	31016	17723
4182	10.42	61.29	134.4	3843	31012	17721
3306	12.46	40.50	112.3	4454	38494	19400
3688	13.91	40.49	100.7	4454	38629	19400
4234	15.97	40.49	87.7	4454	38576	19400
4648	17.53	40.50	79.9	4454	38385	19400
5280	19.91	40.50	70.3	4454	37896	19400
6070	22.88	40.51	61.2	4454	36997	19400

5.3 IS REDUCTOR - 1400 RPM

IS152

Mn_2 [Nm]	i	Pn_1 [kW]	n2 [rpm]	Fr1 [N]	Fr2 D [N]	Fr2 C-L [N]
6089	27.11	34.30	51.6	4636	40000	19400
6685	29.75	34.31	47.1	4636	40000	19400
7592	33.79	34.31	41.4	4636	38670	19400
7689	38.84	30.23	36.0	4756	40000	19400

IS153

Mn_2 [Nm]	i	Pn_1 [kW]	n2 [rpm]	Fr1 [N]	Fr2 D [N]	Fr2 C-L [N]
6281	40.10	24.43	34.9	4941	40000	19400
7010	44.76	24.43	31.3	4941	40000	19400
7865	51.38	23.87	27.2	4957	40000	19400
8254	56.39	22.83	24.8	4987	40000	19400
8795	64.05	21.41	21.9	5028	40000	19400
7779	73.63	16.48	19.0	5170	40000	19400
7105	87.16	12.71	16.1	5200	40000	19400
7931	97.27	12.71	14.4	5200	40000	19400
9104	111.67	12.71	12.5	5200	40000	19400
9536	122.57	12.13	11.4	5200	40000	19400
9142	139.21	10.24	10.1	5200	40000	19400
7129	154.02	7.22	9.1	5200	40000	19400
8084	160.02	7.88	8.8	5200	40000	19400
8184	176.81	7.22	7.9	5200	40000	19400
8982	194.06	7.22	7.2	5200	40000	19400
9353	220.42	6.62	6.3	5200	40000	19400
8279	253.36	5.10	5.5	5200	40000	19400

5.4 IS REDUCTOR - 1140 RPM

IS052

Mn_2 [Nm]	i	Pn_1 [kW]	n2 [rpm]	Fr1 [N]	Fr2 D [N]	Fr2 C-L [N]
174	8.63	2.51	132.2	700	3657	3657
195	11.14	2.17	102.3	795	3949	3949
205	12.00	2.12	95.0	809	4016	4016
215	13.66	1.96	83.5	855	4183	4183
246	15.27	2.00	74.6	843	4209	4209
246	16.29	1.88	70.0	878	4330	4330
246	18.63	1.64	61.2	945	4591	4591
246	19.73	1.55	57.8	971	4706	4706
267	21.04	1.58	54.2	964	4718	4718
267	21.53	1.54	53.0	974	4766	4766
267	24.07	1.38	47.4	1019	5003	5003
297	25.20	1.47	45.2	994	4924	4924
297	25.79	1.43	44.2	1003	4975	4975
297	27.81	1.33	41.0	1033	5144	5144
297	30.00	1.23	38.0	1060	5318	5318
308	32.55	1.17	35.0	1076	5451	5451
308	33.00	1.16	34.5	1081	5484	5484
308	34.09	1.12	33.4	1091	5562	5562
338	36.55	1.15	31.2	1083	5554	5554
338	38.75	1.09	29.4	1101	5701	5701
359	39.90	1.12	28.6	1092	5656	5656
359	42.63	1.05	26.7	1112	5827	5827
359	46.00	0.97	24.8	1134	6000	6000
359	47.20	0.95	24.1	1141	6000	6000
359	52.25	0.85	21.8	1166	6000	6000
359	57.86	0.77	19.7	1190	6000	6000
359	59.42	0.75	19.2	1195	6000	6000
359	72.83	0.61	15.7	1234	6000	6000

IS053

Mn_2 [Nm]	i	Pn_1 [kW]	n2 [rpm]	Fr1 [N]	Fr2 D [N]	Fr2 C-L [N]
359	36.50	1.25	31.2	1063	5432	5432
359	47.14	0.97	24.2	1140	6000	6000
359	57.79	0.79	19.7	1189	6000	6000
359	63.74	0.71	17.9	1210	6000	6000
359	74.20	0.61	15.4	1237	6000	6000
359	78.14	0.58	14.6	1246	6000	6000
359	95.84	0.48	11.9	1276	6000	6000
359	117.48	0.39	9.7	1300	6000	6000
359	137.45	0.33	8.3	1315	6000	6000
359	177.55	0.26	6.4	1336	6000	6000
359	198.45	0.23	5.7	1343	6000	6000
359	217.64	0.21	5.2	1349	6000	6000

5.4 IS REDUCTOR - 1140 RPM

IS053

Mn_2 [Nm]	i	Pn_1 [kW]	n2 [rpm]	Fr1 [N]	Fr2 D [N]	Fr2 C-L [N]
359	256.33	0.18	4.5	1357	6000	6000
359	314.21	0.14	3.6	1367	6000	6000

IS062

Mn_2 [Nm]	i	Pn_1 [kW]	n2 [rpm]	Fr1 [N]	Fr2 D [N]	Fr2 C-L [N]
338	8.00	5.26	142.5	323	5686	2275
338	8.92	4.71	127.8	435	5973	2389
369	9.55	4.81	119.4	416	5962	2385
369	10.65	4.31	107.1	519	6266	2506
400	11.71	4.25	97.4	532	6346	2538
431	13.06	4.10	87.3	562	6476	2590
431	13.36	4.01	85.3	581	6545	2618
461	15.94	3.60	71.5	666	6907	2763
461	16.16	3.55	70.5	676	6952	2781
461	19.29	2.97	59.1	795	7545	3018
472	19.55	3.00	58.3	790	7527	3011
482	23.18	2.58	49.2	875	8070	3228
482	23.75	2.52	48.0	888	8160	3264
492	25.14	2.43	45.3	906	8308	3323
492	27.66	2.21	41.2	952	8673	3469
513	30.00	2.12	38.0	970	8864	3545
554	33.93	2.03	33.6	990	9105	3642
615	36.57	2.09	31.2	977	9032	3613
615	39.38	1.94	28.9	1008	9351	3740
615	43.64	1.75	26.1	1047	9808	3923
615	46.10	1.66	24.7	1066	10000	4000
615	48.30	1.58	23.6	1082	10000	4000
615	53.53	1.43	21.3	1114	10000	4000
615	55.00	1.39	20.7	1122	10000	4000
615	67.47	1.13	16.9	1175	10000	4000

IS063

Mn_2 [Nm]	i	Pn_1 [kW]	n2 [rpm]	Fr1 [N]	Fr2 D [N]	Fr2 C-L [N]
615	33.57	2.33	34.0	939	8672	3469
615	37.77	2.07	30.2	991	9171	3668
615	40.05	1.95	28.5	1015	9426	3770
615	49.13	1.59	23.2	1088	10000	4000
615	55.29	1.41	20.6	1123	10000	4000
615	58.72	1.33	19.4	1140	10000	4000
615	65.85	1.19	17.3	1169	10000	4000
615	68.25	1.14	16.7	1178	10000	4000

5.4 IS REDUCTOR - 1140 RPM

IS063

Mn_2 [Nm]	i	Pn_1 [kW]	n2 [rpm]	Fr1 [N]	Fr2 D [N]	Fr2 C-L [N]
615	73.63	1.06	15.5	1194	10000	4000
615	81.43	0.96	14.0	1215	10000	4000
615	99.89	0.78	11.4	1251	10000	4000
615	126.43	0.62	9.0	1284	10000	4000
615	150.85	0.52	7.6	1304	10000	4000
615	182.53	0.43	6.2	1322	10000	4000
615	185.05	0.42	6.2	1324	10000	4000
615	217.79	0.36	5.2	1336	10000	4000
615	267.16	0.29	4.3	1350	10000	4000

IS082

Mn_2 [Nm]	i	Pn_1 [kW]	n2 [rpm]	Fr1 [N]	Fr2 D [N]	Fr2 C-L [N]
564	7.34	9.55	155.3	1218	12956	3702
615	8.06	9.48	141.4	1230	13254	3787
666	9.94	8.33	114.6	1444	14180	4052
718	11.61	7.69	98.2	1563	14869	4248
769	12.75	7.50	89.4	1599	15243	4355
779	14.04	6.90	81.2	1710	15785	4510
789	15.43	6.36	73.9	1809	16330	4666
789	15.73	6.24	72.5	1831	16449	4700
789	17.29	5.67	65.9	1936	17056	4873
789	19.03	5.16	59.9	2032	17686	5053
789	20.14	4.87	56.6	2085	18000	5163
820	22.13	4.61	51.5	2134	18000	5320
820	24.00	4.25	47.5	2200	18000	5485
820	26.05	3.91	43.8	2262	18000	5657
923	27.29	4.20	41.8	2209	18000	5660
923	28.67	4.00	39.8	2246	18000	5767
923	29.60	3.88	38.5	2269	18000	5837
1025	31.78	4.01	35.9	2244	18000	5900
1025	34.91	3.65	32.7	2311	18000	6116
1025	35.50	3.59	32.1	2322	18000	6156
1025	40.05	3.18	28.5	2398	18000	6445
1025	43.05	2.96	26.5	2439	18000	6624
1025	50.25	2.54	22.7	2517	18000	7020
1025	54.27	2.35	21.0	2552	18000	7200
1025	61.98	2.06	18.4	2606	18000	7200

IS083

Mn_2 [Nm]	i	Pn_1 [kW]	n2 [rpm]	Fr1 [N]	Fr2 D [N]	Fr2 C-L [N]
1025	67.52	1.93	16.9	2638	18000	7200

5.4 IS REDUCTOR - 1140 RPM

IS083

Mn_2 [Nm]	i	Pn_1 [kW]	n2 [rpm]	Fr1 [N]	Fr2 D [N]	Fr2 C-L [N]
1025	74.18	1.75	15.4	2669	18000	7200
1025	81.71	1.59	13.9	2698	18000	7200
1025	91.49	1.42	12.5	2729	18000	7200
1025	100.62	1.29	11.3	2753	18000	7200
1025	117.17	1.11	9.7	2786	18000	7200
1025	128.73	1.01	8.9	2804	18000	7200
1025	136.34	0.95	8.4	2814	18000	7200
1025	158.76	0.82	7.2	2838	18000	7200
1025	184.88	0.70	6.2	2859	18000	7200
1025	203.11	0.64	5.6	2871	18000	7200
1025	205.34	0.63	5.5	2872	18000	7200
1025	226.04	0.58	5.0	2883	18000	7200
1025	250.50	0.52	4.5	2893	18000	7200
1025	266.13	0.49	4.3	2898	18000	7200
1025	292.36	0.45	3.9	2906	18000	7200
1025	315.73	0.41	3.6	2912	18000	7200
1025	360.58	0.36	3.2	2922	18000	7200

IS102

Mn_2 [Nm]	i	Pn_1 [kW]	n2 [rpm]	Fr1 [N]	Fr2 D [N]	Fr2 C-L [N]
871	8.06	13.44	141.4	589	16327	4665
923	8.85	12.97	128.9	673	16772	4792
974	10.88	11.12	104.7	1002	17996	5142
1025	12.75	10.00	89.4	1203	18963	5418
1230	13.99	10.93	81.5	1036	19103	5458
1281	15.43	10.33	73.9	1144	19702	5629
1333	17.21	9.63	66.2	1269	20416	5833
1435	19.00	9.39	60.0	1311	20941	5983
1435	20.83	8.57	54.7	1459	21700	6200
1435	22.13	8.06	51.5	1548	22000	6346
1538	24.28	7.88	47.0	1582	22000	6501
1538	26.33	7.26	43.3	1692	22000	6709
1538	29.87	6.40	38.2	1845	22000	7042
1538	32.40	5.90	35.2	1935	22000	7264
1435	34.91	5.11	32.7	2076	22000	7550
1538	38.30	4.99	29.8	2097	22000	7742
1435	42.53	4.20	26.8	2239	22000	8129
1333	44.00	3.77	25.9	2316	22000	8309
1640	47.13	4.33	24.2	2216	22000	8295
1435	50.25	3.55	22.7	2355	22000	8650
1333	55.14	3.01	20.7	2452	22000	9000
1640	59.40	3.43	19.2	2376	22000	9000
1640	67.84	3.01	16.8	2452	22000	9000

5.4 IS REDUCTOR - 1140 RPM

IS103

Mn_2 [Nm]	i	Pn_1 [kW]	n2 [rpm]	Fr1 [N]	Fr2 D [N]	Fr2 C-L [N]
1640	74.18	2.81	15.4	2498	22000	9000
1640	81.39	2.56	14.0	2541	22000	9000
1640	89.77	2.32	12.7	2583	22000	9000
1640	100.15	2.08	11.4	2625	22000	9000
1640	110.55	1.88	10.3	2659	22000	9000
1640	121.29	1.72	9.4	2689	22000	9000
1640	128.73	1.62	8.9	2706	22000	9000
1640	141.24	1.47	8.1	2731	22000	9000
1640	173.78	1.20	6.6	2779	22000	9000
1640	188.51	1.10	6.0	2796	22000	9000
1640	203.11	1.03	5.6	2810	22000	9000
1640	222.85	0.93	5.1	2825	22000	9000
1640	224.76	0.93	5.1	2827	22000	9000
1640	274.20	0.76	4.2	2856	22000	9000
1640	280.89	0.74	4.1	2859	22000	9000
1640	292.36	0.71	3.9	2864	22000	9000
1640	320.79	0.65	3.5	2875	22000	9000
1640	345.60	0.60	3.3	2883	22000	9000
1640	394.69	0.53	2.9	2897	22000	9000

IS122

Mn_2 [Nm]	i	Pn_1 [kW]	n2 [rpm]	Fr1 [N]	Fr2 D [N]	Fr2 C-L [N]
1538	8.48	22.54	134.4	2925	21217	6062
1743	9.30	23.30	122.6	2890	21272	6078
1743	10.24	21.16	111.3	2989	22173	6335
1948	11.42	21.21	99.9	2987	22449	6414
2255	12.63	22.21	90.3	2941	22293	6369
2460	13.84	22.10	82.4	2945	22464	6418
2665	16.99	19.50	67.1	3066	23915	6833
2870	21.25	16.79	53.6	3190	25743	7355
2870	22.37	15.96	51.0	3229	26367	7533
2973	23.29	15.87	48.9	3233	26480	7566
3075	26.15	14.62	43.6	3291	27563	7875
3075	28.60	13.37	39.9	3349	28737	8211
3075	30.51	12.53	37.4	3387	29609	8460
3075	32.76	11.67	34.8	3427	30000	8739
3075	33.44	11.43	34.1	3438	30000	8822
3075	35.20	10.86	32.4	3464	30000	9029
3075	41.07	9.31	27.8	3536	30000	9674
3075	43.60	8.77	26.1	3561	30000	9933
2460	44.63	6.85	25.5	3649	30000	10701
2460	49.04	6.24	23.2	3678	30000	11123
2665	53.75	6.17	21.2	3681	30000	11200

5.4 IS REDUCTOR - 1140 RPM

IS122

Mn_2 [Nm]	i	Pn_1 [kW]	n2 [rpm]	Fr1 [N]	Fr2 D [N]	Fr2 C-L [N]
3075	66.00	5.79	17.3	3698	30000	11200

IS123

Mn_2 [Nm]	i	Pn_1 [kW]	n2 [rpm]	Fr1 [N]	Fr2 D [N]	Fr2 C-L [N]
2768	64.84	5.42	17.6	3721	30000	11200
2768	71.07	4.95	16.0	3742	30000	11200
3075	78.46	4.98	14.5	3741	30000	11200
3075	87.27	4.47	13.1	3763	30000	11200
3075	105.91	3.69	10.8	3799	30000	11200
3075	112.52	3.47	10.1	3809	30000	11200
3075	123.33	3.17	9.2	3822	30000	11200
3075	130.04	3.00	8.8	3830	30000	11200
3075	133.78	2.92	8.5	3834	30000	11200
3075	151.43	2.58	7.5	3849	30000	11200
3075	177.53	2.20	6.4	3866	30000	11200
3075	194.59	2.01	5.9	3875	30000	11200
3075	215.60	1.81	5.3	3884	30000	11200
3075	238.93	1.63	4.8	3892	30000	11200
3075	255.54	1.53	4.5	3897	30000	11200

IS142

Mn_2 [Nm]	i	Pn_1 [kW]	n2 [rpm]	Fr1 [N]	Fr2 D [N]	Fr2 C-L [N]
1424	4.12	43.00	276.9	2336	22702	12973
1587	4.59	43.03	248.6	2334	22644	12940
1781	5.14	43.05	221.6	2333	22472	12841
2013	5.82	43.02	195.9	2335	22158	12662
2152	6.21	43.06	183.5	2332	21896	12512
1963	7.32	33.36	155.8	2909	25537	14593
2202	8.21	33.37	138.9	2909	25236	14420
2492	9.29	33.38	122.8	2908	24718	14124
2662	9.91	33.39	115.0	2908	24353	13916
2886	11.41	31.47	100.0	3022	24729	14131
2686	12.81	26.06	89.0	3343	28171	16098
2501	14.27	21.79	79.9	3597	31412	17950
2718	16.01	21.12	71.2	3637	31675	18100
3075	18.11	21.11	63.0	3637	31068	17753
3284	19.33	21.12	59.0	3637	30628	17502
3398	22.24	18.99	51.2	3763	32406	18500
2968	25.26	14.61	45.1	4024	35000	18500
3329	28.33	14.61	40.2	4024	35000	18500
3766	32.05	14.61	35.6	4024	35000	18500

5.4 IS REDUCTOR - 1140 RPM

IS142

Mn_2 [Nm]	i	Pn_1 [kW]	n2 [rpm]	Fr1 [N]	Fr2 D [N]	Fr2 C-L [N]
4021	34.22	14.61	33.3	4024	35000	18500
4542	39.38	14.34	28.9	4040	35000	18500

IS143

Mn_2 [Nm]	i	Pn_1 [kW]	n2 [rpm]	Fr1 [N]	Fr2 D [N]	Fr2 C-L [N]
4113	45.77	11.41	24.9	4200	35000	18500
4582	50.97	11.41	22.4	4200	35000	18500
4853	57.17	10.78	19.9	4200	35000	18500
4894	64.68	9.61	17.6	4200	35000	18500
4998	69.06	9.19	16.5	4200	35000	18500
4339	79.45	6.94	14.3	4200	35000	18500
4551	98.81	5.85	11.5	4200	35000	18500
4852	110.05	5.60	10.4	4200	35000	18500
4873	123.44	5.01	9.2	4200	35000	18500
4962	139.64	4.51	8.2	4200	35000	18500
4905	149.10	4.18	7.7	4200	35000	18500
3896	157.49	3.14	7.2	4200	35000	18500
4786	171.55	3.54	6.7	4200	35000	18500
4340	175.41	3.14	6.5	4200	35000	18500
4867	196.74	3.14	5.8	4200	35000	18500
4833	222.57	2.76	5.1	4200	35000	18500
5004	237.63	2.67	4.8	4200	35000	18500
4912	273.41	2.28	4.2	4200	35000	18500

IS152

Mn_2 [Nm]	i	Pn_1 [kW]	n2 [rpm]	Fr1 [N]	Fr2 D [N]	Fr2 C-L [N]
2638	4.06	80.75	280.7	2730	27495	15711
2943	4.53	80.73	251.5	2731	27481	15703
2987	5.20	71.37	219.1	3068	29222	16698
3016	5.71	65.65	199.6	3275	30453	17402
3152	6.52	60.08	174.8	3476	31812	18178
3340	7.28	57.06	156.6	3585	32628	18645
3619	8.36	53.85	136.4	3701	33540	19166
3845	9.17	52.12	124.3	3763	34029	19400
4287	10.42	51.16	109.4	3798	34121	19400
3388	12.46	33.81	91.5	4424	40000	19400
3780	13.91	33.79	82.0	4425	40000	19400
4340	15.97	33.80	71.4	4425	40000	19400
4764	17.53	33.80	65.0	4424	40000	19400
5412	19.91	33.80	57.3	4424	40000	19400
6222	22.88	33.81	49.8	4424	40000	19400

5.4 IS REDUCTOR - 1140 RPM

IS152

Mn_2 [Nm]	i	Pn_1 [kW]	n2 [rpm]	Fr1 [N]	Fr2 D [N]	Fr2 C-L [N]
6241	27.11	28.63	42.1	4611	40000	19400
6852	29.75	28.64	38.3	4611	40000	19400
7782	33.79	28.64	33.7	4611	40000	19400
7881	38.84	25.23	29.4	4734	40000	19400

IS153

Mn_2 [Nm]	i	Pn_1 [kW]	n2 [rpm]	Fr1 [N]	Fr2 D [N]	Fr2 C-L [N]
6438	40.10	20.39	28.4	4924	40000	19400
7185	44.76	20.39	25.5	4924	40000	19400
8062	51.38	19.93	22.2	4940	40000	19400
8460	56.39	19.05	20.2	4971	40000	19400
9015	64.05	17.87	17.8	5013	40000	19400
7974	73.63	13.75	15.5	5158	40000	19400
7283	87.16	10.61	13.1	5200	40000	19400
8129	97.27	10.61	11.7	5200	40000	19400
9331	111.67	10.61	10.2	5200	40000	19400
9775	122.57	10.13	9.3	5200	40000	19400
9370	139.21	8.55	8.2	5200	40000	19400
7307	154.02	6.02	7.4	5200	40000	19400
8286	160.02	6.58	7.1	5200	40000	19400
8389	176.81	6.02	6.5	5200	40000	19400
9206	194.06	6.02	5.9	5200	40000	19400
9587	220.42	5.52	5.2	5200	40000	19400
8486	253.36	4.25	4.5	5200	40000	19400

5.5 IS REDUCTOR - 900 RPM

IS052

Mn_2 [Nm]	i	Pn_1 [kW]	n2 [rpm]	Fr1 [N]	Fr2 D [N]	Fr2 C-L [N]
179	8.63	2.01	104.3	683	4011	4011
200	11.14	1.74	80.8	781	4334	4334
210	12.00	1.70	75.0	795	4409	4409
221	13.66	1.57	65.9	842	4593	4593
252	15.27	1.60	58.9	830	4631	4631
252	16.29	1.50	55.3	866	4762	4762
252	18.63	1.31	48.3	934	5045	5045
252	19.73	1.24	45.6	960	5169	5169
273	21.04	1.26	42.8	953	5189	5189
273	21.53	1.23	41.8	963	5241	5241
273	24.07	1.10	37.4	1010	5496	5496
305	25.20	1.17	35.7	984	5422	5422
305	25.79	1.15	34.9	994	5476	5476
305	27.81	1.06	32.4	1024	5659	5659
305	30.00	0.99	30.0	1052	5848	5848
315	32.55	0.94	27.6	1068	5994	5994
315	33.00	0.93	27.3	1073	6000	6000
315	34.09	0.90	26.4	1083	6000	6000
347	36.55	0.92	24.6	1075	6000	6000
347	38.75	0.87	23.2	1094	6000	6000
368	39.90	0.90	22.6	1084	6000	6000
368	42.63	0.84	21.1	1105	6000	6000
368	46.00	0.78	19.6	1127	6000	6000
368	47.20	0.76	19.1	1134	6000	6000
368	52.25	0.68	17.2	1161	6000	6000
368	57.86	0.62	15.6	1184	6000	6000
368	59.42	0.60	15.2	1190	6000	6000
368	72.83	0.49	12.4	1230	6000	6000

IS053

Mn_2 [Nm]	i	Pn_1 [kW]	n2 [rpm]	Fr1 [N]	Fr2 D [N]	Fr2 C-L [N]
368	36.50	1.00	24.7	1054	5991	5991
368	47.14	0.77	19.1	1134	6000	6000
368	57.79	0.63	15.6	1184	6000	6000
368	63.74	0.57	14.1	1205	6000	6000
368	74.20	0.49	12.1	1233	6000	6000
368	78.14	0.47	11.5	1242	6000	6000
368	95.84	0.38	9.4	1272	6000	6000
368	117.48	0.31	7.7	1297	6000	6000
368	137.45	0.27	6.5	1313	6000	6000
368	177.55	0.21	5.1	1334	6000	6000
368	198.45	0.18	4.5	1342	6000	6000
368	217.64	0.17	4.1	1347	6000	6000

5.5 IS REDUCTOR - 900 RPM

IS053

Mn_2 [Nm]	i	Pn_1 [kW]	n2 [rpm]	Fr1 [N]	Fr2 D [N]	Fr2 C-L [N]
368	256.33	0.14	3.5	1356	6000	6000
368	314.21	0.12	2.9	1366	6000	6000

IS062

Mn_2 [Nm]	i	Pn_1 [kW]	n2 [rpm]	Fr1 [N]	Fr2 D [N]	Fr2 C-L [N]
347	8.00	4.21	112.5	297	6269	2508
347	8.92	3.77	100.9	412	6580	2632
378	9.55	3.85	94.3	392	6578	2631
378	10.65	3.45	84.5	497	6907	2763
410	11.71	3.40	76.9	511	7004	2802
441	13.06	3.28	68.9	542	7156	2862
441	13.36	3.21	67.4	561	7231	2892
473	15.94	2.88	56.5	648	7633	3053
473	16.16	2.84	55.7	658	7682	3073
473	19.29	2.38	46.7	780	8323	3329
483	19.55	2.40	46.0	775	8308	3323
494	23.18	2.07	38.8	862	8898	3559
494	23.75	2.02	37.9	875	8995	3598
504	25.14	1.95	35.8	894	9159	3663
504	27.66	1.77	32.5	941	9553	3821
525	30.00	1.70	30.0	960	9767	3907
567	33.93	1.62	26.5	980	10000	4000
630	36.57	1.67	24.6	967	9986	3994
630	39.38	1.56	22.9	998	10000	4000
630	43.64	1.40	20.6	1038	10000	4000
630	46.10	1.33	19.5	1058	10000	4000
630	48.30	1.27	18.6	1074	10000	4000
630	53.53	1.14	16.8	1107	10000	4000
630	55.00	1.11	16.4	1115	10000	4000
630	67.47	0.91	13.3	1169	10000	4000

IS063

Mn_2 [Nm]	i	Pn_1 [kW]	n2 [rpm]	Fr1 [N]	Fr2 D [N]	Fr2 C-L [N]
630	33.57	1.86	26.8	927	9596	3839
630	37.77	1.66	23.8	981	10000	4000
630	40.05	1.56	22.5	1005	10000	4000
630	49.13	1.27	18.3	1080	10000	4000
630	55.29	1.13	16.3	1116	10000	4000
630	58.72	1.07	15.3	1133	10000	4000
630	65.85	0.95	13.7	1163	10000	4000
630	68.25	0.92	13.2	1172	10000	4000

5.5 IS REDUCTOR - 900 RPM

IS063

Mn_2 [Nm]	i	Pn_1 [kW]	n2 [rpm]	Fr1 [N]	Fr2 D [N]	Fr2 C-L [N]
630	73.63	0.85	12.2	1189	10000	4000
630	81.43	0.77	11.1	1210	10000	4000
630	99.89	0.63	9.0	1247	10000	4000
630	126.43	0.49	7.1	1281	10000	4000
630	150.85	0.41	6.0	1302	10000	4000
630	182.53	0.34	4.9	1320	10000	4000
630	185.05	0.34	4.9	1321	10000	4000
630	217.79	0.29	4.1	1335	10000	4000
630	267.16	0.23	3.4	1348	10000	4000

IS082

Mn_2 [Nm]	i	Pn_1 [kW]	n2 [rpm]	Fr1 [N]	Fr2 D [N]	Fr2 C-L [N]
578	7.34	7.65	122.6	1175	14112	4032
630	8.06	7.59	111.6	1188	14444	4127
683	9.94	6.67	90.5	1406	15455	4416
735	11.61	6.16	77.5	1529	16209	4631
788	12.75	6.00	70.6	1565	16623	4749
798	14.04	5.52	64.1	1678	17211	4917
809	15.43	5.09	58.3	1780	17802	5086
809	15.73	5.00	57.2	1803	17931	5123
809	17.29	4.54	52.0	1910	18000	5311
809	19.03	4.13	47.3	2009	18000	5505
809	20.14	3.90	44.7	2063	18000	5623
840	22.13	3.69	40.7	2113	18000	5795
840	24.00	3.40	37.5	2181	18000	5974
840	26.05	3.13	34.5	2244	18000	6159
945	27.29	3.37	33.0	2190	18000	6168
945	28.67	3.20	31.4	2228	18000	6285
945	29.60	3.10	30.4	2252	18000	6360
1050	31.78	3.21	28.3	2226	18000	6433
1050	34.91	2.92	25.8	2294	18000	6667
1050	35.50	2.87	25.4	2306	18000	6710
1050	40.05	2.55	22.5	2383	18000	7022
1050	43.05	2.37	20.9	2425	18000	7200
1050	50.25	2.03	17.9	2506	18000	7200
1050	54.27	1.88	16.6	2542	18000	7200
1050	61.98	1.65	14.5	2597	18000	7200

IS083

Mn_2 [Nm]	i	Pn_1 [kW]	n2 [rpm]	Fr1 [N]	Fr2 D [N]	Fr2 C-L [N]
1050	67.52	1.54	13.3	2629	18000	7200

5.5 IS REDUCTOR - 900 RPM

IS083

Mn_2 [Nm]	i	Pn_1 [kW]	n2 [rpm]	Fr1 [N]	Fr2 D [N]	Fr2 C-L [N]
1050	74.18	1.41	12.1	2661	18000	7200
1050	81.71	1.28	11.0	2691	18000	7200
1050	91.49	1.14	9.8	2723	18000	7200
1050	100.62	1.04	8.9	2747	18000	7200
1050	117.17	0.89	7.7	2781	18000	7200
1050	128.73	0.81	7.0	2799	18000	7200
1050	136.34	0.76	6.6	2810	18000	7200
1050	158.76	0.66	5.7	2835	18000	7200
1050	184.88	0.56	4.9	2856	18000	7200
1050	203.11	0.51	4.4	2868	18000	7200
1050	205.34	0.51	4.4	2869	18000	7200
1050	226.04	0.46	4.0	2880	18000	7200
1050	250.50	0.42	3.6	2891	18000	7200
1050	266.13	0.39	3.4	2896	18000	7200
1050	292.36	0.36	3.1	2904	18000	7200
1050	315.73	0.33	2.9	2911	18000	7200
1050	360.58	0.29	2.5	2920	18000	7200

IS102

Mn_2 [Nm]	i	Pn_1 [kW]	n2 [rpm]	Fr1 [N]	Fr2 D [N]	Fr2 C-L [N]
893	8.06	10.76	111.6	530	17780	5080
945	8.85	10.38	101.7	616	18268	5220
998	10.88	8.91	82.7	953	19599	5600
1050	12.75	8.00	70.6	1160	20652	5901
1260	13.99	8.75	64.3	988	20834	5953
1313	15.43	8.27	58.3	1099	21489	6140
1365	17.21	7.71	52.3	1227	22000	6362
1470	19.00	7.52	47.4	1270	22000	6529
1470	20.83	6.86	43.2	1421	22000	6763
1470	22.13	6.46	40.7	1513	22000	6922
1575	24.28	6.31	37.1	1548	22000	7093
1575	26.33	5.81	34.2	1660	22000	7318
1575	29.87	5.13	30.1	1818	22000	7678
1575	32.40	4.72	27.8	1909	22000	7918
1470	34.91	4.09	25.8	2054	22000	8223
1575	38.30	4.00	23.5	2076	22000	8434
1470	42.53	3.36	21.2	2221	22000	8849
1365	44.00	3.02	20.4	2300	22000	9000
1680	47.13	3.46	19.1	2197	22000	9000
1470	50.25	2.84	17.9	2339	22000	9000
1365	55.14	2.41	16.3	2439	22000	9000
1680	59.40	2.75	15.2	2361	22000	9000
1680	67.84	2.41	13.3	2439	22000	9000

5.5 IS REDUCTOR - 900 RPM

IS103

Mn_2 [Nm]	i	Pn_1 [kW]	n2 [rpm]	Fr1 [N]	Fr2 D [N]	Fr2 C-L [N]
1680	74.18	2.25	12.1	2486	22000	9000
1680	81.39	2.05	11.1	2530	22000	9000
1680	89.77	1.86	10.0	2573	22000	9000
1680	100.15	1.67	9.0	2616	22000	9000
1680	110.55	1.51	8.1	2651	22000	9000
1680	121.29	1.37	7.4	2681	22000	9000
1680	128.73	1.30	7.0	2699	22000	9000
1680	141.24	1.18	6.4	2725	22000	9000
1680	173.78	0.96	5.2	2774	22000	9000
1680	188.51	0.88	4.8	2791	22000	9000
1680	203.11	0.82	4.4	2805	22000	9000
1680	222.85	0.75	4.0	2821	22000	9000
1680	224.76	0.74	4.0	2823	22000	9000
1680	274.20	0.61	3.3	2853	22000	9000
1680	280.89	0.59	3.2	2856	22000	9000
1680	292.36	0.57	3.1	2861	22000	9000
1680	320.79	0.52	2.8	2873	22000	9000
1680	345.60	0.48	2.6	2881	22000	9000
1680	394.69	0.42	2.3	2894	22000	9000

IS122

Mn_2 [Nm]	i	Pn_1 [kW]	n2 [rpm]	Fr1 [N]	Fr2 D [N]	Fr2 C-L [N]
1575	8.48	18.05	106.1	2900	23269	6648
1785	9.30	18.66	96.8	2864	23372	6678
1785	10.24	16.95	87.9	2965	24346	6956
1995	11.42	16.99	78.8	2963	24689	7054
2310	12.63	17.78	71.3	2916	24586	7025
2520	13.84	17.70	65.0	2921	24815	7090
2730	16.99	15.61	53.0	3044	26428	7551
2940	21.25	13.45	42.4	3172	28448	8128
2940	22.37	12.78	40.2	3211	29123	8321
3045	23.29	12.71	38.6	3215	29267	8362
3150	26.15	11.71	34.4	3274	30000	8703
3150	28.60	10.71	31.5	3333	30000	9066
3150	30.51	10.03	29.5	3373	30000	9335
3150	32.76	9.35	27.5	3414	30000	9637
3150	33.44	9.15	26.9	3425	30000	9727
3150	35.20	8.70	25.6	3452	30000	9950
3150	41.07	7.46	21.9	3525	30000	10647
3150	43.60	7.02	20.6	3551	30000	10928
2520	44.63	5.49	20.2	3642	30000	11200
2520	49.04	4.99	18.4	3671	30000	11200
2730	53.75	4.94	16.7	3674	30000	11200

5.5 IS REDUCTOR - 900 RPM

IS122

Mn_2 [Nm]	i	Pn_1 [kW]	n2 [rpm]	Fr1 [N]	Fr2 D [N]	Fr2 C-L [N]
3150	66.00	4.64	13.6	3692	30000	11200

IS123

Mn_2 [Nm]	i	Pn_1 [kW]	n2 [rpm]	Fr1 [N]	Fr2 D [N]	Fr2 C-L [N]
2835	64.84	4.34	13.9	3715	30000	11200
2835	71.07	3.96	12.7	3737	30000	11200
3150	78.46	3.99	11.5	3735	30000	11200
3150	87.27	3.58	10.3	3758	30000	11200
3150	105.91	2.95	8.5	3795	30000	11200
3150	112.52	2.78	8.0	3805	30000	11200
3150	123.33	2.54	7.3	3819	30000	11200
3150	130.04	2.40	6.9	3827	30000	11200
3150	133.78	2.34	6.7	3830	30000	11200
3150	151.43	2.06	5.9	3846	30000	11200
3150	177.53	1.76	5.1	3864	30000	11200
3150	194.59	1.61	4.6	3873	30000	11200
3150	215.60	1.45	4.2	3882	30000	11200
3150	238.93	1.31	3.8	3890	30000	11200
3150	255.54	1.22	3.5	3895	30000	11200

IS142

Mn_2 [Nm]	i	Pn_1 [kW]	n2 [rpm]	Fr1 [N]	Fr2 D [N]	Fr2 C-L [N]
1458	4.12	34.43	218.6	2274	25181	14389
1626	4.59	34.45	196.2	2272	25192	14395
1824	5.14	34.47	175.0	2270	25092	14338
2062	5.82	34.44	154.7	2273	24856	14204
2204	6.21	34.48	144.9	2270	24635	14077
2011	7.32	26.71	123.0	2861	28487	16279
2256	8.21	26.72	109.7	2860	28268	16153
2553	9.29	26.73	96.9	2860	27839	15908
2727	9.91	26.73	90.8	2859	27520	15726
2957	11.41	25.20	78.9	2976	28027	16015
2751	12.81	20.87	70.2	3305	31658	18090
2562	14.27	17.45	63.1	3565	35000	18500
2784	16.01	16.91	56.2	3606	35000	18500
3150	18.11	16.91	49.7	3607	34964	18500
3364	19.33	16.91	46.5	3606	34583	18500
3481	22.24	15.21	40.5	3736	35000	18500
3041	25.26	11.70	35.6	4003	35000	18500
3410	28.33	11.70	31.8	4003	35000	18500
3858	32.05	11.70	28.1	4003	35000	18500

5.5 IS REDUCTOR - 900 RPM

IS142

Mn_2 [Nm]	i	Pn_1 [kW]	n2 [rpm]	Fr1 [N]	Fr2 D [N]	Fr2 C-L [N]
4119	34.22	11.70	26.3	4003	35000	18500
4652	39.38	11.48	22.9	4019	35000	18500

IS143

Mn_2 [Nm]	i	Pn_1 [kW]	n2 [rpm]	Fr1 [N]	Fr2 D [N]	Fr2 C-L [N]
4214	45.77	9.14	19.7	4200	35000	18500
4693	50.97	9.14	17.7	4200	35000	18500
4971	57.17	8.63	15.7	4200	35000	18500
5013	64.68	7.69	13.9	4200	35000	18500
5120	69.06	7.36	13.0	4200	35000	18500
4445	79.45	5.55	11.3	4200	35000	18500
4662	98.81	4.68	9.1	4200	35000	18500
4970	110.05	4.48	8.2	4200	35000	18500
4992	123.44	4.01	7.3	4200	35000	18500
5083	139.64	3.61	6.4	4200	35000	18500
5025	149.10	3.35	6.0	4200	35000	18500
3991	157.49	2.52	5.7	4200	35000	18500
4903	171.55	2.84	5.2	4200	35000	18500
4446	175.41	2.52	5.1	4200	35000	18500
4986	196.74	2.52	4.6	4200	35000	18500
4951	222.57	2.21	4.0	4200	35000	18500
5126	237.63	2.14	3.8	4200	35000	18500
5031	273.41	1.83	3.3	4200	35000	18500

IS152

Mn_2 [Nm]	i	Pn_1 [kW]	n2 [rpm]	Fr1 [N]	Fr2 D [N]	Fr2 C-L [N]
2702	4.06	64.66	221.6	2659	30466	17409
3015	4.53	64.64	198.6	2660	30536	17449
3060	5.20	57.15	172.9	3005	32431	18532
3089	5.71	52.57	157.6	3217	33770	19297
3229	6.52	48.11	138.0	3423	35277	19400
3422	7.28	45.69	123.6	3535	36213	19400
3708	8.36	43.12	107.7	3653	37277	19400
3939	9.17	41.73	98.1	3717	37869	19400
4391	10.42	40.96	86.4	3753	38092	19400
3471	12.46	27.07	72.2	4394	40000	19400
3872	13.91	27.06	64.7	4395	40000	19400
4446	15.97	27.06	56.4	4395	40000	19400
4881	17.53	27.07	51.4	4395	40000	19400
5544	19.91	27.07	45.2	4394	40000	19400
6374	22.88	27.07	39.3	4394	40000	19400

5.5 IS REDUCTOR - 900 RPM

IS152

Mn_2 [Nm]	i	Pn_1 [kW]	n2 [rpm]	Fr1 [N]	Fr2 D [N]	Fr2 C-L [N]
6394	27.11	22.93	33.2	4586	40000	19400
7019	29.75	22.93	30.2	4585	40000	19400
7972	33.79	22.93	26.6	4586	40000	19400
8073	38.84	20.20	23.2	4711	40000	19400

IS153

Mn_2 [Nm]	i	Pn_1 [kW]	n2 [rpm]	Fr1 [N]	Fr2 D [N]	Fr2 C-L [N]
6595	40.10	16.33	22.4	4906	40000	19400
7360	44.76	16.32	20.1	4906	40000	19400
8259	51.38	15.95	17.5	4923	40000	19400
8667	56.39	15.25	16.0	4955	40000	19400
9235	64.05	14.31	14.1	4997	40000	19400
8168	73.63	11.01	12.2	5146	40000	19400
7461	87.16	8.50	10.3	5200	40000	19400
8327	97.27	8.50	9.2	5200	40000	19400
9559	111.67	8.50	8.1	5200	40000	19400
10013	122.57	8.11	7.3	5200	40000	19400
9599	139.21	6.84	6.5	5200	40000	19400
7485	154.02	4.82	5.8	5200	40000	19400
8489	160.02	5.27	5.6	5200	40000	19400
8593	176.81	4.82	5.1	5200	40000	19400
9431	194.06	4.82	4.6	5200	40000	19400
9821	220.42	4.42	4.1	5200	40000	19400
8693	253.36	3.41	3.5	5200	40000	19400

5.6 IS REDUCTOR - 700 RPM

IS052

Mn_2 [Nm]	i	Pn_1 [kW]	n2 [rpm]	Fr1 [N]	Fr2 D [N]	Fr2 C-L [N]
181	8.63	1.58	81.2	674	4435	4435
202	11.14	1.36	62.8	773	4795	4795
213	12.00	1.33	58.3	787	4881	4881
223	13.66	1.23	51.3	835	5086	5086
255	15.27	1.26	45.8	823	5141	5141
255	16.29	1.18	43.0	859	5283	5283
255	18.63	1.03	37.6	928	5590	5590
255	19.73	0.97	35.5	955	5725	5725
276	21.04	0.99	33.3	947	5756	5756
276	21.53	0.97	32.5	958	5812	5812
276	24.07	0.86	29.1	1005	6000	6000
308	25.20	0.92	27.8	979	6000	6000
308	25.79	0.90	27.1	989	6000	6000
308	27.81	0.83	25.2	1019	6000	6000
308	30.00	0.77	23.3	1047	6000	6000
319	32.55	0.74	21.5	1064	6000	6000
319	33.00	0.73	21.2	1069	6000	6000
319	34.09	0.70	20.5	1080	6000	6000
351	36.55	0.72	19.1	1071	6000	6000
351	38.75	0.68	18.1	1090	6000	6000
372	39.90	0.70	17.5	1081	6000	6000
372	42.63	0.66	16.4	1101	6000	6000
372	46.00	0.61	15.2	1124	6000	6000
372	47.20	0.59	14.8	1131	6000	6000
372	52.25	0.54	13.4	1158	6000	6000
372	57.86	0.48	12.1	1182	6000	6000
372	59.42	0.47	11.8	1188	6000	6000
372	72.83	0.38	9.6	1228	6000	6000

IS053

Mn_2 [Nm]	i	Pn_1 [kW]	n2 [rpm]	Fr1 [N]	Fr2 D [N]	Fr2 C-L [N]
372	36.50	0.78	19.2	1050	6000	6000
372	47.14	0.61	14.8	1131	6000	6000
372	57.79	0.49	12.1	1181	6000	6000
372	63.74	0.45	11.0	1203	6000	6000
372	74.20	0.39	9.4	1231	6000	6000
372	78.14	0.37	9.0	1240	6000	6000
372	95.84	0.30	7.3	1271	6000	6000
372	117.48	0.24	6.0	1296	6000	6000
372	137.45	0.21	5.1	1312	6000	6000
372	177.55	0.16	3.9	1333	6000	6000
372	198.45	0.14	3.5	1341	6000	6000
372	217.64	0.13	3.2	1347	6000	6000

5.6 IS REDUCTOR - 700 RPM

IS053

Mn_2 [Nm]	i	Pn_1 [kW]	n2 [rpm]	Fr1 [N]	Fr2 D [N]	Fr2 C-L [N]
372	256.33	0.11	2.7	1356	6000	6000
372	314.21	0.09	2.2	1365	6000	6000

IS062

Mn_2 [Nm]	i	Pn_1 [kW]	n2 [rpm]	Fr1 [N]	Fr2 D [N]	Fr2 C-L [N]
351	8.00	3.30	87.5	284	6975	2790
351	8.92	2.96	78.5	400	7312	2925
383	9.55	3.01	73.3	380	7325	2930
383	10.65	2.70	65.8	486	7683	3073
414	11.71	2.66	59.8	500	7803	3121
446	13.06	2.57	53.6	531	7983	3193
446	13.36	2.51	52.4	551	8065	3226
478	15.94	2.26	43.9	639	8516	3407
478	16.16	2.23	43.3	649	8570	3428
478	19.29	1.86	36.3	772	9266	3706
489	19.55	1.88	35.8	767	9254	3702
499	23.18	1.62	30.2	856	9901	3960
499	23.75	1.58	29.5	869	10000	4000
510	25.14	1.53	27.8	888	10000	4000
510	27.66	1.39	25.3	935	10000	4000
531	30.00	1.33	23.3	954	10000	4000
574	33.93	1.27	20.6	975	10000	4000
638	36.57	1.31	19.1	961	10000	4000
638	39.38	1.22	17.8	993	10000	4000
638	43.64	1.10	16.0	1034	10000	4000
638	46.10	1.04	15.2	1054	10000	4000
638	48.30	0.99	14.5	1070	10000	4000
638	53.53	0.90	13.1	1103	10000	4000
638	55.00	0.87	12.7	1111	10000	4000
638	67.47	0.71	10.4	1166	10000	4000

IS063

Mn_2 [Nm]	i	Pn_1 [kW]	n2 [rpm]	Fr1 [N]	Fr2 D [N]	Fr2 C-L [N]
638	33.57	1.46	20.9	921	10000	4000
638	37.77	1.30	18.5	976	10000	4000
638	40.05	1.22	17.5	1000	10000	4000
638	49.13	1.00	14.2	1076	10000	4000
638	55.29	0.89	12.7	1113	10000	4000
638	58.72	0.83	11.9	1130	10000	4000
638	65.85	0.74	10.6	1160	10000	4000
638	68.25	0.72	10.3	1169	10000	4000

5.6 IS REDUCTOR - 700 RPM

IS063

Mn_2 [Nm]	i	Pn_1 [kW]	n2 [rpm]	Fr1 [N]	Fr2 D [N]	Fr2 C-L [N]
638	73.63	0.67	9.5	1187	10000	4000
638	81.43	0.60	8.6	1208	10000	4000
638	99.89	0.49	7.0	1245	10000	4000
638	126.43	0.39	5.5	1279	10000	4000
638	150.85	0.32	4.6	1300	10000	4000
638	182.53	0.27	3.8	1319	10000	4000
638	185.05	0.26	3.8	1320	10000	4000
638	217.79	0.22	3.2	1334	10000	4000
638	267.16	0.18	2.6	1348	10000	4000

IS082

Mn_2 [Nm]	i	Pn_1 [kW]	n2 [rpm]	Fr1 [N]	Fr2 D [N]	Fr2 C-L [N]
584	7.34	5.99	95.4	1153	15474	4421
638	8.06	5.95	86.8	1166	15847	4528
691	9.94	5.22	70.4	1388	16959	4845
744	11.61	4.82	60.3	1511	17790	5083
797	12.75	4.70	54.9	1548	18000	5215
808	14.04	4.33	49.8	1663	18000	5399
818	15.43	3.99	45.4	1766	18000	5583
818	15.73	3.91	44.5	1789	18000	5623
818	17.29	3.56	40.5	1898	18000	5826
818	19.03	3.23	36.8	1997	18000	6038
818	20.14	3.06	34.8	2052	18000	6166
850	22.13	2.89	31.6	2102	18000	6355
850	24.00	2.66	29.2	2171	18000	6550
850	26.05	2.45	26.9	2236	18000	6751
956	27.29	2.64	25.6	2180	18000	6768
956	28.67	2.51	24.4	2219	18000	6894
956	29.60	2.43	23.6	2243	18000	6976
1063	31.78	2.52	22.0	2217	18000	7063
1063	34.91	2.29	20.1	2286	18000	7200
1063	35.50	2.25	19.7	2298	18000	7200
1063	40.05	2.00	17.5	2376	18000	7200
1063	43.05	1.86	16.3	2419	18000	7200
1063	50.25	1.59	13.9	2500	18000	7200
1063	54.27	1.47	12.9	2536	18000	7200
1063	61.98	1.29	11.3	2592	18000	7200

IS083

Mn_2 [Nm]	i	Pn_1 [kW]	n2 [rpm]	Fr1 [N]	Fr2 D [N]	Fr2 C-L [N]
1063	67.52	1.21	10.4	2625	18000	7200

5.6 IS REDUCTOR - 700 RPM

IS083

Mn_2 [Nm]	i	Pn_1 [kW]	n2 [rpm]	Fr1 [N]	Fr2 D [N]	Fr2 C-L [N]
1063	74.18	1.10	9.4	2657	18000	7200
1063	81.71	1.00	8.6	2688	18000	7200
1063	91.49	0.89	7.7	2720	18000	7200
1063	100.62	0.81	7.0	2744	18000	7200
1063	117.17	0.70	6.0	2778	18000	7200
1063	128.73	0.63	5.4	2797	18000	7200
1063	136.34	0.60	5.1	2808	18000	7200
1063	158.76	0.51	4.4	2833	18000	7200
1063	184.88	0.44	3.8	2855	18000	7200
1063	203.11	0.40	3.5	2867	18000	7200
1063	205.34	0.40	3.4	2868	18000	7200
1063	226.04	0.36	3.1	2879	18000	7200
1063	250.50	0.33	2.8	2889	18000	7200
1063	266.13	0.31	2.6	2895	18000	7200
1063	292.36	0.28	2.4	2903	18000	7200
1063	315.73	0.26	2.2	2910	18000	7200
1063	360.58	0.23	1.9	2919	18000	7200

IS102

Mn_2 [Nm]	i	Pn_1 [kW]	n2 [rpm]	Fr1 [N]	Fr2 D [N]	Fr2 C-L [N]
903	8.06	8.43	86.8	501	19490	5569
956	8.85	8.13	79.1	588	20031	5723
1009	10.88	6.98	64.3	929	21487	6139
1063	12.75	6.27	54.9	1138	22000	6469
1275	13.99	6.86	50.0	964	22000	6537
1328	15.43	6.48	45.4	1077	22000	6743
1381	17.21	6.04	40.7	1206	22000	6988
1488	19.00	5.89	36.8	1250	22000	7175
1488	20.83	5.37	33.6	1403	22000	7430
1488	22.13	5.06	31.6	1495	22000	7601
1594	24.28	4.94	28.8	1531	22000	7793
1594	26.33	4.55	26.6	1645	22000	8037
1594	29.87	4.01	23.4	1804	22000	8429
1594	32.40	3.70	21.6	1896	22000	8690
1488	34.91	3.21	20.1	2042	22000	9000
1594	38.30	3.13	18.3	2065	22000	9000
1488	42.53	2.63	16.5	2212	22000	9000
1381	44.00	2.36	15.9	2292	22000	9000
1700	47.13	2.71	14.8	2188	22000	9000
1488	50.25	2.23	13.9	2331	22000	9000
1381	55.14	1.88	12.7	2432	22000	9000
1700	59.40	2.15	11.8	2353	22000	9000
1700	67.84	1.89	10.3	2432	22000	9000

5.6 IS REDUCTOR - 700 RPM

IS103

Mn_2 [Nm]	i	Pn_1 [kW]	n2 [rpm]	Fr1 [N]	Fr2 D [N]	Fr2 C-L [N]
1700	74.18	1.76	9.4	2480	22000	9000
1700	81.39	1.60	8.6	2525	22000	9000
1700	89.77	1.45	7.8	2568	22000	9000
1700	100.15	1.30	7.0	2612	22000	9000
1700	110.55	1.18	6.3	2647	22000	9000
1700	121.29	1.08	5.8	2678	22000	9000
1700	128.73	1.01	5.4	2696	22000	9000
1700	141.24	0.92	5.0	2722	22000	9000
1700	173.78	0.75	4.0	2772	22000	9000
1700	188.51	0.69	3.7	2789	22000	9000
1700	203.11	0.64	3.5	2803	22000	9000
1700	222.85	0.59	3.1	2819	22000	9000
1700	224.76	0.58	3.1	2821	22000	9000
1700	274.20	0.48	2.5	2851	22000	9000
1700	280.89	0.46	2.5	2854	22000	9000
1700	292.36	0.45	2.4	2860	22000	9000
1700	320.79	0.41	2.2	2871	22000	9000
1700	345.60	0.38	2.0	2880	22000	9000
1700	394.69	0.33	1.8	2893	22000	9000

IS122

Mn_2 [Nm]	i	Pn_1 [kW]	n2 [rpm]	Fr1 [N]	Fr2 D [N]	Fr2 C-L [N]
1594	8.48	14.13	82.5	2887	25726	7350
1806	9.30	14.61	75.3	2851	25898	7399
1806	10.24	13.27	68.4	2953	26956	7702
2019	11.42	13.30	61.3	2951	27388	7825
2338	12.63	13.93	55.4	2903	27364	7818
2550	13.84	13.86	50.6	2908	27673	7906
2763	16.99	12.23	41.2	3033	29485	8424
2975	21.25	10.53	32.9	3162	30000	9068
2975	22.37	10.01	31.3	3202	30000	9278
3081	23.29	9.95	30.1	3206	30000	9331
3188	26.15	9.17	26.8	3266	30000	9710
3188	28.60	8.38	24.5	3326	30000	10104
3188	30.51	7.86	22.9	3366	30000	10396
3188	32.76	7.32	21.4	3407	30000	10724
3188	33.44	7.17	20.9	3419	30000	10822
3188	35.20	6.81	19.9	3446	30000	11065
3188	41.07	5.84	17.1	3520	30000	11200
3188	43.60	5.50	16.1	3546	30000	11200
2550	44.63	4.30	15.7	3638	30000	11200
2550	49.04	3.91	14.3	3667	30000	11200
2763	53.75	3.87	13.0	3671	30000	11200

5.6 IS REDUCTOR - 700 RPM

IS122

Mn_2 [Nm]	i	Pn_1 [kW]	n2 [rpm]	Fr1 [N]	Fr2 D [N]	Fr2 C-L [N]
3188	66.00	3.63	10.6	3688	30000	11200

IS123

Mn_2 [Nm]	i	Pn_1 [kW]	n2 [rpm]	Fr1 [N]	Fr2 D [N]	Fr2 C-L [N]
2869	64.84	3.40	10.8	3712	30000	11200
2869	71.07	3.10	9.8	3734	30000	11200
3188	78.46	3.12	8.9	3732	30000	11200
3188	87.27	2.81	8.0	3756	30000	11200
3188	105.91	2.31	6.6	3793	30000	11200
3188	112.52	2.18	6.2	3803	30000	11200
3188	123.33	1.99	5.7	3817	30000	11200
3188	130.04	1.88	5.4	3825	30000	11200
3188	133.78	1.83	5.2	3829	30000	11200
3188	151.43	1.62	4.6	3845	30000	11200
3188	177.53	1.38	3.9	3863	30000	11200
3188	194.59	1.26	3.6	3872	30000	11200
3188	215.60	1.14	3.2	3881	30000	11200
3188	238.93	1.02	2.9	3889	30000	11200
3188	255.54	0.96	2.7	3894	30000	11200

IS142

Mn_2 [Nm]	i	Pn_1 [kW]	n2 [rpm]	Fr1 [N]	Fr2 D [N]	Fr2 C-L [N]
1476	4.12	26.96	170.0	2243	28216	16124
1645	4.59	26.98	152.6	2241	28326	16186
1846	5.14	27.00	136.1	2239	28334	16191
2087	5.82	26.97	120.3	2241	28218	16125
2230	6.21	27.00	112.7	2239	28061	16035
2035	7.32	20.92	95.7	2836	32133	18362
2283	8.21	20.92	85.3	2836	32039	18308
2584	9.29	20.93	75.4	2835	31747	18141
2759	9.91	20.94	70.6	2835	31503	18002
2992	11.41	19.73	61.4	2953	32189	18394
2784	12.81	16.34	54.6	3286	35000	18500
2593	14.27	13.67	49.0	3549	35000	18500
2818	16.01	13.24	43.7	3591	35000	18500
3187	18.11	13.24	38.7	3591	35000	18500
3404	19.33	13.24	36.2	3591	35000	18500
3522	22.24	11.91	31.5	3722	35000	18500
3077	25.26	9.16	27.7	3992	35000	18500
3451	28.33	9.16	24.7	3992	35000	18500
3904	32.05	9.16	21.8	3992	35000	18500

5.6 IS REDUCTOR - 700 RPM

IS142

Mn_2 [Nm]	i	Pn_1 [kW]	n2 [rpm]	Fr1 [N]	Fr2 D [N]	Fr2 C-L [N]
4168	34.22	9.16	20.4	3992	35000	18500
4708	39.38	8.99	17.8	4009	35000	18500

IS143

Mn_2 [Nm]	i	Pn_1 [kW]	n2 [rpm]	Fr1 [N]	Fr2 D [N]	Fr2 C-L [N]
4264	45.77	7.16	15.3	4200	35000	18500
4749	50.97	7.16	13.7	4200	35000	18500
5030	57.17	6.76	12.2	4200	35000	18500
5073	64.68	6.03	10.8	4200	35000	18500
5181	69.06	5.76	10.1	4200	35000	18500
4498	79.45	4.35	8.8	4200	35000	18500
4717	98.81	3.67	7.1	4200	35000	18500
5029	110.05	3.51	6.4	4200	35000	18500
5052	123.44	3.14	5.7	4200	35000	18500
5143	139.64	2.83	5.0	4200	35000	18500
5085	149.10	2.62	4.7	4200	35000	18500
4039	157.49	1.97	4.4	4200	35000	18500
4961	171.55	2.22	4.1	4200	35000	18500
4499	175.41	1.97	4.0	4200	35000	18500
5046	196.74	1.97	3.6	4200	35000	18500
5010	222.57	1.73	3.1	4200	35000	18500
5187	237.63	1.68	3.0	4200	35000	18500
5091	273.41	1.43	2.6	4200	35000	18500

IS152

Mn_2 [Nm]	i	Pn_1 [kW]	n2 [rpm]	Fr1 [N]	Fr2 D [N]	Fr2 C-L [N]
2734	4.06	50.64	172.3	2623	34097	19400
3051	4.53	50.62	154.4	2624	34289	19400
3096	5.20	44.76	134.5	2974	36364	19400
3126	5.71	41.17	122.6	3188	37829	19400
3267	6.52	37.68	107.3	3396	39518	19400
3463	7.28	35.78	96.2	3510	40000	19400
3752	8.36	33.77	83.8	3630	40000	19400
3985	9.17	32.68	76.3	3694	40000	19400
4443	10.42	32.08	67.2	3730	40000	19400
3512	12.46	21.20	56.2	4380	40000	19400
3918	13.91	21.19	50.3	4380	40000	19400
4499	15.97	21.19	43.8	4380	40000	19400
4939	17.53	21.20	39.9	4380	40000	19400
5610	19.91	21.20	35.2	4380	40000	19400
6450	22.88	21.20	30.6	4379	40000	19400

5.6 IS REDUCTOR - 700 RPM

IS152

Mn_2 [Nm]	i	Pn_1 [kW]	n2 [rpm]	Fr1 [N]	Fr2 D [N]	Fr2 C-L [N]
6470	27.11	17.96	25.8	4573	40000	19400
7102	29.75	17.96	23.5	4573	40000	19400
8067	33.79	17.96	20.7	4573	40000	19400
8170	38.84	15.82	18.0	4700	40000	19400

IS153

Mn_2 [Nm]	i	Pn_1 [kW]	n2 [rpm]	Fr1 [N]	Fr2 D [N]	Fr2 C-L [N]
6674	40.10	12.79	17.5	4897	40000	19400
7448	44.76	12.78	15.6	4898	40000	19400
8357	51.38	12.50	13.6	4914	40000	19400
8770	56.39	11.95	12.4	4946	40000	19400
9345	64.05	11.21	10.9	4990	40000	19400
8266	73.63	8.62	9.5	5141	40000	19400
7550	87.16	6.65	8.0	5200	40000	19400
8426	97.27	6.65	7.2	5200	40000	19400
9673	111.67	6.65	6.3	5200	40000	19400
10132	122.57	6.35	5.7	5200	40000	19400
9713	139.21	5.36	5.0	5200	40000	19400
7574	154.02	3.78	4.5	5200	40000	19400
8590	160.02	4.12	4.4	5200	40000	19400
8695	176.81	3.78	4.0	5200	40000	19400
9543	194.06	3.78	3.6	5200	40000	19400
9938	220.42	3.46	3.2	5200	40000	19400
8796	253.36	2.67	2.8	5200	40000	19400

5.7 IS REDUCTOR - 500 RPM

IS052

Mn_2 [Nm]	i	Pn_1 [kW]	n2 [rpm]	Fr1 [N]	Fr2 D [N]	Fr2 C-L [N]
183	8.63	1.13	58.0	666	5067	5067
204	11.14	0.98	44.9	766	5482	5482
215	12.00	0.96	41.7	780	5585	5585
226	13.66	0.88	36.6	829	5820	5820
258	15.27	0.90	32.7	816	5901	5901
258	16.29	0.85	30.7	853	6000	6000
258	18.63	0.74	26.8	922	6000	6000
258	19.73	0.70	25.4	949	6000	6000
280	21.04	0.71	23.8	942	6000	6000
280	21.53	0.69	23.2	953	6000	6000
280	24.07	0.62	20.8	1000	6000	6000
312	25.20	0.66	19.8	974	6000	6000
312	25.79	0.65	19.4	984	6000	6000
312	27.81	0.60	18.0	1015	6000	6000
312	30.00	0.56	16.7	1043	6000	6000
323	32.55	0.53	15.4	1060	6000	6000
323	33.00	0.52	15.2	1065	6000	6000
323	34.09	0.51	14.7	1076	6000	6000
355	36.55	0.52	13.7	1067	6000	6000
355	38.75	0.49	12.9	1086	6000	6000
376	39.90	0.50	12.5	1077	6000	6000
376	42.63	0.47	11.7	1098	6000	6000
376	46.00	0.44	10.9	1121	6000	6000
376	47.20	0.43	10.6	1128	6000	6000
376	52.25	0.39	9.6	1155	6000	6000
376	57.86	0.35	8.6	1179	6000	6000
376	59.42	0.34	8.4	1185	6000	6000
376	72.83	0.28	6.9	1226	6000	6000

IS053

Mn_2 [Nm]	i	Pn_1 [kW]	n2 [rpm]	Fr1 [N]	Fr2 D [N]	Fr2 C-L [N]
376	36.50	0.56	13.7	1046	6000	6000
376	47.14	0.44	10.6	1127	6000	6000
376	57.79	0.36	8.7	1179	6000	6000
376	63.74	0.32	7.8	1200	6000	6000
376	74.20	0.28	6.7	1229	6000	6000
376	78.14	0.26	6.4	1238	6000	6000
376	95.84	0.21	5.2	1269	6000	6000
376	117.48	0.17	4.3	1294	6000	6000
376	137.45	0.15	3.6	1311	6000	6000
376	177.55	0.12	2.8	1332	6000	6000
376	198.45	0.10	2.5	1340	6000	6000
376	217.64	0.09	2.3	1346	6000	6000

5.7 IS REDUCTOR - 500 RPM

IS053

Mn_2 [Nm]	i	Pn_1 [kW]	n2 [rpm]	Fr1 [N]	Fr2 D [N]	Fr2 C-L [N]
376	256.33	0.08	1.9	1355	6000	6000
376	314.21	0.07	1.6	1365	6000	6000

IS062

Mn_2 [Nm]	i	Pn_1 [kW]	n2 [rpm]	Fr1 [N]	Fr2 D [N]	Fr2 C-L [N]
355	8.00	2.37	62.5	270	8029	3212
355	8.92	2.13	56.0	388	8406	3362
387	9.55	2.17	52.4	368	8442	3377
387	10.65	1.94	47.0	475	8841	3536
419	11.71	1.91	42.7	490	8997	3599
452	13.06	1.85	38.3	521	9220	3688
452	13.36	1.81	37.4	541	9310	3724
484	15.94	1.62	31.4	630	9837	3935
484	16.16	1.60	30.9	640	9897	3959
484	19.29	1.34	25.9	765	10000	4000
495	19.55	1.35	25.6	759	10000	4000
505	23.18	1.17	21.6	849	10000	4000
505	23.75	1.14	21.1	863	10000	4000
516	25.14	1.10	19.9	882	10000	4000
516	27.66	1.00	18.1	930	10000	4000
538	30.00	0.96	16.7	949	10000	4000
581	33.93	0.91	14.7	970	10000	4000
645	36.57	0.94	13.7	956	10000	4000
645	39.38	0.88	12.7	988	10000	4000
645	43.64	0.79	11.5	1029	10000	4000
645	46.10	0.75	10.8	1050	10000	4000
645	48.30	0.71	10.3	1066	10000	4000
645	53.53	0.64	9.3	1100	10000	4000
645	55.00	0.63	9.1	1108	10000	4000
645	67.47	0.51	7.4	1163	10000	4000

IS063

Mn_2 [Nm]	i	Pn_1 [kW]	n2 [rpm]	Fr1 [N]	Fr2 D [N]	Fr2 C-L [N]
645	33.57	1.05	14.9	916	10000	4000
645	37.77	0.93	13.2	970	10000	4000
645	40.05	0.88	12.5	995	10000	4000
645	49.13	0.72	10.2	1072	10000	4000
645	55.29	0.64	9.0	1109	10000	4000
645	58.72	0.60	8.5	1127	10000	4000
645	65.85	0.53	7.6	1157	10000	4000
645	68.25	0.52	7.3	1166	10000	4000

5.7 IS REDUCTOR - 500 RPM

IS063

Mn_2 [Nm]	i	Pn_1 [kW]	n2 [rpm]	Fr1 [N]	Fr2 D [N]	Fr2 C-L [N]
645	73.63	0.48	6.8	1184	10000	4000
645	81.43	0.43	6.1	1206	10000	4000
645	99.89	0.35	5.0	1243	10000	4000
645	126.43	0.28	4.0	1278	10000	4000
645	150.85	0.23	3.3	1299	10000	4000
645	182.53	0.19	2.7	1318	10000	4000
645	185.05	0.19	2.7	1319	10000	4000
645	217.79	0.16	2.3	1333	10000	4000
645	267.16	0.13	1.9	1347	10000	4000

IS082

Mn_2 [Nm]	i	Pn_1 [kW]	n2 [rpm]	Fr1 [N]	Fr2 D [N]	Fr2 C-L [N]
591	7.34	4.31	68.1	1132	17494	4998
645	8.06	4.28	62.0	1145	17930	5123
699	9.94	3.76	50.3	1369	18000	5483
753	11.61	3.47	43.1	1494	18000	5754
806	12.75	3.38	39.2	1531	18000	5907
817	14.04	3.11	35.6	1647	18000	6113
828	15.43	2.87	32.4	1752	18000	6319
828	15.73	2.81	31.8	1775	18000	6364
828	17.29	2.56	28.9	1885	18000	6592
828	19.03	2.33	26.3	1985	18000	6828
828	20.14	2.20	24.8	2041	18000	6972
860	22.13	2.08	22.6	2092	18000	7186
860	24.00	1.92	20.8	2162	18000	7200
860	26.05	1.77	19.2	2227	18000	7200
968	27.29	1.90	18.3	2171	18000	7200
968	28.67	1.80	17.4	2210	18000	7200
968	29.60	1.75	16.9	2234	18000	7200
1075	31.78	1.81	15.7	2208	18000	7200
1075	34.91	1.65	14.3	2278	18000	7200
1075	35.50	1.62	14.1	2290	18000	7200
1075	40.05	1.44	12.5	2369	18000	7200
1075	43.05	1.34	11.6	2412	18000	7200
1075	50.25	1.14	9.9	2494	18000	7200
1075	54.27	1.06	9.2	2531	18000	7200
1075	61.98	0.93	8.1	2588	18000	7200

IS083

Mn_2 [Nm]	i	Pn_1 [kW]	n2 [rpm]	Fr1 [N]	Fr2 D [N]	Fr2 C-L [N]
1075	67.52	0.87	7.4	2620	18000	7200

5.7 IS REDUCTOR - 500 RPM

IS083

Mn_2 [Nm]	i	Pn_1 [kW]	n2 [rpm]	Fr1 [N]	Fr2 D [N]	Fr2 C-L [N]
1075	74.18	0.79	6.7	2653	18000	7200
1075	81.71	0.72	6.1	2684	18000	7200
1075	91.49	0.64	5.5	2717	18000	7200
1075	100.62	0.58	5.0	2741	18000	7200
1075	117.17	0.50	4.3	2776	18000	7200
1075	128.73	0.46	3.9	2795	18000	7200
1075	136.34	0.43	3.7	2806	18000	7200
1075	158.76	0.37	3.1	2831	18000	7200
1075	184.88	0.32	2.7	2853	18000	7200
1075	203.11	0.29	2.5	2865	18000	7200
1075	205.34	0.29	2.4	2867	18000	7200
1075	226.04	0.26	2.2	2878	18000	7200
1075	250.50	0.23	2.0	2888	18000	7200
1075	266.13	0.22	1.9	2894	18000	7200
1075	292.36	0.20	1.7	2902	18000	7200
1075	315.73	0.19	1.6	2909	18000	7200
1075	360.58	0.16	1.4	2918	18000	7200

IS102

Mn_2 [Nm]	i	Pn_1 [kW]	n2 [rpm]	Fr1 [N]	Fr2 D [N]	Fr2 C-L [N]
914	8.06	6.06	62.0	471	22000	6293
968	8.85	5.85	56.5	560	22000	6470
1021	10.88	5.02	45.9	905	22000	6939
1075	12.75	4.51	39.2	1116	22000	7312
1290	13.99	4.93	35.7	941	22000	7405
1344	15.43	4.66	32.4	1054	22000	7639
1398	17.21	4.34	29.1	1185	22000	7917
1505	19.00	4.24	26.3	1229	22000	8134
1505	20.83	3.86	24.0	1384	22000	8419
1505	22.13	3.64	22.6	1478	22000	8611
1613	24.28	3.55	20.6	1513	22000	8833
1613	26.33	3.27	19.0	1629	22000	9000
1613	29.87	2.89	16.7	1790	22000	9000
1613	32.40	2.66	15.4	1883	22000	9000
1505	34.91	2.31	14.3	2031	22000	9000
1613	38.30	2.25	13.1	2054	22000	9000
1505	42.53	1.89	11.8	2203	22000	9000
1398	44.00	1.70	11.4	2283	22000	9000
1720	47.13	1.95	10.6	2178	22000	9000
1505	50.25	1.60	9.9	2324	22000	9000
1398	55.14	1.36	9.1	2426	22000	9000
1720	59.40	1.55	8.4	2346	22000	9000
1720	67.84	1.36	7.4	2426	22000	9000

5.7 IS REDUCTOR - 500 RPM

IS103

Mn_2 [Nm]	i	Pn_1 [kW]	n2 [rpm]	Fr1 [N]	Fr2 D [N]	Fr2 C-L [N]
1720	74.18	1.27	6.7	2474	22000	9000
1720	81.39	1.15	6.1	2520	22000	9000
1720	89.77	1.05	5.6	2563	22000	9000
1720	100.15	0.94	5.0	2607	22000	9000
1720	110.55	0.85	4.5	2643	22000	9000
1720	121.29	0.77	4.1	2674	22000	9000
1720	128.73	0.73	3.9	2692	22000	9000
1720	141.24	0.66	3.5	2718	22000	9000
1720	173.78	0.54	2.9	2769	22000	9000
1720	188.51	0.50	2.6	2786	22000	9000
1720	203.11	0.46	2.5	2801	22000	9000
1720	222.85	0.42	2.2	2817	22000	9000
1720	224.76	0.42	2.2	2819	22000	9000
1720	274.20	0.34	1.8	2850	22000	9000
1720	280.89	0.33	1.8	2853	22000	9000
1720	292.36	0.32	1.7	2858	22000	9000
1720	320.79	0.29	1.6	2870	22000	9000
1720	345.60	0.27	1.4	2878	22000	9000
1720	394.69	0.24	1.3	2892	22000	9000

IS122

Mn_2 [Nm]	i	Pn_1 [kW]	n2 [rpm]	Fr1 [N]	Fr2 D [N]	Fr2 C-L [N]
1613	8.48	10.16	59.0	2875	29386	8396
1828	9.30	10.51	53.8	2838	29662	8475
1828	10.24	9.54	48.8	2941	30000	8813
2043	11.42	9.57	43.8	2939	30000	8975
2365	12.63	10.02	39.6	2891	30000	9004
2580	13.84	9.97	36.1	2896	30000	9127
2795	16.99	8.79	29.4	3022	30000	9729
3010	21.25	7.57	23.5	3153	30000	10473
3010	22.37	7.20	22.4	3193	30000	10707
3118	23.29	7.16	21.5	3197	30000	10779
3225	26.15	6.59	19.1	3258	30000	11200
3225	28.60	6.03	17.5	3318	30000	11200
3225	30.51	5.65	16.4	3359	30000	11200
3225	32.76	5.26	15.3	3401	30000	11200
3225	33.44	5.16	14.9	3412	30000	11200
3225	35.20	4.90	14.2	3440	30000	11200
3225	41.07	4.20	12.2	3515	30000	11200
3225	43.60	3.96	11.5	3541	30000	11200
2580	44.63	3.09	11.2	3634	30000	11200
2580	49.04	2.81	10.2	3664	30000	11200
2795	53.75	2.78	9.3	3667	30000	11200

5.7 IS REDUCTOR - 500 RPM

IS122

Mn_2 [Nm]	i	Pn_1 [kW]	n2 [rpm]	Fr1 [N]	Fr2 D [N]	Fr2 C-L [N]
3225	66.00	2.61	7.6	3685	30000	11200

IS123

Mn_2 [Nm]	i	Pn_1 [kW]	n2 [rpm]	Fr1 [N]	Fr2 D [N]	Fr2 C-L [N]
2903	64.84	2.44	7.7	3709	30000	11200
2903	71.07	2.23	7.0	3731	30000	11200
3225	78.46	2.24	6.4	3730	30000	11200
3225	87.27	2.02	5.7	3753	30000	11200
3225	105.91	1.66	4.7	3791	30000	11200
3225	112.52	1.57	4.4	3801	30000	11200
3225	123.33	1.43	4.0	3815	30000	11200
3225	130.04	1.35	3.8	3823	30000	11200
3225	133.78	1.32	3.7	3827	30000	11200
3225	151.43	1.16	3.3	3843	30000	11200
3225	177.53	0.99	2.8	3861	30000	11200
3225	194.59	0.91	2.6	3870	30000	11200
3225	215.60	0.82	2.3	3880	30000	11200
3225	238.93	0.74	2.1	3888	30000	11200
3225	255.54	0.69	2.0	3893	30000	11200

IS142

Mn_2 [Nm]	i	Pn_1 [kW]	n2 [rpm]	Fr1 [N]	Fr2 D [N]	Fr2 C-L [N]
1493	4.12	19.39	121.4	2211	32760	18500
1664	4.59	19.40	109.0	2210	33023	18500
1868	5.14	19.41	97.2	2208	33200	18500
2111	5.82	19.40	85.9	2210	33271	18500
2257	6.21	19.42	80.5	2207	33215	18500
2059	7.32	15.05	68.3	2812	35000	18500
2310	8.21	15.05	60.9	2812	35000	18500
2614	9.29	15.05	53.9	2811	35000	18500
2791	9.91	15.06	50.4	2811	35000	18500
3027	11.41	14.19	43.8	2930	35000	18500
2817	12.81	11.75	39.0	3267	35000	18500
2623	14.27	9.83	35.0	3534	35000	18500
2851	16.01	9.52	31.2	3576	35000	18500
3225	18.11	9.52	27.6	3576	35000	18500
3444	19.33	9.52	25.9	3576	35000	18500
3564	22.24	8.57	22.5	3708	35000	18500
3113	25.26	6.59	19.8	3981	35000	18500
3491	28.33	6.59	17.6	3982	35000	18500
3950	32.05	6.59	15.6	3982	35000	18500

5.7 IS REDUCTOR - 500 RPM

IS142

Mn_2 [Nm]	i	Pn_1 [kW]	n2 [rpm]	Fr1 [N]	Fr2 D [N]	Fr2 C-L [N]
4217	34.22	6.59	14.6	3982	35000	18500
4763	39.38	6.47	12.7	3998	35000	18500

IS143

Mn_2 [Nm]	i	Pn_1 [kW]	n2 [rpm]	Fr1 [N]	Fr2 D [N]	Fr2 C-L [N]
4314	45.77	5.15	10.9	4196	35000	18500
4805	50.97	5.15	9.8	4196	35000	18500
5090	57.17	4.86	8.8	4200	35000	18500
5133	64.68	4.33	7.7	4200	35000	18500
5242	69.06	4.15	7.2	4200	35000	18500
4551	79.45	3.13	6.3	4200	35000	18500
4773	98.81	2.64	5.1	4200	35000	18500
5089	110.05	2.52	4.5	4200	35000	18500
5111	123.44	2.26	4.0	4200	35000	18500
5204	139.64	2.03	3.6	4200	35000	18500
5145	149.10	1.88	3.4	4200	35000	18500
4086	157.49	1.42	3.2	4200	35000	18500
5020	171.55	1.60	2.9	4200	35000	18500
4551	175.41	1.42	2.9	4200	35000	18500
5105	196.74	1.42	2.5	4200	35000	18500
5069	222.57	1.24	2.2	4200	35000	18500
5248	237.63	1.21	2.1	4200	35000	18500
5151	273.41	1.03	1.8	4200	35000	18500

IS152

Mn_2 [Nm]	i	Pn_1 [kW]	n2 [rpm]	Fr1 [N]	Fr2 D [N]	Fr2 C-L [N]
2766	4.06	36.42	123.1	2588	39530	19400
3086	4.53	36.41	110.3	2588	39910	19400
3133	5.20	32.19	96.1	2943	40000	19400
3163	5.71	29.61	87.5	3159	40000	19400
3306	6.52	27.10	76.7	3370	40000	19400
3503	7.28	25.73	68.7	3485	40000	19400
3796	8.36	24.28	59.8	3606	40000	19400
4032	9.17	23.50	54.5	3671	40000	19400
4496	10.42	23.07	48.0	3708	40000	19400
3554	12.46	15.25	40.1	4365	40000	19400
3964	13.91	15.24	36.0	4365	40000	19400
4552	15.97	15.24	31.3	4365	40000	19400
4997	17.53	15.24	28.5	4365	40000	19400
5676	19.91	15.24	25.1	4365	40000	19400
6526	22.88	15.25	21.9	4364	40000	19400

5.7 IS REDUCTOR - 500 RPM

IS152

Mn_2 [Nm]	i	Pn_1 [kW]	n2 [rpm]	Fr1 [N]	Fr2 D [N]	Fr2 C-L [N]
6546	27.11	12.91	18.4	4561	40000	19400
7186	29.75	12.91	16.8	4560	40000	19400
8162	33.79	12.91	14.8	4560	40000	19400
8266	38.84	11.38	12.9	4689	40000	19400

IS153

Mn_2 [Nm]	i	Pn_1 [kW]	n2 [rpm]	Fr1 [N]	Fr2 D [N]	Fr2 C-L [N]
6752	40.10	9.19	12.5	4889	40000	19400
7536	44.76	9.19	11.2	4889	40000	19400
8455	51.38	8.99	9.7	4906	40000	19400
8873	56.39	8.59	8.9	4938	40000	19400
9455	64.05	8.06	7.8	4982	40000	19400
8363	73.63	6.20	6.8	5135	40000	19400
7638	87.16	4.79	5.7	5200	40000	19400
8525	97.27	4.79	5.1	5200	40000	19400
9787	111.67	4.79	4.5	5200	40000	19400
10251	122.57	4.57	4.1	5200	40000	19400
9828	139.21	3.85	3.6	5200	40000	19400
7663	154.02	2.72	3.2	5200	40000	19400
8691	160.02	2.97	3.1	5200	40000	19400
8798	176.81	2.72	2.8	5200	40000	19400
9656	194.06	2.72	2.6	5200	40000	19400
10055	220.42	2.49	2.3	5200	40000	19400
8900	253.36	1.92	2.0	5200	40000	19400

6.1 CONDICIONES DE VENTA

Todos los suministros efectuados por Motovario se rigen exclusivamente por las condiciones generales de venta que se pueden encontrar en nuestra página web:

http://www.motovario.com/spa/empresa/condiciones-de-venta