TECHNICAL CATALOGUE

S SERIES

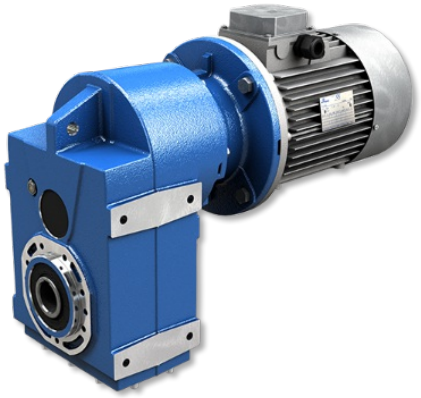

SHAFT**MOUNTED** GEARED**MOTORS**

STANDARD **IEC**

DIRECTIVE **ATEX** Ex

MOTOVARIO®

HEART OF MOTION

a TECO Group company

INDEX

1. GENERAL INFORMATION

1.1 ATEX 5

1.2 SYMBOLS AND FORMULAS 6

1.2.1 Symbols 6

1.2.2 Formulas 7

1.3 PRODUCT SELECTION 8

1.4 SERVICE FACTOR 9

1.5 INSTALLATION 10

2. PRODUCT INFORMATION

2.1 DESIGN FEATURES 11

2.2 TYPOLOGY 12

2.2.1 Designation 12

2.2.2 Versions 13

2.2.3 Modularity 14

2.3 MOUNTING POSITIONS 15

2.3.1 Mounting positions 15

2.3.2 Position of terminal box 15

2.4 THERMAL POWER 16

2.4.1 Information 16

2.4.2 Verification 16

2.5 CRITICAL APPLICATIONS 17

2.5.1 Critical applications 17

2.5.2 Information 17

2.6 MOTOR FLANGE AVAILABILITY 18

2.7 OUTPUT SHAFT BEARINGS 21

2.8 OVERHUNG LOAD 22

2.8.1 Information 22

2.8.2 Input 22

2.8.3 Output 23

2.9 LUBRICATION 24

2.9.1 Information 24

2.9.2 Lubricants 24

2.9.3 Special lubricants 25
2.9.4 Quantity 26
2.10 MOMENTS OF INERTIA 27

3. DIMENSIONS

3.1 REDUCERS/GEARED MOTORS 28
3.1.1 S 052...123 28
3.1.2 CS 052...123 29
3.1.3 IS 052...123 30
3.2 ELECTRIC MOTORS 31
3.2.1 Electric motors 31
3.2.2 Standard high efficiency (TS), high (TH) and premium (TP) motors 33
3.2.3 Nominal power - [kW] 34
3.3 WEIGHT 35
3.4 END SHAFT 36

4. ACCESSORIES AND OPTIONS

4.1 LOW SPEED SHAFTS 37
4.2 OUTPUT FLANGE 38
4.3 SHAFT MOUNTING FASTENING 39
4.4 BACKSTOP DEVICE 40
4.5 OUTPUT SHAFT WITH SHRINK DISC 41
4.6 REINFORCED OIL SEALS FOR OUTPUT SHAFT 42
4.7 ASSEMBLING/DISASSEMBLING KIT 43

5. PERFORMANCES

5.1 S GEARED MOTORS (50Hz) 44
5.2 IS GEAR REDUCER - 1750 RPM 94
5.3 IS GEAR REDUCER - 1400 RPM 99
5.4 IS GEAR REDUCER - 1140 RPM 104

INDEX

5.5 IS GEAR REDUCER - 900 RPM 109

5.6 IS GEAR REDUCER - 700 RPM 114

5.7 IS GEAR REDUCER - 500 RPM 119

6. SALES CONDITIONS

6.1 SALES CONDITIONS 124

1.1 ATEX

ATEX Certification

The gear reducers described in this catalogue, defined as “ATEX”, were designed and manufactured in compliance with: Directive **ATEX 2014/34/UE.**
If used by following the instructions set forth in the INSTALLATION AND USE INSTRUCTIONS Atex Manual (provided as an attachment to the supplied products), ATEX MOTOVARIO gear reducers can be used in one of the following environments:

Group II
Category 2G and 2D
Zone 1/21 for gases and dusts (gas group IIB) with the following protection methods:
Protection against ignition:
EN13463-5 (c) constructional safety
EN13463-8 (k) liquid immersion

Group II
Category 3G and 3D
Zone 2/22 for gases and dusts
Protection against ignition:
EN13463-5 (c) constructional safety

The room temperature envisaged for the application must range between -20 and + 40 °C (*).
The products certified for use in Zone 1/21 can be used also in Zone 2/22. To identify the environment inside which the Atex certification of the special gear reducer is limited, refer to Atex Performance Tables.

The classified units are manufactured and marked to comply with the provisions of Directive **ATEX 2014/34/UE**.

UNINTENDED USE
It is strictly forbidden to use the gear reducer:

- inside an area with equipment category I (mines likely to become endangered by firedamp);
- inside an Area classified as more severe than specified on product label;
- at a room temperature not falling within the specified limits (*);
- under conditions (P1, n1, M2) that, even individually, exceed the values specified inside Atex Performance Tables.

1.2 SYMBOLS AND FORMULAS

1.2.1 Symbols

Physical dimension	Symbol	Symbol units of measure	Input	Output
Power	P	[kW]	P_1	P_2
Requested power	Pr	[kW]	Pr_1	Pr_2
Nominal power	Pn	[kW]	Pn_1	Pn_2
Torque	M	[Nm]	M_1	M_2
Nominal torque	Mn	[Nm]		Mn_2
Requested torque	Mr	[Nm]	Mr_1	Mr_2
Speed	n	[rpm]	n_1	n_2
Force	F	[N]		
Radial load	Fr	[N]	Fr_1	Fr_2
Axial load	Fa	[N]	Fa_1	Fa_2
Reduction ratio	i			
Dynamic efficiency	η_d			
Service factor	f.s.			
Static	s			
Dynamic	d			
Calculated	c			
Maximum	max			
Minimum	min			
Moment of inertia	J	[kgm^2]	J_1	
Ambient temperature	T_{amb}	[°C]		
Dimension		[mm]		

1.2.2 Formulas

REDUCER		
Starting or stopping time	$t = v / a$	[s]
Velocity in rotary motion	$v = \pi * d * n / 60$ $v = \omega * r$	[m/s]
Speed velocity Angular velocity	$n = 60 * v / (\pi * d)$ $\omega = v / r$	[rpm] [rad/s]
Acceleration or deceleration according to a starting / stopping time	$a = v / t$	[m/s^2]
Angular acceleration	$\alpha = n / (9{,}55 * t)$ $\alpha = \omega / t$	[rad/s^2]
Starting or stopping distance (according to acceleration / deceleration or angular velocity)	$s = a * t^2 / 2$ $s = v * t / 2$	[m]
Horizontal translation force	$F = \mu * m * g$	[N]
Vertical translation force (lifting)	$F = m * g$	
Inclined plane translation force	$F = m * g (\mu * \cos\beta + \mathrm{sen}\beta)$	
m= mass [kg]; g= gravity acceleration [m/s^2]; μ= friction coefficent; β= angle of inclination		
Moment of inertia	$J = m * v^2 / \omega^2$	[kgm^2]
Torque	$M = F * d / 2$ $M = J * \omega / t$	[Nm]

MOTOR and GEARMOTOR		
Starting time	$ta = (Jext+Jm)*n_n/9{,}55+(M_{peak}-Mr)$	[s]
Braking time	$ts = (Jext+Jm)*n_n/9{,}55+(M_{peak}+Mr)$	[s]
Motor rotation angle during starting	$\varphi = n_n * ta / 19{,}1$	[rad]
Motor rotation angle during braking	$\varphi = n_n * ts / 19{,}1$	[rad]
Power available at the shaft of single phase motor	$P = V * I * \eta * \cos\omega$	[W]
Power available at the shaft of three phase motor	$P = 1{,}73 * V * I * \eta * \cos\omega$	[W]

RUNNING at 60Hz		
Speed velocity at 60Hz	$n_{60Hz} = 1{,}2 * n_{50Hz}$	[rpm]
Power at 60Hz	$P1_{60Hz} = P1_{50Hz} * V_{60Hz}/V_{50Hz}$	[kW]
If input voltage at 60 Hz (V_{60Hz}) corresponds to winding voltage at 50 Hz (V_{50Hz}), power doesn't change $P1_{60Hz} = P1_{50Hz}$ If input voltage at 60 Hz (V_{60Hz}) is 20% higher than winding voltage at 50 Hz (V_{50Hz}), power increases by 20% $P1_{60Hz} = 1{,}2\ P1_{50Hz}$		
Torque at 60Hz	$M_{60hz} = M_{50Hz} * P1_{60Hz} / (1{,}2 * P1_{50Hz})$	[Nm]
Service factor at 60Hz	$f.s._{60Hz} = f.s._{50Hz} * 1{,}175 * P1_{50Hz} / P1_{60Hz}$	-

1.3 PRODUCT SELECTION

For correctly selecting a gear reducer or geared motor, several essential pieces of data are required:

1. The rotational input speed to the gear reducer **(n_1)** and the rotational output speed **(n_2).** Through these two values it is possible to calculate the reduction ratio **(i)** of the gear reducer using the following formula: **$i=n_1/n_2$**
2. The torque required by the application **(Mr_2)**.

The geared motor or gear reducer can be selected once this data is known.
This guide helps you to select the right product in just a few steps:

Geared motor selection

1. Determine the application's actual service factor **(s.f.)**. This parameter depends on the type of load of the powered machine, the number of starts per hour and the hours of operation (refer to the "Service factor" paragraph).
2. Calculate the input power **Pr_1** using the required torque value **Mr_2**, the speed **n_2** and dynamic efficiency value. **$Pr1=(Mr_2*n_2)/(9550*\eta_d)$.** The dynamic efficiency value depends on the type of gear reducer and on the number of gear reduction stages. (To calculate the efficiency value see its page).
3. Consult the geared motor performance tables and identify a normalised power value **Pn_1** exceeding the required power **Pr_1**, such that: **$Pn_1 \geq Pr_1$**
4. Once the suitable nominal power has been identified, select the geared motor capable of generating the rotational speed closest to the desired n_2 value and with service factor s.f. greater or equal to that required by the application.

For Atex product selection, use the service factor "f.s. Atex".

In the geared motor selection tables the combinations include 2-pole, 4-pole and 6-pole motors powered at 50Hz.

Gear reducer selection

1. Determine the application's service factor **(s.f.)** (consult to the "Service factor" paragraph on its page) .
2. Calculate the reduction ratio i from the requested output speed **n_2** and from the input speed **n1. $i=n_1/n_2$**
3. Calculate the torque **Mc_2** for selecting the gear reducer through the torque required by the application **Mr_2** and the service factor s.f.: **$Mc_2=Mr_2*(f.s.)$**
4. Consult the Gear Reducer Performance tables looking for the reducer that, with the reduction ratio closer to the calculated one, has a nominal torque **Mn_2** so that: **$Mn_2 \geq Mc_2$**

For Atex product Selection, refer to Atex Gear Reducer Performance tables.

Checks

Once the gear reducer or geared motor has been selected, the following checks should be performed:

A. **Thermal power**

The gear reducer's thermal power must be equal to or greater than the installed mechanical power, or the power required by the application according to the indications contained in the section (refer to the "Thermal power" paragraph).

B. **Maximum torque**

Generally, the maximum torque (peak instantaneous load) that can be applied to the gear reducer must not exceed 200% of the nominal torque **Mn_2** (ATEX - M_2max).

C. **Radial loads**

1. Verify that the radial loads acting on the input and/or output shafts are within with the values indicated in the catalogue. If they exceed these values, increase the size of the gear reducer or modify the external load capacity. During the checking phase, it is important to remember that the values indicated in the catalogue refer to loads acting on the mid-point of the shaft protrusion, therefore, if the load is applied to a different position, appropriate formulas must be used to calculate the admissible load in the desired position (refer to the "Radial loads" paragraph).
2. If accessory output shafts are present, make sure that the applied load is compatible with shaft size. If help is needed: contact MOTOVARIO TECHNICAL SERVICE.

D. If an electric motor is going to be fitted to the selected gear reducer, check for its applicability by referring to the configuration table (see paragraph "Configurations"). From IEC 180 motors, verify if necessary to support the motor with feet. In case of need please contact MOTOVARIO TECHNICAL SERVICE.

(Atex version, only) Consult catalogue to make sure that Version, Mounting and Accessories meet Atex certification requirements.

1.4 SERVICE FACTOR

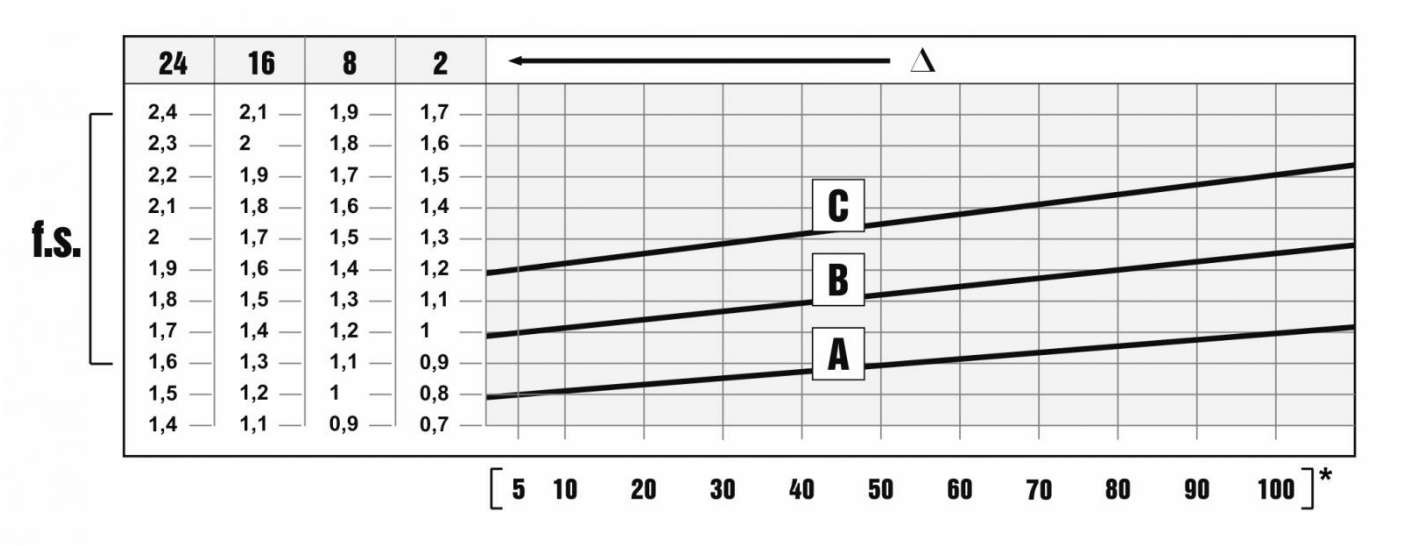

The service factor (f.s.) depends on the operating conditions the gear reducer is subjected to.
The parameters that need to be taken into consideration to select the most adequate service factor correctly comprise:

- type of load of the operated machine : A - B - C
- length of daily operating time: hours/day (Δ)
- start-up frequency: starts/hour (*)

LOAD:

- **A** - uniform = fa ≤ 0,3
- **B** - moderate shocks = fa ≤ 3
- **C** - heavy shocks = fa ≤ 10

fa = Je/Jm

- Je [kgm^2] moment of reduced external inertia at the drive-shaft
- Jm [kgm^2] moment of inertia of motor

If fa > 10 call our Technical Service.

A. Screw feeders for light materials, fans, assembly lines, conveyor belts for light materials, small mixers, lifts, cleaning machines, fillers, control machines.
B. Winding devices, woodworking machine feeders, goods lifts, balancers, threading machines, medium mixers, conveyor belts for heavy materials, winches, sliding doors, fertilizer scrapers, packing machines, concrete mixers, crane mechanisms, milling cutters, folding machines, gear pumps.
C. Mixers for heavy materials, shears, presses, centrifuges, rotating supports, winches and lifts for heavy materials, grinding lathes, stone mills, bucket elevators, drilling machines, hammer mills, cam presses, folding machines, turntables, tumbling barrels, vibrators, shredders.

1.5 INSTALLATION

To install the gear reducer it is necessary to note the following recommendations:

- Check the correct direction of rotation of the gear reducer output shaft before fitting the unit to the machine.
- In the case of particularly lengthy periods of storage (4/6 months), if the oil seal is not immersed in the lubricant inside the unit, it is recommended to change it since the rubber could stick to the shaft or may even have lost the elasticity it needs to function properly.
- Whenever possible, protect the gear reducer against solar radiation and bad weather.
- Ensure the motor cools correctly by ensuring good passage of air from the fan side.
- In the case of ambient temperatures < -5°C or > +40°C call the Technical Service.
- The various parts (pulleys, gear wheels, couplings, shafts, etc.) must be mounted on the shafts using special threaded holes or other systems that anyhow ensure correct operation without risking damage to the bearings or external parts of the units. Lubricate the surfaces in contact to avoid seizure or oxidation.
- Painting must definitely not go over rubber parts and the holes on the breather plugs, if any.
- For units equipped with oil plugs, replace the closed plug used for shipping with the special breather plug.
- Check the correct level of the lubricant through the indicator, if there is one.
- Starting must take place gradually, without immediately applying the maximum load.
- When there are parts, objects or materials under the motor drive that can be damaged by even limited spillage of oil, special protection should be fitted.

Assembling motor on pam flange

When the unit is supplied without motor, it is necessary to follow these recommendation to ensure the correct assembly of the electric motor. Check that the tolerances for the motor shaft and flange correspond to the “standard”. Carefully clean the shaft, spigot and surfaces of the flange removing traces of paint and dirt, and confirm the key is fitted correctly. Fit the half coupling/sleeve to the motor shaft (see picture) taking care to ensure the motor shaft and bearings are not damaged by avoiding excessive force and where necessary using assembly equipment. Place the couplings elastic element onto the motor half coupling and position the motor up to the gear unit ensuring the coupling element is aligned with the driven half coupling. Complete the assembly using the fixing bolts. Key-ways with tightened tolerances.

In case of Atex units, fit gasket (to be requested to Motovario) between PAM flange and motor.

Flexible joint

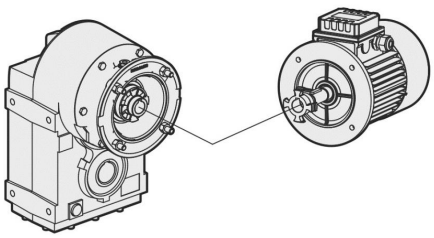

PAM Sleeve

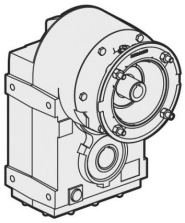

2.1 DESIGN FEATURES

Motovario products are supplied with the following surface treatment features:

Grey-coloured cast-iron cases for gears
- Die-cast materials are always painted.

Painting specifications:
- Orange-peel blue epoxy-polyester RAL 5010. Polyester resin based heat-hardening powders, altered with epoxy resins.

Mechanical properties
- Tests carried out onto degreased Unichim white lattens (film thickness: 60 microns) comply with the following specifications: adherence (ISO2409).

Heat resistance
- 24 HOURS AT 150°C.

Corrosion strength
- ASTM B 117/97 salt fog from 100 to 500 hours depending on the support's preliminary treatment.

Performance:
- Loading capacity in accordance with DIN 3990, ISO 6336, AGMA 2101, ISO 10300, DIN 3991, ISO 281, DIN 743.

Efficiency η**:**
- The efficiency is the ratio between the output power P_2 and the power absorbed by thegear reducer P_1: $\eta = P_2/P_1$.

S-range shaft-mounted reducers have an average value equal to:
S..2 stages = 0,96
S..3 stages = 0,94

2.2 TYPOLOGY

2.2.1 Designation

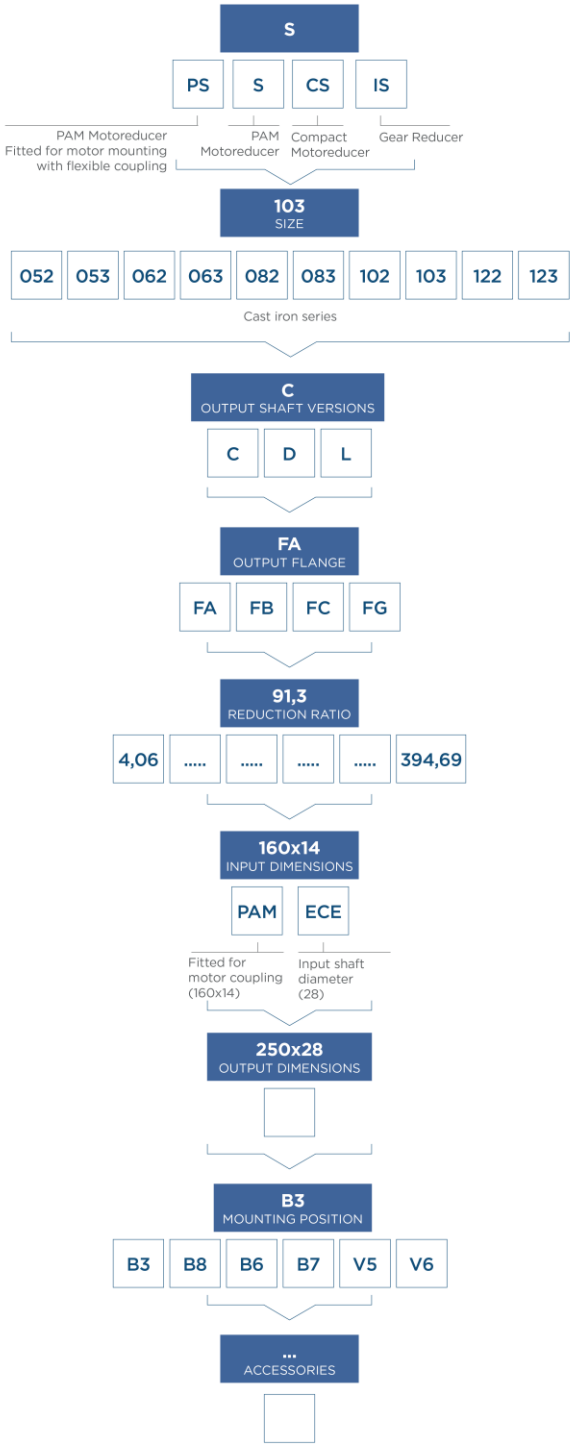

2.2.2 Versions

S... C - S... D - S... L

S.. C FOOT-FLANGE MOUNTING / HOLLOW SHAFT

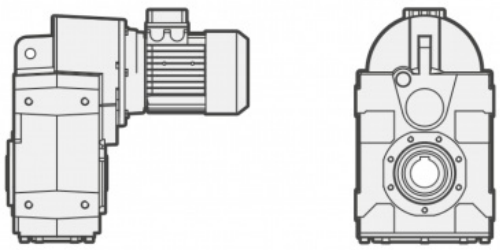

S.. D FOOT-FLANGE MOUNTING / D SOLID SHAFT

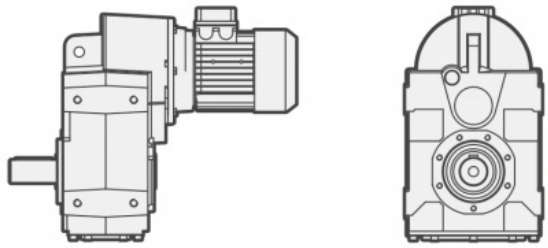

S.. L FOOT-FLANGE MOUNTING / SHRINK DISC SHAFT

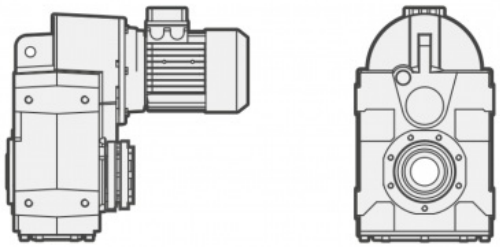

ATEX GEAR REDUCERS
SL VERSION IS AVAILABLE FOR 3G/3D CERTIFICATION ONLY

2.2 TYPOLOGY

2.2.3 Modularity

S GREY CAST IRON SERIES

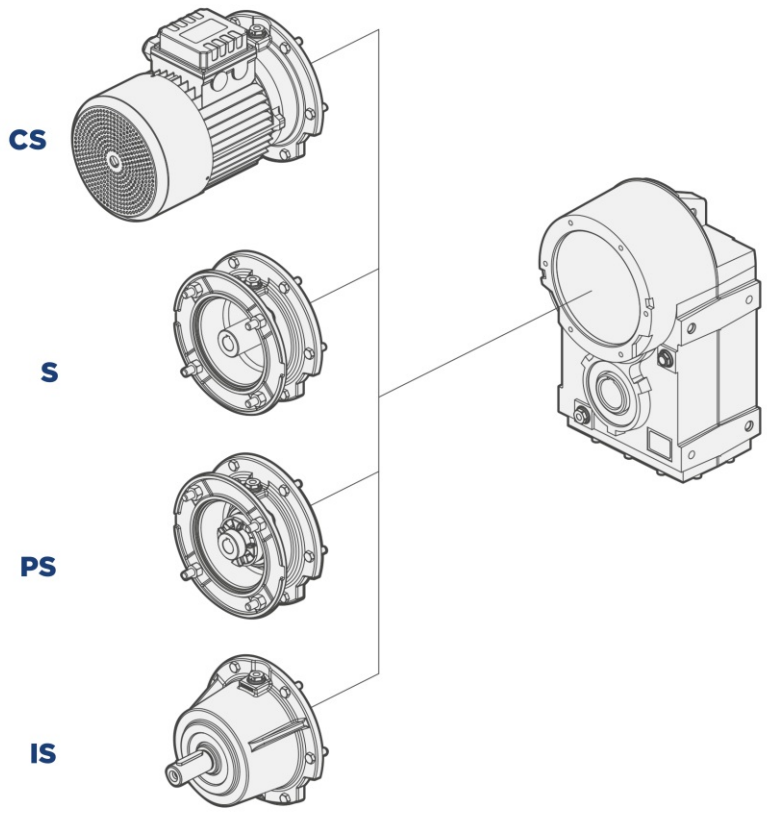

CS
Compact electric motor versions

S
Fitted for motor coupling version (PAM)

PS
Fitted for motor mounting with flexible coupling

IS
Input shaft versions

2.3 MOUNTING POSITIONS

2.3.1 Mounting positions

The mounting position of the gear unit identifies its space orientation. B3 mounting position, as from a technical point of view, ensures lower oil splash, better lubrication and less heating.

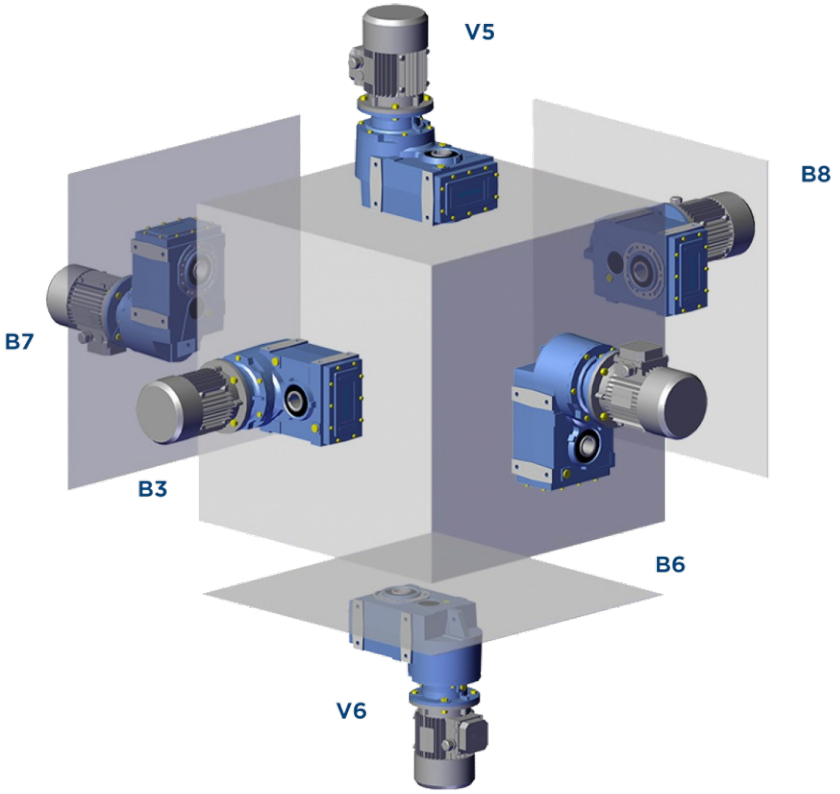

2.3.2 Position of terminal box

Unless otherwise specified when ordering, the gear reducer is supplied with terminal box in position 1.

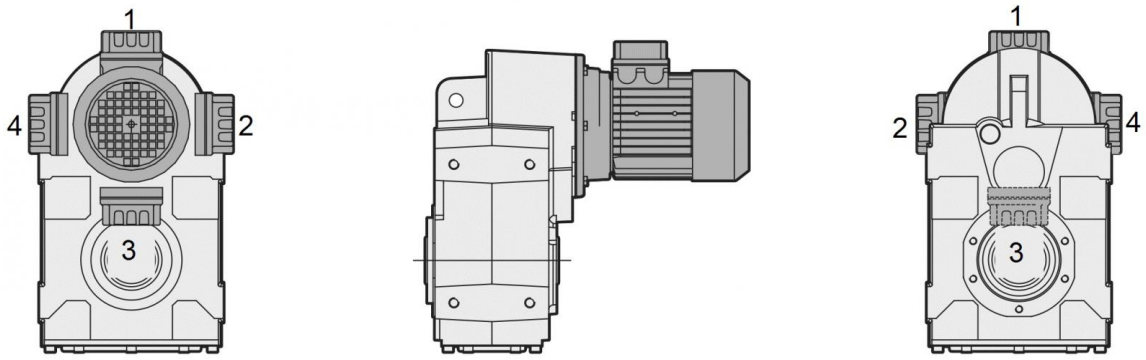

2.4 THERMAL POWER

2.4.1 Information

The scheme below indicates the nominal thermal power capacity Pth [kW] according to the following conditions:

- mounting position B3
- continuous operation at input speed <= 1,500 rpm
- environment temperature T_{amb}=25°C
- sea level altitude
- air speed around the gear reducer >=1m/s
- absence of external radial and/or axial loads

n_1 = 1500rpm	
	Pth [kW]
S052	7
S062	9,5
S082	15,5
S102	20,5
S122	34,5

A correct lubrication and a proper running condition of the gearbox are guaranteed only applying an input power not exceeding Pth (at the above reference conditions) (T oil max=95°C).

NOTE: Normally, three stages gearboxes do not require thermal power verification because the thermal rating usually exceed the mechanical one.

2.4.2 Verification

Application check

Except for continuous operating times below two hours and successive pauses capable of bringing the gear reducer back to ambient temperature, for each application it is peremptory to verify the gear reducer's thermal limit according to the following formula: **P_1 < Pth * Fc * Fv * Fa,** where:

- P_1 = input power to the gear reducer [kW]
- Pth = thermal power at the reference conditions [kW] (see above table)
- Fc = ambient and operating temperature correction factor
- Fv = ventilation correction factor
- Fa = altitude correction factor

The correction factors refer to different operating conditions compared to the reference conditions, and are provided by the following ISO14179 tables:

		Duty per hour of operation %				
	Fc	100	80	70	40	20
Ambient temperature °C	10	1,15	1,21	1,32	1,55	2,07
	18	1,07	1,12	1,23	1,44	1,93
	25	1,00	1,05	1,15	1,35	1,80
	30	0,93	0,98	1,07	1,26	1,67
	40	0,83	0,87	0,95	1,12	1,49
	43	0,75	0,79	0,86	1,01	1,35
	50	0,67	0,70	0,77	0,90	1,21

Altitude (m)	Fa
0*	1
750	0,95
1500	0,9
2250	0,85
3000	0,81

Ventilation correction factor	Fv
Stagnant air (<0,5 m/s)	0.75
Indoor installation with slight ventilation	1
Indoor installation with good ventilation (>1,4 m/s)	1.4
Installazione all'aperto (>3,7 m/s)	1.9

*Sea level

In case of operation at input speeds exceeding 2000 rpm, or ambient temperatures greater than 40°C, it is advisable to contact out technical department.

2.5 CRITICAL APPLICATIONS

2.5.1 Critical applications

S	050	060	080	100	125
2000 < n1 < 3000	✔	✔	✔	B	B
V6	B	B	B	B	B
n1 > 3000	B	B	B	A	A
...L : V5 - V6	B	B	B	B	B
(*) ...L	B	B	B	B	B

✔ Verified application
A Application not recommended
B Check the application and/or call our technical service

(*) The shrink disc is designed only to transmit the output torque.
In case of mounting position with radial and/or axial loads, please contact the technical support.

2.5.2 Information

The performance given in the catalogue correspond to mounting position B3 or similar, when the first stage is not entirely immersed in oil. For other mounting positions and/or particular input speeds, refer to the tables that highlight different critical situations for each size of gear reducer. It is also necessary to take due consideration of and carefully assess the following applications by calling our Technical Service:

- To avoid the use as multiplier.
- Use in services that could be hazardous for people if the gear reducer fails.
- Applications with especially high inertia.
- Use as a lifting winch.
- Applications with high dynamic strain on the case of the gear reducer.
- In places with T_{amb} under -5°C or over 40°C.
- Use in chemically aggressive environments.
- Use in a salty environment.
- Mounting positions not envisaged in the catalogue.
- Use in radioactive environments.
- Use in environments pressures other than atmospheric pressure.

Avoid applications where even partial immersion of the reducer is required.
In the presence of overloading due to full load, braking, shocks or other static and dynamic causes, please verify that the peak torque is less than $2*Mn_2$.

2.6 MOTOR FLANGE AVAILABILITY

B11 = Compact electric motor versions.
These tables report all possible dimensions. Please verify service factor.
*For motor size 063 the PB version does not exist.

NOTE Atex geared motors (versions with compact electric motor B11): available for 3G/3D certification, only.

CS - S - PS 052				
i	071	080	090	100-112
8,63	B5-B11	B5-B11	B5-B11	B5-B11
11,14	B5-B11	B5-B11	B5-B11	B5-B11
12,00	B5-B11	B5-B11	B5-B11	B5-B11
13,66	B5-B11	B5-B11	B5-B11	B5-B11
15,27	B5-B11	B5-B11	B5-B11	B5-B11
16,29	B5-B11	B5-B11	B5-B11	B5-B11
18,63	B5-B11	B5-B11	B5-B11	B5-B11
19,73	B5-B11	B5-B11	B5-B11	B5-B11
21,04	B5-B11	B5-B11	B5-B11	B5-B11
21,53	B5-B11	B5-B11	B5-B11	B5-B11
24,07	B5-B11	B5-B11	B5-B11	B5-B11
25,20	B5-B11	B5-B11	B5-B11	B5-B11
25,79	B5-B11	B5-B11	B5-B11	B5-B11
27,81	B5-B11	B5-B11	B5-B11	B5-B11
30,00	B5-B11	B5-B11	B5-B11	
32,55	B5-B11	B5-B11	B5-B11	B5-B11
33,00	B5-B11	B5-B11	B5-B11	
34,09	B5-B11	B5-B11	B5-B11	B5-B11
36,55	B5-B11	B5-B11	B5-B11	
38,75	B5-B11	B5-B11	B5-B11	
39,90	B5-B11	B5-B11	B5-B11	B5-B11
42,63	B5-B11	B5-B11	B5-B11	
46,00	B5-B11	B5-B11	B5-B11	
47,20	B5-B11	B5-B11	B5-B11	
52,25	B5-B11	B5-B11	B5-B11	
57,86	B5-B11	B5-B11	B5-B11	
59,42	B5-B11	B5-B11	B5-B11	
72,83	B5-B11	B5-B11	B5-B11	

CS - S - PS 053				
i	*063	071	080	090
36,50	B5-B11	B5-B11	B5-B11	B5-B11
47,14	B5-B11	B5-B11	B5-B11	B5-B11
57,79	B5-B11	B5-B11	B5-B11	B5-B11
63,74	B5-B11	B5-B11	B5-B11	B5-B11
78,14	B5-B11	B5-B11	B5-B11	B5-B11
74,20	B5-B11	B5-B11	B5-B11	B5-B11
95,84	B5-B11	B5-B11	B5-B11	B5-B11
117,48	B5-B11	B5-B11	B5-B11	B5-B11
137,45	B5-B11	B5-B11	B5-B11	B5-B11
177,55	B5-B11	B5-B11	B5-B11	B5-B11
198,45	B5-B11	B5-B11	B5-B11	
217,64	B5-B11	B5-B11	B5-B11	B5-B11
256,33	B5-B11	B5-B11	B5-B11	
314,21	B5-B11	B5-B11	B5-B11	

2.6 MOTOR FLANGE AVAILABILITY

CS - S - PS 062				
i	071	080	090	100-112
8,00		B5-B11	B5-B11	B5-B11
8,92		B5-B11	B5-B11	B5-B11
9,55		B5-B11	B5-B11	B5-B11
10,65		B5-B11	B5-B11	B5-B11
11,71		B5-B11	B5-B11	B5-B11
13,06		B5-B11	B5-B11	B5-B11
13,36		B5-B11	B5-B11	B5-B11
15,94		B5-B11	B5-B11	B5-B11
16,16		B5-B11	B5-B11	B5-B11
19,29		B5-B11	B5-B11	B5-B11
19,55		B5-B11	B5-B11	B5-B11
23,18	B5-B11	B5-B11	B5-B11	B5-B11
23,75	B5-B11	B5-B11	B5-B11	B5-B11
25,14	B5-B11	B5-B11	B5-B11	B5-B11
27,66	B5-B11	B5-B11	B5-B11	B5-B11
30,00	B5-B11	B5-B11	B5-B11	B5-B11
33,93	B5-B11	B5-B11	B5-B11	B5-B11
36,57	B5-B11	B5-B11	B5-B11	B5-B11
39,38	B5-B11	B5-B11	B5-B11	B5-B11
43,64	B5-B11	B5-B11	B5-B11	B5-B11
46,10	B5-B11	B5-B11	B5-B11	
48,30	B5-B11	B5-B11	B5-B11	B5-B11
53,53	B5-B11	B5-B11	B5-B11	B5-B11
55,00	B5-B11	B5-B11	B5-B11	
67,47	B5-B11	B5-B11	B5-B11	

CS - S - PS 063			
i	071	080	090
33,57	B5-B11	B5-B11	B5-B11
37,77	B5-B11	B5-B11	B5-B11
40,05	B5-B11	B5-B11	B5-B11
49,13	B5-B11	B5-B11	B5-B11
55,29	B5-B11	B5-B11	B5-B11
58,72	B5-B11	B5-B11	B5-B11
65,85	B5-B11	B5-B11	B5-B11
68,25	B5-B11	B5-B11	B5-B11
73,63	B5-B11	B5-B11	B5-B11
81,43	B5-B11	B5-B11	B5-B11
99,89	B5-B11	B5-B11	B5-B11
126,43	B5-B11	B5-B11	B5-B11
150,85	B5-B11	B5-B11	B5-B11
182,53	B5-B11	B5-B11	B5-B11
185,05	B5-B11	B5-B11	B5-B11
217,79	B5-B11		
267,16	B5-B11		

CS - S - PS 082				
i	080	090	100-112	132
7,34	B5-B11	B5-B11	B5-B11	B5-B11
8,06	B5-B11	B5-B11	B5-B11	B5-B11
9,94	B5-B11	B5-B11	B5-B11	B5-B11
11,61	B5-B11	B5-B11	B5-B11	B5-B11
12,75	B5-B11	B5-B11	B5-B11	B5-B11
14,04	B5-B11	B5-B11	B5-B11	B5-B11
15,43	B5-B11	B5-B11	B5-B11	B5-B11
15,73	B5-B11	B5-B11	B5-B11	B5-B11
17,29	B5-B11	B5-B11	B5-B11	B5-B11
19,03	B5-B11	B5-B11	B5-B11	B5-B11
20,14	B5-B11	B5-B11	B5-B11	B5-B11
22,13	B5-B11	B5-B11	B5-B11	B5-B11
24,00	B5-B11	B5-B11	B5-B11	B5-B11
26,05	B5-B11	B5-B11	B5-B11	B5-B11
27,29	B5-B11	B5-B11	B5-B11	B5-B11
28,67	B5-B11	B5-B11	B5-B11	B5-B11
29,60	B5-B11	B5-B11	B5-B11	B5-B11
31,78	B5-B11	B5-B11	B5-B11	B5-B11
34,91	B5-B11	B5-B11	B5-B11	B5-B11
35,50	B5-B11	B5-B11	B5-B11	
40,05	B5-B11	B5-B11	B5-B11	B5-B11
43,05	B5-B11	B5-B11	B5-B11	B5-B11
50,25	B5-B11	B5-B11	B5-B11	
54,27	B5-B11	B5-B11	B5-B11	
61,98	B5-B11	B5-B11	B5-B11	

CS - S - PS 083				
i	071	080	090	100-112
67,52		B5-B11	B5-B11	B5-B11
74,18		B5-B11	B5-B11	B5-B11
81,71		B5-B11	B5-B11	B5-B11
91,49		B5-B11	B5-B11	B5-B11
100,62		B5-B11	B5-B11	B5-B11
117,17	B5-B11	B5-B11	B5-B11	
128,73	B5-B11	B5-B11	B5-B11	
136,34	B5-B11	B5-B11	B5-B11	B5-B11
158,76	B5-B11	B5-B11	B5-B11	
184,88	B5-B11	B5-B11	B5-B11	
203,11	B5-B11	B5-B11	B5-B11	
205,34	B5-B11	B5-B11	B5-B11	B5-B11
226,04	B5-B11	B5-B11	B5-B11	B5-B11
250,50	B5-B11	B5-B11	B5-B11	
266,13	B5-B11	B5-B11	B5-B11	
292,36	B5-B11	B5-B11	B5-B11	
315,73	B5-B11	B5-B11	B5-B11	
360,58	B5-B11	B5-B11	B5-B11	

2.6 MOTOR FLANGE AVAILABILITY

CS - S - PS 102					
i	080	090	100-112	132	160
8,06	B5-B11	B5-B11	B5-B11	B5-B11	B5
8,85	B5-B11	B5-B11	B5-B11	B5-B11	B5
10,88	B5-B11	B5-B11	B5-B11	B5-B11	B5
12,75	B5-B11	B5-B11	B5-B11	B5-B11	B5
13,99	B5-B11	B5-B11	B5-B11	B5-B11	B5
15,43	B5-B11	B5-B11	B5-B11	B5-B11	
17,21	B5-B11	B5-B11	B5-B11	B5-B11	B5
19,00	B5-B11	B5-B11	B5-B11	B5-B11	
20,83	B5-B11	B5-B11	B5-B11	B5-B11	
22,13	B5-B11	B5-B11	B5-B11	B5-B11	
24,28	B5-B11	B5-B11	B5-B11	B5-B11	
26,33	B5-B11	B5-B11	B5-B11	B5-B11	
29,87	B5-B11	B5-B11	B5-B11	B5-B11	
32,40	B5-B11	B5-B11	B5-B11	B5-B11	
34,91	B5-B11	B5-B11	B5-B11	B5-B11	
38,30	B5-B11	B5-B11	B5-B11	B5-B11	
42,53	B5-B11	B5-B11	B5-B11	B5-B11	
44,00	B5-B11	B5-B11	B5-B11		
47,13	B5-B11	B5-B11	B5-B11	B5-B11	
50,25	B5-B11	B5-B11	B5-B11		
55,14	B5-B11	B5-B11	B5-B11		
59,40	B5-B11	B5-B11	B5-B11		
67,84	B5-B11	B5-B11	B5-B11		

CS - S - PS 103				
i	071	080	090	100-112
74,18		B5-B11	B5-B11	B5-B11
81,39		B5-B11	B5-B11	B5-B11
89,77		B5-B11	B5-B11	B5-B11
100,15		B5-B11	B5-B11	B5-B11
110,55	B5-B11	B5-B11	B5-B11	B5-B11
121,29	B5-B11	B5-B11	B5-B11	B5-B11
128,73	B5-B11	B5-B11	B5-B11	B5-B11
141,24	B5-B11	B5-B11	B5-B11	B5-B11
173,78	B5-B11	B5-B11	B5-B11	B5-B11
188,51	B5-B11	B5-B11	B5-B11	B5-B11
203,11	B5-B11	B5-B11	B5-B11	B5-B11
222,85	B5-B11	B5-B11	B5-B11	B5-B11
224,76	B5-B11	B5-B11	B5-B11	B5-B11
274,20	B5-B11	B5-B11	B5-B11	B5-B11
280,89	B5-B11	B5-B11	B5-B11	
292,36	B5-B11	B5-B11	B5-B11	
320,79	B5-B11	B5-B11	B5-B11	
345,60	B5-B11	B5-B11	B5-B11	
394,69	B5-B11	B5-B11	B5-B11	

CS - S - PS 122							
i	080	090	100-112	132	160	180	200
8,48					B5	B5	B5
9,30					B5	B5	B5
10,24					B5	B5	B5
11,42					B5	B5	B5
12,63					B5	B5	B5
13,84					B5	B5	B5
16,99					B5	B5	B5
21,25			B5-B11	B5-B11	B5	B5	
22,37			B5-B11	B5-B11	B5	B5	
23,29			B5-B11	B5-B11	B5	B5	
26,15			B5-B11	B5-B11	B5	B5	
28,60			B5-B11	B5-B11	B5	B5	
30,51			B5-B11	B5-B11	B5	B5	
32,76			B5-B11	B5-B11	B5	B5	
33,44			B5-B11	B5-B11	B5	B5	
35,20			B5-B11	B5-B11	B5	B5	
41,07			B5-B11	B5-B11	B5	B5	
43,60	B5-B11	B5-B11	B5-B11	B5-B11			
44,63	B5-B11	B5-B11	B5-B11	B5-B11			
49,04	B5-B11	B5-B11	B5-B11	B5-B11			
53,75	B5-B11	B5-B11	B5-B11	B5-B11			
66,00	B5-B11	B5-B11	B5-B11	B5-B11			

CS - S - PS 123				
i	080	090	100-112	132
64,84			B5-B11	B5-B11
71,07			B5-B11	B5-B11
78,46			B5-B11	B5-B11
87,27			B5-B11	B5-B11
105,91			B5-B11	B5-B11
112,52	B5-B11	B5-B11	B5-B11	B5-B11
123,33	B5-B11	B5-B11	B5-B11	B5-B11
130,04	B5-B11	B5-B11	B5-B11	B5-B11
133,78	B5-B11	B5-B11	B5-B11	B5-B11
151,43	B5-B11	B5-B11	B5-B11	B5-B11
177,53	B5-B11	B5-B11	B5-B11	B5-B11
194,59	B5-B11	B5-B11	B5-B11	B5-B11
215,60	B5-B11	B5-B11	B5-B11	B5-B11
238,93	B5-B11	B5-B11	B5-B11	B5-B11
255,54	B5-B11	B5-B11	B5-B11	
280,10	B5-B11	B5-B11	B5-B11	
301,16	B5-B11	B5-B11	B5-B11	
343,93	B5-B11	B5-B11	B5-B11	

2.7 OUTPUT SHAFT BEARINGS

S	S050		S060		S080	
Versions	Standard	On request	Standard	On request	Standard	On request
C	1	/	1	2	1 (Ø40)	2 (Ø40)
						1 (Ø45)
D	1	/	1	/	2	/
L	1	/	1	/	1	/

S	S100		S125	
Versions	Standard	On request	Standard	On request
C	1	2	1	2
D	2	/	2	/
L	1	/	1	/

1 - Ball Bearing

2 - Roller bearings

/ - Not available

2.8 OVERHUNG LOAD

2.8.1 Information

The value of the admissible radial load [N] is given in the tables relating to the performance of the gear reducer at issue. It is related to the load applied on the centre line of the shaft and in the most unfavourable conditions of angle of application and direction of rotation. The maximum admissible axial loads are 1/5 of the value of the given radial load when they are applied in combination with the radial load. The tables relating to the output shafts give the maximum admissible value. This value must never be exceeded since it relates to the strength of the case. Particular conditions of radial load higher than the limits of the catalogue may occur. In this case, call our Technical Sevice and provide details on the application: direction of the load, direction of rotation of the shaft, type of service. In case of double extension shafts with radial load applied on both ends, the max. admissible radial loads must be defined according to the specific running conditions, in this case call our Technical Service. The radial load on the shaft is calculated with the following formula: **Fre=(2000*M*fz)/D≤Fr1 or Fr2**

- **Fre** [N] Resulting radial load
- **M** [Nm] Torque on the shaft
- **D** [mm] Diameter of the transmission member mounted on the shaft
- **Fr1-Fr2** [N] Value of the maximum admitted radial load (see relative tables)
- **fz** = 1,1 gear pinion - 1,4 chain wheel - 1,7 v-pulley - 2,5 flat pulley

2.8.2 Input

When the radial load is not on the centre line of the shaft, it is necessary to adjust the admissible radial load Fr1 with the following formula: **Frx=(Fr1*a)/(b+x)**

- **a** , **b** = values given in the tables
- **x** = distance from the point of application of the load to the shaft shoulder

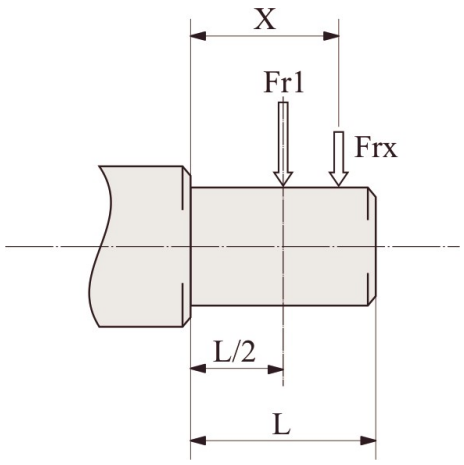

IS	052/053	062/063	082/083	102/103	122/123
a	105	105	137	137	175
b	80	80	108	108	135
Fr1 max(**)	1500	2500	3600	3600	7200

(**Fr1 max) Max admissible value of the reducer in static conditions and/or for limited operations. For continuous overhung loads please check the values on the performances tables calculated according to the casing, the shaft and bearings.

2.8.3 Output

When the radial load is not on the centre line of the shaft, it is necessary to adjust the admissible radial load Fr2 with the following formula: **Frx=(Fr2*a)/(b+x)**

- **a** , **b** = values given in the tables
- **x** = distance from the point of application of the load to the shaft shoulder

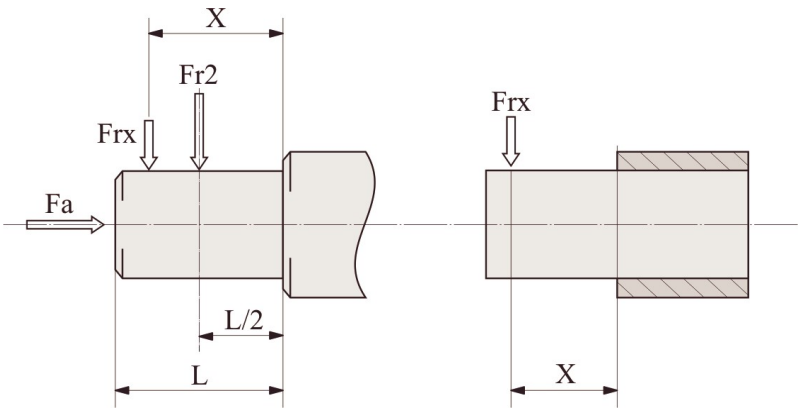

S	052/053	062/063	082/083	102/103	122/123
a	125	145	190	225	265
b	96	116	150	175	202
D (Fr2 max**)	6000	10000	18000	22000	30000
C (Fr2 max**)	6000	4000	7200	9000	11200

(**Fr2 max) Max admissible value of the reducer in static conditions and/or for limited operations. For continuous overhung loads please check the values on the performances tables calculated according to the casing, the shaft and bearings.

2.9 LUBRICATION

2.9.1 Information

In cases of ambient temperatures not envisaged in the table, call our Technical Service. In the case of temperatures under -30°C or over 60°C it is necessary to use oil seals with special properties. For operating ranges with temperatures under 0°C it is necessary to consider the following:

1. The motors need to be suitable for operation at the envisaged ambient temperature.
2. The power of the electric motor needs to be adequate for exceeding the higher starting torques required.
3. In case of cast-iron gear reducers, pay attention to impact loads since cast iron may have problems of fragility at temperatures under -15°C.
4. During the early stages of service, problems of lubrication may arise due to the high level of viscosity taken on by the oil and so it is wise to have a few minutes of rotation under no load.

For Atex gear reducers:

- Change oil as specified in the "Maintenance" table of the relevant "Use and Installation Instructions" manual (supplied with products).
- The use of oils other than the original one is forbidden.

2.9.2 Lubricants

Specifications of lubricants recommended by Motovario.
All units are supplied with ENI BLASIA 220 oil, unless otherwise specified by the client.

	S052/3 ÷ 122/3	
	Mineral oil	
T_{amb}°C ISO/SAE	(-5) ÷ (+40) ISO VG220	(-15) ÷ (+25) ISO VG150
ENI	BLASIA 220	BLASIA 150
SHELL	OMALA OIL220	OMALA OIL150
KLUBER	Kluberoil GEM 1-220N	Kluberoil GEM 1-150N
MOBIL	MOBILGEAR 600 XP220	MOBILGEAR 600 XP150
CASTROL	ALPHA SP 220	ALPHA SP 150
BP	ENERGOL GR-XP220	ENERGOL GR-XP150

2.9.3 Special lubricants

	T_{amb}°C	Polyglicol synthetic oil
ENI	(-30) ÷ (+30)	Blasia S 150 (ISO VG150)
	(-20) ÷ (+40)	Blasia S 220 (ISO VG220)
MOBIL	(-45) ÷ (+0)	SCH 624 (ISO VG32)
	(-40) ÷ (+5)	SCH 626 (ISO VG68)
KLUBER	(-40) ÷ (+5)	Klubersynth GH 6-32 (ISO VG32)
	(-35) ÷ 10)	Klubersynth GH 6-80 (ISO VG80)
	(-30) ÷ (+40)	Klubersynth GH 6-150 (ISO VG150)
	(-25) ÷ (+40)	Klubersynth GH 6-220 (ISO VG220)
	(-15) ÷ (+50)	Klubersynth GH 6-460 (ISO VG460)
	(-10) ÷ (+70)	Klubersynth GH 6-680 (ISO VG680)

	T_{amb}°C	Polyglicol synthetic oil for food grade
KLUBER	(-30) ÷ (+15)	Klubersynth UH1-6 100 (ISO VG100)
	(-25) ÷ (+40)	Klubersynth UH1-6 220 (ISO VG220)
	(-15) ÷ (+40)	Klubersynth UH1-6 320 (ISO VG320)
	(-15) ÷ (+50)	Klubersynth UH1-6 460 (ISO VG460)
	(-10) ÷ (+50)	Klubersynth UH1-6 680 (ISO VG680)

If ‘special’ lubricant is required please contact for Technical Assistance.

2.9.4 Quantity

- For the gear reducers S ... series with 2, 3 stages it is always necessary to specify the envisaged position.
- The gear reducers S series ... with 2,3 stages sizes 050, 060 are supplied complete with lubricant, have no oil plugs and need no maintenance.
- The gear reducers S ... series with 2,3 stages sizes 080,100,125 are supplied complete with lubricant and are fitted with oil plugs to suit any mounting position included in the catalogue.

It is recommended, after installation, to replace the closed plug used for transportation with the supplied breather plug. The amount of oil in the table (litres ~) are merely indicative only and for the proper topping up you will have to refer to the level plug or the dipstick, if any. Any deviations in level can depend on construction tolerances but also by the placement of the unit or by the mounting surface at the customers' premises. For this reason it is appropriate that the customer checks and, if necessary, restores the level when the unit are installed.

S - CS	052/053	062/063	082/083	102/103	122/123
B3	2,05	2,4	6	9	14,7
B8	1,8	2,3	4	6	11,8
B6	2,4	2,9	5,7	8	16
B7	2,1	2,6	4,5	6,8	11,3
V5	2,8	3,5	6,8	10,3	19
V6	2,4	2,9	6,4	9,9	18

2.10 MOMENTS OF INERTIA

The following values of J1 moment of inertia are only estimated, referred to the maximum calculated, and to the gearbox input side.

S-2/3	J_1 [Kg*m2]
052/053	0,0004
062/063	0,0006
082/083	0,0015
102/103	0,0034
122/123	0,0085

3.1.1 S 052...123

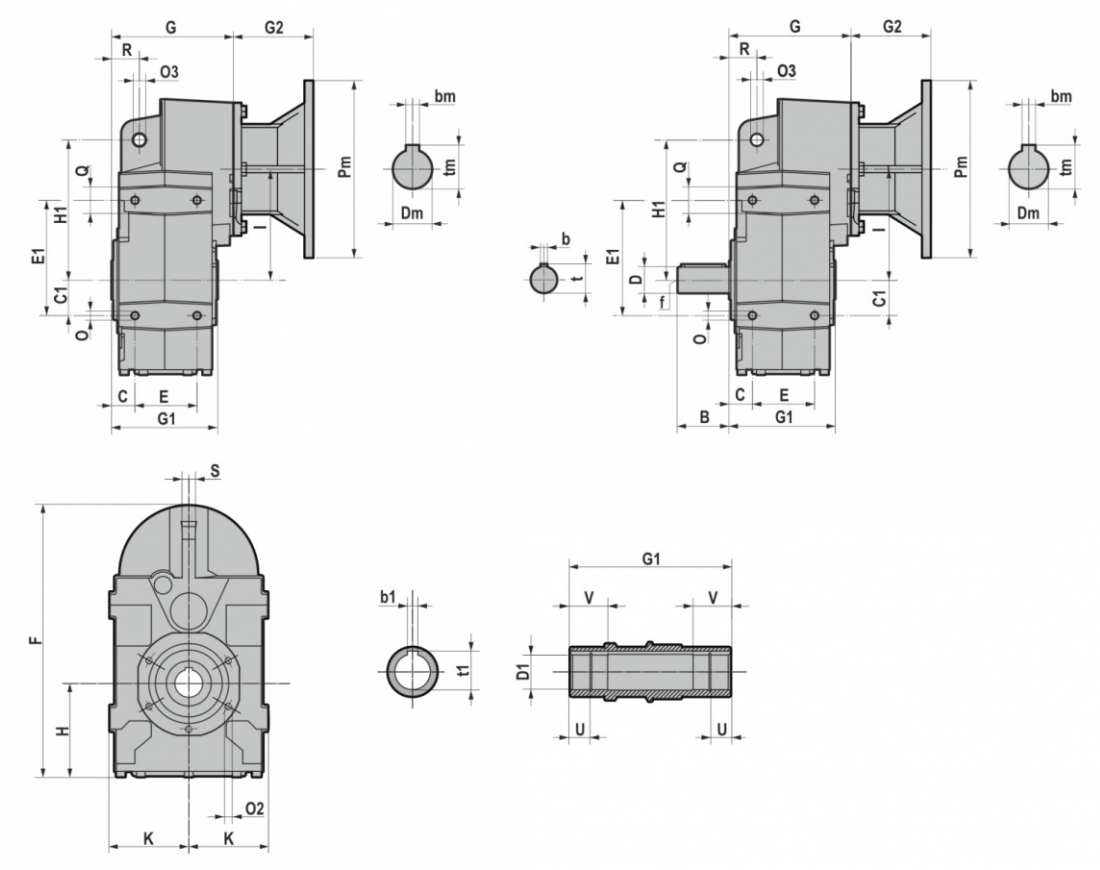

	D1 H7	b1	t1	U	V	B	D	b	t	f	C	C1	E	E1	F	G	G1	H	H1	I	K	O	O3	O2	Q	R	S
S052/S053	30	8	33	13,8	30	58	30 j6	8	33	M10	27	40	70	130	311	137,5	120	107	158	125	90,5	M10x18	14	M8x16 (n.5)	30	31,5	15
S062/S063	35	10	38	12	35	58	35 j6	10	38	M12	30	45	80	147	320	158,5	140	97	170	143	96,5	M12x20	14	M8x16 (n.5)	40	32	15
S082/S083	40	12	43	22,3	42	80	40 k6	12	43	M16	37	60	106	190	383	207	180	107	218	170	112,5	M12x20	14	M10x20 (n.7)	44	41	20
	45	14	48	22,3	42																						
S102/S103	45	14	49	22,3	50	100	50 k6	14	54	M16	37	70	137	275	426	217,5	210	119	278	180	130	M16x26	22	M12x22 (n.7)	50	50	20
	50	14	54	25	50																						
S122/S123	60	18	64	28	70	120	60 m6	18	64	M20	43	100	165	310	549	257	240	157	346	235	165	M16x30	22	M14x28 (n.7)	50	62	26

		G2		
IEC	**Pm x Dm**	050-060	080-100	125
063	**140x11**	57	/	/
071	**160x14**	69	49,0	/
080	**200x19**	90	70,0	60,5
090	**200x24**	90	70,0	60,5
100-112	**250x28**	105	85,0	75,5
132	**300x38**	/	110,0	100,5
160	**350x42**	/	157,5	148
180	**350x48**	/	157,5	148
200	**400x55**	/	/	185

B5	Pm	Dm	bm	tm
063	140	11	4	12,8
071	160	14	5	16,3
080	200	19	6	21,8
090	200	24	8	27,3
100	250	28	8	31,3
112	250	28	8	31,3
132	300	38	10	41,3
160	350	42	12	45,3
180	350	48	14	51,8
200	400	55	16	59,3

3.1.2 CS 052...123

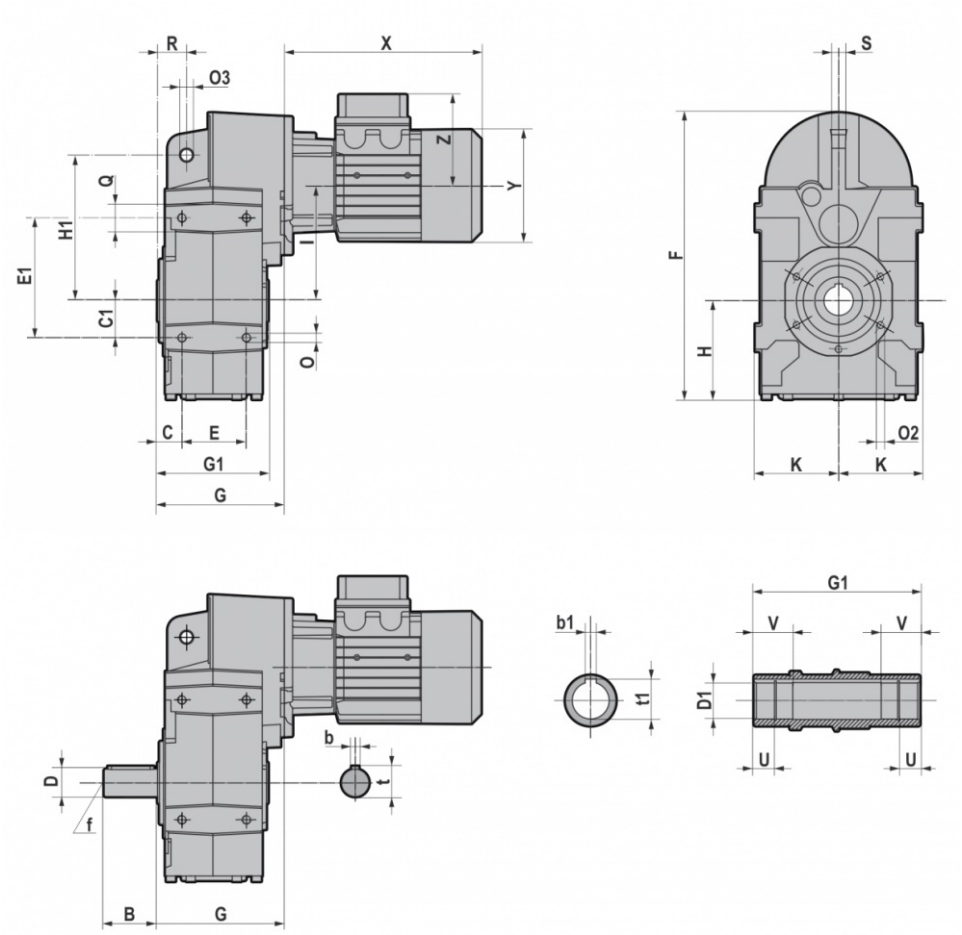

	D1 H7	b1	t1	U	V	B	D	b	t	f	C	C1	E	E1	F	G	G1	H	H1	I	K	O	O3	O2	Q	R	S
CS052/CS053	30	8	33	13,8	30	58	30 j6	8	33	M10	27	40	70	130	311	137,5	120	107	158	125	90,5	M10x18	14	M8x16 (n.5)	30	31,5	15
CS062/CS063	35	10	38	12	35	58	35 j6	10	38	M12	30	45	80	147	320	158,5	140	97	170	143	96,5	M12x20	14	M8x16 (n.5)	40	32	15
CS082/CS083	40	12	43	22,3	42	80	40 k6	12	43	M16	37	60	106	190	383	207	180	107	218	170	112,5	M12x20	14	M10x20 (n.7)	44	41	20
	45	14	48	22,3	42																						
CS102/CS103	45	14	49	22,3	50	100	50 k6	14	54	M16	37	70	137	275	426	217,5	210	119	278	180	130	M16x26	22	M12x22 (n.7)	50	50	20
	50	14	54	25	50																						
CS122/CS123	60	18	64	28	70	120	60 m6	18	64	M20	43	100	165	310	549	257	240	157	346	235	165	M16x30	22	M14x28 (n.7)	50	62	26

T (IE1 - IE2)									
		063	071	080	090S	090L	100	112	132S	132M/L
CS052/CS053 CS062/CS063	X	215	241	268	296	321	333	351	/	/
	Y	121	139	158	173	173	191	211	/	/
	Z	104	112	122	130	130	139	154	/	/
CS082/CS083 CS102/CS103	X	/	221	248	276	301	335	356	405	443
	Y	/	139	158	173	173	191	211	249	249
	Z	/	112	122	130	130	139	154	194	194
CS122/CS123	X	/	/	/	267	292	326	347	396	434
	Y	/	/	/	173	173	191	211	249	249
	Z	/	/	/	130	130	139	154	194	194

TB (IE1 - IE2)									
		063	071	080	090S	090L	100	112	132S	132M/L
CS052/CS053 CS062/CS063	X	273	306,5	341	373	398	415	448	/	/
	Y	121	139	158	173	173	191	211	/	/
	Z	119	129	137	157	157	168	183	/	/
CS082/CS083 CS102/CS103	X	/	286,5	321	353	378	417	453	505	547
	Y	/	139	158	173	173	191	211	249	249
	Z	/	129	137	157	157	168	183	230	230
CS122/CS123	X	/	/	/	343	368	407	443	495	537
	Y	/	/	/	173	173	191	211	249	249
	Z	/	/	/	157	157	168	183	230	230

3.1.3 IS 052...123

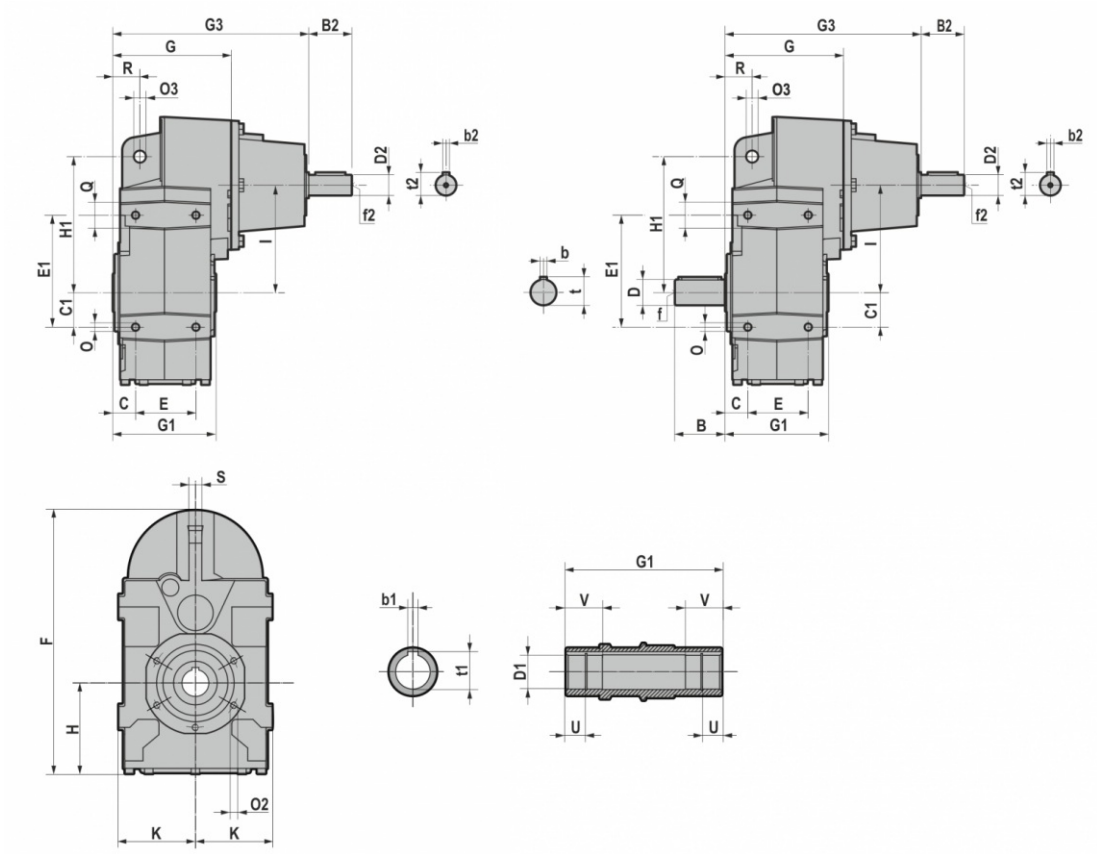

	D1 H7	b1	t1	U	V	B	D	b	t	f	C	C1	E	E1	F	G	G1	H	H1	I	K	O	O3	O2	Q	R	S
IS052/IS053	30	8	33	13,8	30	58	30 j6	8	33	M10	27	40	70	130	311	137,5	120	107	158	125	90,5	M10x18	14	M8x16 (n.5)	30	31,5	15
IS062/IS063	35	10	38	12	35	58	35 j6	10	38	M12	30	45	80	147	320	158,5	140	97	170	143	96,5	M12x20	14	M8x16 (n.5)	40	32	15
IS082/IS083	40	12	43	22,3	42	80	40 k6	12	43	M16	37	60	106	190	383	207	180	107	218	170	112,5	M12x20	14	M10x20 (n.7)	44	41	20
	45	14	48	22,3	42																						
IS102/IS103	45	14	49	22,3	50	100	50 k6	14	54	M16	37	70	137	275	426	217,5	210	119	278	180	130	M16x26	22	M12x22 (n.7)	50	50	20
	50	14	54	25	50																						
IS122/IS123	60	18	64	28	70	120	60 m6	18	64	M20	43	100	165	310	549	257	240	157	346	235	165	M16x30	22	M14x28 (n.7)	50	62	26

	G3	B2	D2	b2	t2	f2
IS052/IS053	227,5	50	24 j6	8	27	M8
IS062/IS063	248,5	50	24 j6	8	27	M8
IS082/IS083	320	60	28 j6	8	31	M10
IS102/IS103	330,5	60	28 j6	8	31	M10
IS122/IS123	383,5	80	38 k6	10	41	M12

3.2.1 Electric motors

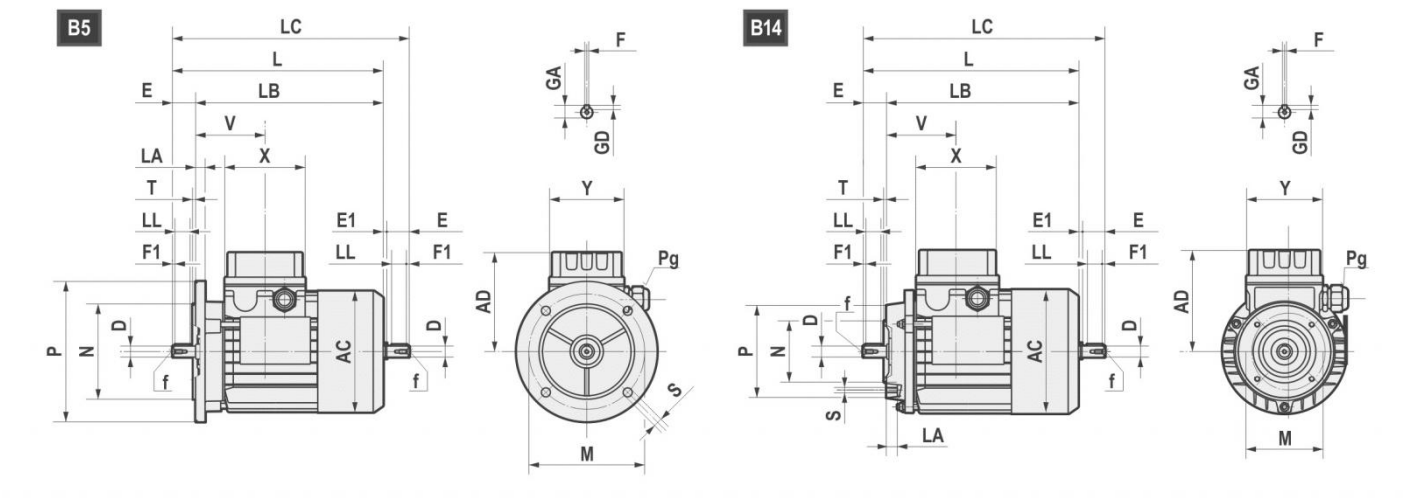

	AC	AD	L	LB	LC	X	Y	V	D	E	E1	f	F1	GA	F	GD
063	121	104	211	188	235,5	80	74	69	11 j6	23	1,5	M4x10	2,5	12,5	4	4
071	139	112	238,5	208,5	271	80	74	74,5	14 j6	30	2,5	M5x12.5	3	16	5	5
080	158	122	272,5 *(296)	232,5 *(256)	314 *(337)	80	74	78	19 j6	40	1,5	M6x16	5	21,5	6	6
90S	173	146	298 *(331)	248 *(281)	349,5 *(381)	98	98	89,5	24 j6	50	1,5	M8x19	5	27	8	7
90L	173	146	323 *(356)	273 *(306)	374,5 *(408)	98	98	89,5	24 j6	50	1,5	M8x19	5	27	8	7
100	191	155	368	308	431,5	98	98	97,5	28 j6	60	3,5	M10x22	7,5	31	8	7
112	211	170	382,5 *(408)	322,5 *(348)	447 *(472)	98	98	100	28 j6	60	3,5	M10x22	7,5	31	8	7
132S	249	195	452	372	536,5	118	118	115,5	38 k6	80	4	M12x28	10	41	10	8
132L	249	195	490	410	574,5	118	118	115,5	38 k6	80	4	M12x28	10	41	10	8
160S	249	195	520	410	/	118	118	115,5	42k6	100	/	M16x36	10	45	12	8

*TP80B4,TP90S4, TP90L4, TP90S6, TP112M4, TP112M6

B5	M	N	P	LA	S	T
063	115	95	140	10	9	3
071	130	110	160	10	9,5	3,5
080	165	130	200	12	11	3,5
090	165	130	200	12	11	3,5
100	215	180	250	15	14	4
112	215	180	250	14,5	14	4
132	265	230	300	20	14	3,5
160	300	250	350	13	18,5	3,5

B14	M	N	P	LA	S	T
063	75	60	90	10	M5	2,5
071	85	70	105	10,5	M6	2,5
080	100	80	120	10,5	M6	3
090	115	95	140	11,5	M8	3
100	130	110	160	15	M8	3,5
112	130	110	160	11,5	M8	3,5
132	165	130	200	20,5	M10	3,5
160	215	180	250	-	M12	4

3.2 ELECTRIC MOTORS

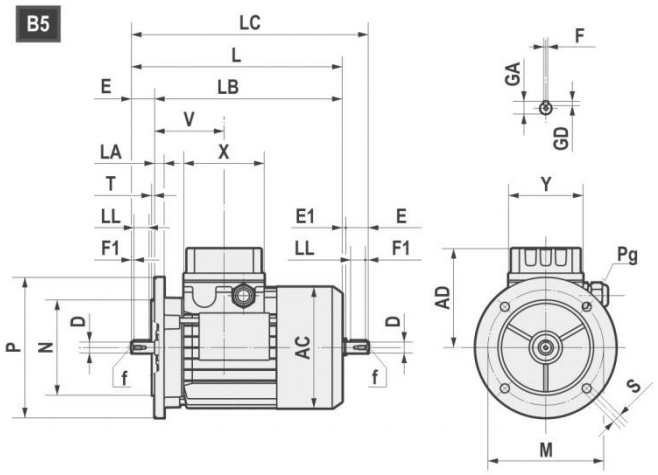

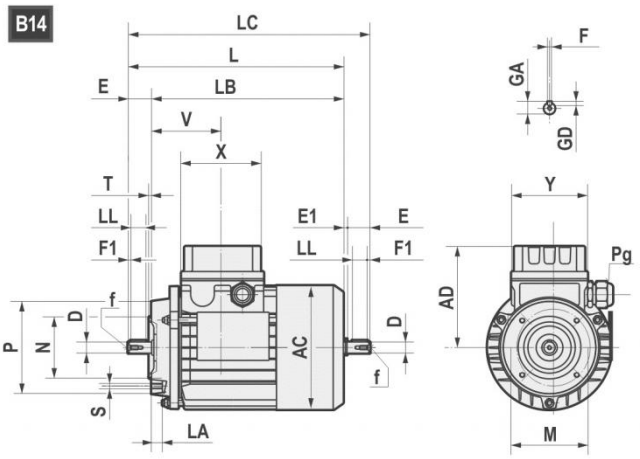

		AC	AD	L	LB	X	D	E	f	GA	F	GD	LL	Pg	
160M	2-4-6	314	251	600	490	158	42	110	M16	45	12	8	90	2-M40x1,5	1-M16x1,5
160L	2-4-6	314	251	645	535	158	42	110	M16	45	12	8	90	2-M40x1,5	1-M16x1,5
180M	2-4	355	267	680	570	158	48	110	M16	51,5	14	9	100	2-M40x1,5	1-M16x1,5
180L	4-6	355	267	720	610	158	48	110	M16	51,5	14	9	100	2-M40x1,5	1-M16x1,5
200L	2-4-6	397	300	785	675	187	55	110	M20	59	16	10	100	2-M50x1,5	1-M16x1,5
225S	4	446	325	820	680	187	60	140	M20	64	18	11	125	2-M50x1,5	1-M16x1,5
225M	2	446	325	815	705	187	55	110	M20	59	16	10	100	2-M50x1,5	1-M16x1,5
225M	4-6	446	325	845	705	187	60	140	M20	64	18	11	125	2-M50x1,5	1-M16x1,5
250M	2-4-6	485	360	910	770	238	60	140	M20	64	18	11	125	2-M63x1,5	1-M16x1,5
250M	2-4-6	485	360	910	770	238	65	140	M20	69	18	11	125	2-M63x1,5	1-M16x1,5
280S	2-4-6	547	390	970	830	238	65	140	M20	69	18	11	125	2-M63x1,5	1-M16x1,5
280S	2-4-6	547	390	970	830	238	75	140	M20	79,5	20	12	125	2-M63x1,5	1-M16x1,5
280M	2-4-6	547	390	1025	885	238	65	140	M20	69	18	11	125	2-M63x1,5	1-M16x1,5
280M	2-4-6	547	390	1025	885	238	75	140	M20	79,5	20	12	125	2-M63x1,5	1-M16x1,5

B5	M	N	P	LA	S	T
160	300	250	350	13	19	5
180	300	250	350	15	19	5
200	350	300	400	17	19	5
225	400	350	450	20	19	5
250	500	450	550	22	19	5
280	500	450	550	22	19	5

3.2.2 Standard high efficiency (TS), high (TH) and premium (TP) motors

Motovario, three-phase, single polarity motors are available in three different versions (IE1-IE2-IE3) in compliance with standard 60034-30-1 (see table). The efficiency value is calculated according to the method set forth in standard IEC 60034-2-1.

1. IE1: Standard efficiency TS series.
2. IE2: High efficiency TH series
3. IE3: Premium efficiency TP series.

Table of Motovario commercial availability

		EFFICIENCY LEVEL		
NOMINAL POWER [kW]	POLES	IE1	IE2	IE3
0,09 ≤ Pn < 0,75	2 - 4 - 6	TS-TBS	-	-
0,75 ≤ Pn ≤ 11	2 - 4	TBS	-	-
0,75 ≤ Pn ≤ 5,5	6	TBS	TH-TBH	TP-TBP
0,75 ≤ Pn ≤ 9,2	2 - 4	-	TH-TBH	-
0,75 ≤ Pn ≤ 7,5	2 - 4	-	-	TP-TBP
11 ≤ Pn ≤ 37	2	TBS (*)	-	TP
11 ≤ Pn ≤ 55	4	TBS (*)	-	-
11 ≤ Pn ≤ 90	4	-	-	TP
7,5 ≤ Pn ≤ 22	6	TBS (*)	-	TP

(*) Series available on request.

3.2.3 Nominal power - [kW]

	63A	63B	63C	71A	71B	71C	80A			80B		
Poles	TS	TS	TS	TS	TS	TS	TS	TH	TP	TS	TH	TP
2	0,18	0,25	0,37	0,37	0,55	-	-	0,75	0,75	-	1,1	1,1
4	0,12	0,18	0,22	0,25	0,37	0,55	0,55	-	-	-	0,75	0,75
6	0,09	0,12	0,15	0,18	0,25	0,37	0,37	-	-	0,55	-	-

	90S		90L		100LR	100L	100LA		112MR	112MS	112MA	112M
Poles	TH	TP	TH	TP	TP	TP	TH	TP	TP	TP	TH	TP
2	1,5	1,5	2,2	2,2	-	3	3	-	-	-	4	4
4	1,1	1,1	1,5	1,5	-	-	2,2	2,2	2,2	3	4	4
6	-	0,75	0,75	-	1,1	1,5	1,1	-	-	-	2,2	2,2

	112MR	112MS	132S	132SA	132MS	132SB	132M	132MA		132MB	
Poles	TP	TP	TP	TH	TP	TH	TP	TH	TP	TH	TP
2	-	-	5,5	5,5	-	7,5	7,5	9,2	-	-	-
4	2,2	3	-	5,5	5,5	-	7,5	7,5	-	-	-
6	-	-	3	3	-	-	-	4	4	5,5	5,5

	160M	160MA	160MB	160L	160LA	180M	180L
Poles	TP	TP	TP	TP	TP	TP	TP
2	-	11	15	18,5	-	22	-
4	-	11	-	-	15	18,5	22
6	7,5	-	-	11	-	-	15

	200L	200LA	200LB	225S	225M	250M	280S	280M
Poles	TP	TP	TP	TP	TP	TP	TP	TP
2	-	30	37	-	-	-	-	-
4	30	-	-	37	45	55	75	90
6	-	18,5	22	-	-	-	-	-

3.3 WEIGHT

The values reported in the tables are referred to the weight of the gearbox with lubricant excluded.

* S-PS	063	071	080-090	100-112	132	160	180	200	225	
052-053	16	16,4	17	21,2	/	/	/	/	/	~ kg
062-063	/	19,9	20,6	24,9	/	/	/	/	/	
082-083	/	32,9	35	37	39,7	/	/	/	/	
102-103	/	44	46	48	50,7	57,4	57,4	/	/	
122-123	/	/	82	84,2	87	93	93	108	/	

IS	~ kg
052-053	19,2
062-063	22,7
082-083	39
102-103	50
122-123	91,8

*Weight without motor

	TS									
CS	063	071	080	090S	090L	100	112	132S	132M	
052-053	19,5	20,4	25,1	29	31	36,5	48	/	/	~ kg
062-063	/	23,9	28,7	32,6	34,6	40,1	51,6	/	/	
082-083	/	36,5	41,6	44	45,5	50,6	62	76	87,6	
102-103	/	47,5	52,6	55	56,5	61,6	73	87	98,6	
122-123	/	/	/	91	92	98	108	123	132	

	TH							
CS	080	090S	090L	100	112	132S	132M	
052-053	26,8	31,3	33	38,8	51,1	/	/	~ kg
062-063	30,4	34,9	36,6	42,4	54,7	/	/	
082-083	43,3	46,3	47,5	52,9	65,1	81,3	94,4	
102-103	54,3	57,3	58,5	63,9	76,1	92,3	105,4	
122-123	/	93,3	94	100,3	111,1	128,3	138,8	

	TBS									
CS	063	071	080	090S	090L	100	112	132S	132M	
052-053	21	22,6	28,6	34,5	36,5	42	57,7	/	/	~ kg
062-063	/	26,2	32,2	38,1	40,1	45,6	61,3	/	/	
082-083	/	38,7	45	49,5	51	56	71,7	86,3	102,3	
102-103	/	49,7	56	60,5	62	67	82,7	97,3	113,3	
122-123	/	/	/	96,5	97,5	103,5	117,7	133,3	146,7	

	TBH							
CS	080	090S	090L	100	112	132S	132M	
052-053	30,3	36,8	38,5	45,7	60,8	/	/	~ kg
062-063	33,9	40,4	42,1	49,3	64,4	/	/	
082-083	46,7	51,8	53	59,7	74,8	91,6	108,8	
102-103	57,7	62,8	64	70,7	85,8	102,6	119,8	
122-123	/	98,8	99,5	104	120,8	138,6	153,2	

3.4 END SHAFT

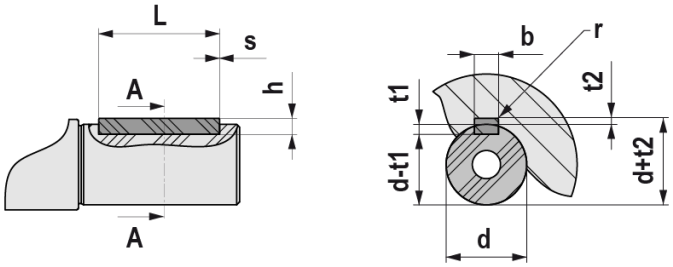

UNI 6604 - DIN 6885															
d			b x h			Tol. b / h	L		s min / max	b	t1	t2	Tol. t1 / t2	r max
	6	8	2	×	2	h9 / h9	6	20	0,16 0,25	2	1,2	1	0,1 0	0,08 0,16
>	8	10	3	×	3		6	36		3	1,8	1,4		
>	10	12	4	×	4		8	45		4	2,5	1,8		
>	12	17	5	×	5		10	56	0,25 0,4	5	3	2,3		0,16 0,25
>	17	22	6	×	6		14	70		6	3	2,8		
>	22	30	8	×	7	h9 / h11	18	90		8	4	3,3	0,2 0	
>	30	38	10	×	8		22	110	0,4 0,6	10	5	3,3		0,25 0,4
>	38	44	12	×	8		28	140		12	5	3,3		
>	44	50	14	×	9		36	160		14	5,5	3,8		
>	50	58	16	×	10		45	180		16	6	4,3		
>	58	65	18	×	11		50	200		18	7	4,4		
>	65	75	20	×	12		56	110	0,6 0,8	20	7,5	4,9		0,4 0,6
>	75	85	22	×	14		63	140		22	9	5,4		
>	85	95	25	×	14		70	160		25	9	5,4		
>	95	110	28	×	16		80	180		28	10	6,4		
>	110	130	32	×	18		90	200		32	11	7,4		
>	130	150	36	×	20		100	160	1 1,2	36	12	8,4	0,3 0	0,7 1
>	150	170	40	×	22		110	180		40	13	9,4		
>	170	200	45	×	25		125	200		45	14	10,4		

4.1 LOW SPEED SHAFTS

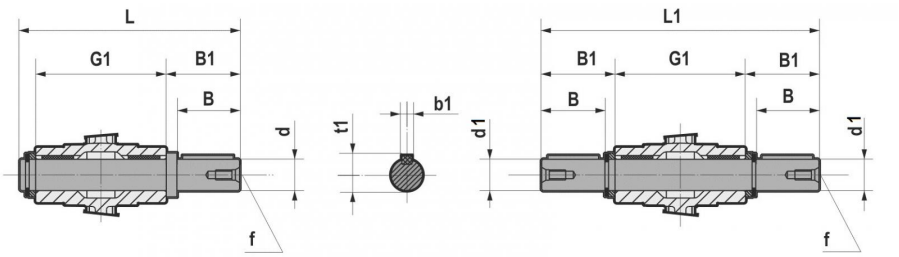

	d h6	B	B1	G1	L	f	b1	t1
S062/S063	35	58	62	140	210,5	M12	10	38
S082/S083	40	80	84,25	180	273	M16	12	43
S102/S103	50	100	105	210	325	M16	14	53,5
S122/S123	60	120	125	240	375	M20	18	64

4.2 OUTPUT FLANGE

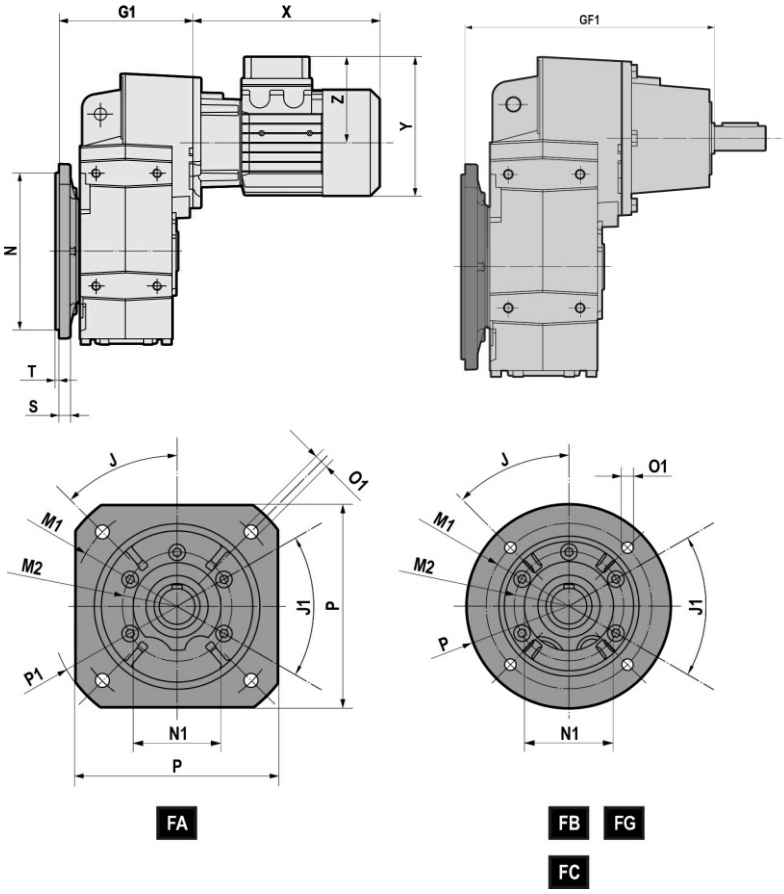

		J	J1	M1	M2	N f8	N1	O1	P	P1	S	T	G1	GF1
S052 S053	FA	45	45	215	105	180	90	14	200	250	12	4	153	243
	FB	45	45	165	105	130	90	11	200	/	12	3,5	153	243
S062 S063	FA	45	45	215	105	180	90	14	200	250	12	4	172,5	262,5
	FB	45	45	165	105	130	90	11	200	/	12	3,5	172,5	262,5
S082 S083	FA	45	45	265	130	230	110	14	250	300	15	4	227	340
	FB	45	45	215	130	180	110	14	250	/	15	4	227	340
	FC	45	45	165	130	130	110	11	200	/	15	3,5	227	340
S102 S103	FA	45	45	300	165	250	130	18	300	350	16	5	247,5	360,5
	FB	45	45	265	165	230	130	14	300	/	16	4	247,5	360,5
	FC	45	45	215	165	180	130	14	250	/	16	4	247,5	360,5
S122 S123	FA	45	45	350	185	300	150	18	350	400	18	5	287	413,5
	FB	45	45	300	185	250	150	18	350	/	18	5	287	413,5
	FC	45	45	265	185	230	150	14	300	/	18	4	287	413,5

4.3 SHAFT MOUNTING FASTENING

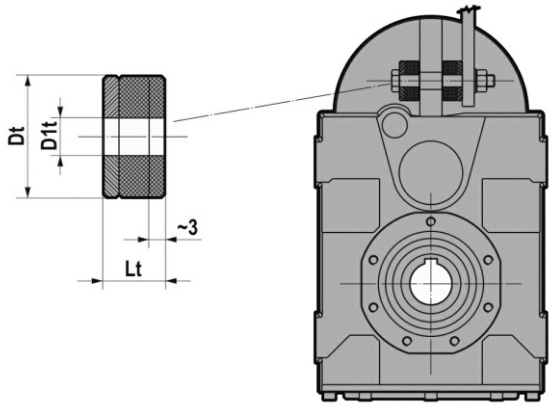

	Dt	D1t	Lt
S052/S053	40	12,5	20
S062/S063	40	12,5	20
S082/S083	40	12,5	20
S102/S103	60	21	30
S122/S123	60	21	30

4.4 BACKSTOP DEVICE

The gear reducer can be supplied with backstop device on input shaft. Backstop device allows output shaft rotation in only one sense of direction; according to the size, it is available in the input flange or in the motor with the same dimensions. It is important to specify the required sense of direction on the order. The backstop device is not available for mounting position V5 with motor size IEC 100...225.

Certified accessory for ATEX 3G/3D, only.

SENSE OF DIRECTION AVAILABLE

S... 2/C-D-L

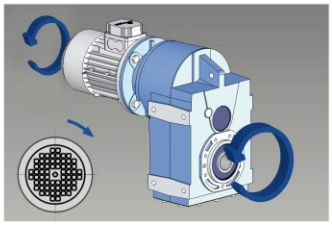

CLOCKWISE SENSE OF DIRECTION
REFERRED TO HIGH SPEED SHAFT

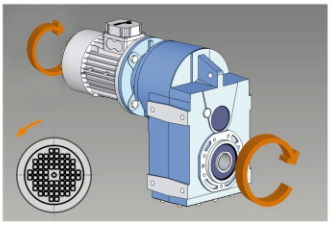

COUNTER CLOCKWISE SENSE OF DIRECTION
REFERRED TO HIGH SPEED SHAFT

S... 3/C-D-L

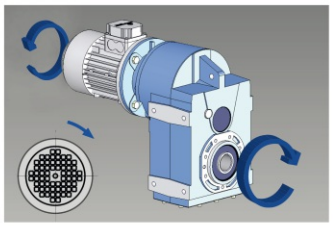

CLOCKWISE SENSE OF DIRECTION
REFERRED TO HIGH SPEED SHAFT

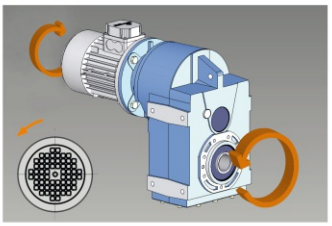

COUNTER CLOCKWISE SENSE OF DIRECTION
REFERRED TO HIGH SPEED SHAFT

	063	071	080	090	100-112	132	160	180	200
	140x11	160x14	200x19	200x24	250x28	300x38	350x42	350x48	400x55
S052		B5	B5	B5	B5				
S053	B5	B5	B5	B5					
S062		B5	B5	B5	B5				
S063		B5	B5	B5					
S082			B5	B5	B5	B5			
S083		B5	B5	B5	B5				
S102			B5	B5	B5	B5	B5		
S103		B5	B5	B5	B5				
S122			B5	B5	B5	B5	B5	B5	B5
S123			B5	B5	B5	B5			

4.5 OUTPUT SHAFT WITH SHRINK DISC

Clean and degrease the surfaces of the shaft to be fitted to. Comply with the indicated tightening torque of screws (M_T).
The shrink disc is designed only to transmit the output torque.
In case of radial and/or axial loads or V5-V6 mountig positions, please contact the technical support.

Certified accessory for ATEX 3G/3D, only.

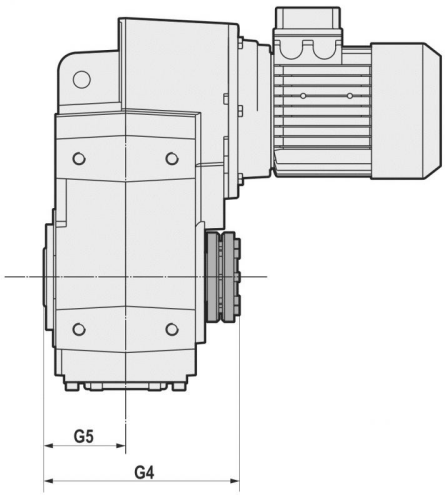

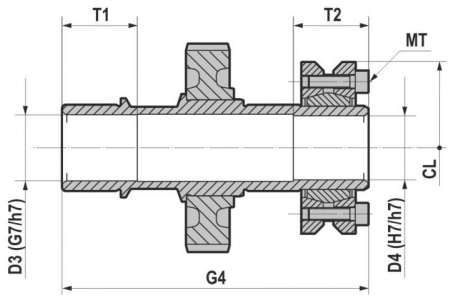

	D3	D4	G4	G5	T1	T2	CL	MT 12.9 [Nm]
S052/S053	31	30	152	60	35	35	74	15
S062/S063	36	35	173	70	40	35	80	15
S082/S083	41	40	217	90	50	40	100	15
S102/S103	51	50	248	105	55	40	115	15
S122/S123	61	60	282	120	60	50	145	40

4.6 REINFORCED OIL SEALS FOR OUTPUT SHAFT

The reinforced seal can be done through the standard oil seal with VRM ring.
On request the gear reducer can be supplied with fluoroelastomer FPM (FKM) seals.

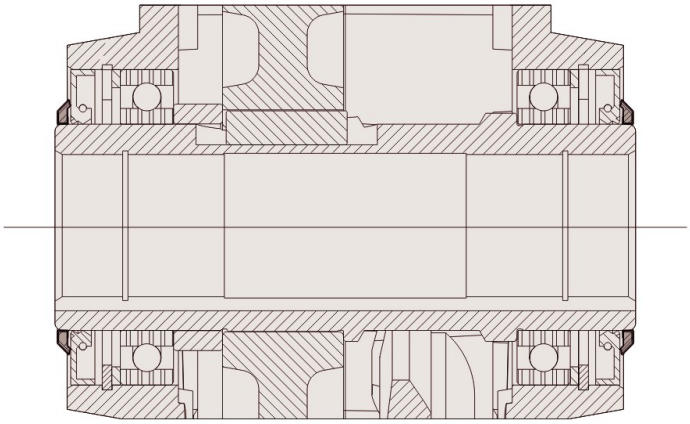

4.7 ASSEMBLING/DISASSEMBLING KIT

Mounting/dismounting kit for hollow shaft gear reducers with keyway. On request delivery includes:

1. Retaining bolt
2. Circlip
3. Fixed nut
4. Forcing washer

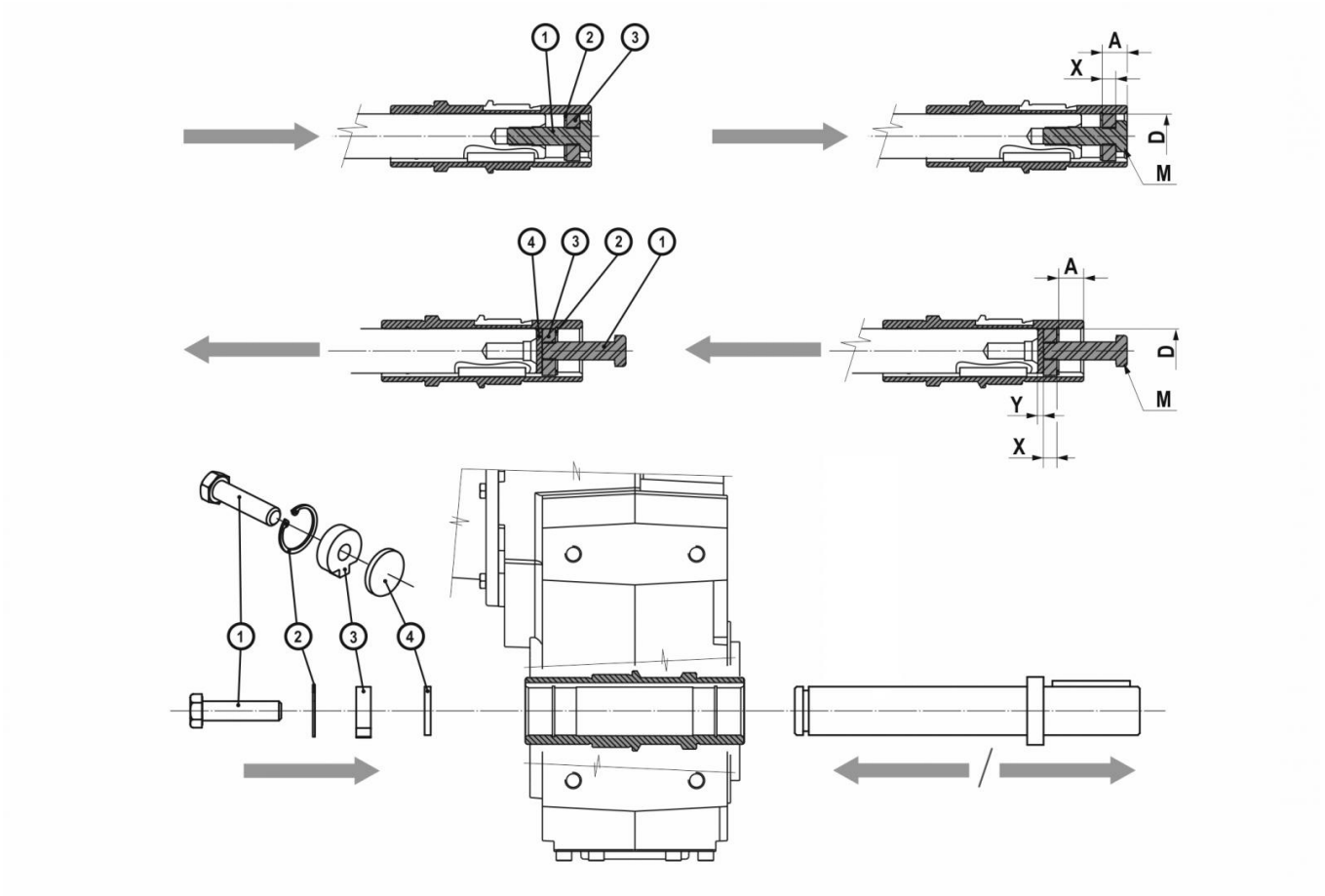

	D	A	X	Y	M
S052/S053	30	13,8	10	5	M10x35
S062/S063	35	12	12	5	M16x50
S082/S083	40	22,25	12	5	M16x50
	45				
S102/S103	50	25	12	5	M16x50
S122/S123	60	28	16	5	M20x70

5.1 S GEARED MOTORS (50Hz)

If “Ex” mark is present, contact MOTOVARIO TECHNICAL SERVICE.

0.09 kW

n2 [rpm]	M2 [Nm]	fs	i	Gear reducer	Motor	Fr2 D [N]	Fr2 C-L [N]
7.3	111	2.7	117.48	S053	63A6	6000	6000
6.3	130	2.3	137.45	S053	63A6	6000	6000
4.8	168	1.8	177.55	S053	63A6	6000	6000
4.3	188	1.6	198.45	S053	63A6	6000	6000
4.0	207	1.4	217.64	S053	63A6	6000	6000
3.4	243	1.2	256.33	S053	63A6	6000	6000

0.12 kW

n2 [rpm]	M2 [Nm]	fs	i	Gear reducer	Motor	Fr2 D [N]	Fr2 C-L [N]
11.6	94	3.2	74.20	S053	63B6	6000	6000
11.4	94	3.1	117.48	S053	63A4	6000	6000
9.7	111	2.7	137.45	S053	63A4	6000	6000
9.0	121	2.5	95.84	S053	63B6	6000	6000
7.5	143	2.1	177.55	S053	63A4	6000	6000
7.3	149	2.0	117.48	S053	63B6	6000	6000
6.8	160	1.9	198.45	S053	63A4	6000	6000
6.3	174	1.7	137.45	S053	63B6	6000	6000
6.2	175	1.7	217.64	S053	63A4	6000	6000
5.2	206	1.4	256.33	S053	63A4	6000	6000
4.8	225	1.3	177.55	S053	63B6	6000	6000
4.3	251	1.2	198.45	S053	63B6	6000	6000
4.3	253	1.2	314.21	S053	63A4	6000	6000
4.0	275	1.1	217.64	S053	63B6	6000	6000

0.15 kW

n2 [rpm]	M2 [Nm]	fs	i	Gear reducer	Motor	Fr2 D [N]	Fr2 C-L [N]
10.9	125	2.4	74.20	S053	63C6	6000	6000
8.5	161	1.9	95.84	S053	63C6	6000	6000
6.9	197	1.5	117.48	S053	63C6	6000	6000
5.9	231	1.3	137.45	S053	63C6	6000	6000
4.6	298	1.0	177.55	S053	63C6	6000	6000

0.18 kW

n2 [rpm]	M2 [Nm]	fs	i	Gear reducer	Motor	Fr2 D [N]	Fr2 C-L [N]
20.4	77	Ex	137.45	S053	63A2	6000	6000
17.9	90	3.3	74.20	S053	63B4	6000	6000
17.2	97	3.1	52.25	S052	71A6	6000	6000

5.1 S GEARED MOTORS (50Hz)

0.18 kW

n2 [rpm]	M2 [Nm]	fs	i	Gear reducer	Motor	Fr2 D [N]	Fr2 C-L [N]
15.8	99	Ex	177.55	S053	63A2	6000	6000
15.6	107	2.8	57.86	S052	71A6	6000	6000
14.1	111	Ex	198.45	S053	63A2	6000	6000
13.9	116	2.6	95.84	S053	63B4	6000	6000
12.9	121	Ex	217.64	S053	63A2	6000	6000
12.4	135	2.2	72.83	S052	71A6	6000	6000
12.1	135	2.2	74.20	S053	71A6	6000	6000
11.3	143	2.1	117.48	S053	63B4	6000	6000
10.9	143	Ex	256.33	S053	63A2	6000	6000
9.7	167	1.8	137.45	S053	63B4	6000	6000
9.4	174	1.7	95.84	S053	71A6	6000	6000
9.0	181	2.8	99.89	S063	71A6	10000	4000
8.9	175	Ex	314.21	S053	63A2	6000	6000
7.7	213	1.4	117.48	S053	71A6	6000	6000
7.5	216	1.4	177.55	S053	63B4	6000	6000
7.1	229	2.2	126.43	S063	71A6	10000	4000
6.7	241	1.3	198.45	S053	63B4	6000	6000
6.5	249	1.2	137.45	S053	71A6	6000	6000
6.1	264	1.1	217.64	S053	63B4	6000	6000
6.0	274	1.9	150.85	S063	71A6	10000	4000
5.7	288	3.0	158.76	S083	71A6	18000	7200
4.9	336	1.5	185.05	S063	71A6	10000	4000
4.9	335	2.5	184.88	S083	71A6	18000	7200
4.4	368	2.3	203.11	S083	71A6	18000	7200
4.1	395	1.3	217.79	S063	71A6	10000	4000
3.6	454	1.9	250.50	S083	71A6	18000	7200
3.4	484	1.1	267.16	S063	71A6	10000	4000
3.3	497	2.7	274.20	S103	71A6	22000	9000
3.1	530	1.6	292.36	S083	71A6	18000	7200
2.9	573	1.5	315.73	S083	71A6	18000	7200
2.8	582	2.4	320.79	S103	71A6	22000	9000
2.6	627	2.2	345.60	S103	71A6	22000	9000
2.5	654	1.3	360.58	S083	71A6	18000	7200
2.3	716	1.9	394.69	S103	71A6	22000	9000

0.22 kW

n2 [rpm]	M2 [Nm]	fs	i	Gear reducer	Motor	Fr2 D [N]	Fr2 C-L [N]
17.9	110	2.7	74.20	S053	63C4	6000	6000
13.9	142	2.1	95.84	S053	63C4	6000	6000
11.3	174	1.7	117.48	S053	63C4	6000	6000
9.7	204	1.5	137.45	S053	63C4	6000	6000
7.5	264	1.1	177.55	S053	63C4	6000	6000
6.7	295	1.0	198.45	S053	63C4	6000	6000

5.1 S GEARED MOTORS (50Hz)

0.25 kW

n2 [rpm]	M2 [Nm]	fs	i	Gear reducer	Motor	Fr2 D [N]	Fr2 C-L [N]
30.0	77	2.7	30.00	S052	71B6	6000	6000
29.2	74	Ex	95.84	S053	63B2	6000	6000
27.6	84	3.1	32.55	S052	71B6	6000	6000
24.6	94	3.0	36.55	S052	71B6	6000	6000
24.0	95	3.1	57.86	S052	71A4	6000	6000
23.8	91	Ex	117.48	S053	63B2	6000	6000
22.6	103	2.9	39.90	S052	71B6	6000	6000
21.1	110	2.7	42.63	S052	71B6	6000	6000
20.4	106	Ex	137.45	S053	63B2	6000	6000
19.1	121	2.5	47.20	S052	71B6	6000	6000
19.1	120	2.5	72.83	S052	71A4	6000	6000
18.7	120	2.5	74.20	S053	71A4	6000	6000
17.8	126	2.4	74.20	S053	63D4	6000	6000
17.2	134	2.2	52.25	S052	71B6	6000	6000
15.8	137	Ex	177.55	S053	63B2	6000	6000
15.6	149	2.0	57.86	S052	71B6	6000	6000
14.5	155	1.9	95.84	S053	71A4	6000	6000
14.1	153	Ex	198.45	S053	63B2	6000	6000
13.9	161	3.2	99.89	S063	71A4	10000	4000
13.8	163	1.8	95.84	S053	63D4	6000	6000
13.3	174	2.9	67.47	S062	71B6	10000	4000
12.9	168	Ex	217.64	S053	63B2	6000	6000
12.4	187	1.6	72.83	S052	71B6	6000	6000
12.1	187	1.6	74.20	S053	71B6	6000	6000
11.8	190	1.6	117.48	S053	71A4	6000	6000
11.2	200	1.5	117.48	S053	63D4	6000	6000
11.1	205	2.5	81.43	S063	71B6	10000	4000
11.0	204	2.5	126.43	S063	71A4	10000	4000
10.9	198	Ex	256.33	S053	63B2	6000	6000
10.1	222	1.4	137.45	S053	71A4	6000	6000
9.6	234	1.3	137.45	S053	63D4	6000	6000
9.4	241	1.2	95.84	S053	71B6	6000	6000
9.2	244	2.1	150.85	S063	71A4	10000	4000
9.0	252	2.0	99.89	S063	71B6	10000	4000
8.8	256	3.3	158.76	S083	71A4	18000	7200
7.8	287	1.0	177.55	S053	71A4	6000	6000
7.7	296	1.0	117.48	S053	71B6	6000	6000
7.7	295	2.9	117.17	S083	71B6	18000	7200
7.5	299	1.7	185.05	S063	71A4	10000	4000
7.5	299	2.8	184.88	S083	71A4	18000	7200
7.1	318	1.6	126.43	S063	71B6	10000	4000
7.0	324	2.6	128.73	S083	71B6	18000	7200
6.8	328	2.6	203.11	S083	71A4	18000	7200
6.4	352	1.5	217.79	S063	71A4	10000	4000
6.0	380	1.3	150.85	S063	71B6	10000	4000

5.1 S GEARED MOTORS (50Hz)

0.25 kW

n2 [rpm]	M2 [Nm]	fs	i	Gear reducer	Motor	Fr2 D [N]	Fr2 C-L [N]
5.7	400	2.1	158.76	S083	71B6	18000	7200
5.5	404	2.1	250.50	S083	71A4	18000	7200
5.2	431	1.2	267.16	S063	71A4	10000	4000
5.2	438	3.1	173.78	S103	71B6	22000	9000
5.1	443	3.1	274.20	S103	71A4	22000	9000
4.9	466	1.1	185.05	S063	71B6	10000	4000
4.9	466	1.8	184.88	S083	71B6	18000	7200
4.8	472	1.8	292.36	S083	71A4	18000	7200
4.4	512	1.7	203.11	S083	71B6	18000	7200
4.4	510	1.7	315.73	S083	71A4	18000	7200
4.4	512	2.7	203.11	S103	71B6	22000	9000
4.3	518	2.6	320.79	S103	71A4	22000	9000
4.0	561	2.4	222.85	S103	71B6	22000	9000
4.0	558	2.4	345.60	S103	71A4	22000	9000
3.9	582	1.5	360.58	S083	71A4	18000	7200
3.6	631	1.3	250.50	S083	71B6	18000	7200
3.5	637	2.1	394.69	S103	71A4	22000	9000
3.3	691	2.0	274.20	S103	71B6	22000	9000
3.1	736	1.1	292.36	S083	71B6	18000	7200
2.9	795	1.1	315.73	S083	71B6	18000	7200
2.8	808	1.7	320.79	S103	71B6	22000	9000
2.6	870	1.6	345.60	S103	71B6	22000	9000
2.3	994	1.4	394.69	S103	71B6	22000	9000

0.37 kW

n2 [rpm]	M2 [Nm]	fs	i	Gear reducer	Motor	Fr2 D [N]	Fr2 C-L [N]
54.0	63	2.7	16.29	S052	71C6	5904	5904
50.5	68	2.6	18.63	S052	80A6	6000	6000
48.7	67	Ex	57.86	S052	71A2	6000	6000
47.2	73	2.4	18.63	S052	71C6	6000	6000
46.0	74	2.8	30.00	S052	71B4	6000	6000
44.7	77	2.5	21.04	S052	80A6	6000	6000
42.4	80	3.2	32.55	S052	71B4	6000	6000
41.8	82	2.3	21.04	S052	71C6	6000	6000
39.1	88	2.1	24.07	S052	80A6	6000	6000
38.7	85	Ex	72.83	S052	71A2	6000	6000
38.0	84	Ex	74.20	S053	71A2	6000	6000
37.8	90	3.1	36.55	S052	71B4	6000	6000
37.6	85	Ex	74.20	S053	63C2	6000	6000
36.6	94	2.0	24.07	S052	71C6	6000	6000
36.5	94	2.2	25.79	S052	80A6	6000	6000
34.6	98	3.0	39.90	S052	71B4	6000	6000
34.1	100	2.1	25.79	S052	71C6	6000	6000

5.1 S GEARED MOTORS (50Hz)

0.37 kW

n2 [rpm]	M2 [Nm]	fs	i	Gear reducer	Motor	Fr2 D [N]	Fr2 C-L [N]
33.8	101	2.1	27.81	S052	80A6	6000	6000
32.4	105	2.8	42.63	S052	71B4	6000	6000
31.6	108	1.9	27.81	S052	71C6	6000	6000
31.3	109	1.9	30.00	S052	80A6	6000	6000
29.4	109	Ex	95.84	S053	71A2	6000	6000
29.3	117	1.8	30.00	S052	71C6	6000	6000
29.2	116	2.6	47.20	S052	71B4	6000	6000
29.1	110	Ex	95.84	S053	63C2	6000	6000
28.9	119	2.2	32.55	S052	80A6	6000	6000
28.2	114	Ex	99.89	S063	71A2	10000	4000
27.0	127	2.0	32.55	S052	71C6	6000	6000
26.4	128	2.3	52.25	S052	71B4	6000	6000
25.7	133	2.1	36.55	S052	80A6	6000	6000
24.1	142	2.0	36.55	S052	71C6	6000	6000
24.0	134	Ex	117.48	S053	71A2	6000	6000
23.8	142	2.1	57.86	S052	71B4	6000	6000
23.7	135	Ex	117.48	S053	63C2	6000	6000
23.6	145	2.0	39.90	S052	80A6	6000	6000
22.3	144	Ex	126.43	S063	71A2	10000	4000
22.1	155	1.9	39.90	S052	71C6	6000	6000
22.1	155	1.9	42.63	S052	80A6	6000	6000
21.5	159	3.2	43.64	S062	80A6	10000	4000
20.6	166	1.8	42.63	S052	71C6	6000	6000
20.5	156	Ex	137.45	S053	71A2	6000	6000
20.5	166	3.1	67.47	S062	71B4	10000	4000
20.4	168	3.0	46.10	S062	80A6	10000	4000
20.3	158	Ex	137.45	S053	63C2	6000	6000
20.2	170	3.0	43.64	S062	71C6	10000	4000
19.9	172	1.7	47.20	S052	80A6	6000	6000
19.1	179	2.8	46.10	S062	71C6	10000	4000
18.9	179	1.7	72.83	S052	71B4	6000	6000
18.7	171	Ex	150.85	S063	71A2	10000	4000
18.6	184	1.6	47.20	S052	71C6	6000	6000
18.6	179	1.7	74.20	S053	71B4	6000	6000
18.0	190	1.6	52.25	S052	80A6	6000	6000
17.6	195	2.6	53.53	S062	80A6	10000	4000
17.1	200	2.5	55.00	S062	80A6	10000	4000
16.9	196	2.6	81.43	S063	71B4	10000	4000
16.8	203	1.5	52.25	S052	71C6	6000	6000
16.4	208	2.4	53.53	S062	71C6	10000	4000
16.2	211	1.4	57.86	S052	80A6	6000	6000
16.0	214	2.4	55.00	S062	71C6	10000	4000
15.9	202	Ex	177.55	S053	71A2	6000	6000
15.7	204	Ex	177.55	S053	63C2	6000	6000
15.3	210	Ex	184.88	S083	71A2	18000	7200

5.1 S GEARED MOTORS (50Hz)

0.37 kW

n2 [rpm]	M2 [Nm]	fs	i	Gear reducer	Motor	Fr2 D [N]	Fr2 C-L [N]
15.2	225	1.3	57.86	S052	71C6	6000	6000
15.2	210	Ex	185.05	S063	71A2	10000	4000
14.4	231	1.3	95.84	S053	71B4	6000	6000
14.2	226	Ex	198.45	S053	71A2	6000	6000
14.1	228	Ex	198.45	S053	63C2	6000	6000
13.9	246	2.1	67.47	S062	80A6	10000	4000
13.9	231	Ex	203.11	S083	71A2	18000	7200
13.8	240	2.1	99.89	S063	71B4	10000	4000
13.0	263	1.9	67.47	S062	71C6	10000	4000
12.9	265	1.1	72.83	S052	80A6	6000	6000
12.9	248	Ex	217.79	S063	71A2	10000	4000
12.7	265	1.1	74.20	S053	80A6	6000	6000
12.7	265	3.2	74.18	S083	80A6	18000	7200
12.1	284	1.1	72.83	S052	71C6	6000	6000
11.9	283	1.1	74.20	S053	71C6	6000	6000
11.8	282	3.0	117.17	S083	71B4	18000	7200
11.7	283	1.0	117.48	S053	71B4	6000	6000
11.5	291	1.8	81.43	S063	80A6	10000	4000
11.3	285	Ex	250.50	S083	71A2	18000	7200
10.9	304	1.7	126.43	S063	71B4	10000	4000
10.8	310	1.6	81.43	S063	71C6	10000	4000
10.7	310	2.7	128.73	S083	71B4	18000	7200
10.6	304	Ex	267.16	S063	71A2	10000	4000
10.3	327	2.6	91.49	S083	80A6	18000	7200
9.6	332	Ex	292.36	S083	71A2	18000	7200
9.4	356	1.4	99.89	S063	80A6	10000	4000
9.1	363	1.4	150.85	S063	71B4	10000	4000
8.9	359	Ex	315.73	S083	71A2	18000	7200
8.8	381	1.3	99.89	S063	71C6	10000	4000
8.7	382	2.2	158.76	S083	71B4	18000	7200
8.0	418	2.0	117.17	S083	80A6	18000	7200
8.0	421	3.2	110.55	S103	71C6	22000	9000
7.9	418	3.3	173.78	S103	71B4	22000	9000
7.8	410	Ex	360.58	S083	71A2	18000	7200
7.5	445	1.2	185.05	S063	71B4	10000	4000
7.5	447	1.9	117.17	S083	71C6	18000	7200
7.5	445	1.9	184.88	S083	71B4	18000	7200
7.4	451	1.1	126.43	S063	80A6	10000	4000
7.3	459	1.9	128.73	S083	80A6	18000	7200
7.3	459	3.0	128.73	S103	80A6	22000	9000
7.0	482	1.1	126.43	S063	71C6	10000	4000
6.8	491	1.7	128.73	S083	71C6	18000	7200
6.8	489	1.7	203.11	S083	71B4	18000	7200
6.8	491	2.8	128.73	S103	71C6	22000	9000
6.8	489	2.8	203.11	S103	71B4	22000	9000

5.1 S GEARED MOTORS (50Hz)

0.37 kW

n2 [rpm]	M2 [Nm]	fs	i	Gear reducer	Motor	Fr2 D [N]	Fr2 C-L [N]
6.7	504	2.7	141.24	S103	80A6	22000	9000
6.2	538	2.5	141.24	S103	71C6	22000	9000
6.2	536	2.5	222.85	S103	71B4	22000	9000
5.9	567	1.5	158.76	S083	80A6	18000	7200
5.5	605	1.4	158.76	S083	71C6	18000	7200
5.5	603	1.4	250.50	S083	71B4	18000	7200
5.4	620	2.2	173.78	S103	80A6	22000	9000
5.1	660	1.3	184.88	S083	80A6	18000	7200
5.1	662	2.1	173.78	S103	71C6	22000	9000
5.0	660	2.1	274.20	S103	71B4	22000	9000
4.8	705	1.2	184.88	S083	71C6	18000	7200
4.7	704	1.2	292.36	S083	71B4	18000	7200
4.6	725	1.2	203.11	S083	80A6	18000	7200
4.6	725	1.9	203.11	S103	80A6	22000	9000
4.4	760	1.1	315.73	S083	71B4	18000	7200
4.3	774	1.1	203.11	S083	71C6	18000	7200
4.3	774	1.8	203.11	S103	71C6	22000	9000
4.3	772	1.8	320.79	S103	71B4	22000	9000
4.2	795	1.7	222.85	S103	80A6	22000	9000
4.0	832	1.6	345.60	S103	71B4	22000	9000
3.9	850	1.6	222.85	S103	71C6	22000	9000
3.9	853	3.0	238.93	S123	80A6	30000	11200
3.5	950	1.4	394.69	S103	71B4	22000	9000
3.4	979	1.4	274.20	S103	80A6	22000	9000
3.4	1000	2.6	280.10	S123	80A6	30000	11200
3.2	1045	1.3	274.20	S103	71C6	22000	9000
3.1	1075	2.4	301.16	S123	80A6	30000	11200
2.9	1145	1.2	320.79	S103	80A6	22000	9000
2.7	1223	1.1	320.79	S103	71C6	22000	9000
2.7	1233	1.1	345.60	S103	80A6	22000	9000
2.7	1227	2.1	343.93	S123	80A6	30000	11200
2.5	1317	1.0	345.60	S103	71C6	22000	9000

0.55 kW

n2 [rpm]	M2 [Nm]	fs	i	Gear reducer	Motor	Fr2 D [N]	Fr2 C-L [N]
107.8	47	2.6	8.63	S052	80B6	4719	4719
86.3	56	Ex	32.55	S052	71B2	5046	5046
83.5	61	2.2	11.14	S052	80B6	5079	5079
76.9	63	Ex	36.55	S052	71B2	5215	5215
75.1	67	2.6	18.63	S052	80A4	5236	5236
73.5	69	2.5	18.63	S052	71C4	5267	5267
70.4	69	Ex	39.90	S052	71B2	5346	5346
68.1	75	2.0	13.66	S052	80B6	5377	5377

5.1 S GEARED MOTORS (50Hz)

0.55 kW

n2 [rpm]	M2 [Nm]	fs	i	Gear reducer	Motor	Fr2 D [N]	Fr2 C-L [N]
66.6	76	2.5	21.04	S052	80A4	5415	5415
65.9	74	Ex	42.63	S052	71B2	5445	5445
65.1	77	2.4	21.04	S052	71C4	5448	5448
60.9	84	2.1	15.27	S052	80B6	5544	5544
59.5	82	Ex	47.20	S052	71B2	5600	5600
58.2	87	2.2	24.07	S052	80A4	5618	5618
57.1	89	2.0	16.29	S052	80B6	5641	5641
56.9	89	2.1	24.07	S052	71C4	5651	5651
54.3	93	2.2	25.79	S052	80A4	5723	5723
53.8	90	Ex	52.25	S052	71B2	5756	5756
53.1	95	2.2	25.79	S052	71C4	5756	5756
50.3	100	2.1	27.81	S052	80A4	5838	5838
49.9	102	1.7	18.63	S052	80B6	5846	5846
49.3	102	2.0	27.81	S052	71C4	5872	5872
48.6	100	Ex	57.86	S052	71B2	5915	5915
46.7	108	1.9	30.00	S052	80A4	5955	5955
45.7	110	1.9	30.00	S052	71C4	5989	5989
44.2	115	1.6	21.04	S052	80B6	6000	6000
43.0	117	2.2	32.55	S052	80A4	6000	6000
42.1	120	2.1	32.55	S052	71C4	6000	6000
41.7	117	Ex	67.47	S062	71B2	10000	4000
40.1	127	2.7	23.18	S062	80B6	10000	4000
38.6	132	1.4	24.07	S052	80B6	6000	6000
38.6	126	Ex	72.83	S052	71B2	6000	6000
38.3	132	2.1	36.55	S052	80A4	6000	6000
37.9	126	Ex	74.20	S053	71B2	6000	6000
37.5	135	2.1	36.55	S052	71C4	6000	6000
37.0	138	2.5	25.14	S062	80B6	10000	4000
36.1	141	1.5	25.79	S052	80B6	6000	6000
35.1	144	2.1	39.90	S052	80A4	6000	6000
34.5	138	Ex	81.43	S063	71B2	10000	4000
34.3	147	2.0	39.90	S052	71C4	6000	6000
33.6	151	2.3	27.66	S062	80B6	10000	4000
33.4	152	1.4	27.81	S052	80B6	6000	6000
32.8	154	1.9	42.63	S052	80A4	6000	6000
32.1	157	1.9	42.63	S052	71C4	6000	6000
32.1	157	3.2	43.64	S062	80A4	10000	4000
31.4	161	3.2	43.64	S062	71C4	10000	4000
31.0	164	1.3	30.00	S052	80B6	6000	6000
31.0	164	2.2	30.00	S062	80B6	10000	4000
30.4	166	3.1	46.10	S062	80A4	10000	4000
29.7	170	1.8	47.20	S052	80A4	6000	6000
29.7	170	3.0	46.10	S062	71C4	10000	4000
29.3	163	Ex	95.84	S053	71B2	6000	6000
29.0	174	1.7	47.20	S052	71C4	6000	6000

5.1 S GEARED MOTORS (50Hz)

0.55 kW

n2 [rpm]	M2 [Nm]	fs	i	Gear reducer	Motor	Fr2 D [N]	Fr2 C-L [N]
28.6	178	1.4	32.55	S052	80B6	6000	6000
28.1	169	Ex	99.89	S063	71B2	10000	4000
26.8	188	1.6	52.25	S052	80A4	6000	6000
26.2	192	1.5	52.25	S052	71C4	6000	6000
26.2	193	2.6	53.53	S062	80A4	10000	4000
25.6	197	2.6	53.53	S062	71C4	10000	4000
25.5	198	2.6	55.00	S062	80A4	10000	4000
25.4	200	1.4	36.55	S052	80B6	6000	6000
25.4	200	2.5	36.57	S062	80B6	10000	4000
24.9	202	2.5	55.00	S062	71C4	10000	4000
24.2	208	1.4	57.86	S052	80A4	6000	6000
24.0	199	Ex	117.17	S083	71B2	18000	7200
23.9	199	Ex	117.48	S053	71B2	6000	6000
23.7	213	1.4	57.86	S052	71C4	6000	6000
23.6	216	2.4	39.38	S062	80B6	10000	4000
23.3	218	1.4	39.90	S052	80B6	6000	6000
22.2	214	Ex	126.43	S063	71B2	10000	4000
21.8	233	1.3	42.63	S052	80B6	6000	6000
21.8	218	Ex	128.73	S083	71B2	18000	7200
21.3	239	2.1	43.64	S062	80B6	10000	4000
20.8	243	2.1	67.47	S062	80A4	10000	4000
20.4	233	Ex	137.45	S053	71B2	6000	6000
20.3	248	2.1	67.47	S062	71C4	10000	4000
20.2	252	2.0	46.10	S062	80B6	10000	4000
19.7	258	1.2	47.20	S052	80B6	6000	6000
19.2	262	1.1	72.83	S052	80A4	6000	6000
18.9	262	1.1	74.20	S053	80A4	6000	6000
18.9	262	3.2	74.18	S083	80A4	18000	7200
18.8	268	1.1	72.83	S052	71C4	6000	6000
18.6	256	Ex	150.85	S063	71B2	10000	4000
18.5	267	1.1	74.20	S053	71C4	6000	6000
18.5	275	3.1	50.25	S082	80B6	18000	7200
17.8	286	1.0	52.25	S052	80B6	6000	6000
17.7	269	Ex	158.76	S083	71B2	18000	7200
17.4	293	1.7	53.53	S062	80B6	10000	4000
17.2	287	1.8	81.43	S063	80A4	10000	4000
17.1	297	2.9	54.27	S082	80B6	18000	7200
16.9	301	1.7	55.00	S062	80B6	10000	4000
16.8	293	1.7	81.43	S063	71C4	10000	4000
15.3	323	2.6	91.49	S083	80A4	18000	7200
15.2	314	Ex	185.05	S063	71B2	10000	4000
15.2	313	Ex	184.88	S083	71B2	18000	7200
15.0	339	2.5	61.98	S082	80B6	18000	7200
14.0	352	1.4	99.89	S063	80A4	10000	4000
13.8	369	1.4	67.47	S062	80B6	10000	4000

5.1 S GEARED MOTORS (50Hz)

0.55 kW

n2 [rpm]	M2 [Nm]	fs	i	Gear reducer	Motor	Fr2 D [N]	Fr2 C-L [N]
13.8	362	2.3	67.52	S083	80B6	18000	7200
13.8	344	Ex	203.11	S083	71B2	18000	7200
13.7	360	1.4	99.89	S063	71C4	10000	4000
12.9	369	Ex	217.79	S063	71B2	10000	4000
12.5	398	2.1	74.18	S083	80B6	18000	7200
11.9	413	2.1	117.17	S083	80A4	18000	7200
11.7	422	2.0	117.17	S083	71C4	18000	7200
11.4	437	1.2	81.43	S063	80B6	10000	4000
11.4	436	3.1	81.39	S103	80B6	22000	9000
11.2	425	Ex	250.50	S083	71B2	18000	7200
11.1	446	1.1	126.43	S063	80A4	10000	4000
10.9	454	1.9	128.73	S083	80A4	18000	7200
10.9	454	3.0	128.73	S103	80A4	22000	9000
10.8	456	1.1	126.43	S063	71C4	10000	4000
10.6	464	1.8	128.73	S083	71C4	18000	7200
10.6	464	2.9	128.73	S103	71C4	22000	9000
10.2	491	1.7	91.49	S083	80B6	18000	7200
9.9	498	2.7	141.24	S103	80A4	22000	9000
9.7	509	2.7	141.24	S103	71C4	22000	9000
9.6	496	Ex	292.36	S083	71B2	18000	7200
9.3	537	2.5	100.15	S103	80B6	22000	9000
8.9	535	Ex	315.73	S083	71B2	18000	7200
8.8	560	1.5	158.76	S083	80A4	18000	7200
8.6	572	1.5	158.76	S083	71C4	18000	7200
8.4	593	2.3	110.55	S103	80B6	22000	9000
8.1	613	2.2	173.78	S103	80A4	22000	9000
7.9	628	1.4	117.17	S083	80B6	18000	7200
7.9	626	2.2	173.78	S103	71C4	22000	9000
7.8	611	Ex	360.58	S083	71B2	18000	7200
7.6	652	1.3	184.88	S083	80A4	18000	7200
7.4	666	1.3	184.88	S083	71C4	18000	7200
7.2	690	1.2	128.73	S083	80B6	18000	7200
7.2	690	2.0	128.73	S103	80B6	22000	9000
6.9	716	1.2	203.11	S083	80A4	18000	7200
6.9	716	1.9	203.11	S103	80A4	22000	9000
6.7	732	1.2	203.11	S083	71C4	18000	7200
6.7	732	1.9	203.11	S103	71C4	22000	9000
6.6	757	1.8	141.24	S103	80B6	22000	9000
6.3	786	1.7	222.85	S103	80A4	22000	9000
6.1	803	1.7	222.85	S103	71C4	22000	9000
6.1	812	3.2	151.43	S123	80B6	30000	11200
5.9	843	3.0	238.93	S123	80A4	30000	11200
5.4	932	1.5	173.78	S103	80B6	22000	9000
5.2	952	2.7	177.53	S123	80B6	30000	11200
5.1	967	1.4	274.20	S103	80A4	22000	9000

5.1 S GEARED MOTORS (50Hz)

0.55 kW

n2 [rpm]	M2 [Nm]	fs	i	Gear reducer	Motor	Fr2 D [N]	Fr2 C-L [N]
5.0	988	1.4	274.20	S103	71C4	22000	9000
5.0	988	2.6	280.10	S123	80A4	30000	11200
4.8	1043	2.4	194.59	S123	80B6	30000	11200
4.6	1089	1.3	203.11	S103	80B6	22000	9000
4.6	1062	2.4	301.16	S123	80A4	30000	11200
4.4	1131	1.2	320.79	S103	80A4	22000	9000
4.3	1156	1.2	320.79	S103	71C4	22000	9000
4.2	1195	1.1	222.85	S103	80B6	22000	9000
4.1	1219	1.1	345.60	S103	80A4	22000	9000
4.1	1213	2.1	343.93	S123	80A4	30000	11200
4.0	1246	1.1	345.60	S103	71C4	22000	9000
3.9	1281	2.0	238.93	S123	80B6	30000	11200
3.3	1502	1.7	280.10	S123	80B6	30000	11200
3.1	1615	1.6	301.16	S123	80B6	30000	11200
2.7	1844	1.4	343.93	S123	80B6	30000	11200

0.75 kW

n2 [rpm]	M2 [Nm]	fs	i	Gear reducer	Motor	Fr2 D [N]	Fr2 C-L [N]
133.6	50	Ex	21.04	S052	80A2	4364	4364
133.1	50	Ex	21.04	S052	71C2	4369	4369
125.7	55	2.5	11.14	S052	80B4	4430	4430
116.8	57	Ex	24.07	S052	80A2	4534	4534
116.3	57	Ex	24.07	S052	71C2	4538	4538
109.0	61	Ex	25.79	S052	80A2	4622	4622
108.6	61	Ex	25.79	S052	71C2	4627	4627
106.7	65	1.9	8.63	S052	80C6	4633	4633
106.7	65	1.9	8.63	S052	90S6	4633	4633
102.5	67	2.3	13.66	S052	80B4	4688	4688
101.0	66	Ex	27.81	S052	80A2	4720	4720
100.7	66	Ex	27.81	S052	71C2	4725	4725
93.7	71	Ex	30.00	S052	80A2	4819	4819
93.3	71	Ex	30.00	S052	71C2	4824	4824
91.7	75	2.3	15.27	S052	80B4	4833	4833
86.3	77	Ex	32.55	S052	80A2	4927	4927
86.0	80	2.2	16.29	S052	80B4	4916	4916
86.0	77	Ex	32.55	S052	71C2	4932	4932
82.6	84	1.6	11.14	S052	80C6	4964	4964
82.6	84	1.6	11.14	S052	90S6	4964	4964
76.9	86	Ex	36.55	S052	80A2	5082	5082
76.6	87	Ex	36.55	S052	71C2	5086	5086
75.1	92	1.9	18.63	S052	80B4	5094	5094
70.4	94	Ex	39.90	S052	80A2	5200	5200
70.2	95	Ex	39.90	S052	71C2	5205	5205

5.1 S GEARED MOTORS (50Hz)

0.75 kW

n2 [rpm]	M2 [Nm]	fs	i	Gear reducer	Motor	Fr2 D [N]	Fr2 C-L [N]
67.4	103	1.5	13.66	S052	80C6	5233	5233
67.4	103	1.5	13.66	S052	90S6	5233	5233
66.6	103	1.8	21.04	S052	80B4	5255	5255
65.9	101	Ex	42.63	S052	80A2	5289	5289
65.7	101	Ex	42.63	S052	71C2	5294	5294
60.2	115	1.5	15.27	S052	80C6	5381	5381
60.2	115	1.5	15.27	S052	90S6	5381	5381
59.5	111	Ex	47.20	S052	80A2	5427	5427
59.3	112	Ex	47.20	S052	71C2	5432	5432
58.2	118	1.6	24.07	S052	80B4	5435	5435
57.7	120	2.7	15.94	S062	80C6	9788	3915
57.7	120	2.7	15.94	S062	90S6	9788	3915
56.5	123	1.4	16.29	S052	80C6	5467	5467
56.5	123	1.4	16.29	S052	90S6	5467	5467
55.7	123	2.8	25.14	S062	80B4	9895	3958
54.3	127	1.6	25.79	S052	80B4	5527	5527
53.8	123	Ex	52.25	S052	80A2	5565	5565
53.6	124	Ex	52.25	S052	71C2	5570	5570
52.5	126	Ex	53.53	S062	80A2	10000	4000
52.3	127	Ex	53.53	S062	71C2	10000	4000
51.1	130	Ex	55.00	S062	80A2	10000	4000
50.9	130	Ex	55.00	S062	71C2	10000	4000
50.6	136	2.5	27.66	S062	80B4	10000	4000
50.3	137	1.5	27.81	S052	80B4	5627	5627
49.4	141	1.2	18.63	S052	80C6	5644	5644
49.4	141	1.2	18.63	S052	90S6	5644	5644
48.6	137	Ex	57.86	S052	80A2	5703	5703
48.4	137	Ex	57.86	S052	71C2	5708	5708
47.1	148	2.2	19.55	S062	80C6	10000	4000
47.1	148	2.2	19.55	S062	90S6	10000	4000
46.7	147	1.4	30.00	S052	80B4	5727	5727
46.7	147	2.4	30.00	S062	80B4	10000	4000
43.7	159	1.2	21.04	S052	80C6	5803	5803
43.7	159	1.2	21.04	S052	90S6	5803	5803
43.0	160	1.6	32.55	S052	80B4	5834	5834
41.7	159	Ex	67.47	S062	80A2	10000	4000
41.5	160	Ex	67.47	S062	71C2	10000	4000
39.7	175	1.9	23.18	S062	80C6	10000	4000
39.7	175	1.9	23.18	S062	90S6	10000	4000
38.6	172	Ex	72.83	S052	80A2	6000	6000
38.4	173	Ex	72.83	S052	71C2	6000	6000
38.3	179	1.6	36.55	S052	80B4	5983	5983
38.3	180	2.8	36.57	S062	80B4	10000	4000
38.2	182	1.0	24.07	S052	80C6	5976	5976
38.2	182	1.0	24.07	S052	90S6	5976	5976

5.1 S GEARED MOTORS (50Hz)

0.75 kW

n2 [rpm]	M2 [Nm]	fs	i	Gear reducer	Motor	Fr2 D [N]	Fr2 C-L [N]
37.9	172	Ex	74.20	S053	80A2	6000	6000
37.7	172	Ex	74.20	S053	71C2	6000	6000
36.6	190	1.8	25.14	S062	80C6	10000	4000
36.6	190	1.8	25.14	S062	90S6	10000	4000
35.7	195	1.1	25.79	S052	80C6	6000	6000
35.7	195	1.1	25.79	S052	90S6	6000	6000
35.6	193	2.6	39.38	S062	80B4	10000	4000
35.1	196	1.5	39.90	S052	80B4	6000	6000
34.5	188	Ex	81.43	S063	80A2	10000	4000
34.4	189	Ex	81.43	S063	71C2	10000	4000
33.8	205	1.0	27.81	S052	90S6	6000	6000
33.3	209	1.7	27.66	S062	80C6	10000	4000
33.3	209	1.7	27.66	S062	90S6	10000	4000
32.8	209	1.4	42.63	S052	80B4	6000	6000
32.1	214	2.4	43.64	S062	80B4	10000	4000
30.7	226	1.6	30.00	S062	80C6	10000	4000
30.7	226	1.6	30.00	S062	90S6	10000	4000
30.7	212	Ex	91.49	S083	80A2	18000	7025
30.4	226	2.3	46.10	S062	80B4	10000	4000
29.7	232	1.3	47.20	S052	80B4	6000	6000
29.3	222	Ex	95.84	S053	80A2	6000	6000
29.2	222	Ex	95.84	S053	71C2	6000	6000
28.3	246	1.0	32.55	S052	80C6	6000	6000
28.3	246	1.0	32.55	S052	90S6	6000	6000
28.1	231	Ex	99.89	S063	80A2	10000	4000
28.0	232	Ex	99.89	S063	71C2	10000	4000
26.8	257	1.2	52.25	S052	80B4	6000	6000
26.4	264	3.2	34.91	S082	80C6	18000	7200
26.4	264	3.2	34.91	S082	90S6	18000	7200
26.2	263	1.9	53.53	S062	80B4	10000	4000
25.8	267	3.2	54.27	S082	80B4	18000	7200
25.5	270	1.9	55.00	S062	80B4	10000	4000
25.2	276	1.0	36.55	S052	80C6	6000	6000
25.2	276	1.0	36.55	S052	90S6	6000	6000
25.2	276	1.8	36.57	S062	80C6	10000	4000
25.2	276	1.8	36.57	S062	90S6	10000	4000
24.2	284	1.0	57.86	S052	80B4	6000	6000
24.0	271	Ex	117.17	S083	80A2	18000	7200
23.9	272	Ex	117.17	S083	71C2	18000	7200
23.6	295	1.0	39.90	S052	90S6	6000	6000
23.4	297	1.7	39.38	S062	80C6	10000	4000
23.4	297	1.7	39.38	S062	90S6	10000	4000
23.0	302	2.8	40.05	S082	80C6	18000	7200
23.0	302	2.8	40.05	S082	90S6	18000	7200
22.6	304	2.8	61.98	S082	80B4	18000	7200

5.1 S GEARED MOTORS (50Hz)

0.75 kW

n2 [rpm]	M2 [Nm]	fs	i	Gear reducer	Motor	Fr2 D [N]	Fr2 C-L [N]
22.2	292	Ex	126.43	S063	80A2	10000	4000
22.1	293	Ex	126.43	S063	71C2	10000	4000
21.8	299	Ex	128.73	S083	71C2	18000	7200
21.8	298	Ex	128.73	S083	80A2	18000	7200
21.4	325	2.6	43.05	S082	80C6	18000	7200
21.4	325	2.6	43.05	S082	90S6	18000	7200
21.1	329	1.5	43.64	S062	80C6	10000	4000
21.1	329	1.5	43.64	S062	90S6	10000	4000
20.8	331	1.5	67.47	S062	80B4	10000	4000
20.7	325	2.6	67.52	S083	80B4	18000	7200
20.0	348	1.5	46.10	S062	80C6	10000	4000
20.0	348	1.5	46.10	S062	90S6	10000	4000
18.9	357	2.4	74.18	S083	80B4	18000	7200
18.6	350	Ex	150.85	S063	71C2	10000	4000
18.6	349	Ex	150.85	S063	80A2	10000	4000
18.3	379	2.2	50.25	S082	80C6	18000	7200
18.3	379	2.2	50.25	S082	90S6	18000	7200
17.7	367	Ex	158.76	S083	80A2	18000	7200
17.6	368	Ex	158.76	S083	71C2	18000	7200
17.2	404	1.3	53.53	S062	80C6	10000	4000
17.2	404	1.3	53.53	S062	90S6	10000	4000
17.2	392	1.3	81.43	S063	80B4	10000	4000
17.0	410	2.1	54.27	S082	80C6	18000	7200
17.0	410	2.1	54.27	S082	90S6	18000	7200
16.7	415	1.2	55.00	S062	80C6	10000	4000
16.7	415	1.2	55.00	S062	90S6	10000	4000
16.7	416	2.7	55.14	S102	80C6	22000	9000
16.7	416	2.7	55.14	S102	90S6	22000	9000
15.5	448	3.0	59.40	S102	80C6	22000	9000
15.5	448	3.0	59.40	S102	90S6	22000	9000
15.3	440	1.9	91.49	S083	80B4	18000	7200
15.2	428	Ex	185.05	S063	80A2	10000	4000
15.2	427	Ex	184.88	S083	80A2	18000	7200
15.1	429	Ex	185.05	S063	71C2	10000	4000
15.1	429	Ex	184.88	S083	71C2	18000	7200
14.8	468	1.8	61.98	S082	80C6	18000	7200
14.8	468	1.8	61.98	S082	90S6	18000	7200
14.0	480	1.1	99.89	S063	80B4	10000	4000
14.0	482	2.8	100.15	S103	80B4	22000	9000
13.8	471	Ex	203.11	S083	71C2	18000	7200
13.8	470	Ex	203.11	S083	80A2	18000	7200
13.6	509	1.0	67.47	S062	80C6	10000	4000
13.6	509	1.0	67.47	S062	90S6	10000	4000
13.6	499	1.7	67.52	S083	80C6	18000	7200
13.6	499	1.7	67.52	S083	90S6	18000	7200

5.1 S GEARED MOTORS (50Hz)

0.75 kW

n2 [rpm]	M2 [Nm]	fs	i	Gear reducer	Motor	Fr2 D [N]	Fr2 C-L [N]
13.6	512	2.7	67.84	S102	80C6	22000	9000
13.6	512	2.7	67.84	S102	90S6	22000	9000
12.7	532	2.6	110.55	S103	80B4	22000	9000
12.4	548	1.6	74.18	S083	80C6	18000	7200
12.4	548	1.6	74.18	S083	90S6	18000	7200
12.4	548	2.5	74.18	S103	80C6	22000	9000
12.4	548	2.5	74.18	S103	90S6	22000	9000
11.9	564	1.5	117.17	S083	80B4	18000	7200
11.3	602	2.3	81.39	S103	80C6	22000	9000
11.3	602	2.3	81.39	S103	90S6	22000	9000
11.2	581	Ex	250.50	S083	71C2	18000	7200
11.2	579	Ex	250.50	S083	80A2	18000	7200
10.9	619	1.4	128.73	S083	80B4	18000	7200
10.9	619	2.2	128.73	S103	80B4	22000	9000
10.1	676	1.3	91.49	S083	80C6	18000	7200
10.1	676	1.3	91.49	S083	90S6	18000	7200
9.9	679	2.0	141.24	S103	80B4	22000	9000
9.6	678	Ex	292.36	S083	71C2	18000	7200
9.6	676	Ex	292.36	S083	80A2	18000	7200
9.2	740	1.8	100.15	S103	80C6	22000	9000
9.2	740	1.8	100.15	S103	90S6	22000	9000
8.8	764	1.1	158.76	S083	80B4	18000	7200
8.3	817	1.7	110.55	S103	80C6	22000	9000
8.3	817	1.7	110.55	S103	90S6	22000	9000
8.2	832	3.1	112.52	S123	80C6	30000	11200
8.2	832	3.1	112.52	S123	90S6	30000	11200
8.1	836	1.6	173.78	S103	80B4	22000	9000
8.0	848	1.0	117.17	S083	90S6	18000	7200
7.9	854	3.0	177.53	S123	80B4	30000	11200
7.5	912	2.8	123.33	S123	80C6	30000	11200
7.5	912	2.8	123.33	S123	90S6	30000	11200
7.2	936	2.7	194.59	S123	80B4	30000	11200
7.1	951	1.4	128.73	S103	80C6	22000	9000
7.1	951	1.4	128.73	S103	90S6	22000	9000
6.9	977	1.4	203.11	S103	80B4	22000	9000
6.9	989	2.6	133.78	S123	80C6	30000	11200
6.9	989	2.6	133.78	S123	90S6	30000	11200
6.5	1044	1.3	141.24	S103	80C6	22000	9000
6.5	1044	1.3	141.24	S103	90S6	22000	9000
6.3	1072	1.3	222.85	S103	80B4	22000	9000
6.1	1119	2.3	151.43	S123	80C6	30000	11200
6.1	1119	2.3	151.43	S123	90S6	30000	11200
5.9	1149	2.2	238.93	S123	80B4	30000	11200
5.3	1284	1.1	173.78	S103	80C6	22000	9000
5.3	1284	1.1	173.78	S103	90S6	22000	9000

5.1 S GEARED MOTORS (50Hz)

0.75 kW

n2 [rpm]	M2 [Nm]	fs	i	Gear reducer	Motor	Fr2 D [N]	Fr2 C-L [N]
5.2	1312	2.0	177.53	S123	80C6	30000	11200
5.2	1312	2.0	177.53	S123	90S6	30000	11200
5.1	1319	1.0	274.20	S103	80B4	22000	9000
5.0	1347	1.9	280.10	S123	80B4	30000	11200
4.7	1438	1.8	194.59	S123	80C6	30000	11200
4.7	1438	1.8	194.59	S123	90S6	30000	11200
4.6	1448	1.8	301.16	S123	80B4	30000	11200
4.1	1654	1.5	343.93	S123	80B4	30000	11200
3.9	1766	1.5	238.93	S123	80C6	30000	11200
3.9	1766	1.5	238.93	S123	90S6	30000	11200
3.3	2070	1.2	280.10	S123	80C6	30000	11200
3.3	2070	1.2	280.10	S123	90S6	30000	11200
3.1	2226	1.2	301.16	S123	80C6	30000	11200
3.1	2226	1.2	301.16	S123	90S6	30000	11200
2.7	2542	1.0	343.93	S123	80C6	30000	11200
2.7	2542	1.0	343.93	S123	90S6	30000	11200

0.92 kW

n2 [rpm]	M2 [Nm]	fs	i	Gear reducer	Motor	Fr2 D [N]	Fr2 C-L [N]
162.3	52	2.4	8.63	S052	80C4	4061	4061
125.7	67	2.0	11.14	S052	80C4	4358	4358
102.5	82	1.8	13.66	S052	80C4	4599	4599
91.7	92	1.9	15.27	S052	80C4	4734	4734
86.0	98	1.8	16.29	S052	80C4	4811	4811
75.1	112	1.6	18.63	S052	80C4	4973	4973
71.6	118	2.8	19.55	S062	80C4	9080	3632
66.6	127	1.5	21.04	S052	80C4	5119	5119
60.4	140	2.4	23.18	S062	80C4	9509	3804
58.2	145	1.3	24.07	S052	80C4	5279	5279
55.7	151	2.3	25.14	S062	80C4	9717	3887
54.3	155	1.3	25.79	S052	80C4	5360	5360
50.6	167	2.1	27.66	S062	80C4	9962	3985
50.3	168	1.2	27.81	S052	80C4	5447	5447
46.7	181	1.2	30.00	S052	80C4	5533	5533
46.7	181	2.0	30.00	S062	80C4	10000	4000
43.0	196	1.3	32.55	S052	80C4	5624	5624
38.3	220	1.3	36.55	S052	80C4	5747	5747
38.3	220	2.3	36.57	S062	80C4	10000	4000
35.6	237	2.1	39.38	S062	80C4	10000	4000
35.1	240	1.2	39.90	S052	80C4	5836	5836
32.8	257	1.2	42.63	S052	80C4	5900	5900
32.5	259	3.3	43.05	S082	80C4	18000	6845
32.1	263	1.9	43.64	S062	80C4	10000	4000

5.1 S GEARED MOTORS (50Hz)

0.92 kW

n2 [rpm]	M2 [Nm]	fs	i	Gear reducer	Motor	Fr2 D [N]	Fr2 C-L [N]
30.4	278	1.8	46.10	S062	80C4	10000	4000
29.7	284	1.0	47.20	S052	80C4	5993	5993
27.9	303	2.8	50.25	S082	80C4	18000	7175
26.2	322	1.6	53.53	S062	80C4	10000	4000
25.8	327	2.6	54.27	S082	80C4	18000	7200
25.5	331	1.5	55.00	S062	80C4	10000	4000
25.4	332	3.3	55.14	S102	80C4	22000	9000
22.6	373	2.3	61.98	S082	80C4	18000	7200
20.8	406	1.3	67.47	S062	80C4	10000	4000
20.7	398	2.1	67.52	S083	80C4	18000	7200
20.6	409	3.3	67.84	S102	80C4	22000	9000
18.9	438	1.9	74.18	S083	80C4	18000	7200
18.9	438	3.1	74.18	S103	80C4	22000	9000
17.2	480	1.1	81.43	S063	80C4	10000	4000
17.2	480	2.8	81.39	S103	80C4	22000	9000
15.3	540	1.6	91.49	S083	80C4	18000	7200
14.0	591	2.3	100.15	S103	80C4	22000	9000
12.7	652	2.1	110.55	S103	80C4	22000	9000
11.9	691	1.2	117.17	S083	80C4	18000	7200
10.9	759	1.1	128.73	S083	80C4	18000	7200
10.9	759	1.8	128.73	S103	80C4	22000	9000
10.5	789	3.3	133.78	S123	80C4	30000	11200
9.9	833	1.6	141.24	S103	80C4	22000	9000
9.2	893	2.9	151.43	S123	80C4	30000	11200
8.1	1025	1.3	173.78	S103	80C4	22000	9000
7.9	1047	2.4	177.53	S123	80C4	30000	11200
7.2	1148	2.2	194.59	S123	80C4	30000	11200
6.9	1198	1.1	203.11	S103	80C4	22000	9000
6.3	1315	1.0	222.85	S103	80C4	22000	9000
5.9	1410	1.8	238.93	S123	80C4	30000	11200
5.0	1652	1.5	280.10	S123	80C4	30000	11200
4.6	1777	1.4	301.16	S123	80C4	30000	11200
4.1	2029	1.3	343.93	S123	80C4	30000	11200

1.10 kW

n2 [rpm]	M2 [Nm]	fs	i	Gear reducer	Motor	Fr2 D [N]	Fr2 C-L [N]
254.9	38	Ex	11.14	S052	80B2	3537	3537
208.0	47	Ex	13.66	S052	80B2	3749	3749
185.3	53	Ex	15.27	S052	80B2	3871	3871
174.4	56	Ex	16.29	S052	80B2	3937	3937
163.5	62	2.0	8.63	S052	80D4	3994	3994
162.3	62	2.0	8.63	S052	90S4	4002	4002
152.4	64	Ex	18.63	S052	80B2	4083	4083

5.1 S GEARED MOTORS (50Hz)

1.10 kW

n2 [rpm]	M2 [Nm]	fs	i	Gear reducer	Motor	Fr2 D [N]	Fr2 C-L [N]
135.0	72	Ex	21.04	S052	80B2	4218	4218
126.6	80	1.7	11.14	S052	80D4	4273	4273
125.7	80	1.7	11.14	S052	90S4	4281	4281
117.6	83	Ex	24.07	S052	80B2	4372	4372
116.3	88	2.7	8.00	S062	90L6	7819	3128
110.1	92	1.3	8.63	S052	100LR6	4421	4421
109.8	89	Ex	25.79	S052	80B2	4449	4449
107.8	94	1.3	8.63	S052	90L6	4445	4445
103.2	98	1.6	13.66	S052	80D4	4498	4498
102.7	95	Ex	27.66	S062	80B2	8124	3250
102.5	98	1.5	13.66	S052	90S4	4506	4506
101.8	96	Ex	27.81	S052	80B2	4534	4534
99.5	102	2.5	9.55	S062	100LR6	8166	3267
97.4	105	2.5	9.55	S062	90L6	8215	3286
94.7	103	Ex	30.00	S052	80B2	4615	4615
94.7	103	Ex	30.00	S062	80B2	8310	3324
92.3	109	1.6	15.27	S052	80D4	4621	4621
91.7	110	1.6	15.27	S052	90S4	4629	4629
88.5	114	2.8	15.94	S062	80D4	8442	3377
87.8	115	2.8	15.94	S062	90S4	8458	3383
87.3	112	Ex	32.55	S052	80B2	4707	4707
86.6	116	1.5	16.29	S052	80D4	4692	4692
86.0	117	1.5	16.29	S052	90S4	4700	4700
85.3	119	1.1	11.14	S052	100LR6	4702	4702
83.5	122	1.1	11.14	S052	90L6	4725	4725
81.1	126	2.2	11.71	S062	100LR6	8634	3454
79.4	128	2.2	11.71	S062	90L6	8684	3473
77.4	126	Ex	36.55	S052	80B2	4840	4840
77.4	126	Ex	36.57	S062	80B2	8781	3513
75.7	133	1.3	18.63	S052	80D4	4838	4838
75.1	134	1.3	18.63	S052	90S4	4846	4846
72.1	140	2.4	19.55	S062	80D4	8917	3567
72.1	135	Ex	39.38	S062	80B2	8948	3579
71.6	141	2.4	19.55	S062	90S4	8934	3574
71.2	137	Ex	39.90	S052	80B2	4933	4933
71.1	143	2.1	13.36	S062	100LR6	8941	3576
69.6	146	1.0	13.66	S052	100LR6	4920	4920
69.6	146	2.1	13.36	S062	90L6	8991	3596
68.1	150	1.0	13.66	S052	90L6	4942	4942
67.0	150	1.2	21.04	S052	80D4	4968	4968
66.6	152	1.2	21.04	S052	90S4	4975	4975
66.4	147	Ex	42.63	S052	80B2	5009	5009
65.1	150	Ex	43.64	S062	80B2	9194	3677
62.2	164	1.1	15.27	S052	100LR6	5036	5036
61.4	159	Ex	46.10	S062	80B2	9334	3734

5.1 S GEARED MOTORS (50Hz)

1.10 kW

n2 [rpm]	M2 [Nm]	fs	i	Gear reducer	Motor	Fr2 D [N]	Fr2 C-L [N]
60.9	167	1.0	15.27	S052	90L6	5058	5058
60.8	166	2.0	23.18	S062	80D4	9319	3728
60.4	167	2.0	23.18	S062	90S4	9336	3734
60.2	162	Ex	47.20	S052	80B2	5114	5114
59.6	171	1.9	15.94	S062	100LR6	9357	3743
58.6	172	1.1	24.07	S052	80D4	5107	5107
58.4	175	1.9	15.94	S062	90L6	9407	3763
58.2	173	1.1	24.07	S052	90S4	5114	5114
56.1	180	1.9	25.14	S062	80D4	9512	3805
55.7	181	1.9	25.14	S062	90S4	9529	3812
54.7	184	1.1	25.79	S052	80D4	5176	5176
54.3	186	1.1	25.79	S052	90S4	5183	5183
54.2	180	Ex	52.25	S052	80B2	5224	5224
52.9	184	Ex	53.53	S062	80B2	9695	3878
51.5	189	Ex	55.00	S062	80B2	9760	3904
51.0	198	1.7	27.66	S062	80D4	9739	3895
50.7	199	1.0	27.81	S052	80D4	5250	5250
50.6	199	1.7	27.66	S062	90S4	9756	3902
50.3	200	1.0	27.81	S052	90S4	5257	5257
48.9	199	Ex	57.86	S052	80B2	5326	5326
48.6	210	1.6	19.55	S062	100LR6	9839	3936
47.6	214	1.6	19.55	S062	90L6	9890	3956
47.2	216	2.6	20.14	S082	100LR6	18000	6067
47.0	215	1.7	30.00	S062	80D4	9932	3973
46.7	216	1.7	30.00	S062	90S4	9948	3979
46.2	221	2.5	20.14	S082	90L6	18000	6107
45.7	213	Ex	61.98	S082	80B2	18000	6137
43.3	233	1.1	32.55	S052	80D4	5394	5394
43.0	234	1.1	32.55	S052	90S4	5401	5401
42.9	237	2.4	22.13	S082	100LR6	18000	6244
42.1	227	Ex	67.52	S083	80B2	18000	6299
42.0	242	2.4	22.13	S082	90L6	18000	6285
41.9	232	Ex	67.47	S062	80B2	10000	4000
41.0	249	1.4	23.18	S062	100LR6	10000	4000
40.1	254	1.3	23.18	S062	90L6	10000	4000
40.1	251	3.4	34.91	S082	90S4	18000	6378
39.6	257	2.2	24.00	S082	100LR6	18000	6402
38.8	263	2.2	24.00	S082	90L6	18000	6443
38.6	261	1.1	36.55	S052	80D4	5491	5491
38.6	262	1.9	36.57	S062	80D4	10000	4000
38.3	263	1.1	36.55	S052	90S4	5497	5497
38.3	263	1.9	36.57	S062	90S4	10000	4000
38.1	250	Ex	74.18	S083	80B2	18000	6490
37.8	270	1.3	25.14	S062	100LR6	10000	4000
37.0	275	1.3	25.14	S062	90L6	10000	4000

5.1 S GEARED MOTORS (50Hz)

1.10 kW

n2 [rpm]	M2 [Nm]	fs	i	Gear reducer	Motor	Fr2 D [N]	Fr2 C-L [N]
35.8	282	1.8	39.38	S062	80D4	10000	4000
35.6	284	1.8	39.38	S062	90S4	10000	4000
35.3	285	1.0	39.90	S052	80D4	5558	5558
35.2	286	3.0	40.05	S082	80D4	18000	6636
35.1	287	1.0	39.90	S052	90S4	5563	5563
35.0	289	2.9	40.05	S082	90S4	18000	6650
34.8	274	Ex	81.43	S063	80B2	10000	4000
34.8	293	2.2	27.29	S082	100LR6	18000	6656
34.4	297	1.2	27.66	S062	100LR6	10000	4000
34.1	299	2.2	27.29	S082	90L6	18000	6699
33.6	303	1.1	27.66	S062	90L6	10000	4000
33.1	307	2.1	28.67	S082	100LR6	18000	6756
32.7	308	2.8	43.05	S082	80D4	18000	6783
32.5	310	2.7	43.05	S082	90S4	18000	6797
32.4	314	2.1	28.67	S082	90L6	18000	6800
32.3	312	1.6	43.64	S062	80D4	10000	4000
32.1	314	1.6	43.64	S062	90S4	10000	4000
31.7	322	1.1	30.00	S062	100LR6	10000	4000
31.0	329	1.1	30.00	S062	90L6	10000	4000
30.9	308	Ex	91.49	S083	80B2	18000	6917
30.6	330	1.5	46.10	S062	80D4	10000	4000
30.4	332	1.5	46.10	S062	90S4	10000	4000
29.9	341	2.5	31.78	S082	100LR6	18000	6968
29.3	348	2.4	31.78	S082	90L6	18000	7012
28.3	336	Ex	99.89	S063	80B2	10000	4000
28.1	359	2.4	50.25	S082	80D4	18000	7104
27.9	362	2.3	50.25	S082	90S4	18000	7120
27.2	374	2.3	34.91	S082	100LR6	18000	7166
27.2	374	3.2	34.91	S102	100LR6	22000	8870
26.6	382	2.2	34.91	S082	90L6	18000	7200
26.6	382	3.1	34.91	S102	90L6	22000	8929
26.3	383	1.3	53.53	S062	80D4	10000	4000
26.2	386	1.3	53.53	S062	90S4	10000	4000
26.0	392	1.3	36.57	S062	100LR6	10000	4000
26.0	388	2.2	54.27	S082	80D4	18000	7200
25.8	391	2.2	54.27	S082	90S4	18000	7200
25.6	393	1.3	55.00	S062	80D4	10000	4000
25.6	394	2.8	55.14	S102	80D4	22000	9000
25.5	396	1.3	55.00	S062	90S4	10000	4000
25.4	401	1.3	36.57	S062	90L6	10000	4000
25.4	397	2.8	55.14	S102	90S4	22000	9000
24.8	411	3.1	38.30	S102	100LR6	22000	9000
24.3	420	3.1	38.30	S102	90L6	22000	9000
24.2	395	Ex	117.17	S083	80B2	18000	7200
24.1	422	1.2	39.38	S062	100LR6	10000	4000

5.1 S GEARED MOTORS (50Hz)

1.10 kW

n2 [rpm]	M2 [Nm]	fs	i	Gear reducer	Motor	Fr2 D [N]	Fr2 C-L [N]
23.7	429	2.0	40.05	S082	100LR6	18000	7200
23.7	425	3.2	59.40	S102	80D4	22000	9000
23.6	431	1.2	39.38	S062	90L6	10000	4000
23.6	428	3.2	59.40	S102	90S4	22000	9000
23.2	439	1.9	40.05	S082	90L6	18000	7200
22.8	443	1.9	61.98	S082	80D4	18000	7200
22.6	446	1.9	61.98	S082	90S4	18000	7200
22.1	462	1.8	43.05	S082	100LR6	18000	7200
22.0	433	Ex	128.73	S083	80B2	18000	7200
21.8	468	1.1	43.64	S062	100LR6	10000	4000
21.6	472	1.8	43.05	S082	90L6	18000	7200
21.6	472	2.4	44.00	S102	100LR6	22000	9000
21.3	478	1.1	43.64	S062	90L6	10000	4000
21.1	482	2.3	44.00	S102	90L6	22000	9000
20.9	483	1.1	67.47	S062	80D4	10000	4000
20.9	473	1.8	67.52	S083	80D4	18000	7200
20.8	486	1.0	67.47	S062	90S4	10000	4000
20.8	485	2.8	67.84	S102	80D4	22000	9000
20.7	476	1.8	67.52	S083	90S4	18000	7200
20.6	489	2.8	67.84	S102	90S4	22000	9000
20.2	505	1.0	46.10	S062	90L6	10000	4000
20.2	505	2.7	47.13	S102	100LR6	22000	9000
19.7	516	2.6	47.13	S102	90L6	22000	9000
19.0	520	1.6	74.18	S083	80D4	18000	7200
19.0	520	2.6	74.18	S103	80D4	22000	9000
18.9	539	1.6	50.25	S082	100LR6	18000	7200
18.9	523	1.6	74.18	S083	90S4	18000	7200
18.9	523	2.6	74.18	S103	90S4	22000	9000
18.5	550	1.5	50.25	S082	90L6	18000	7200
17.8	535	Ex	158.76	S083	80B2	18000	7200
17.5	582	1.5	54.27	S082	100LR6	18000	7200
17.3	570	2.4	81.39	S103	80D4	22000	9000
17.2	591	1.9	55.14	S102	100LR6	22000	9000
17.2	574	2.4	81.39	S103	90S4	22000	9000
17.1	594	1.4	54.27	S082	90L6	18000	7200
16.9	604	1.8	55.14	S102	90L6	22000	9000
16.0	637	2.1	59.40	S102	100LR6	22000	9000
15.7	651	2.1	59.40	S102	90L6	22000	9000
15.4	641	1.3	91.49	S083	80D4	18000	7200
15.3	664	1.3	61.98	S082	100LR6	18000	7200
15.3	645	1.3	91.49	S083	90S4	18000	7200
15.3	623	Ex	184.88	S083	80B2	18000	7200
15.0	679	1.3	61.98	S082	90L6	18000	7200
14.1	709	1.2	67.52	S083	100LR6	18000	7200
14.1	701	1.9	100.15	S103	80D4	22000	9000

5.1 S GEARED MOTORS (50Hz)

1.10 kW

n2 [rpm]	M2 [Nm]	fs	i	Gear reducer	Motor	Fr2 D [N]	Fr2 C-L [N]
14.0	727	1.9	67.84	S102	100LR6	22000	9000
14.0	706	1.9	100.15	S103	90S4	22000	9000
13.8	724	1.2	67.52	S083	90L6	18000	7200
13.7	743	1.8	67.84	S102	90L6	22000	9000
13.4	746	3.1	71.07	S123	100LR6	30000	11200
12.8	779	1.1	74.18	S083	100LR6	18000	7200
12.8	774	1.8	110.55	S103	80D4	22000	9000
12.8	779	1.8	74.18	S103	100LR6	22000	9000
12.7	780	1.8	110.55	S103	90S4	22000	9000
12.5	796	1.1	74.18	S083	90L6	18000	7200
12.5	796	1.7	74.18	S103	90L6	22000	9000
12.5	788	3.2	112.52	S123	80D4	30000	11200
12.4	794	3.2	112.52	S123	90S4	30000	11200
12.0	821	1.0	117.17	S083	80D4	18000	7200
11.9	826	1.0	117.17	S083	90S4	18000	7200
11.7	855	1.6	81.39	S103	100LR6	22000	9000
11.4	873	1.6	81.39	S103	90L6	22000	9000
11.4	864	3.0	123.33	S123	80D4	30000	11200
11.4	870	2.9	123.33	S123	90S4	30000	11200
11.0	902	1.5	128.73	S103	80D4	22000	9000
10.9	908	1.5	128.73	S103	90S4	22000	9000
10.9	916	2.8	87.27	S123	100LR6	30000	11200
10.5	937	2.7	133.78	S123	80D4	30000	11200
10.5	944	2.7	133.78	S123	90S4	30000	11200
10.0	989	1.4	141.24	S103	80D4	22000	9000
9.9	996	1.4	141.24	S103	90S4	22000	9000
9.5	1051	1.3	100.15	S103	100LR6	22000	9000
9.3	1074	1.3	100.15	S103	90L6	22000	9000
9.3	1061	2.4	151.43	S123	80D4	30000	11200
9.2	1068	2.4	151.43	S123	90S4	30000	11200
8.6	1161	1.2	110.55	S103	100LR6	22000	9000
8.4	1186	1.2	110.55	S103	90L6	22000	9000
8.4	1181	2.2	112.52	S123	100LR6	30000	11200
8.3	1207	2.1	112.52	S123	90L6	30000	11200
8.1	1217	1.1	173.78	S103	80D4	22000	9000
8.1	1226	1.1	173.78	S103	90S4	22000	9000
7.9	1243	2.1	177.53	S123	80D4	30000	11200
7.9	1252	2.0	177.53	S123	90S4	30000	11200
7.7	1295	2.0	123.33	S123	100LR6	30000	11200
7.5	1323	1.9	123.33	S123	90L6	30000	11200
7.4	1351	1.0	128.73	S103	100LR6	22000	9000
7.2	1363	1.9	194.59	S123	80D4	30000	11200
7.2	1372	1.9	194.59	S123	90S4	30000	11200
7.1	1404	1.8	133.78	S123	100LR6	30000	11200
7.0	1435	1.8	133.78	S123	90L6	30000	11200

5.1 S GEARED MOTORS (50Hz)

1.10 kW

n2 [rpm]	M2 [Nm]	fs	i	Gear reducer	Motor	Fr2 D [N]	Fr2 C-L [N]
6.3	1590	1.6	151.43	S123	100LR6	30000	11200
6.1	1624	1.6	151.43	S123	90L6	30000	11200
5.9	1673	1.5	238.93	S123	80D4	30000	11200
5.9	1685	1.5	238.93	S123	90S4	30000	11200
5.4	1864	1.4	177.53	S123	100LR6	30000	11200
5.2	1904	1.3	177.53	S123	90L6	30000	11200
5.0	1962	1.3	280.10	S123	80D4	30000	11200
5.0	1976	1.3	280.10	S123	90S4	30000	11200
4.9	2043	1.3	194.59	S123	100LR6	30000	11200
4.8	2087	1.2	194.59	S123	90L6	30000	11200
4.7	2109	1.2	301.16	S123	80D4	30000	11200
4.6	2124	1.2	301.16	S123	90S4	30000	11200
4.1	2409	1.1	343.93	S123	80D4	30000	11200
4.1	2426	1.1	343.93	S123	90S4	30000	11200
4.0	2508	1.0	238.93	S123	100LR6	30000	11200
3.9	2562	1.0	238.93	S123	90L6	30000	11200

1.50 kW

n2 [rpm]	M2 [Nm]	fs	i	Gear reducer	Motor	Fr2 D [N]	Fr2 C-L [N]
332.8	40	Ex	8.63	S052	90S2	3211	3211
325.8	41	Ex	8.63	S052	80C2	3230	3230
257.6	52	Ex	11.14	S052	90S2	3447	3447
252.2	53	Ex	11.14	S052	80C2	3467	3467
208.0	64	Ex	13.66	S052	90S2	3650	3650
205.8	64	Ex	13.66	S052	80C2	3660	3660
187.9	71	Ex	15.27	S052	90S2	3747	3747
184.0	72	Ex	15.27	S052	80C2	3767	3767
175.6	76	Ex	16.29	S052	90S2	3812	3812
172.5	77	Ex	16.29	S052	80C2	3829	3829
164.6	84	1.5	8.63	S052	90L4	3857	3857
162.3	85	1.5	8.63	S052	90LA4	3871	3871
152.4	87	Ex	18.63	S052	90S2	3949	3949
150.8	88	Ex	18.63	S052	80C2	3959	3959
148.8	92	2.8	9.55	S062	90L4	7134	2854
146.7	94	2.8	9.55	S062	90LA4	7162	2865
146.3	91	Ex	19.55	S062	90S2	7188	2875
143.7	92	Ex	19.55	S062	80C2	7223	2889
136.0	98	Ex	21.04	S052	90S2	4059	4059
133.6	99	Ex	21.04	S052	80C2	4076	4076
127.5	108	1.3	11.14	S052	90L4	4099	4099
125.7	109	1.3	11.14	S052	90LA4	4112	4112
123.4	108	Ex	23.18	S062	90S2	7530	3012
121.3	113	2.5	11.71	S062	90L4	7540	3016

5.1 S GEARED MOTORS (50Hz)

1.50 kW

n2 [rpm]	M2 [Nm]	fs	i	Gear reducer	Motor	Fr2 D [N]	Fr2 C-L [N]
121.2	109	Ex	23.18	S062	80C2	7566	3026
119.6	115	2.5	11.71	S062	90LA4	7568	3027
118.8	112	Ex	24.07	S052	90S2	4187	4187
117.5	118	2.0	8.00	S062	100L6	7596	3038
116.8	114	Ex	24.07	S052	80C2	4204	4204
116.3	119	2.0	8.00	S062	100LA6	7617	3047
113.8	117	Ex	25.14	S062	90S2	7695	3078
111.8	119	Ex	25.14	S062	80C2	7732	3093
110.9	120	Ex	25.79	S052	90S2	4252	4252
109.0	122	Ex	25.79	S052	80C2	4269	4269
106.3	129	2.3	13.36	S062	90L4	7805	3122
104.8	131	2.3	13.36	S062	90LA4	7834	3134
104.0	132	1.1	13.66	S052	90L4	4285	4285
102.7	129	Ex	27.66	S062	90S2	7905	3162
102.5	134	1.1	13.66	S052	90LA4	4298	4298
102.1	130	Ex	27.81	S052	90S2	4329	4329
101.6	131	Ex	27.66	S062	80C2	7927	3171
101.0	131	Ex	27.81	S052	80C2	4339	4339
98.5	141	1.8	9.55	S062	100L6	7952	3181
97.4	143	1.8	9.55	S062	100LA6	7974	3189
94.7	140	Ex	30.00	S052	90S2	4398	4398
94.7	140	Ex	30.00	S062	90S2	8073	3229
93.7	142	Ex	30.00	S052	80C2	4408	4408
93.7	142	Ex	30.00	S062	80C2	8095	3238
93.0	148	1.2	15.27	S052	90L4	4384	4384
91.7	150	1.2	15.27	S052	90LA4	4397	4397
89.1	154	2.1	15.94	S062	90L4	8165	3266
87.8	157	2.1	15.94	S062	90LA4	8194	3277
87.3	152	Ex	32.55	S052	90S2	4471	4471
87.2	158	1.1	16.29	S052	90L4	4440	4440
86.3	154	Ex	32.55	S052	80C2	4481	4481
86.0	160	1.1	16.29	S052	90LA4	4452	4452
80.3	173	1.6	11.71	S062	100L6	8366	3347
79.4	175	1.6	11.71	S062	100LA6	8388	3355
77.7	171	Ex	36.55	S052	90S2	4571	4571
77.7	171	Ex	36.57	S062	90S2	8484	3394
76.9	173	Ex	36.55	S052	80C2	4580	4580
76.8	173	Ex	36.57	S062	80C2	8506	3402
72.6	189	1.8	19.55	S062	90L4	8581	3432
72.1	184	Ex	39.38	S062	90S2	8637	3455
71.6	192	1.7	19.55	S062	90LA4	8609	3444
71.4	186	Ex	39.38	S062	80C2	8659	3464
71.2	186	Ex	39.90	S052	90S2	4644	4644
70.5	195	2.8	20.14	S082	90L4	18000	5308
70.4	188	Ex	39.90	S052	80C2	4652	4652

5.1 S GEARED MOTORS (50Hz)

1.50 kW

n2 [rpm]	M2 [Nm]	fs	i	Gear reducer	Motor	Fr2 D [N]	Fr2 C-L [N]
70.4	197	1.5	13.36	S062	100L6	8632	3453
70.2	189	Ex	40.05	S082	80C2	18000	5322
69.6	199	1.5	13.36	S062	100LA6	8654	3461
69.5	198	2.8	20.14	S082	90LA4	18000	5331
66.6	199	Ex	42.63	S052	90S2	4696	4696
66.0	201	Ex	43.05	S082	90S2	18000	5424
65.9	201	Ex	42.63	S052	80C2	4704	4704
65.3	203	Ex	43.05	S082	80C2	18000	5442
65.1	204	Ex	43.64	S062	90S2	8849	3540
64.4	206	Ex	43.64	S062	80C2	8871	3548
64.2	214	2.7	22.13	S082	90L4	18000	5463
63.3	217	2.6	22.13	S082	90LA4	18000	5486
61.6	215	Ex	46.10	S062	90S2	8961	3585
61.3	224	1.5	23.18	S062	90L4	8923	3569
61.0	218	Ex	46.10	S062	80C2	8983	3593
60.4	228	1.5	23.18	S062	90LA4	8951	3581
60.2	221	Ex	47.20	S052	90S2	4772	4772
59.5	223	Ex	47.20	S052	80C2	4780	4780
59.2	232	2.5	24.00	S082	90L4	18000	5600
59.0	235	1.4	15.94	S062	100L6	8984	3594
58.4	238	1.4	15.94	S062	100LA6	9005	3602
58.3	236	2.4	24.00	S082	90LA4	18000	5624
56.5	243	1.4	25.14	S062	90L4	9084	3634
56.5	235	Ex	50.25	S082	90S2	18000	5686
55.9	237	Ex	50.25	S082	80C2	18000	5704
55.7	247	1.4	25.14	S062	90LA4	9112	3645
54.4	256	2.2	17.29	S082	100L6	18000	5743
53.8	258	2.1	17.29	S082	100LA6	18000	5762
53.1	250	Ex	53.53	S062	90S2	9263	3705
52.5	253	Ex	53.53	S062	80C2	9285	3714
52.3	254	Ex	54.27	S082	90S2	18000	5820
52.0	264	2.5	27.29	S082	90L4	18000	5822
51.8	256	Ex	54.27	S082	80C2	18000	5839
51.6	257	Ex	55.00	S062	90S2	9317	3727
51.3	268	1.3	27.66	S062	90L4	9269	3708
51.3	268	2.4	27.29	S082	90LA4	18000	5846
51.1	260	Ex	55.00	S062	80C2	9338	3735
50.6	272	1.3	27.66	S062	90LA4	9296	3719
49.5	278	2.3	28.67	S082	90L4	18000	5909
48.8	282	2.3	28.67	S082	90LA4	18000	5934
48.1	289	1.1	19.55	S062	100L6	9376	3750
47.6	292	1.1	19.55	S062	100LA6	9396	3758
47.3	291	1.2	30.00	S062	90L4	9424	3769
46.7	295	1.2	30.00	S062	90LA4	9450	3780
46.7	298	1.9	20.14	S082	100L6	18000	6012

5.1 S GEARED MOTORS (50Hz)

1.50 kW

n2 [rpm]	M2 [Nm]	fs	i	Gear reducer	Motor	Fr2 D [N]	Fr2 C-L [N]
46.2	301	1.8	20.14	S082	100LA6	18000	6031
45.8	290	Ex	61.98	S082	90S2	18000	6058
45.3	293	Ex	61.98	S082	80C2	18000	6077
44.7	308	2.8	31.78	S082	90L4	18000	6094
44.1	312	2.7	31.78	S082	90LA4	18000	6119
42.5	327	1.8	22.13	S082	100L6	18000	6183
42.1	315	Ex	67.47	S062	90S2	9712	3885
42.1	309	Ex	67.52	S083	90S2	18000	6221
42.0	330	1.7	22.13	S082	100LA6	18000	6202
41.7	319	Ex	67.47	S062	80C2	9731	3893
41.6	312	Ex	67.52	S083	80C2	18000	6241
40.7	338	2.5	34.91	S082	90L4	18000	6266
40.1	343	2.5	34.91	S082	90LA4	18000	6293
39.2	355	1.6	24.00	S082	100L6	18000	6333
38.8	354	1.4	36.57	S062	90L4	9781	3913
38.8	358	1.6	24.00	S082	100LA6	18000	6353
38.3	359	1.4	36.57	S062	90LA4	9806	3922
38.3	339	Ex	74.18	S083	90S2	18000	6398
37.9	343	Ex	74.18	S083	80C2	18000	6418
36.6	376	3.4	38.30	S102	90LA4	22000	8020
36.1	381	1.3	39.38	S062	90L4	9906	3962
35.6	387	1.3	39.38	S062	90LA4	9929	3972
35.5	388	2.2	40.05	S082	90L4	18000	6525
35.0	393	2.2	40.05	S082	90LA4	18000	6552
34.9	373	Ex	81.43	S063	90S2	10000	4000
34.5	377	Ex	81.43	S063	80C2	10000	4000
34.4	403	1.6	27.29	S082	100L6	18000	6576
34.1	408	1.6	27.29	S082	100LA6	18000	6597
33.0	417	2.0	43.05	S082	90L4	18000	6664
32.8	424	1.5	28.67	S082	100L6	18000	6672
32.5	423	1.2	43.64	S062	90L4	10000	4000
32.5	423	2.0	43.05	S082	90LA4	18000	6691
32.4	428	1.5	28.67	S082	100LA6	18000	6692
32.3	426	2.6	44.00	S102	90L4	22000	8332
32.1	429	1.2	43.64	S062	90LA4	10000	4000
31.8	432	2.6	44.00	S102	90LA4	22000	8368
31.5	441	2.4	29.87	S102	100L6	22000	8392
31.1	446	2.4	29.87	S102	100LA6	22000	8420
31.0	419	Ex	91.49	S083	90S2	18000	6805
30.8	446	1.1	46.10	S062	90L4	10000	4000
30.7	423	Ex	91.49	S083	80C2	18000	6826
30.4	453	1.1	46.10	S062	90LA4	10000	4000
30.1	456	3.0	47.13	S102	90L4	22000	8507
29.7	463	2.9	47.13	S102	90LA4	22000	8544
29.6	470	1.8	31.78	S082	100L6	18000	6872

5.1 S GEARED MOTORS (50Hz)

1.50 kW

n2 [rpm]	M2 [Nm]	fs	i	Gear reducer	Motor	Fr2 D [N]	Fr2 C-L [N]
29.3	475	1.8	31.78	S082	100LA6	18000	6894
29.0	479	2.7	32.40	S102	100L6	22000	8602
28.7	484	2.6	32.40	S102	100LA6	22000	8630
28.3	487	1.7	50.25	S082	90L4	18000	6968
27.9	494	1.7	50.25	S082	90LA4	18000	6996
26.9	516	1.6	34.91	S082	100L6	18000	7060
26.9	516	2.3	34.91	S102	100L6	22000	8798
26.6	521	1.6	34.91	S082	100LA6	18000	7081
26.6	521	2.3	34.91	S102	100LA6	22000	8826
26.2	526	1.6	54.27	S082	90L4	18000	7122
25.8	533	1.6	54.27	S082	90LA4	18000	7151
25.8	534	2.1	55.14	S102	90L4	22000	8920
25.4	542	2.0	55.14	S102	90LA4	22000	8958
24.5	566	2.3	38.30	S102	100L6	22000	9000
24.3	572	2.2	38.30	S102	100LA6	22000	9000
24.2	536	Ex	117.17	S083	90S2	18000	7200
24.0	542	Ex	117.17	S083	80C2	18000	7200
23.9	575	2.4	59.40	S102	90L4	22000	9000
23.6	583	2.3	59.40	S102	90LA4	22000	9000
23.5	592	1.4	40.05	S082	100L6	18000	7200
23.2	598	1.4	40.05	S082	100LA6	18000	7200
22.9	600	1.4	61.98	S082	90L4	18000	7200
22.6	609	1.4	61.98	S082	90LA4	18000	7200
22.1	589	Ex	128.73	S083	90S2	18000	7200
21.8	636	1.3	43.05	S082	100L6	18000	7200
21.8	595	Ex	128.73	S083	80C2	18000	7200
21.6	643	1.3	43.05	S082	100LA6	18000	7200
21.4	650	1.7	44.00	S102	100L6	22000	9000
21.1	657	1.7	44.00	S102	100LA6	22000	9000
21.0	640	1.3	67.52	S083	90L4	18000	7200
20.9	657	2.1	67.84	S102	90L4	22000	9000
20.7	649	1.3	67.52	S083	90LA4	18000	7200
20.6	666	2.0	67.84	S102	90LA4	22000	9000
19.9	696	2.0	47.13	S102	100L6	22000	9000
19.7	704	1.9	47.13	S102	100LA6	22000	9000
19.2	725	2.8	49.04	S122	100L6	30000	11200
19.1	703	1.2	74.18	S083	90L4	18000	7200
19.1	703	1.9	74.18	S103	90L4	22000	9000
19.0	732	2.8	49.04	S122	100LA6	30000	11200
18.9	713	1.2	74.18	S083	90LA4	18000	7200
18.9	713	1.9	74.18	S103	90LA4	22000	9000
18.7	742	1.1	50.25	S082	100L6	18000	7200
18.5	750	1.1	50.25	S082	100LA6	18000	7200
17.5	794	2.8	53.75	S122	100L6	30000	11200
17.4	772	1.8	81.39	S103	90L4	22000	9000

5.1 S GEARED MOTORS (50Hz)

1.50 kW

n2 [rpm]	M2 [Nm]	fs	i	Gear reducer	Motor	Fr2 D [N]	Fr2 C-L [N]
17.3	802	1.1	54.27	S082	100L6	18000	7200
17.3	803	2.8	53.75	S122	100LA6	30000	11200
17.2	783	1.7	81.39	S103	90LA4	22000	9000
17.1	810	1.0	54.27	S082	100LA6	18000	7200
17.0	815	1.4	55.14	S102	100L6	22000	9000
16.9	823	1.3	55.14	S102	100LA6	22000	9000
15.8	878	1.6	59.40	S102	100L6	22000	9000
15.7	887	1.5	59.40	S102	100LA6	22000	9000
14.2	950	1.4	100.15	S103	90L4	22000	9000
14.2	975	2.6	66.00	S122	100L6	30000	11200
14.1	986	2.6	66.00	S122	100LA6	30000	11200
14.0	963	1.4	100.15	S103	90LA4	22000	9000
13.9	1002	1.4	67.84	S102	100L6	22000	9000
13.7	1013	1.3	67.84	S102	100LA6	22000	9000
13.2	1028	2.2	71.07	S123	100L6	30000	11200
13.1	1039	2.2	71.07	S123	100LA6	30000	11200
12.8	1048	1.3	110.55	S103	90L4	22000	9000
12.7	1063	1.3	110.55	S103	90LA4	22000	9000
12.7	1073	1.3	74.18	S103	100L6	22000	9000
12.6	1067	2.4	112.52	S123	90L4	30000	11200
12.5	1085	1.3	74.18	S103	100LA6	22000	9000
12.4	1082	2.4	112.52	S123	90LA4	30000	11200
11.5	1178	1.2	81.39	S103	100L6	22000	9000
11.5	1169	2.2	123.33	S123	90L4	30000	11200
11.4	1190	1.1	81.39	S103	100LA6	22000	9000
11.4	1186	2.2	123.33	S123	90LA4	30000	11200
11.0	1221	1.1	128.73	S103	90L4	22000	9000
10.9	1238	1.1	128.73	S103	90LA4	22000	9000
10.8	1263	2.0	87.27	S123	100L6	30000	11200
10.7	1276	2.0	87.27	S123	100LA6	30000	11200
10.6	1269	2.0	133.78	S123	90L4	30000	11200
10.5	1287	2.0	133.78	S123	90LA4	30000	11200
10.1	1339	1.0	141.24	S103	90L4	22000	9000
9.9	1358	1.0	141.24	S103	90LA4	22000	9000
9.4	1436	1.8	151.43	S123	90L4	30000	11200
9.2	1457	1.8	151.43	S123	90LA4	30000	11200
8.4	1628	1.6	112.52	S123	100L6	30000	11200
8.3	1645	1.6	112.52	S123	100LA6	30000	11200
8.0	1683	1.5	177.53	S123	90L4	30000	11200
7.9	1708	1.5	177.53	S123	90LA4	30000	11200
7.6	1784	1.4	123.33	S123	100L6	30000	11200
7.5	1804	1.4	123.33	S123	100LA6	30000	11200
7.3	1845	1.4	194.59	S123	90L4	30000	11200
7.2	1872	1.4	194.59	S123	90LA4	30000	11200
7.0	1936	1.3	133.78	S123	100L6	30000	11200

5.1 S GEARED MOTORS (50Hz)

1.50 kW

n2 [rpm]	M2 [Nm]	fs	i	Gear reducer	Motor	Fr2 D [N]	Fr2 C-L [N]
7.0	1956	1.3	133.78	S123	100LA6	30000	11200
6.2	2191	1.2	151.43	S123	100L6	30000	11200
6.1	2215	1.2	151.43	S123	100LA6	30000	11200
5.9	2266	1.1	238.93	S123	90L4	30000	11200
5.9	2298	1.1	238.93	S123	90LA4	30000	11200

1.85 kW

n2 [rpm]	M2 [Nm]	fs	i	Gear reducer	Motor	Fr2 D [N]	Fr2 C-L [N]
175.0	97	2.5	8.00	S062	90LB4	6703	2681
162.3	104	1.2	8.63	S052	90LB4	3756	3756
146.7	116	2.2	9.55	S062	90LB4	7023	2809
125.7	135	1.0	11.14	S052	90LB4	3963	3963
119.6	142	2.0	11.71	S062	90LB4	7398	2959
116.3	147	1.6	8.00	S062	100LB6	7441	2976
104.8	162	1.9	13.36	S062	90LB4	7640	3056
97.4	176	1.5	9.55	S062	100LB6	7763	3105
93.5	183	2.6	9.94	S082	100LB6	16905	4830
87.8	193	1.7	15.94	S062	90LB4	7962	3185
80.9	210	2.6	17.29	S082	90LB4	17673	5049
80.1	214	2.4	11.61	S082	100LB6	17721	5063
79.4	216	1.3	11.71	S062	100LB6	8129	3252
72.9	235	2.3	12.75	S082	100LB6	18000	5209
71.6	237	1.4	19.55	S062	90LB4	8325	3330
69.6	246	1.2	13.36	S062	100LB6	8359	3343
69.5	244	2.3	20.14	S082	90LB4	18000	5287
63.3	268	2.1	22.13	S082	90LB4	18000	5439
60.4	281	1.2	23.18	S062	90LB4	8615	3446
58.4	294	1.1	15.94	S062	100LB6	8653	3461
58.3	291	2.0	24.00	S082	90LB4	18000	5572
55.7	305	1.1	25.14	S062	90LB4	8747	3499
53.8	319	1.7	17.29	S082	100LB6	18000	5705
51.3	331	2.0	27.29	S082	90LB4	18000	5788
50.6	335	1.0	27.66	S062	90LB4	8895	3558
48.8	347	1.9	28.67	S082	90LB4	18000	5872
46.2	371	1.5	20.14	S082	100LB6	18000	5965
44.1	385	2.2	31.78	S082	90LB4	18000	6051
43.2	393	3.3	32.40	S102	90LB4	22000	7562
42.0	408	1.4	22.13	S082	100LB6	18000	6130
42.0	408	2.5	22.13	S102	100LB6	22000	7623
40.1	423	2.0	34.91	S082	90LB4	18000	6217
40.1	423	2.8	34.91	S102	90LB4	22000	7736
38.8	442	1.3	24.00	S082	100LB6	18000	6275
38.3	443	1.2	36.57	S062	90LB4	9274	3710

5.1 S GEARED MOTORS (50Hz)

1.85 kW

n2 [rpm]	M2 [Nm]	fs	i	Gear reducer	Motor	Fr2 D [N]	Fr2 C-L [N]
38.3	447	2.4	24.28	S102	100LB6	22000	7840
36.6	464	2.8	38.30	S102	90LB4	22000	7955
35.6	477	1.1	39.38	S062	90LB4	9357	3743
35.3	485	2.2	26.33	S102	100LB6	22000	8034
35.0	485	1.8	40.05	S082	90LB4	18000	6466
34.1	503	1.3	27.29	S082	100LB6	18000	6508
32.5	522	1.6	43.05	S082	90LB4	18000	6599
32.4	528	1.2	28.67	S082	100LB6	18000	6599
31.8	533	2.1	44.00	S102	90LB4	22000	8293
31.1	550	2.0	29.87	S102	100LB6	22000	8342
29.7	571	2.4	47.13	S102	90LB4	22000	8464
29.3	585	1.5	31.78	S082	100LB6	18000	6790
28.7	597	2.1	32.40	S102	100LB6	22000	8546
27.9	609	1.4	50.25	S082	90LB4	18000	6888
26.6	643	1.3	34.91	S082	100LB6	18000	6967
26.6	643	1.9	34.91	S102	100LB6	22000	8736
26.0	651	3.4	53.75	S122	90LB4	30000	11200
25.8	657	1.3	54.27	S082	90LB4	18000	7034
25.4	668	1.7	55.14	S102	90LB4	22000	8864
24.3	706	1.8	38.30	S102	100LB6	22000	8976
23.6	720	1.9	59.40	S102	90LB4	22000	9000
23.2	738	1.2	40.05	S082	100LB6	18000	7200
22.6	751	1.1	61.98	S082	90LB4	18000	7200
21.6	793	1.1	43.05	S082	100LB6	18000	7200
21.3	803	3.2	43.60	S122	100LB6	30000	11200
21.2	800	3.2	66.00	S122	90LB4	30000	11200
21.1	810	1.4	44.00	S102	100LB6	22000	9000
20.7	801	1.1	67.52	S083	90LB4	18000	7200
20.6	822	1.7	67.84	S102	90LB4	22000	9000
19.7	868	1.6	47.13	S102	100LB6	22000	9000
19.0	903	2.3	49.04	S122	100LB6	30000	11200
18.9	880	1.6	74.18	S103	90LB4	22000	9000
17.3	990	2.2	53.75	S122	100LB6	30000	11200
17.2	966	1.4	81.39	S103	90LB4	22000	9000
16.9	1016	1.1	55.14	S102	100LB6	22000	9000
15.7	1094	1.2	59.40	S102	100LB6	22000	9000
14.1	1216	2.1	66.00	S122	100LB6	30000	11200
14.0	1188	1.1	100.15	S103	90LB4	22000	9000
13.7	1250	1.1	67.84	S102	100LB6	22000	9000
13.1	1282	1.8	71.07	S123	100LB6	30000	11200
12.7	1311	1.0	110.55	S103	90LB4	22000	9000
12.5	1338	1.0	74.18	S103	100LB6	22000	9000
12.4	1335	1.9	112.52	S123	90LB4	30000	11200
11.4	1463	1.7	123.33	S123	90LB4	30000	11200
10.7	1574	1.6	87.27	S123	100LB6	30000	11200

5.1 S GEARED MOTORS (50Hz)

1.85 kW

n2 [rpm]	M2 [Nm]	fs	i	Gear reducer	Motor	Fr2 D [N]	Fr2 C-L [N]
10.5	1587	1.6	133.78	S123	90LB4	30000	11200
9.2	1796	1.4	151.43	S123	90LB4	30000	11200
8.3	2029	1.3	112.52	S123	100LB6	30000	11200
7.9	2106	1.2	177.53	S123	90LB4	30000	11200
7.5	2224	1.2	123.33	S123	100LB6	30000	11200
7.2	2308	1.1	194.59	S123	90LB4	30000	11200
7.0	2413	1.1	133.78	S123	100LB6	30000	11200

2.20 kW

n2 [rpm]	M2 [Nm]	fs	i	Gear reducer	Motor	Fr2 D [N]	Fr2 C-L [N]
331.6	59	Ex	8.63	S052	90L2	3106	3106
256.7	76	Ex	11.14	S052	90L2	3310	3310
209.4	93	Ex	13.66	S052	90L2	3471	3471
187.3	104	Ex	15.27	S052	90L2	3558	3558
182.5	111	2.2	8.00	S062	112MR4	6516	2606
177.5	114	2.1	8.00	S062	100LA4	6563	2625
175.6	111	Ex	16.29	S052	90L2	3607	3607
169.3	119	1.0	8.63	S052	112MR4	3611	3611
164.6	123	1.0	8.63	S052	100LA4	3631	3631
153.5	127	Ex	18.63	S052	90L2	3708	3708
153.0	132	2.0	9.55	S062	112MR4	6814	2726
148.8	136	1.9	9.55	S062	100LA4	6861	2744
146.3	133	Ex	19.55	S062	90L2	6920	2768
136.0	143	Ex	21.04	S052	90L2	3794	3794
130.8	156	2.5	7.34	S082	112M6	15160	4332
129.3	151	Ex	22.13	S082	90L2	15239	4354
126.7	161	2.5	7.34	S082	112MA6	15309	4374
124.7	162	1.7	11.71	S062	112MR4	7158	2863
123.4	158	Ex	23.18	S062	90L2	7212	2885
121.3	166	1.7	11.71	S062	100LA4	7204	2882
120.0	170	1.4	8.00	S062	112M6	7211	2885
119.2	163	Ex	24.00	S082	90L2	15625	4464
119.1	171	2.5	8.06	S082	112M6	15604	4458
118.8	164	Ex	24.07	S052	90L2	3884	3884
116.3	175	1.4	8.00	S062	112MA6	7264	2906
115.3	177	2.4	8.06	S082	112MA6	15756	4502
113.8	171	Ex	25.14	S062	90L2	7350	2940
110.9	175	Ex	25.79	S052	90L2	3928	3928
109.3	185	1.6	13.36	S062	112MR4	7377	2951
106.3	190	1.6	13.36	S062	100LA4	7423	2969
104.8	186	Ex	27.29	S082	90L2	16251	4643
103.4	188	Ex	27.66	S062	90L2	7511	3005
102.8	189	Ex	27.81	S052	90L2	3973	3973

5.1 S GEARED MOTORS (50Hz)

2.20 kW

n2 [rpm]	M2 [Nm]	fs	i	Gear reducer	Motor	Fr2 D [N]	Fr2 C-L [N]
100.6	203	1.3	9.55	S062	112M6	7501	3000
99.7	195	Ex	28.67	S082	90L2	16498	4714
97.4	209	1.2	9.55	S062	112MA6	7552	3021
96.5	211	2.2	9.94	S082	112M6	16631	4752
95.3	204	Ex	30.00	S062	90L2	7647	3059
93.5	218	2.2	9.94	S082	112MA6	16791	4797
91.6	220	1.5	15.94	S062	112MR4	7664	3066
90.0	216	Ex	31.78	S082	90L2	17019	4863
89.1	226	1.4	15.94	S062	100LA4	7708	3083
84.4	239	2.3	17.29	S082	112MR4	17324	4950
82.7	246	2.1	11.61	S082	112M6	17422	4978
82.1	246	2.3	17.29	S082	100LA4	17469	4991
82.0	248	1.1	11.71	S062	112M6	7823	3129
81.9	238	Ex	34.91	S082	90L2	17508	5002
80.1	254	2.0	11.61	S082	112MA6	17588	5025
79.4	256	1.1	11.71	S062	112MA6	7871	3148
78.2	249	Ex	36.57	S062	90L2	7968	3187
75.3	271	2.0	12.75	S082	112M6	17917	5119
75.3	271	2.7	12.75	S102	112M6	22000	6338
74.7	270	1.2	19.55	S062	112MR4	7980	3192
72.9	279	1.9	12.75	S082	112MA6	18000	5167
72.9	279	2.6	12.75	S102	112MA6	22000	6400
72.6	278	1.2	19.55	S062	100LA4	8021	3208
72.6	268	Ex	39.38	S062	90L2	8082	3233
72.5	278	2.0	20.14	S082	112MR4	18000	5179
71.9	283	1.1	13.36	S062	112M6	8018	3207
71.4	273	Ex	40.05	S082	90L2	18000	5212
70.5	286	1.9	20.14	S082	100LA4	18000	5222
69.6	293	1.0	13.36	S062	112MA6	8064	3225
66.4	293	Ex	43.05	S082	90L2	18000	5325
66.0	306	1.9	22.13	S082	112MR4	18000	5325
65.5	297	Ex	43.64	S062	90L2	8236	3294
64.2	314	1.8	22.13	S082	100LA4	18000	5369
63.0	320	1.1	23.18	S062	112MR4	8222	3289
62.0	314	Ex	46.10	S062	90L2	8314	3326
61.3	329	1.0	23.18	S062	100LA4	8259	3304
60.8	332	1.7	24.00	S082	112MR4	18000	5454
59.2	341	1.7	24.00	S082	100LA4	18000	5498
56.9	342	Ex	50.25	S082	90L2	18000	5572
55.8	365	2.6	17.21	S102	112M6	22000	6948
55.5	367	1.5	17.29	S082	112M6	18000	5597
54.0	377	2.5	17.21	S102	112MA6	22000	7016
53.8	379	1.5	17.29	S082	112MA6	18000	5649
53.5	377	1.7	27.29	S082	112MR4	18000	5660
53.4	364	Ex	53.53	S062	90L2	8515	3406

5.1 S GEARED MOTORS (50Hz)

2.20 kW

n2 [rpm]	M2 [Nm]	fs	i	Gear reducer	Motor	Fr2 D [N]	Fr2 C-L [N]
52.7	369	Ex	54.27	S082	90L2	18000	5698
52.0	374	Ex	55.00	S062	90L2	8549	3419
52.0	388	1.7	27.29	S082	100LA4	18000	5706
50.9	396	1.6	28.67	S082	112MR4	18000	5741
50.5	403	2.5	19.00	S102	112M6	22000	7159
49.5	407	1.6	28.67	S082	100LA4	18000	5787
48.9	416	2.4	19.00	S102	112MA6	22000	7228
48.9	413	2.6	29.87	S102	112MR4	22000	7234
47.7	427	1.3	20.14	S082	112M6	18000	5847
47.5	424	2.5	29.87	S102	100LA4	22000	7295
46.2	441	1.3	20.14	S082	112MA6	18000	5900
46.1	422	Ex	61.98	S082	90L2	18000	5919
45.9	439	1.9	31.78	S082	112MR4	18000	5912
45.1	448	2.9	32.40	S102	112MR4	22000	7414
44.7	451	1.9	31.78	S082	100LA4	18000	5959
43.8	460	2.8	32.40	S102	100LA4	22000	7476
43.4	469	1.2	22.13	S082	112M6	18000	6004
43.4	469	2.2	22.13	S102	112M6	22000	7495
42.4	450	Ex	67.52	S083	90L2	18000	6074
42.0	485	1.2	22.13	S082	112MA6	18000	6058
42.0	485	2.1	22.13	S102	112MA6	22000	7566
41.8	482	1.8	34.91	S082	112MR4	18000	6071
41.8	482	2.5	34.91	S102	112MR4	22000	7581
40.7	496	1.7	34.91	S082	100LA4	18000	6118
40.7	496	2.4	34.91	S102	100LA4	22000	7644
40.0	509	1.1	24.00	S082	112M6	18000	6142
39.9	505	1.0	36.57	S062	112MR4	8714	3486
39.5	515	2.1	24.28	S102	112M6	22000	7705
38.8	526	1.1	24.00	S082	112MA6	18000	6196
38.6	494	Ex	74.18	S083	90L2	18000	6237
38.3	532	2.0	24.28	S102	112MA6	22000	7777
38.1	529	2.4	38.30	S102	112MR4	22000	7793
37.1	544	2.4	38.30	S102	100LA4	22000	7857
36.5	553	1.5	40.05	S082	112MR4	18000	6307
36.5	559	1.9	26.33	S102	112M6	22000	7892
35.5	569	1.5	40.05	S082	100LA4	18000	6355
35.3	577	1.9	26.33	S102	112MA6	22000	7966
35.2	579	1.1	27.29	S082	112M6	18000	6363
34.1	598	1.1	27.29	S082	112MA6	18000	6418
33.9	595	1.4	43.05	S082	112MR4	18000	6433
33.5	608	1.1	28.67	S082	112M6	18000	6449
33.2	608	1.8	44.00	S102	112MR4	22000	8118
33.0	612	1.4	43.05	S082	100LA4	18000	6481
32.4	628	1.0	28.67	S082	112MA6	18000	6505
32.3	625	1.8	44.00	S102	100LA4	22000	8184

5.1 S GEARED MOTORS (50Hz)

2.20 kW

n2 [rpm]	M2 [Nm]	fs	i	Gear reducer	Motor	Fr2 D [N]	Fr2 C-L [N]
32.1	634	1.7	29.87	S102	112M6	22000	8189
31.3	610	Ex	91.49	S083	90L2	18000	6609
31.1	654	1.7	29.87	S102	112MA6	22000	8265
31.0	651	2.1	47.13	S102	112MR4	22000	8282
30.2	674	1.3	31.78	S082	112M6	18000	6630
30.1	669	2.0	47.13	S102	100LA4	22000	8349
29.8	677	3.0	49.04	S122	112MR4	30000	11200
29.6	688	1.9	32.40	S102	112M6	22000	8385
29.3	696	1.2	31.78	S082	112MA6	18000	6686
29.1	694	1.2	50.25	S082	112MR4	18000	6705
29.0	697	2.9	49.04	S122	100LA4	30000	11200
28.7	710	1.8	32.40	S102	112MA6	22000	8462
28.3	714	1.2	50.25	S082	100LA4	18000	6755
27.5	741	1.1	34.91	S082	112M6	18000	6796
27.5	741	1.6	34.91	S102	112M6	22000	8567
27.2	743	3.0	53.75	S122	112MR4	30000	11200
26.9	750	1.1	54.27	S082	112MR4	18000	6842
26.6	765	1.1	34.91	S082	112MA6	18000	6853
26.6	765	1.6	34.91	S102	112MA6	22000	8645
26.5	762	1.5	55.14	S102	112MR4	22000	8666
26.4	763	2.9	53.75	S122	100LA4	30000	11200
26.2	771	1.1	54.27	S082	100LA4	18000	6892
25.8	783	1.4	55.14	S102	100LA4	22000	8735
25.1	813	1.6	38.30	S102	112M6	22000	8797
24.6	821	1.7	59.40	S102	112MR4	22000	8852
24.3	839	1.5	38.30	S102	112MA6	22000	8877
24.0	850	1.0	40.05	S082	112M6	18000	7041
23.9	844	1.6	59.40	S102	100LA4	22000	8922
23.4	871	2.9	41.07	S122	112M6	30000	11200
22.6	900	2.8	41.07	S122	112MA6	30000	11200
22.1	912	2.8	66.00	S122	112MR4	30000	11200
22.0	925	2.8	43.60	S122	112M6	30000	11200
21.8	934	1.2	44.00	S102	112M6	22000	9000
21.5	937	1.5	67.84	S102	112MR4	22000	9000
21.5	937	2.7	66.00	S122	100LA4	30000	11200
21.3	955	2.7	43.60	S122	112MA6	30000	11200
21.1	964	1.2	44.00	S102	112MA6	22000	9000
20.9	964	1.4	67.84	S102	100LA4	22000	9000
20.5	961	2.4	71.07	S123	112MR4	30000	11200
20.4	1000	1.4	47.13	S102	112M6	22000	9000
20.0	988	2.3	71.07	S123	100LA4	30000	11200
19.7	1032	1.3	47.13	S102	112MA6	22000	9000
19.7	1003	1.4	74.18	S103	112MR4	22000	9000
19.6	1041	2.0	49.04	S122	112M6	30000	11200
19.1	1032	1.3	74.18	S103	100LA4	22000	9000

5.1 S GEARED MOTORS (50Hz)

2.20 kW

n2 [rpm]	M2 [Nm]	fs	i	Gear reducer	Motor	Fr2 D [N]	Fr2 C-L [N]
19.0	1074	1.9	49.04	S122	112MA6	30000	11200
17.9	1101	1.2	81.39	S103	112MR4	22000	9000
17.9	1141	1.9	53.75	S122	112M6	30000	11200
17.4	1132	1.2	81.39	S103	100LA4	22000	9000
17.3	1177	1.9	53.75	S122	112MA6	30000	11200
16.7	1180	2.2	87.27	S123	112MR4	30000	11200
16.3	1214	2.1	87.27	S123	100LA4	30000	11200
16.2	1260	1.1	59.40	S102	112M6	22000	9000
15.7	1301	1.0	59.40	S102	112MA6	22000	9000
14.6	1355	1.0	100.15	S103	112MR4	22000	9000
14.5	1401	1.8	66.00	S122	112M6	30000	11200
14.1	1446	1.8	66.00	S122	112MA6	30000	11200
13.5	1477	1.6	71.07	S123	112M6	30000	11200
13.1	1524	1.5	71.07	S123	112MA6	30000	11200
13.0	1522	1.7	112.52	S123	112MR4	30000	11200
12.6	1565	1.6	112.52	S123	100LA4	30000	11200
11.8	1668	1.5	123.33	S123	112MR4	30000	11200
11.5	1715	1.5	123.33	S123	100LA4	30000	11200
11.0	1813	1.4	87.27	S123	112M6	30000	11200
10.9	1810	1.4	133.78	S123	112MR4	30000	11200
10.7	1872	1.4	87.27	S123	112MA6	30000	11200
10.6	1861	1.4	133.78	S123	100LA4	30000	11200
9.6	2048	1.2	151.43	S123	112MR4	30000	11200
9.4	2106	1.2	151.43	S123	100LA4	30000	11200
8.5	2338	1.1	112.52	S123	112M6	30000	11200
8.3	2413	1.1	112.52	S123	112MA6	30000	11200
8.2	2401	1.1	177.53	S123	112MR4	30000	11200
8.0	2469	1.0	177.53	S123	100LA4	30000	11200

3.00 kW

n2 [rpm]	M2 [Nm]	fs	i	Gear reducer	Motor	Fr2 D [N]	Fr2 C-L [N]
336.2	79	Ex	8.63	S052	100L2	2972	2972
332.8	80	Ex	8.63	S052	100LA2	2979	2979
260.3	102	Ex	11.14	S052	100L2	3141	3141
257.6	103	Ex	11.14	S052	100LA2	3148	3148
212.4	125	Ex	13.66	S052	100L2	3267	3267
210.2	126	Ex	13.66	S052	100LA2	3273	3273
197.6	139	2.8	7.34	S082	112MS4	13221	3777
193.5	142	2.8	7.34	S082	100LB4	13306	3802
189.9	140	Ex	15.27	S052	100L2	3331	3331
187.9	141	Ex	15.27	S052	100LA2	3337	3337
181.3	152	1.6	8.00	S062	112MS4	6271	2508
179.8	153	2.8	8.06	S082	112MS4	13607	3888

5.1 S GEARED MOTORS (50Hz)

3.00 kW

n2 [rpm]	M2 [Nm]	fs	i	Gear reducer	Motor	Fr2 D [N]	Fr2 C-L [N]
178.1	149	Ex	16.29	S052	100L2	3366	3366
177.5	155	1.5	8.00	S062	100LB4	6301	2520
176.2	151	Ex	16.29	S052	100LA2	3371	3371
176.1	156	2.8	8.06	S082	100LB4	13694	3912
167.7	158	Ex	17.29	S082	100L2	13919	3977
165.9	160	Ex	17.29	S082	100LA2	13963	3989
151.9	181	1.4	9.55	S062	112MS4	6519	2608
148.8	185	1.4	9.55	S062	100LB4	6548	2619
148.3	179	Ex	19.55	S062	100L2	6593	2637
146.8	181	Ex	19.55	S062	100LA2	6608	2643
145.8	189	2.5	9.94	S082	112MS4	14500	4143
144.0	184	Ex	20.14	S082	100L2	14577	4165
142.8	193	2.4	9.94	S082	100LB4	14592	4169
142.5	186	Ex	20.14	S082	100LA2	14623	4178
132.2	210	1.9	7.34	S082	132S6	14928	4265
131.1	202	Ex	22.13	S082	100L2	14996	4285
130.8	212	1.9	7.34	S082	132SA6	14974	4278
129.7	205	Ex	22.13	S082	100LA2	15043	4298
126.7	219	1.8	7.34	S082	112MB6	15117	4319
125.1	212	Ex	23.18	S062	100L2	6829	2732
124.9	220	2.3	11.61	S082	112MS4	15188	4339
123.8	222	1.3	11.71	S062	112MS4	6794	2718
123.8	214	Ex	23.18	S062	100LA2	6843	2737
122.4	225	2.2	11.61	S082	100LB4	15283	4367
121.3	227	1.2	11.71	S062	100LB4	6821	2728
120.8	220	Ex	24.00	S082	100L2	15366	4390
120.3	231	1.9	8.06	S082	132S6	15352	4386
120.3	231	2.6	8.06	S102	132S6	19006	5430
119.6	222	Ex	24.00	S082	100LA2	15414	4404
119.1	233	1.9	8.06	S082	132SA6	15399	4400
119.1	233	2.6	8.06	S102	132SA6	19067	5448
115.3	230	Ex	25.14	S062	100L2	6938	2775
115.3	241	1.8	8.06	S082	112MB6	15545	4441
115.3	241	2.5	8.06	S102	112MB6	19255	5501
114.1	233	Ex	25.14	S062	100LA2	6951	2781
113.7	242	2.2	12.75	S082	112MS4	15618	4462
111.4	247	2.2	12.75	S082	100LB4	15715	4490
109.6	253	2.6	8.85	S102	132S6	19557	5588
108.6	253	1.2	13.36	S062	112MS4	6960	2784
108.5	256	2.5	8.85	S102	132SA6	19620	5606
106.3	259	1.2	13.36	S062	100LB4	6985	2794
106.3	250	Ex	27.29	S082	100L2	15963	4561
105.2	252	Ex	27.29	S082	100LA2	16012	4575
105.1	264	2.5	8.85	S102	112MB6	19812	5661
104.9	253	Ex	27.66	S062	100L2	7060	2824

5.1 S GEARED MOTORS (50Hz)

3.00 kW

n2 [rpm]	M2 [Nm]	fs	i	Gear reducer	Motor	Fr2 D [N]	Fr2 C-L [N]
103.8	256	Ex	27.66	S062	100LA2	7073	2829
101.1	262	Ex	28.67	S082	100L2	16198	4628
100.1	265	Ex	28.67	S082	100LA2	16248	4642
97.5	285	1.7	9.94	S082	132S6	16330	4666
96.7	275	Ex	30.00	S062	100L2	7160	2864
96.5	288	1.6	9.94	S082	132SA6	16379	4680
95.7	277	Ex	30.00	S062	100LA2	7172	2869
93.5	297	1.6	9.94	S082	112MB6	16531	4723
91.3	291	Ex	31.78	S082	100L2	16693	4770
91.0	302	1.1	15.94	S062	112MS4	7164	2866
90.3	294	Ex	31.78	S082	100LA2	16744	4784
89.1	309	1.0	15.94	S062	100LB4	7186	2875
89.1	312	2.2	10.88	S102	132S6	20837	5954
88.2	315	2.2	10.88	S102	132SA6	20903	5972
85.4	325	2.1	10.88	S102	112MB6	21106	6030
84.2	326	2.9	17.21	S102	112MS4	21205	6059
83.8	328	1.7	17.29	S082	112MS4	17072	4878
83.6	332	1.5	11.61	S082	132S6	17077	4879
83.1	319	Ex	34.91	S082	100L2	17155	4902
82.7	336	1.5	11.61	S082	132SA6	17128	4894
82.5	333	2.8	17.21	S102	100LB4	21340	6097
82.2	323	Ex	34.91	S082	100LA2	17207	4916
82.1	335	1.7	17.29	S082	100LB4	17175	4907
80.1	347	1.5	11.61	S082	112MB6	17284	4938
79.3	335	Ex	36.57	S062	100L2	7380	2952
78.5	338	Ex	36.57	S062	100LA2	7390	2956
76.3	360	2.8	19.00	S102	112MS4	21848	6242
76.1	365	1.5	12.75	S082	132S6	17542	5012
76.1	365	2.0	12.75	S102	132S6	21859	6245
75.3	369	1.5	12.75	S082	132SA6	17593	5027
75.3	369	2.0	12.75	S102	132SA6	21927	6265
74.7	368	2.7	19.00	S102	100LB4	21986	6282
73.7	360	Ex	39.38	S062	100L2	7452	2981
72.9	364	Ex	39.38	S062	100LA2	7461	2985
72.9	381	1.4	12.75	S082	112MB6	17752	5072
72.9	381	1.9	12.75	S102	112MB6	22000	6325
72.4	367	Ex	40.05	S082	100L2	17845	5099
72.0	382	1.5	20.14	S082	112MS4	17830	5094
71.7	370	Ex	40.05	S082	100LA2	17898	5114
70.5	390	1.4	20.14	S082	100LB4	17936	5125
69.3	401	2.2	13.99	S102	132S6	22000	6422
68.6	405	2.1	13.99	S102	132SA6	22000	6442
67.4	394	Ex	43.05	S082	100L2	18000	5204
66.7	398	Ex	43.05	S082	100LA2	18000	5220
66.5	399	Ex	43.64	S062	100L2	7540	3016

5.1 S GEARED MOTORS (50Hz)

3.00 kW

n2 [rpm]	M2 [Nm]	fs	i	Gear reducer	Motor	Fr2 D [N]	Fr2 C-L [N]
66.5	418	2.1	13.99	S102	112MB6	22000	6503
65.8	404	Ex	43.64	S062	100LA2	7549	3019
65.5	420	1.4	22.13	S082	112MS4	18000	5231
65.5	420	2.4	22.13	S102	112MS4	22000	6534
64.2	429	1.3	22.13	S082	100LB4	18000	5261
64.2	429	2.4	22.13	S102	100LB4	22000	6575
60.4	455	1.3	24.00	S082	112MS4	18000	5351
59.7	460	2.3	24.28	S102	112MS4	22000	6716
59.2	465	1.2	24.00	S082	100LB4	18000	5381
58.5	470	2.3	24.28	S102	100LB4	22000	6758
57.7	460	Ex	50.25	S082	100L2	18000	5434
57.1	465	Ex	50.25	S082	100LA2	18000	5450
56.4	493	1.9	17.21	S102	132S6	22000	6829
56.1	495	1.1	17.29	S082	132S6	18000	5456
55.8	498	1.9	17.21	S102	132SA6	22000	6850
55.5	500	1.1	17.29	S082	132SA6	18000	5472
55.1	499	2.2	26.33	S102	112MS4	22000	6879
54.0	514	1.8	17.21	S102	112MB6	22000	6914
53.9	510	2.1	26.33	S102	100LB4	22000	6922
53.8	517	1.1	17.29	S082	112MB6	18000	5519
53.4	497	Ex	54.27	S082	100L2	18000	5550
53.1	518	1.3	27.29	S082	112MS4	18000	5542
52.9	502	Ex	54.27	S082	100LA2	18000	5566
52.0	529	1.2	27.29	S082	100LB4	18000	5573
51.1	544	1.9	19.00	S102	132S6	22000	7029
50.6	544	1.2	28.67	S082	112MS4	18000	5617
50.5	550	1.8	19.00	S102	132SA6	22000	7051
49.5	555	1.2	28.67	S082	100LB4	18000	5648
48.9	568	1.8	19.00	S102	112MB6	22000	7116
48.5	567	1.9	29.87	S102	112MS4	22000	7137
47.5	579	1.9	29.87	S102	100LB4	22000	7181
46.8	567	Ex	61.98	S082	100L2	18000	5754
46.3	573	Ex	61.98	S082	100LA2	18000	5770
45.6	603	1.4	31.78	S082	112MS4	18000	5773
44.8	615	2.1	32.40	S102	112MS4	22000	7307
44.7	615	1.4	31.78	S082	100LB4	18000	5805
43.8	634	1.6	22.13	S102	132S6	22000	7346
43.8	628	2.0	32.40	S102	100LB4	22000	7352
43.4	640	1.6	22.13	S102	132SA6	22000	7368
42.9	605	Ex	67.52	S083	100L2	18000	5899
42.5	611	Ex	67.52	S083	100LA2	18000	5915
42.0	661	1.5	22.13	S102	112MB6	22000	7435
41.5	662	1.3	34.91	S082	112MS4	18000	5917
41.5	662	1.8	34.91	S102	112MS4	22000	7466
40.7	676	1.3	34.91	S082	100LB4	18000	5949

5.1 S GEARED MOTORS (50Hz)

3.00 kW

n2 [rpm]	M2 [Nm]	fs	i	Gear reducer	Motor	Fr2 D [N]	Fr2 C-L [N]
40.7	676	1.8	34.91	S102	100LB4	22000	7510
40.0	695	1.6	24.28	S102	132S6	22000	7543
39.5	702	1.5	24.28	S102	132SA6	22000	7566
39.1	665	Ex	74.18	S083	100L2	18000	6046
38.7	672	Ex	74.18	S083	100LA2	18000	6063
38.3	725	1.5	24.28	S102	112MB6	22000	7634
37.9	727	1.8	38.30	S102	112MS4	22000	7665
37.1	742	1.7	38.30	S102	100LB4	22000	7711
36.8	754	1.4	26.33	S102	132S6	22000	7719
36.5	762	1.4	26.33	S102	132SA6	22000	7742
36.2	760	1.1	40.05	S082	112MS4	18000	6129
35.5	776	1.1	40.05	S082	100LB4	18000	6161
35.3	787	1.4	26.33	S102	112MB6	22000	7811
35.3	779	3.3	41.07	S122	112MS4	30000	11167
34.6	795	3.2	41.07	S122	100LB4	30000	11200
33.9	819	2.6	28.60	S122	132S6	30000	11200
33.7	817	1.0	43.05	S082	112MS4	18000	6240
33.6	828	2.6	28.60	S122	132SA6	30000	11200
33.3	827	3.1	43.60	S122	112MS4	30000	11200
33.0	834	1.0	43.05	S082	100LB4	18000	6273
33.0	835	1.3	44.00	S102	112MS4	22000	7969
32.6	844	3.0	43.60	S122	100LB4	30000	11200
32.5	855	1.3	29.87	S102	132S6	22000	7995
32.5	854	2.5	28.60	S122	112MB6	30000	11200
32.3	852	1.3	44.00	S102	100LB4	22000	8016
32.1	864	1.2	29.87	S102	132SA6	22000	8018
31.8	874	2.9	30.51	S122	132S6	30000	11200
31.5	883	2.9	30.51	S122	132SA6	30000	11200
31.1	892	1.2	29.87	S102	112MB6	22000	8089
30.8	894	1.5	47.13	S102	112MS4	22000	8122
30.5	911	2.8	30.51	S122	112MB6	30000	11200
30.1	913	1.5	47.13	S102	100LB4	22000	8169
29.9	928	1.4	32.40	S102	132S6	22000	8176
29.6	938	1.4	32.40	S102	132SA6	22000	8200
29.6	930	2.2	49.04	S122	112MS4	30000	11200
29.0	958	2.7	33.44	S122	132S6	30000	11200
29.0	950	2.2	49.04	S122	100LB4	30000	11200
28.7	968	1.3	32.40	S102	112MB6	22000	8271
28.7	968	2.6	33.44	S122	132SA6	30000	11200
27.8	1000	1.2	34.91	S102	132S6	22000	8344
27.8	999	2.6	33.44	S122	112MB6	30000	11200
27.6	1008	2.5	35.20	S122	132S6	30000	11200
27.5	1010	1.2	34.91	S102	132SA6	22000	8367
27.3	1019	2.5	35.20	S122	132SA6	30000	11200
27.0	1020	2.2	53.75	S122	112MS4	30000	11200

5.1 S GEARED MOTORS (50Hz)

3.00 kW

n2 [rpm]	M2 [Nm]	fs	i	Gear reducer	Motor	Fr2 D [N]	Fr2 C-L [N]
26.6	1043	1.1	34.91	S102	112MB6	22000	8439
26.4	1051	2.4	35.20	S122	112MB6	30000	11200
26.4	1041	2.1	53.75	S122	100LB4	30000	11200
26.3	1046	1.1	55.14	S102	112MS4	22000	8476
25.8	1068	1.0	55.14	S102	100LB4	22000	8524
25.3	1097	1.2	38.30	S102	132S6	22000	8554
25.1	1108	1.2	38.30	S102	132SA6	22000	8578
24.4	1127	1.2	59.40	S102	112MS4	22000	8647
24.3	1144	1.1	38.30	S102	112MB6	22000	8651
23.9	1151	1.2	59.40	S102	100LB4	22000	8695
23.6	1176	2.2	41.07	S122	132S6	30000	11200
23.4	1188	2.2	41.07	S122	132SA6	30000	11200
22.6	1227	2.1	41.07	S122	112MB6	30000	11200
22.2	1249	2.1	43.60	S122	132S6	30000	11200
22.0	1262	2.0	43.60	S122	132SA6	30000	11200
22.0	1252	2.0	66.00	S122	112MS4	30000	11200
21.5	1278	2.0	66.00	S122	100LB4	30000	11200
21.4	1287	1.1	67.84	S102	112MS4	22000	8953
21.3	1302	2.0	43.60	S122	112MB6	30000	11200
20.9	1314	1.0	67.84	S102	100LB4	22000	9000
20.6	1350	1.0	47.13	S102	132S6	22000	9000
20.4	1364	1.0	47.13	S102	132SA6	22000	9000
20.4	1320	1.7	71.07	S123	112MS4	30000	11200
20.0	1348	1.7	71.07	S123	100LB4	30000	11200
19.8	1404	1.5	49.04	S122	132S6	30000	11200
19.6	1419	1.4	49.04	S122	132SA6	30000	11200
19.0	1465	1.4	49.04	S122	112MB6	30000	11200
18.0	1539	1.4	53.75	S122	132S6	30000	11200
17.9	1555	1.4	53.75	S122	132SA6	30000	11200
17.3	1606	1.4	53.75	S122	112MB6	30000	11200
16.6	1621	1.6	87.27	S123	112MS4	30000	11200
16.3	1655	1.5	87.27	S123	100LB4	30000	11200
14.7	1890	1.4	66.00	S122	132S6	30000	11200
14.5	1910	1.3	66.00	S122	132SA6	30000	11200
14.1	1971	1.3	66.00	S122	112MB6	30000	11200
13.6	1993	1.2	71.07	S123	132S6	30000	11200
13.5	2014	1.1	71.07	S123	132SA6	30000	11200
13.1	2079	1.1	71.07	S123	112MB6	30000	11200
12.9	2090	1.2	112.52	S123	112MS4	30000	11200
12.6	2134	1.2	112.52	S123	100LB4	30000	11200
11.8	2291	1.1	123.33	S123	112MS4	30000	11200
11.5	2339	1.1	123.33	S123	100LB4	30000	11200
11.1	2447	1.0	87.27	S123	132S6	30000	11200
11.0	2473	1.0	87.27	S123	132SA6	30000	11200
10.8	2485	1.0	133.78	S123	112MS4	30000	11200

5.1 S GEARED MOTORS (50Hz)

3.00 kW

n2 [rpm]	M2 [Nm]	fs	i	Gear reducer	Motor	Fr2 D [N]	Fr2 C-L [N]
10.7	2552	1.0	87.27	S123	112MB6	30000	11200
10.6	2537	1.0	133.78	S123	100LB4	30000	11200

4.00 kW

n2 [rpm]	M2 [Nm]	fs	i	Gear reducer	Motor	Fr2 D [N]	Fr2 C-L [N]
339.7	104	Ex	8.63	S052	112M2	2814	2814
336.2	105	Ex	8.63	S052	112MA2	2820	2820
332.8	106	Ex	8.63	S052	100LB2	2825	2825
197.6	186	2.1	7.34	S082	112M4	13068	3734
196.2	187	2.1	7.34	S082	112MA4	13095	3741
181.3	202	1.2	8.00	S062	112M4	5950	2380
180.0	204	1.2	8.00	S062	112MA4	5958	2383
179.8	204	2.1	8.06	S082	112M4	13439	3840
178.6	205	2.1	8.06	S082	112MA4	13467	3848
169.4	209	Ex	17.29	S082	112M2	13704	3915
167.7	211	Ex	17.29	S082	112MA2	13746	3927
165.9	213	Ex	17.29	S082	100LB2	13788	3939
162.8	225	2.9	8.85	S102	112MA4	17159	4903
151.9	241	1.1	9.55	S062	112M4	6137	2455
150.9	243	1.1	9.55	S062	112MA4	6144	2458
149.9	236	Ex	19.55	S062	112M2	6205	2482
148.3	239	Ex	19.55	S062	112MA2	6215	2486
146.8	241	Ex	19.55	S062	100LB2	6226	2490
145.8	251	1.9	9.94	S082	112M4	14294	4084
145.5	243	Ex	20.14	S082	112M2	14332	4095
144.8	253	1.9	9.94	S082	112MA4	14323	4092
144.0	246	Ex	20.14	S082	112MA2	14376	4107
142.5	248	Ex	20.14	S082	100LB2	14419	4120
133.2	275	2.5	10.88	S102	112M4	18243	5212
132.4	267	Ex	22.13	S082	112M2	14731	4209
132.3	277	2.5	10.88	S102	112MA4	18281	5223
131.1	270	Ex	22.13	S082	112MA2	14775	4221
130.8	283	1.4	7.34	S082	132MA6	14742	4212
129.7	273	Ex	22.13	S082	100LB2	14819	4234
126.4	280	Ex	23.18	S062	112M2	6372	2549
125.1	283	Ex	23.18	S062	112MA2	6381	2552
124.9	294	1.7	11.61	S082	112M4	14947	4271
124.1	296	1.7	11.61	S082	112MA4	14977	4279
123.8	286	Ex	23.18	S062	100LB2	6391	2556
122.1	290	Ex	24.00	S082	112M2	15081	4309
120.8	293	Ex	24.00	S082	112MA2	15125	4322
119.6	296	Ex	24.00	S082	100LB2	15171	4334
119.1	311	1.4	8.06	S082	132MA6	15144	4327

5.1 S GEARED MOTORS (50Hz)

4.00 kW

n2 [rpm]	M2 [Nm]	fs	i	Gear reducer	Motor	Fr2 D [N]	Fr2 C-L [N]
119.1	311	2.0	8.06	S102	132MA6	18865	5390
116.5	304	Ex	25.14	S062	112M2	6443	2577
115.3	307	Ex	25.14	S062	112MA2	6452	2581
114.1	310	Ex	25.14	S062	100LB2	6460	2584
113.7	322	1.7	12.75	S082	112M4	15353	4387
113.7	322	2.2	12.75	S102	112M4	19136	5467
112.9	325	1.7	12.75	S082	112MA4	15384	4395
112.9	325	2.2	12.75	S102	112MA4	19176	5479
108.5	341	1.9	8.85	S102	132MA6	19398	5542
107.4	330	Ex	27.29	S082	112M2	15644	4470
106.3	333	Ex	27.29	S082	112MA2	15690	4483
105.2	336	Ex	27.29	S082	100LB2	15736	4496
103.6	354	2.4	13.99	S102	112M4	19676	5622
102.9	356	2.4	13.99	S102	112MA4	19716	5633
102.2	346	Ex	28.67	S082	112M2	15865	4533
101.1	350	Ex	28.67	S082	112MA2	15911	4546
100.1	354	Ex	28.67	S082	100LB2	15958	4559
96.5	384	1.2	9.94	S082	132MA6	16064	4590
92.2	384	Ex	31.78	S082	112M2	16328	4665
91.3	388	Ex	31.78	S082	112MA2	16375	4679
90.3	392	Ex	31.78	S082	100LB2	16422	4692
88.2	420	1.6	10.88	S102	132MA6	20631	5894
84.2	435	2.2	17.21	S102	112M4	20922	5978
83.9	422	Ex	34.91	S082	112M2	16758	4788
83.8	437	1.3	17.29	S082	112M4	16713	4775
83.7	438	2.1	17.21	S102	112MA4	20965	5990
83.3	440	1.3	17.29	S082	112MA4	16744	4784
83.1	426	Ex	34.91	S082	112MA2	16806	4802
82.7	448	1.1	11.61	S082	132MA6	16760	4789
82.2	430	Ex	34.91	S082	100LB2	16854	4815
76.3	481	2.1	19.00	S102	112M4	21536	6153
75.8	484	2.1	19.00	S102	112MA4	21579	6166
75.3	492	1.1	12.75	S082	132MA6	17189	4911
75.3	492	1.5	12.75	S102	132MA6	21608	6174
73.2	484	Ex	40.05	S082	112M2	17396	4970
72.4	489	Ex	40.05	S082	112MA2	17444	4984
72.0	509	1.1	20.14	S082	112M4	17412	4975
71.7	494	Ex	40.05	S082	100LB2	17493	4998
71.5	513	1.1	20.14	S082	112MA4	17444	4984
68.6	540	1.6	13.99	S102	132MA6	22000	6342
68.1	520	Ex	43.05	S082	112M2	17735	5067
67.4	525	Ex	43.05	S082	112MA2	17784	5081
66.7	531	Ex	43.05	S082	100LB2	17833	5095
65.5	560	1.0	22.13	S082	112M4	17848	5100
65.5	560	1.8	22.13	S102	112M4	22000	6430

5.1 S GEARED MOTORS (50Hz)

4.00 kW

n2 [rpm]	M2 [Nm]	fs	i	Gear reducer	Motor	Fr2 D [N]	Fr2 C-L [N]
65.1	563	1.0	22.13	S082	112MA4	17881	5109
65.1	563	1.8	22.13	S102	112MA4	22000	6443
59.7	614	1.8	24.28	S102	112M4	22000	6602
59.3	618	1.7	24.28	S102	112MA4	22000	6615
58.3	607	Ex	50.25	S082	112M2	18000	5276
57.7	613	Ex	50.25	S082	112MA2	18000	5290
57.1	620	Ex	50.25	S082	100LB2	18000	5304
55.8	664	1.4	17.21	S102	132MA6	22000	6727
55.1	666	1.6	26.33	S102	112M4	22000	6756
54.7	671	1.6	26.33	S102	112MA4	22000	6769
54.0	655	Ex	54.27	S082	112M2	18000	5381
53.4	662	Ex	54.27	S082	112MA2	18000	5395
52.9	669	Ex	54.27	S082	100LB2	18000	5409
50.5	733	1.4	19.00	S102	132MA6	22000	6915
48.5	755	1.4	29.87	S102	112M4	22000	6997
48.2	761	1.4	29.87	S102	112MA4	22000	7011
47.5	772	3.3	30.51	S122	112M4	30000	10053
47.2	777	3.3	30.51	S122	112MA4	30000	10072
45.6	804	1.1	31.78	S082	112M4	18000	5584
45.3	809	1.1	31.78	S082	112MA4	18000	5593
45.2	820	2.5	21.25	S122	132MA6	30000	10184
44.8	819	1.6	32.40	S102	112M4	22000	7155
44.4	825	1.6	32.40	S102	112MA4	22000	7169
43.4	854	1.2	22.13	S102	132MA6	22000	7210
43.4	846	3.0	33.44	S122	112M4	30000	10308
43.1	852	3.0	33.44	S122	112MA4	30000	10327
41.5	883	1.4	34.91	S102	112M4	22000	7302
41.3	889	1.3	34.91	S102	112MA4	22000	7316
41.2	899	2.3	23.29	S122	132MA6	30000	10439
41.2	890	2.9	35.20	S122	112M4	30000	10451
40.9	896	2.9	35.20	S122	112MA4	30000	10470
39.5	937	1.2	24.28	S102	132MA6	22000	7392
37.9	969	1.3	38.30	S102	112M4	22000	7486
37.6	975	1.3	38.30	S102	112MA4	22000	7499
36.7	1009	2.1	26.15	S122	132MA6	30000	10765
36.5	1016	1.1	26.33	S102	132MA6	22000	7553
35.3	1039	2.5	41.07	S122	112M4	30000	10886
35.1	1046	2.4	41.07	S122	112MA4	30000	10905
33.6	1103	2.0	28.60	S122	132MA6	30000	11018
33.3	1103	2.3	43.60	S122	112M4	30000	11056
33.0	1110	2.3	43.60	S122	112MA4	30000	11075
31.5	1177	2.2	30.51	S122	132MA6	30000	11200
30.8	1192	1.1	47.13	S102	112M4	22000	7901
30.6	1200	1.1	47.13	S102	112MA4	22000	7915
29.6	1250	1.0	32.40	S102	132MA6	22000	7968

5.1 S GEARED MOTORS (50Hz)

4.00 kW

n2 [rpm]	M2 [Nm]	fs	i	Gear reducer	Motor	Fr2 D [N]	Fr2 C-L [N]
29.6	1240	1.7	49.04	S122	112M4	30000	11200
29.4	1249	1.6	49.04	S122	112MA4	30000	11200
28.7	1290	2.0	33.44	S122	132MA6	30000	11200
27.3	1358	1.9	35.20	S122	132MA6	30000	11200
27.0	1359	1.6	53.75	S122	112M4	30000	11200
26.8	1369	1.6	53.75	S122	112MA4	30000	11200
23.4	1584	1.6	41.07	S122	132MA6	30000	11200
22.0	1682	1.5	43.60	S122	132MA6	30000	11200
22.0	1669	1.5	66.00	S122	112M4	30000	11200
21.8	1681	1.5	66.00	S122	112MA4	30000	11200
20.4	1760	1.3	71.07	S123	112M4	30000	11200
20.3	1772	1.3	71.07	S123	112MA4	30000	11200
19.6	1892	1.1	49.04	S122	132MA6	30000	11200
17.9	2074	1.1	53.75	S122	132MA6	30000	11200
16.6	2161	1.2	87.27	S123	112M4	30000	11200
16.5	2176	1.2	87.27	S123	112MA4	30000	11200
14.5	2546	1.0	66.00	S122	132MA6	30000	11200

4.80 kW

n2 [rpm]	M2 [Nm]	fs	i	Gear reducer	Motor	Fr2 D [N]	Fr2 C-L [N]
194.9	226	1.8	7.34	S082	112MB4	12999	3714
177.4	248	1.7	8.06	S082	112MB4	13359	3817
177.4	248	2.5	8.06	S102	112MB4	16604	4744
161.6	272	2.4	8.85	S102	112MB4	17078	4879
143.8	306	1.5	9.94	S082	112MB4	14184	4053
131.4	335	2.0	10.88	S102	112MB4	18175	5193
123.2	357	1.4	11.61	S082	112MB4	14811	4232
112.2	392	1.4	12.75	S082	112MB4	15199	4343
112.2	392	1.8	12.75	S102	112MB4	19046	5442
102.2	431	2.0	13.99	S102	112MB4	19571	5592
83.1	530	1.8	17.21	S102	112MB4	20779	5937
82.7	532	1.0	17.29	S082	112MB4	16485	4710
75.3	585	1.7	19.00	S102	112MB4	21370	6106
64.6	681	1.5	22.13	S102	112MB4	22000	6371
58.9	747	1.4	24.28	S102	112MB4	22000	6536
54.7	805	2.7	26.15	S122	112MB4	30000	9525
54.3	810	1.3	26.33	S102	112MB4	22000	6682
50.0	880	2.5	28.60	S122	112MB4	30000	9755
47.9	919	1.2	29.87	S102	112MB4	22000	6911
46.9	939	2.7	30.51	S122	112MB4	30000	9922
44.1	997	1.3	32.40	S102	112MB4	22000	7059
42.8	1029	2.5	33.44	S122	112MB4	30000	10161
41.0	1074	1.1	34.91	S102	112MB4	22000	7197

5.1 S GEARED MOTORS (50Hz)

4.80 kW

n2 [rpm]	M2 [Nm]	fs	i	Gear reducer	Motor	Fr2 D [N]	Fr2 C-L [N]
40.6	1083	2.4	35.20	S122	112MB4	30000	10294
37.3	1179	1.1	38.30	S102	112MB4	22000	7368
34.8	1264	2.0	41.07	S122	112MB4	30000	10697
32.8	1342	1.9	43.60	S122	112MB4	30000	10853
29.2	1509	1.4	49.04	S122	112MB4	30000	11159
26.6	1654	1.3	53.75	S122	112MB4	30000	11200
21.7	2031	1.3	66.00	S122	112MB4	30000	11200
20.1	2142	1.1	71.07	S123	112MB4	30000	11200

5.50 kW

n2 [rpm]	M2 [Nm]	fs	i	Gear reducer	Motor	Fr2 D [N]	Fr2 C-L [N]
200.3	252	1.6	7.34	S082	132MS4	12789	3654
197.6	255	1.6	7.34	S082	132S4	12840	3668
182.3	277	1.6	8.06	S082	132MS4	13137	3753
182.3	277	2.2	8.06	S102	132MS4	16374	4678
179.8	280	1.5	8.06	S082	132S4	13188	3768
179.8	280	2.2	8.06	S102	132S4	16442	4698
170.6	285	Ex	17.29	S082	132S2	13421	3834
168.3	289	Ex	17.29	S082	112MB2	13472	3849
168.3	289	Ex	17.29	S082	132SA2	13472	3849
166.2	303	2.1	8.85	S102	132MS4	16836	4810
163.9	308	2.1	8.85	S102	132S4	16905	4830
147.8	341	1.4	9.94	S082	132MS4	13931	3980
146.5	332	Ex	20.14	S082	132S2	14006	4002
145.8	346	1.4	9.94	S082	132S4	13984	3995
144.5	337	Ex	20.14	S082	112MB2	14059	4017
144.5	337	Ex	20.14	S082	132SA2	14059	4017
135.1	373	1.8	10.88	S102	132MS4	17902	5115
133.3	365	Ex	22.13	S082	132S2	14375	4107
133.2	379	1.8	10.88	S102	132S4	17975	5136
131.5	370	Ex	22.13	S082	112MB2	14428	4122
131.5	370	Ex	22.13	S082	132SA2	14428	4122
130.8	389	1.0	7.34	S082	132MB6	14393	4112
126.7	398	1.3	11.61	S082	132MS4	14532	4152
124.9	404	1.3	11.61	S082	132S4	14585	4167
122.9	396	Ex	24.00	S082	132S2	14697	4199
121.3	401	Ex	24.00	S082	112MB2	14751	4215
121.3	401	Ex	24.00	S082	132SA2	14751	4215
119.1	428	1.0	8.06	S082	132MB6	14761	4217
119.1	428	1.4	8.06	S102	132MB6	18562	5304
115.3	437	1.2	12.75	S082	132MS4	14902	4258
115.3	437	1.6	12.75	S102	132MS4	18748	5357
113.7	443	1.2	12.75	S082	132S4	14956	4273

5.1 S GEARED MOTORS (50Hz)

5.50 kW

n2 [rpm]	M2 [Nm]	fs	i	Gear reducer	Motor	Fr2 D [N]	Fr2 C-L [N]
113.7	443	1.6	12.75	S102	132S4	18822	5378
108.5	469	1.4	8.85	S102	132MB6	19066	5447
108.1	450	Ex	27.29	S082	132S2	15211	4346
106.6	456	Ex	27.29	S082	112MB2	15266	4362
106.6	456	Ex	27.29	S082	132SA2	15266	4362
105.1	480	1.8	13.99	S102	132MS4	19256	5502
103.6	486	1.8	13.99	S102	132S4	19331	5523
102.9	473	Ex	28.67	S082	132S2	15411	4403
101.5	479	Ex	28.67	S082	112MB2	15466	4419
101.5	479	Ex	28.67	S082	132SA2	15466	4419
92.8	524	Ex	31.78	S082	132S2	15828	4522
91.6	531	Ex	31.78	S082	112MB2	15883	4538
91.6	531	Ex	31.78	S082	132SA2	15883	4538
88.2	577	1.2	10.88	S102	132MB6	20222	5778
85.4	590	1.6	17.21	S102	132MS4	20420	5834
84.5	576	Ex	34.91	S082	132S2	16211	4632
84.2	599	1.6	17.21	S102	132S4	20499	5857
83.4	584	Ex	34.91	S082	112MB2	16267	4648
83.4	584	Ex	34.91	S082	132SA2	16267	4648
77.4	652	1.5	19.00	S102	132MS4	20989	5997
76.3	661	1.5	19.00	S102	132S4	21068	6020
75.3	676	1.1	12.75	S102	132MB6	21129	6037
72.7	670	Ex	40.05	S082	112MB2	16828	4808
69.2	729	2.8	21.25	S122	132MS4	30000	8831
68.6	742	1.2	13.99	S102	132MB6	21670	6191
68.2	739	2.7	21.25	S122	132S4	30000	8863
66.4	759	1.3	22.13	S102	132MS4	21879	6251
65.5	769	1.3	22.13	S102	132S4	21960	6274
63.1	799	2.6	23.29	S122	132MS4	30000	9050
62.3	810	2.6	23.29	S122	132S4	30000	9083
60.6	833	1.3	24.28	S102	132MS4	22000	6408
59.7	844	1.3	24.28	S102	132S4	22000	6432
56.2	897	2.4	26.15	S122	132MS4	30000	9331
55.8	913	1.0	17.21	S102	132MB6	22000	6542
55.8	903	1.2	26.33	S102	132MS4	22000	6547
55.4	910	2.4	26.15	S122	132S4	30000	9364
55.1	916	1.2	26.33	S102	132S4	22000	6571
51.4	981	2.2	28.60	S122	132MS4	30000	9548
50.7	995	2.2	28.60	S122	132S4	30000	9582
50.5	1008	1.0	19.00	S102	132MB6	22000	6711
49.2	1025	1.1	29.87	S102	132MS4	22000	6764
48.5	1039	1.0	29.87	S102	132S4	22000	6787
48.2	1047	2.4	30.51	S122	132MS4	30000	9706
47.5	1061	2.4	30.51	S122	132S4	30000	9740
45.4	1111	1.2	32.40	S102	132MS4	22000	6904

5.1 S GEARED MOTORS (50Hz)

5.50 kW

n2 [rpm]	M2 [Nm]	fs	i	Gear reducer	Motor	Fr2 D [N]	Fr2 C-L [N]
45.2	1127	1.8	21.25	S122	132MB6	30000	9852
44.8	1127	1.1	32.40	S102	132S4	22000	6928
44.0	1147	2.2	33.44	S122	132MS4	30000	9931
43.4	1163	2.2	33.44	S122	132S4	30000	9964
41.8	1207	2.1	35.20	S122	132MS4	30000	10056
41.2	1236	1.7	23.29	S122	132MB6	30000	10075
41.2	1224	2.1	35.20	S122	132S4	30000	10089
36.7	1387	1.6	26.15	S122	132MB6	30000	10355
35.8	1409	1.8	41.07	S122	132MS4	30000	10431
35.3	1428	1.8	41.07	S122	132S4	30000	10464
33.7	1495	1.7	43.60	S122	132MS4	30000	10575
33.6	1517	1.4	28.60	S122	132MB6	30000	10570
33.3	1516	1.7	43.60	S122	132S4	30000	10608
31.5	1619	1.6	30.51	S122	132MB6	30000	10724
30.0	1682	1.2	49.04	S122	132MS4	30000	10856
29.6	1705	1.2	49.04	S122	132S4	30000	10888
28.7	1774	1.4	33.44	S122	132MB6	30000	10939
27.3	1867	1.4	35.20	S122	132MB6	30000	11057
27.3	1844	1.2	53.75	S122	132MS4	30000	11071
27.0	1869	1.2	53.75	S122	132S4	30000	11102
23.4	2179	1.2	41.07	S122	132MB6	30000	11200
22.3	2264	1.1	66.00	S122	132MS4	30000	11200
22.0	2295	1.1	66.00	S122	132S4	30000	11200
22.0	2313	1.1	43.60	S122	132MB6	30000	11200

7.50 kW

n2 [rpm]	M2 [Nm]	fs	i	Gear reducer	Motor	Fr2 D [N]	Fr2 C-L [N]
198.9	346	1.1	7.34	S082	132M4	12511	3575
197.6	348	1.1	7.34	S082	132MA4	12535	3581
181.1	380	1.1	8.06	S082	132M4	12830	3666
181.1	380	1.6	8.06	S102	132M4	16145	4613
179.8	382	1.1	8.06	S082	132MA4	12853	3672
179.8	382	1.6	8.06	S102	132MA4	16177	4622
170.6	389	Ex	17.29	S082	132M2	13080	3737
168.3	394	Ex	17.29	S082	132SB2	13127	3751
165.0	417	1.6	8.85	S102	132M4	16582	4738
163.9	420	1.5	8.85	S102	132MA4	16615	4747
146.8	468	1.0	9.94	S082	132MA4	13547	3871
146.8	468	1.0	9.94	S082	132M4	13547	3871
146.5	453	Ex	20.14	S082	132M2	13609	3888
144.5	459	Ex	20.14	S082	132SB2	13657	3902
134.1	513	1.3	10.88	S102	132M4	17584	5024
133.3	498	Ex	22.13	S082	132M2	13939	3982

5.1 S GEARED MOTORS (50Hz)

7.50 kW

n2 [rpm]	M2 [Nm]	fs	i	Gear reducer	Motor	Fr2 D [N]	Fr2 C-L [N]
133.2	516	1.3	10.88	S102	132MA4	17617	5034
131.5	504	Ex	22.13	S082	132SB2	13986	3996
122.9	540	Ex	24.00	S082	132M2	14224	4064
121.3	547	Ex	24.00	S082	132SB2	14272	4078
120.3	577	1.1	8.06	S102	160M6	18107	5174
114.5	600	1.2	12.75	S102	132M4	18369	5248
114.4	607	1.8	8.48	S122	160M6	26221	7492
113.7	605	1.2	12.75	S102	132MA4	18404	5258
109.6	633	1.0	8.85	S102	160M6	18571	5306
104.4	659	1.3	13.99	S102	132M4	18837	5382
104.3	666	1.8	9.30	S122	160M6	26877	7679
103.6	663	1.3	13.99	S102	132MA4	18872	5392
85.0	817	1.7	11.42	S122	160M6	28363	8104
84.8	811	1.2	17.21	S102	132M4	19898	5685
84.2	816	1.2	17.21	S102	132MA4	19934	5695
76.8	895	1.1	19.00	S102	132M4	20409	5831
76.8	904	1.8	12.63	S122	160M6	29098	8314
76.3	901	1.1	19.00	S102	132MA4	20445	5841
70.1	991	1.8	13.84	S122	160M6	29769	8505
68.7	1001	2.0	21.25	S122	132M4	29953	8558
68.2	1008	2.0	21.25	S122	132MA4	30000	8572
62.7	1097	1.9	23.29	S122	132M4	30000	8750
62.3	1105	1.9	23.29	S122	132MA4	30000	8765
57.1	1217	1.5	16.99	S122	160M6	30000	8932
55.8	1232	1.8	26.15	S122	132M4	30000	8992
55.4	1240	1.7	26.15	S122	132MA4	30000	9006
51.0	1347	1.6	28.60	S122	132M4	30000	9176
50.7	1356	1.6	28.60	S122	132MA4	30000	9190
47.8	1437	1.8	30.51	S122	132M4	30000	9308
47.5	1447	1.8	30.51	S122	132MA4	30000	9322
45.6	1521	1.3	21.25	S122	160M6	30000	9387
43.7	1575	1.6	33.44	S122	132M4	30000	9493
43.4	1586	1.6	33.44	S122	132MA4	30000	9507
41.6	1668	1.3	23.29	S122	160M6	30000	9568
41.5	1658	1.5	35.20	S122	132M4	30000	9594
41.2	1669	1.5	35.20	S122	132MA4	30000	9608
37.1	1872	1.2	26.15	S122	160M6	30000	9790
35.6	1934	1.3	41.07	S122	132M4	30000	9889
35.3	1947	1.3	41.07	S122	132MA4	30000	9902
33.9	2048	1.1	28.60	S122	160M6	30000	9954
33.5	2053	1.2	43.60	S122	132M4	30000	9999
33.3	2067	1.2	43.60	S122	132MA4	30000	10012
31.8	2185	1.2	30.51	S122	160M6	30000	10069
29.0	2394	1.1	33.44	S122	160M6	30000	10224
27.6	2520	1.0	35.20	S122	160M6	30000	10306

5.1 S GEARED MOTORS (50Hz)

9.20 kW

n2 [rpm]	M2 [Nm]	fs	i	Gear reducer	Motor	Fr2 D [N]	Fr2 C-L [N]
179.8	469	1.3	8.06	S102	132MB4	15952	4558
169.4	480	Ex	17.29	S082	132M2	12812	3660
168.3	484	Ex	17.29	S082	132MA2	12833	3667
163.9	515	1.3	8.85	S102	132MB4	16368	4677
133.2	633	1.1	10.88	S102	132MB4	17314	4947
103.6	814	1.1	13.99	S102	132MB4	18482	5281
68.2	1236	1.6	21.25	S122	132MB4	29138	8325
62.3	1355	1.5	23.29	S122	132MB4	29728	8494
55.4	1521	1.4	26.15	S122	132MB4	30000	8702
50.7	1664	1.3	28.60	S122	132MB4	30000	8858
47.5	1775	1.4	30.51	S122	132MB4	30000	8967
43.4	1945	1.3	33.44	S122	132MB4	30000	9117
41.2	2048	1.3	35.20	S122	132MB4	30000	9198
35.3	2389	1.1	41.07	S122	132MB4	30000	9424
33.3	2536	1.0	43.60	S122	132MB4	30000	9504

11.00 kW

n2 [rpm]	M2 [Nm]	fs	i	Gear reducer	Motor	Fr2 D [N]	Fr2 C-L [N]
182.9	551	1.1	8.06	S102	160MA4	15642	4469
178.6	565	1.1	8.06	S102	132MC4	15743	4498
178.6	565	1.1	8.06	S102	160S4	15743	4498
173.9	580	1.9	8.48	S122	160MA4	22641	6469
169.8	594	1.8	8.48	S122	160S4	22785	6510
166.7	605	1.1	8.85	S102	160MA4	16034	4581
162.8	620	1.0	8.85	S102	132MC4	16136	4610
162.8	620	1.0	8.85	S102	160S4	16136	4610
158.6	636	1.9	9.30	S122	160MA4	23193	6627
154.9	651	1.9	9.30	S122	160S4	23338	6668
129.2	781	1.8	11.42	S122	160MA4	24439	6983
126.1	800	1.7	11.42	S122	160S4	24585	7024
116.8	863	1.8	12.63	S122	160MA4	25052	7158
114.4	891	1.2	8.48	S122	160L6	25148	7185
114.1	884	1.8	12.63	S122	160S4	25197	7199
106.6	946	1.8	13.84	S122	160MA4	25608	7317
104.3	976	1.3	9.30	S122	160L6	25700	7343
104.1	969	1.8	13.84	S122	160S4	25753	7358
86.8	1162	1.6	16.99	S122	160MA4	26837	7668
85.0	1199	1.1	11.42	S122	160L6	26918	7691
84.7	1190	1.6	16.99	S122	160S4	26979	7708
76.8	1326	1.2	12.63	S122	160L6	27500	7857
70.1	1453	1.2	13.84	S122	160L6	28017	8005
69.4	1453	1.4	21.25	S122	160MA4	28127	8036
67.8	1488	1.4	21.25	S122	132MC4	28260	8074

5.1 S GEARED MOTORS (50Hz)

11.00 kW

n2 [rpm]	M2 [Nm]	fs	i	Gear reducer	Motor	Fr2 D [N]	Fr2 C-L [N]
67.8	1488	1.4	21.25	S122	160S4	28260	8074
63.3	1592	1.3	23.29	S122	160MA4	28631	8180
61.8	1631	1.3	23.29	S122	132MC4	28761	8217
61.8	1631	1.3	23.29	S122	160S4	28761	8217
57.1	1784	1.1	16.99	S122	160L6	29113	8318
56.4	1788	1.2	26.15	S122	160MA4	29242	8355
55.1	1832	1.2	26.15	S122	132MC4	29364	8390
55.1	1832	1.2	26.15	S122	160S4	29364	8390
51.6	1955	1.1	28.60	S122	160MA4	29687	8482
50.3	2003	1.1	28.60	S122	132MC4	29802	8515
50.3	2003	1.1	28.60	S122	160S4	29802	8515
48.3	2086	1.2	30.51	S122	160MA4	29992	8569
47.2	2137	1.2	30.51	S122	132MC4	30000	8600
47.2	2137	1.2	30.51	S122	160S4	30000	8600
44.1	2287	1.1	33.44	S122	160MA4	30000	8685
43.1	2342	1.1	33.44	S122	132MC4	30000	8714
43.1	2342	1.1	33.44	S122	160S4	30000	8714
41.9	2407	1.1	35.20	S122	160MA4	30000	8745
40.9	2465	1.0	35.20	S122	132MC4	30000	8772
40.9	2465	1.0	35.20	S122	160S4	30000	8772

15.00 kW

n2 [rpm]	M2 [Nm]	fs	i	Gear reducer	Motor	Fr2 D [N]	Fr2 C-L [N]
173.9	791	1.4	8.48	S122	160LA4	21842	6241
158.6	867	1.4	9.30	S122	160LA4	22318	6376
129.2	1064	1.3	11.42	S122	160LA4	23364	6675
116.8	1177	1.4	12.63	S122	160LA4	23862	6818
106.6	1290	1.3	13.84	S122	160LA4	24305	6944
86.8	1584	1.2	16.99	S122	160LA4	25237	7211
69.4	1981	1.0	21.25	S122	160LA4	26125	7464

18.50 kW

n2 [rpm]	M2 [Nm]	fs	i	Gear reducer	Motor	Fr2 D [N]	Fr2 C-L [N]
173.3	979	1.1	8.48	S122	180M4	21158	6045
158.1	1073	1.1	9.30	S122	180M4	21566	6162
128.8	1317	1.0	11.42	S122	180M4	22437	6411
116.4	1457	1.1	12.63	S122	180M4	22835	6524
106.2	1597	1.1	13.84	S122	180M4	23176	6622

5.2 IS GEAR REDUCER - 1750 RPM

IS052

Mn_2 [Nm]	i	Pn_1 [kW]	n2 [rpm]	Fr1 [N]	Fr2 D [N]	Fr2 C-L [N]
123	8.63	2.72	202.9	759	3125	3125
137	11.14	2.35	157.1	846	3373	3373
152	13.66	2.12	128.2	901	3570	3570
174	15.27	2.17	114.6	890	3584	3584
174	16.29	2.04	107.5	922	3689	3689
174	18.63	1.78	93.9	983	3916	3916
188	21.04	1.71	83.2	1000	4020	4020
188	24.07	1.49	72.7	1051	4267	4267
208	25.79	1.54	67.9	1037	4234	4234
208	27.81	1.43	62.9	1064	4381	4381
208	30.00	1.32	58.3	1089	4532	4532
256	32.55	1.50	53.8	1104	4644	4644
282	36.55	1.47	47.9	1110	4725	4725
298	39.90	1.43	43.9	1118	4808	4808
298	42.63	1.33	41.1	1137	4956	4956
298	47.20	1.21	37.1	1163	5191	5191
298	52.25	1.09	33.5	1186	5433	5433
298	57.86	0.98	30.2	1208	5685	5685
298	72.83	0.78	24.0	1249	6000	6000

IS053

Mn_2 [Nm]	i	Pn_1 [kW]	n2 [rpm]	Fr1 [N]	Fr2 D [N]	Fr2 C-L [N]
300	74.20	0.79	23.6	1251	6000	6000
298	95.84	0.61	18.3	1286	6000	6000
296	117.48	0.49	14.9	1309	6000	6000
300	137.45	0.43	12.7	1323	6000	6000
300	177.55	0.33	9.9	1342	6000	6000
304	198.45	0.30	8.8	1348	6000	6000
298	217.64	0.27	8.0	1354	6000	6000
294	256.33	0.22	6.8	1362	6000	6000
292	314.21	0.18	5.6	1370	6000	6000

IS062

Mn_2 [Nm]	i	Pn_1 [kW]	n2 [rpm]	Fr1 [N]	Fr2 D [N]	Fr2 C-L [N]
238	8.00	5.68	218.8	413	4832	1933
260	9.55	5.20	183.3	499	5061	2024
282	11.71	4.60	149.5	605	5385	2154
302	13.36	4.32	131.0	650	5548	2219
324	15.94	3.88	109.8	727	5853	2341
332	19.55	3.24	89.5	841	6388	2555
338	23.18	2.78	75.5	920	6856	2742

5.2 IS GEAR REDUCER - 1750 RPM

IS062

Mn_2 [Nm]	i	Pn_1 [kW]	n2 [rpm]	Fr1 [N]	Fr2 D [N]	Fr2 C-L [N]
346	25.14	2.63	69.6	948	7059	2824
346	27.66	2.39	63.3	990	7376	2950
360	30.00	2.29	58.3	1007	7536	3014
510	36.57	2.66	47.9	1013	7650	3060
510	39.38	2.47	44.4	1041	7927	3171
510	43.64	2.23	40.1	1077	8324	3329
510	46.10	2.11	38.0	1095	8541	3416
510	53.53	1.82	32.7	1138	9154	3661
510	55.00	1.77	31.8	1146	9268	3707
510	67.47	1.44	25.9	1194	10000	4000

IS063

Mn_2 [Nm]	i	Pn_1 [kW]	n2 [rpm]	Fr1 [N]	Fr2 D [N]	Fr2 C-L [N]
510	81.43	1.22	21.5	1231	10000	4000
510	99.89	1.00	17.5	1264	10000	4000
510	126.43	0.79	13.8	1294	10000	4000
510	150.85	0.66	11.6	1313	10000	4000
515	185.05	0.54	9.5	1331	10000	4000
510	217.79	0.46	8.0	1342	10000	4000
510	267.16	0.37	6.5	1355	10000	4000

IS082

Mn_2 [Nm]	i	Pn_1 [kW]	n2 [rpm]	Fr1 [N]	Fr2 D [N]	Fr2 C-L [N]
396	7.34	10.30	238.4	1365	11156	3188
432	8.06	10.23	217.1	1376	11407	3259
470	9.94	9.02	176.0	1572	12203	3487
505	11.61	8.31	150.8	1681	12792	3655
540	12.75	8.08	137.2	1714	13109	3745
555	17.29	6.13	101.2	2023	14680	4194
555	20.14	5.26	86.9	2159	15559	4445
575	22.13	4.96	79.1	2204	16032	4580
575	24.00	4.57	72.9	2265	16535	4724
650	27.29	4.55	64.1	2273	17049	4871
650	28.67	4.33	61.0	2308	17375	4964
850	31.78	5.11	55.1	2306	17762	5075
850	34.91	4.65	50.1	2367	18000	5263
850	40.05	4.05	43.7	2447	18000	5548
850	43.05	3.77	40.6	2484	18000	5703
850	50.25	3.23	34.8	2556	18000	6047
850	54.27	2.99	32.2	2588	18000	6226
850	61.98	2.62	28.2	2638	18000	6544

5.2 IS GEAR REDUCER - 1750 RPM

IS083

Mn_2 [Nm]	i	Pn_1 [kW]	n2 [rpm]	Fr1 [N]	Fr2 D [N]	Fr2 C-L [N]
850	67.52	2.45	25.9	2667	18000	6757
850	74.18	2.23	23.6	2695	18000	6998
850	91.49	1.81	19.1	2750	18000	7200
850	117.17	1.41	14.9	2802	18000	7200
850	128.73	1.29	13.6	2819	18000	7200
850	158.76	1.04	11.0	2851	18000	7200
850	184.88	0.90	9.5	2870	18000	7200
855	203.11	0.82	8.6	2881	18000	7200
850	250.50	0.66	7.0	2901	18000	7200
845	292.36	0.56	6.0	2913	18000	7200
845	315.73	0.52	5.5	2919	18000	7200
845	360.58	0.46	4.8	2927	18000	7200

IS102

Mn_2 [Nm]	i	Pn_1 [kW]	n2 [rpm]	Fr1 [N]	Fr2 D [N]	Fr2 C-L [N]
610	8.06	14.44	217.1	788	14063	4018
650	8.85	14.03	197.8	865	14442	4126
685	10.88	12.01	160.8	1166	15499	4428
720	12.75	10.78	137.2	1351	16332	4666
865	13.99	11.80	125.1	1198	16427	4694
940	17.21	10.42	101.7	1412	17554	5015
1010	19.00	10.15	92.1	1450	17997	5142
1010	22.13	8.71	79.1	1668	19100	5457
1080	24.28	8.49	72.1	1699	19556	5588
1080	26.33	7.83	66.5	1800	20188	5768
1080	29.87	6.90	58.6	1940	21200	6057
1280	32.40	7.54	54.0	2022	21877	6250
1195	34.91	6.53	50.1	2152	22000	6502
1280	38.30	6.38	45.7	2171	22000	6665
1110	44.00	4.82	39.8	2372	22000	7165
1365	47.13	5.53	37.1	2280	22000	7141
1110	55.14	3.84	31.7	2497	22000	7789
1365	59.40	4.39	29.5	2426	22000	7796
1365	67.84	3.84	25.8	2496	22000	8196

IS103

Mn_2 [Nm]	i	Pn_1 [kW]	n2 [rpm]	Fr1 [N]	Fr2 D [N]	Fr2 C-L [N]
1365	74.18	3.59	23.6	2539	22000	8474
1365	81.39	3.27	21.5	2578	22000	8773
1365	100.15	2.66	17.5	2655	22000	9000
1365	110.55	2.41	15.8	2687	22000	9000

5.2 IS GEAR REDUCER - 1750 RPM

IS103

Mn_2 [Nm]	i	Pn_1 [kW]	n2 [rpm]	Fr1 [N]	Fr2 D [N]	Fr2 C-L [N]
1365	128.73	2.07	13.6	2729	22000	9000
1365	141.24	1.88	12.4	2752	22000	9000
1370	173.78	1.54	10.1	2797	22000	9000
1365	203.11	1.31	8.6	2824	22000	9000
1365	222.85	1.19	7.8	2839	22000	9000
1365	274.20	0.97	6.4	2867	22000	9000
1370	320.79	0.83	5.5	2885	22000	9000
1360	345.60	0.77	5.1	2892	22000	9000
1360	394.69	0.67	4.4	2904	22000	9000

IS122

Mn_2 [Nm]	i	Pn_1 [kW]	n2 [rpm]	Fr1 [N]	Fr2 D [N]	Fr2 C-L [N]
1080	8.48	24.30	206.3	3012	18134	5181
1225	9.30	25.15	188.2	2979	18143	5184
1370	11.42	22.91	153.3	3068	19127	5465
1590	12.63	24.04	138.6	3026	18934	5410
1735	13.84	23.93	126.5	3030	19045	5441
1880	16.99	21.12	103.0	3140	20267	5791
2020	21.25	18.14	82.3	3255	21815	6233
2095	23.29	17.17	75.1	3294	22436	6410
2165	26.15	15.80	66.9	3347	23357	6674
2165	28.60	14.45	61.2	3400	24377	6965
2560	30.51	16.01	57.4	3435	25134	7181
2560	33.44	14.61	52.3	3482	26235	7496
2560	35.20	13.88	49.7	3506	26863	7675
2560	41.07	11.90	42.6	3571	28822	8235
2560	43.60	11.21	40.1	3594	29610	8460
2050	49.04	7.98	35.7	3702	30000	9526
2220	53.75	7.88	32.6	3705	30000	9690
2560	66.00	7.40	26.5	3720	30000	10148

IS123

Mn_2 [Nm]	i	Pn_1 [kW]	n2 [rpm]	Fr1 [N]	Fr2 D [N]	Fr2 C-L [N]
2305	71.07	6.32	24.6	3761	30000	10780
2560	87.27	5.72	20.1	3780	30000	11200
2560	112.52	4.44	15.6	3822	30000	11200
2560	123.33	4.05	14.2	3834	30000	11200
2565	133.78	3.74	13.1	3845	30000	11200
2560	151.43	3.30	11.6	3859	30000	11200
2565	177.53	2.82	9.9	3874	30000	11200
2555	194.59	2.56	9.0	3882	30000	11200

5.2 IS GEAR REDUCER - 1750 RPM

IS123

Mn_2 [Nm]	i	Pn_1 [kW]	n2 [rpm]	Fr1 [N]	Fr2 D [N]	Fr2 C-L [N]
2565	238.93	2.09	7.3	3898	30000	11200

5.3 IS GEAR REDUCER - 1400 RPM

IS052

Mn_2 [Nm]	i	Pn_1 [kW]	n2 [rpm]	Fr1 [N]	Fr2 D [N]	Fr2 C-L [N]
123	8.63	2.18	162.3	718	3375	3375
137	11.14	1.88	125.7	810	3644	3644
152	13.66	1.70	102.5	869	3857	3857
174	15.27	1.74	91.7	857	3874	3874
174	16.29	1.63	86.0	891	3987	3987
174	18.63	1.43	75.1	956	4231	4231
188	21.04	1.36	66.5	974	4345	4345
188	24.07	1.19	58.2	1029	4611	4611
208	25.79	1.23	54.3	1013	4578	4578
208	27.81	1.14	50.3	1042	4736	4736
208	30.00	1.06	46.7	1069	4898	4898
256	32.55	1.20	43.0	1084	5020	5020
282	36.55	1.18	38.3	1091	5109	5109
298	39.90	1.14	35.1	1100	5200	5200
298	42.63	1.07	32.8	1119	5359	5359
298	47.20	0.96	29.7	1147	5612	5612
298	52.25	0.87	26.8	1172	5873	5873
298	57.86	0.79	24.2	1195	6000	6000
298	72.83	0.62	19.2	1238	6000	6000

IS053

Mn_2 [Nm]	i	Pn_1 [kW]	n2 [rpm]	Fr1 [N]	Fr2 D [N]	Fr2 C-L [N]
300	74.20	0.63	18.9	1242	6000	6000
298	95.84	0.48	14.6	1279	6000	6000
296	117.48	0.39	11.9	1302	6000	6000
300	137.45	0.34	10.2	1317	6000	6000
300	177.55	0.26	7.9	1338	6000	6000
304	198.45	0.24	7.0	1345	6000	6000
298	217.64	0.21	6.4	1350	6000	6000
294	256.33	0.18	5.5	1359	6000	6000
292	314.21	0.14	4.5	1367	6000	6000

IS062

Mn_2 [Nm]	i	Pn_1 [kW]	n2 [rpm]	Fr1 [N]	Fr2 D [N]	Fr2 C-L [N]
238	8.00	4.54	175.0	350	5225	2090
260	9.55	4.16	146.7	441	5474	2190
282	11.71	3.68	119.6	554	5825	2330
302	13.36	3.45	104.8	602	6004	2401
324	15.94	3.10	87.8	684	6334	2533
332	19.55	2.59	71.6	805	6911	2764
338	23.18	2.23	60.4	888	7415	2966

5.3 IS GEAR REDUCER - 1400 RPM

IS062

Mn_2 [Nm]	i	Pn_1 [kW]	n2 [rpm]	Fr1 [N]	Fr2 D [N]	Fr2 C-L [N]
346	25.14	2.10	55.7	919	7635	3054
346	27.66	1.91	50.6	963	7976	3190
360	30.00	1.83	46.7	981	8149	3260
510	36.57	2.13	38.3	988	8280	3312
510	39.38	1.98	35.6	1018	8578	3431
510	43.64	1.78	32.1	1056	9005	3602
510	46.10	1.69	30.4	1075	9239	3695
510	53.53	1.45	26.1	1121	9898	3959
510	55.00	1.42	25.4	1129	10000	4000
510	67.47	1.15	20.8	1181	10000	4000

IS063

Mn_2 [Nm]	i	Pn_1 [kW]	n2 [rpm]	Fr1 [N]	Fr2 D [N]	Fr2 C-L [N]
510	81.43	0.98	17.2	1220	10000	4000
510	99.89	0.80	14.0	1255	10000	4000
510	126.43	0.63	11.1	1287	10000	4000
510	150.85	0.53	9.3	1307	10000	4000
515	185.05	0.43	7.6	1326	10000	4000
510	217.79	0.37	6.4	1338	10000	4000
510	267.16	0.30	5.2	1351	10000	4000

IS082

Mn_2 [Nm]	i	Pn_1 [kW]	n2 [rpm]	Fr1 [N]	Fr2 D [N]	Fr2 C-L [N]
396	7.34	8.24	190.8	1261	12030	3437
432	8.06	8.18	173.6	1273	12302	3515
470	9.94	7.22	140.8	1482	13161	3760
505	11.61	6.64	120.6	1598	13797	3942
540	12.75	6.47	109.8	1632	14140	4040
555	17.29	4.90	81.0	1962	15832	4523
555	20.14	4.21	69.5	2107	16778	4794
575	22.13	3.97	63.3	2154	17288	4939
575	24.00	3.66	58.3	2219	17830	5094
650	27.29	3.64	51.3	2228	18000	5253
650	28.67	3.46	48.8	2264	18000	5354
850	31.78	4.08	44.1	2262	18000	5474
850	34.91	3.72	40.1	2327	18000	5676
850	40.05	3.24	35.0	2412	18000	5983
850	43.05	3.01	32.5	2452	18000	6150
850	50.25	2.58	27.9	2529	18000	6521
850	54.27	2.39	25.8	2563	18000	6712
850	61.98	2.09	22.6	2616	18000	7055

5.3 IS GEAR REDUCER - 1400 RPM

IS083

Mn_2 [Nm]	i	Pn_1 [kW]	n2 [rpm]	Fr1 [N]	Fr2 D [N]	Fr2 C-L [N]
850	67.52	1.96	20.7	2646	18000	7200
850	74.18	1.79	18.9	2677	18000	7200
850	91.49	1.45	15.3	2735	18000	7200
850	117.17	1.13	11.9	2791	18000	7200
850	128.73	1.03	10.9	2808	18000	7200
850	158.76	0.83	8.8	2842	18000	7200
850	184.88	0.72	7.6	2863	18000	7200
855	203.11	0.66	6.9	2874	18000	7200
850	250.50	0.53	5.6	2895	18000	7200
845	292.36	0.45	4.8	2908	18000	7200
845	315.73	0.42	4.4	2914	18000	7200
845	360.58	0.37	3.9	2923	18000	7200

IS102

Mn_2 [Nm]	i	Pn_1 [kW]	n2 [rpm]	Fr1 [N]	Fr2 D [N]	Fr2 C-L [N]
610	8.06	11.55	173.6	647	15163	4332
650	8.85	11.22	158.3	729	15574	4450
685	10.88	9.61	128.6	1050	16712	4775
720	12.75	8.62	109.8	1247	17610	5032
865	13.99	9.44	100.1	1084	17719	5063
940	17.21	8.34	81.3	1311	18935	5410
1010	19.00	8.12	73.7	1352	19415	5547
1010	22.13	6.97	63.3	1583	20603	5886
1080	24.28	6.79	57.7	1616	21097	6028
1080	26.33	6.26	53.2	1724	21777	6222
1080	29.87	5.52	46.9	1873	22000	6533
1280	32.40	6.03	43.2	1961	22000	6741
1195	34.91	5.23	40.1	2098	22000	7011
1280	38.30	5.10	36.5	2119	22000	7187
1110	44.00	3.85	31.8	2333	22000	7724
1365	47.13	4.42	29.7	2235	22000	7701
1110	55.14	3.07	25.4	2465	22000	8396
1365	59.40	3.51	23.6	2391	22000	8406
1365	67.84	3.07	20.6	2465	22000	8836

IS103

Mn_2 [Nm]	i	Pn_1 [kW]	n2 [rpm]	Fr1 [N]	Fr2 D [N]	Fr2 C-L [N]
1365	74.18	2.87	18.9	2510	22000	9000
1365	81.39	2.62	17.2	2552	22000	9000
1365	100.15	2.13	14.0	2634	22000	9000
1365	110.55	1.93	12.7	2667	22000	9000

5.3 IS GEAR REDUCER - 1400 RPM

IS103

Mn_2 [Nm]	i	Pn_1 [kW]	n2 [rpm]	Fr1 [N]	Fr2 D [N]	Fr2 C-L [N]
1365	128.73	1.65	10.9	2713	22000	9000
1365	141.24	1.51	9.9	2737	22000	9000
1370	173.78	1.23	8.1	2784	22000	9000
1365	203.11	1.05	6.9	2814	22000	9000
1365	222.85	0.96	6.3	2829	22000	9000
1365	274.20	0.78	5.1	2859	22000	9000
1370	320.79	0.67	4.4	2878	22000	9000
1360	345.60	0.61	4.0	2886	22000	9000
1360	394.69	0.54	3.5	2899	22000	9000

IS122

Mn_2 [Nm]	i	Pn_1 [kW]	n2 [rpm]	Fr1 [N]	Fr2 D [N]	Fr2 C-L [N]
1080	8.48	19.44	165.1	2951	19587	5596
1225	9.30	20.12	150.6	2916	19606	5602
1370	11.42	18.33	122.6	3010	20674	5907
1590	12.63	19.23	110.9	2966	20480	5851
1735	13.84	19.14	101.2	2970	20608	5888
1880	16.99	16.89	82.4	3087	21932	6266
2020	21.25	14.52	65.9	3209	23608	6745
2095	23.29	13.74	60.1	3251	24280	6937
2165	26.15	12.64	53.5	3307	25277	7222
2165	28.60	11.56	49.0	3364	26374	7535
2560	30.51	12.81	45.9	3401	27189	7768
2560	33.44	11.69	41.9	3451	28374	8107
2560	35.20	11.11	39.8	3476	29050	8300
2560	41.07	9.52	34.1	3546	30000	8903
2560	43.60	8.97	32.1	3571	30000	9145
2050	49.04	6.38	28.6	3685	30000	10285
2220	53.75	6.31	26.1	3688	30000	10464
2560	66.00	5.92	21.2	3705	30000	10962

IS123

Mn_2 [Nm]	i	Pn_1 [kW]	n2 [rpm]	Fr1 [N]	Fr2 D [N]	Fr2 C-L [N]
2305	71.07	5.06	19.7	3748	30000	11200
2560	87.27	4.57	16.0	3768	30000	11200
2560	112.52	3.55	12.4	3813	30000	11200
2560	123.33	3.24	11.3	3826	30000	11200
2565	133.78	2.99	10.5	3837	30000	11200
2560	151.43	2.64	9.2	3852	30000	11200
2565	177.53	2.25	7.9	3869	30000	11200
2555	194.59	2.05	7.2	3877	30000	11200

5.3 IS GEAR REDUCER - 1400 RPM

IS123

Mn_2 [Nm]	i	Pn_1 [kW]	n2 [rpm]	Fr1 [N]	Fr2 D [N]	Fr2 C-L [N]
2565	238.93	1.67	5.9	3894	30000	11200

5.4 IS GEAR REDUCER - 1140 RPM

IS052

Mn_2 [Nm]	i	Pn_1 [kW]	n2 [rpm]	Fr1 [N]	Fr2 D [N]	Fr2 C-L [N]
123	8.63	1.77	132.2	700	3657	3657
137	11.14	1.53	102.3	795	3949	3949
152	13.66	1.38	83.5	855	4183	4183
174	15.27	1.42	74.6	843	4209	4209
174	16.29	1.33	70.0	878	4330	4330
174	18.63	1.16	61.2	945	4591	4591
188	21.04	1.11	54.2	964	4718	4718
188	24.07	0.97	47.4	1019	5003	5003
208	25.79	1.00	44.2	1003	4975	4975
208	27.81	0.93	41.0	1033	5144	5144
208	30.00	0.86	38.0	1060	5318	5318
256	32.55	0.98	35.0	1076	5451	5451
282	36.55	0.96	31.2	1083	5554	5554
298	39.90	0.93	28.6	1092	5656	5656
298	42.63	0.87	26.7	1112	5827	5827
298	47.20	0.78	24.1	1141	6000	6000
298	52.25	0.71	21.8	1166	6000	6000
298	57.86	0.64	19.7	1190	6000	6000
298	72.83	0.51	15.7	1234	6000	6000

IS053

Mn_2 [Nm]	i	Pn_1 [kW]	n2 [rpm]	Fr1 [N]	Fr2 D [N]	Fr2 C-L [N]
300	74.20	0.51	15.4	1237	6000	6000
298	95.84	0.39	11.9	1276	6000	6000
296	117.48	0.32	9.7	1300	6000	6000
300	137.45	0.28	8.3	1315	6000	6000
300	177.55	0.21	6.4	1336	6000	6000
304	198.45	0.19	5.7	1343	6000	6000
298	217.64	0.17	5.2	1349	6000	6000
294	256.33	0.15	4.5	1357	6000	6000
292	314.21	0.12	3.6	1367	6000	6000

IS062

Mn_2 [Nm]	i	Pn_1 [kW]	n2 [rpm]	Fr1 [N]	Fr2 D [N]	Fr2 C-L [N]
238	8.00	3.70	142.5	323	5686	2275
260	9.55	3.39	119.4	416	5962	2385
282	11.71	2.99	97.4	532	6346	2538
302	13.36	2.81	85.3	581	6545	2618
324	15.94	2.53	71.5	666	6907	2763
332	19.55	2.11	58.3	790	7527	3011
338	23.18	1.81	49.2	875	8070	3228

5.4 IS GEAR REDUCER - 1140 RPM

IS062

Mn_2 [Nm]	i	Pn_1 [kW]	n2 [rpm]	Fr1 [N]	Fr2 D [N]	Fr2 C-L [N]
346	25.14	1.71	45.3	906	8308	3323
346	27.66	1.56	41.2	952	8673	3469
360	30.00	1.49	38.0	970	8864	3545
510	36.57	1.73	31.2	977	9032	3613
510	39.38	1.61	28.9	1008	9351	3740
510	43.64	1.45	26.1	1047	9808	3923
510	46.10	1.38	24.7	1066	10000	4000
510	53.53	1.18	21.3	1114	10000	4000
510	55.00	1.15	20.7	1122	10000	4000
510	67.47	0.94	16.9	1175	10000	4000

IS063

Mn_2 [Nm]	i	Pn_1 [kW]	n2 [rpm]	Fr1 [N]	Fr2 D [N]	Fr2 C-L [N]
510	81.43	0.80	14.0	1215	10000	4000
510	99.89	0.65	11.4	1251	10000	4000
510	126.43	0.51	9.0	1284	10000	4000
510	150.85	0.43	7.6	1304	10000	4000
515	185.05	0.35	6.2	1324	10000	4000
510	217.79	0.30	5.2	1336	10000	4000
510	267.16	0.24	4.3	1350	10000	4000

IS082

Mn_2 [Nm]	i	Pn_1 [kW]	n2 [rpm]	Fr1 [N]	Fr2 D [N]	Fr2 C-L [N]
396	7.34	6.71	155.3	1218	12956	3702
432	8.06	6.66	141.4	1230	13254	3787
470	9.94	5.88	114.6	1444	14180	4052
505	11.61	5.41	98.2	1563	14869	4248
540	12.75	5.27	89.4	1599	15243	4355
555	17.29	3.99	65.9	1936	17056	4873
555	20.14	3.43	56.6	2085	18000	5163
575	22.13	3.23	51.5	2134	18000	5320
575	24.00	2.98	47.5	2200	18000	5485
650	27.29	2.96	41.8	2209	18000	5660
650	28.67	2.82	39.8	2246	18000	5767
850	31.78	3.33	35.9	2244	18000	5900
850	34.91	3.03	32.7	2311	18000	6116
850	40.05	2.64	28.5	2398	18000	6445
850	43.05	2.45	26.5	2439	18000	6624
850	50.25	2.10	22.7	2517	18000	7020
850	54.27	1.95	21.0	2552	18000	7200
850	61.98	1.71	18.4	2606	18000	7200

5.4 IS GEAR REDUCER - 1140 RPM

IS083

Mn_2 [Nm]	i	Pn_1 [kW]	n2 [rpm]	Fr1 [N]	Fr2 D [N]	Fr2 C-L [N]
850	67.52	1.60	16.9	2638	18000	7200
850	74.18	1.46	15.4	2669	18000	7200
850	91.49	1.18	12.5	2729	18000	7200
850	117.17	0.92	9.7	2786	18000	7200
850	128.73	0.84	8.9	2804	18000	7200
850	158.76	0.68	7.2	2838	18000	7200
850	184.88	0.58	6.2	2859	18000	7200
855	203.11	0.53	5.6	2871	18000	7200
850	250.50	0.43	4.5	2893	18000	7200
845	292.36	0.37	3.9	2906	18000	7200
845	315.73	0.34	3.6	2912	18000	7200
845	360.58	0.30	3.2	2922	18000	7200

IS102

Mn_2 [Nm]	i	Pn_1 [kW]	n2 [rpm]	Fr1 [N]	Fr2 D [N]	Fr2 C-L [N]
610	8.06	9.41	141.4	589	16327	4665
650	8.85	9.14	128.9	673	16772	4792
685	10.88	7.83	104.7	1002	17996	5142
720	12.75	7.02	89.4	1203	18963	5418
865	13.99	7.69	81.5	1036	19103	5458
940	17.21	6.79	66.2	1269	20416	5833
1010	19.00	6.61	60.0	1311	20941	5983
1010	22.13	5.68	51.5	1548	22000	6346
1080	24.28	5.53	47.0	1582	22000	6501
1080	26.33	5.10	43.3	1692	22000	6709
1080	29.87	4.50	38.2	1845	22000	7042
1280	32.40	4.91	35.2	1935	22000	7264
1195	34.91	4.26	32.7	2076	22000	7550
1280	38.30	4.16	29.8	2097	22000	7742
1110	44.00	3.14	25.9	2316	22000	8309
1365	47.13	3.60	24.2	2216	22000	8295
1110	55.14	2.50	20.7	2452	22000	9000
1365	59.40	2.86	19.2	2376	22000	9000
1365	67.84	2.50	16.8	2452	22000	9000

IS103

Mn_2 [Nm]	i	Pn_1 [kW]	n2 [rpm]	Fr1 [N]	Fr2 D [N]	Fr2 C-L [N]
1365	74.18	2.34	15.4	2498	22000	9000
1365	81.39	2.13	14.0	2541	22000	9000
1365	100.15	1.73	11.4	2625	22000	9000
1365	110.55	1.57	10.3	2659	22000	9000

5.4 IS GEAR REDUCER - 1140 RPM

IS103

Mn_2 [Nm]	i	Pn_1 [kW]	n2 [rpm]	Fr1 [N]	Fr2 D [N]	Fr2 C-L [N]
1365	128.73	1.35	8.9	2706	22000	9000
1365	141.24	1.23	8.1	2731	22000	9000
1370	173.78	1.00	6.6	2779	22000	9000
1365	203.11	0.85	5.6	2810	22000	9000
1365	222.85	0.78	5.1	2825	22000	9000
1365	274.20	0.63	4.2	2856	22000	9000
1370	320.79	0.54	3.5	2875	22000	9000
1360	345.60	0.50	3.3	2883	22000	9000
1360	394.69	0.44	2.9	2897	22000	9000

IS122

Mn_2 [Nm]	i	Pn_1 [kW]	n2 [rpm]	Fr1 [N]	Fr2 D [N]	Fr2 C-L [N]
1080	8.48	15.83	134.4	2925	21217	6062
1225	9.30	16.38	122.6	2890	21272	6078
1370	11.42	14.92	99.9	2987	22449	6414
1590	12.63	15.66	90.3	2941	22293	6369
1735	13.84	15.59	82.4	2945	22464	6418
1880	16.99	13.76	67.1	3066	23915	6833
2020	21.25	11.82	53.6	3190	25743	7355
2095	23.29	11.18	48.9	3233	26480	7566
2165	26.15	10.29	43.6	3291	27563	7875
2165	28.60	9.41	39.9	3349	28737	8211
2560	30.51	10.43	37.4	3387	29609	8460
2560	33.44	9.52	34.1	3438	30000	8822
2560	35.20	9.04	32.4	3464	30000	9029
2560	41.07	7.75	27.8	3536	30000	9674
2560	43.60	7.30	26.1	3561	30000	9933
2050	49.04	5.20	23.2	3678	30000	11123
2220	53.75	5.14	21.2	3681	30000	11200
2560	66.00	4.82	17.3	3698	30000	11200

IS123

Mn_2 [Nm]	i	Pn_1 [kW]	n2 [rpm]	Fr1 [N]	Fr2 D [N]	Fr2 C-L [N]
2305	71.07	4.12	16.0	3742	30000	11200
2560	87.27	3.73	13.1	3763	30000	11200
2560	112.52	2.89	10.1	3809	30000	11200
2560	123.33	2.64	9.2	3822	30000	11200
2565	133.78	2.43	8.5	3834	30000	11200
2560	151.43	2.15	7.5	3849	30000	11200
2565	177.53	1.83	6.4	3866	30000	11200
2555	194.59	1.67	5.9	3875	30000	11200

5.4 IS GEAR REDUCER - 1140 RPM

IS123

Mn_2 [Nm]	i	Pn_1 [kW]	n2 [rpm]	Fr1 [N]	Fr2 D [N]	Fr2 C-L [N]
2565	238.93	1.36	4.8	3892	30000	11200

5.5 IS GEAR REDUCER - 900 RPM

IS052

Mn_2 [Nm]	i	Pn_1 [kW]	n2 [rpm]	Fr1 [N]	Fr2 D [N]	Fr2 C-L [N]
123	8.63	1.39	104.3	683	4011	4011
137	11.14	1.20	80.8	781	4334	4334
152	13.66	1.08	65.9	842	4593	4593
174	15.27	1.11	58.9	830	4631	4631
174	16.29	1.04	55.3	866	4762	4762
174	18.63	0.91	48.3	934	5045	5045
188	21.04	0.87	42.8	953	5189	5189
188	24.07	0.76	37.4	1010	5496	5496
208	25.79	0.78	34.9	994	5476	5476
208	27.81	0.73	32.4	1024	5659	5659
208	30.00	0.67	30.0	1052	5848	5848
256	32.55	0.76	27.6	1068	5994	5994
282	36.55	0.75	24.6	1075	6000	6000
298	39.90	0.73	22.6	1084	6000	6000
298	42.63	0.68	21.1	1105	6000	6000
298	47.20	0.61	19.1	1134	6000	6000
298	52.25	0.55	17.2	1161	6000	6000
298	57.86	0.50	15.6	1184	6000	6000
298	72.83	0.40	12.4	1230	6000	6000

IS053

Mn_2 [Nm]	i	Pn_1 [kW]	n2 [rpm]	Fr1 [N]	Fr2 D [N]	Fr2 C-L [N]
300	74.20	0.40	12.1	1233	6000	6000
298	95.84	0.31	9.4	1272	6000	6000
296	117.48	0.25	7.7	1297	6000	6000
300	137.45	0.22	6.5	1313	6000	6000
300	177.55	0.17	5.1	1334	6000	6000
304	198.45	0.15	4.5	1342	6000	6000
298	217.64	0.14	4.1	1347	6000	6000
294	256.33	0.11	3.5	1356	6000	6000
292	314.21	0.09	2.9	1366	6000	6000

IS062

Mn_2 [Nm]	i	Pn_1 [kW]	n2 [rpm]	Fr1 [N]	Fr2 D [N]	Fr2 C-L [N]
238	8.00	2.89	112.5	297	6269	2508
260	9.55	2.65	94.3	392	6578	2631
282	11.71	2.34	76.9	511	7004	2802
302	13.36	2.20	67.4	561	7231	2892
324	15.94	1.98	56.5	648	7633	3053
332	19.55	1.65	46.0	775	8308	3323
338	23.18	1.42	38.8	862	8898	3559

5.5 IS GEAR REDUCER - 900 RPM

IS062

Mn_2 [Nm]	i	Pn_1 [kW]	n2 [rpm]	Fr1 [N]	Fr2 D [N]	Fr2 C-L [N]
346	25.14	1.34	35.8	894	9159	3663
346	27.66	1.22	32.5	941	9553	3821
360	30.00	1.17	30.0	960	9767	3907
510	36.57	1.36	24.6	967	9986	3994
510	39.38	1.26	22.9	998	10000	4000
510	43.64	1.14	20.6	1038	10000	4000
510	46.10	1.08	19.5	1058	10000	4000
510	53.53	0.93	16.8	1107	10000	4000
510	55.00	0.90	16.4	1115	10000	4000
510	67.47	0.73	13.3	1169	10000	4000

IS063

Mn_2 [Nm]	i	Pn_1 [kW]	n2 [rpm]	Fr1 [N]	Fr2 D [N]	Fr2 C-L [N]
510	81.43	0.62	11.1	1210	10000	4000
510	99.89	0.51	9.0	1247	10000	4000
510	126.43	0.40	7.1	1281	10000	4000
510	150.85	0.34	6.0	1302	10000	4000
515	185.05	0.28	4.9	1321	10000	4000
510	217.79	0.23	4.1	1335	10000	4000
510	267.16	0.19	3.4	1348	10000	4000

IS082

Mn_2 [Nm]	i	Pn_1 [kW]	n2 [rpm]	Fr1 [N]	Fr2 D [N]	Fr2 C-L [N]
396	7.34	5.24	122.6	1175	14112	4032
432	8.06	5.21	111.6	1188	14444	4127
470	9.94	4.59	90.5	1406	15455	4416
505	11.61	4.23	77.5	1529	16209	4631
540	12.75	4.12	70.6	1565	16623	4749
555	17.29	3.12	52.0	1910	18000	5311
555	20.14	2.68	44.7	2063	18000	5623
575	22.13	2.53	40.7	2113	18000	5795
575	24.00	2.33	37.5	2181	18000	5974
650	27.29	2.32	33.0	2190	18000	6168
650	28.67	2.20	31.4	2228	18000	6285
850	31.78	2.60	28.3	2226	18000	6433
850	34.91	2.37	25.8	2294	18000	6667
850	40.05	2.06	22.5	2383	18000	7022
850	43.05	1.92	20.9	2425	18000	7200
850	50.25	1.64	17.9	2506	18000	7200
850	54.27	1.52	16.6	2542	18000	7200
850	61.98	1.33	14.5	2597	18000	7200

5.5 IS GEAR REDUCER - 900 RPM

IS083

Mn_2 [Nm]	i	Pn_1 [kW]	n2 [rpm]	Fr1 [N]	Fr2 D [N]	Fr2 C-L [N]
850	67.52	1.25	13.3	2629	18000	7200
850	74.18	1.14	12.1	2661	18000	7200
850	91.49	0.92	9.8	2723	18000	7200
850	117.17	0.72	7.7	2781	18000	7200
850	128.73	0.66	7.0	2799	18000	7200
850	158.76	0.53	5.7	2835	18000	7200
850	184.88	0.46	4.9	2856	18000	7200
855	203.11	0.42	4.4	2868	18000	7200
850	250.50	0.34	3.6	2891	18000	7200
845	292.36	0.29	3.1	2904	18000	7200
845	315.73	0.27	2.9	2911	18000	7200
845	360.58	0.23	2.5	2920	18000	7200

IS102

Mn_2 [Nm]	i	Pn_1 [kW]	n2 [rpm]	Fr1 [N]	Fr2 D [N]	Fr2 C-L [N]
610	8.06	7.35	111.6	530	17780	5080
650	8.85	7.14	101.7	616	18268	5220
685	10.88	6.12	82.7	953	19599	5600
720	12.75	5.49	70.6	1160	20652	5901
865	13.99	6.01	64.3	988	20834	5953
940	17.21	5.31	52.3	1227	22000	6362
1010	19.00	5.17	47.4	1270	22000	6529
1010	22.13	4.44	40.7	1513	22000	6922
1080	24.28	4.32	37.1	1548	22000	7093
1080	26.33	3.99	34.2	1660	22000	7318
1080	29.87	3.51	30.1	1818	22000	7678
1280	32.40	3.84	27.8	1909	22000	7918
1195	34.91	3.33	25.8	2054	22000	8223
1280	38.30	3.25	23.5	2076	22000	8434
1110	44.00	2.45	20.4	2300	22000	9000
1365	47.13	2.82	19.1	2197	22000	9000
1110	55.14	1.96	16.3	2439	22000	9000
1365	59.40	2.23	15.2	2361	22000	9000
1365	67.84	1.96	13.3	2439	22000	9000

IS103

Mn_2 [Nm]	i	Pn_1 [kW]	n2 [rpm]	Fr1 [N]	Fr2 D [N]	Fr2 C-L [N]
1365	74.18	1.83	12.1	2486	22000	9000
1365	81.39	1.66	11.1	2530	22000	9000
1365	100.15	1.35	9.0	2616	22000	9000
1365	110.55	1.23	8.1	2651	22000	9000

5.5 IS GEAR REDUCER - 900 RPM

IS103

Mn_2 [Nm]	i	Pn_1 [kW]	n2 [rpm]	Fr1 [N]	Fr2 D [N]	Fr2 C-L [N]
1365	128.73	1.05	7.0	2699	22000	9000
1365	141.24	0.96	6.4	2725	22000	9000
1370	173.78	0.78	5.2	2774	22000	9000
1365	203.11	0.67	4.4	2805	22000	9000
1365	222.85	0.61	4.0	2821	22000	9000
1365	274.20	0.49	3.3	2853	22000	9000
1370	320.79	0.42	2.8	2873	22000	9000
1360	345.60	0.39	2.6	2881	22000	9000
1360	394.69	0.34	2.3	2894	22000	9000

IS122

Mn_2 [Nm]	i	Pn_1 [kW]	n2 [rpm]	Fr1 [N]	Fr2 D [N]	Fr2 C-L [N]
1080	8.48	12.38	106.1	2900	23269	6648
1225	9.30	12.81	96.8	2864	23372	6678
1370	11.42	11.66	78.8	2963	24689	7054
1590	12.63	12.24	71.3	2916	24586	7025
1735	13.84	12.19	65.0	2921	24815	7090
1880	16.99	10.75	53.0	3044	26428	7551
2020	21.25	9.24	42.4	3172	28448	8128
2095	23.29	8.74	38.6	3215	29267	8362
2165	26.15	8.05	34.4	3274	30000	8703
2165	28.60	7.36	31.5	3333	30000	9066
2560	30.51	8.15	29.5	3373	30000	9335
2560	33.44	7.44	26.9	3425	30000	9727
2560	35.20	7.07	25.6	3452	30000	9950
2560	41.07	6.06	21.9	3525	30000	10647
2560	43.60	5.71	20.6	3551	30000	10928
2050	49.04	4.06	18.4	3671	30000	11200
2220	53.75	4.01	16.7	3674	30000	11200
2560	66.00	3.77	13.6	3692	30000	11200

IS123

Mn_2 [Nm]	i	Pn_1 [kW]	n2 [rpm]	Fr1 [N]	Fr2 D [N]	Fr2 C-L [N]
2305	71.07	3.22	12.7	3737	30000	11200
2560	87.27	2.91	10.3	3758	30000	11200
2560	112.52	2.26	8.0	3805	30000	11200
2560	123.33	2.06	7.3	3819	30000	11200
2565	133.78	1.90	6.7	3830	30000	11200
2560	151.43	1.68	5.9	3846	30000	11200
2565	177.53	1.43	5.1	3864	30000	11200
2555	194.59	1.30	4.6	3873	30000	11200

5.5 IS GEAR REDUCER - 900 RPM

IS123

Mn_2 [Nm]	i	Pn_1 [kW]	n2 [rpm]	Fr1 [N]	Fr2 D [N]	Fr2 C-L [N]
2565	238.93	1.07	3.8	3890	30000	11200

5.6 IS GEAR REDUCER - 700 RPM

IS052

Mn_2 [Nm]	i	Pn_1 [kW]	n2 [rpm]	Fr1 [N]	Fr2 D [N]	Fr2 C-L [N]
123	8.63	1.07	81.2	674	4435	4435
137	11.14	0.93	62.8	773	4795	4795
152	13.66	0.84	51.3	835	5086	5086
174	15.27	0.86	45.8	823	5141	5141
174	16.29	0.80	43.0	859	5283	5283
174	18.63	0.70	37.6	928	5590	5590
188	21.04	0.67	33.3	947	5756	5756
188	24.07	0.59	29.1	1005	6000	6000
208	25.79	0.61	27.1	989	6000	6000
208	27.81	0.56	25.2	1019	6000	6000
208	30.00	0.52	23.3	1047	6000	6000
256	32.55	0.59	21.5	1064	6000	6000
282	36.55	0.58	19.1	1071	6000	6000
298	39.90	0.56	17.5	1081	6000	6000
298	42.63	0.53	16.4	1101	6000	6000
298	47.20	0.47	14.8	1131	6000	6000
298	52.25	0.43	13.4	1158	6000	6000
298	57.86	0.39	12.1	1182	6000	6000
298	72.83	0.31	9.6	1228	6000	6000

IS053

Mn_2 [Nm]	i	Pn_1 [kW]	n2 [rpm]	Fr1 [N]	Fr2 D [N]	Fr2 C-L [N]
300	74.20	0.31	9.4	1231	6000	6000
298	95.84	0.24	7.3	1271	6000	6000
296	117.48	0.19	6.0	1296	6000	6000
300	137.45	0.17	5.1	1312	6000	6000
300	177.55	0.13	3.9	1333	6000	6000
304	198.45	0.12	3.5	1341	6000	6000
298	217.64	0.11	3.2	1347	6000	6000
294	256.33	0.09	2.7	1356	6000	6000
292	314.21	0.07	2.2	1365	6000	6000

IS062

Mn_2 [Nm]	i	Pn_1 [kW]	n2 [rpm]	Fr1 [N]	Fr2 D [N]	Fr2 C-L [N]
238	8.00	2.24	87.5	284	6975	2790
260	9.55	2.05	73.3	380	7325	2930
282	11.71	1.81	59.8	500	7803	3121
302	13.36	1.70	52.4	551	8065	3226
324	15.94	1.53	43.9	639	8516	3407
332	19.55	1.28	35.8	767	9254	3702
338	23.18	1.10	30.2	856	9901	3960

5.6 IS GEAR REDUCER - 700 RPM

IS062

Mn_2 [Nm]	i	Pn_1 [kW]	n2 [rpm]	Fr1 [N]	Fr2 D [N]	Fr2 C-L [N]
346	25.14	1.04	27.8	888	10000	4000
346	27.66	0.94	25.3	935	10000	4000
360	30.00	0.90	23.3	954	10000	4000
510	36.57	1.05	19.1	961	10000	4000
510	39.38	0.97	17.8	993	10000	4000
510	43.64	0.88	16.0	1034	10000	4000
510	46.10	0.83	15.2	1054	10000	4000
510	53.53	0.72	13.1	1103	10000	4000
510	55.00	0.70	12.7	1111	10000	4000
510	67.47	0.57	10.4	1166	10000	4000

IS063

Mn_2 [Nm]	i	Pn_1 [kW]	n2 [rpm]	Fr1 [N]	Fr2 D [N]	Fr2 C-L [N]
510	81.43	0.48	8.6	1208	10000	4000
510	99.89	0.39	7.0	1245	10000	4000
510	126.43	0.31	5.5	1279	10000	4000
510	150.85	0.26	4.6	1300	10000	4000
515	185.05	0.21	3.8	1320	10000	4000
510	217.79	0.18	3.2	1334	10000	4000
510	267.16	0.15	2.6	1348	10000	4000

IS082

Mn_2 [Nm]	i	Pn_1 [kW]	n2 [rpm]	Fr1 [N]	Fr2 D [N]	Fr2 C-L [N]
396	7.34	4.06	95.4	1153	15474	4421
432	8.06	4.03	86.8	1166	15847	4528
470	9.94	3.56	70.4	1388	16959	4845
505	11.61	3.27	60.3	1511	17790	5083
540	12.75	3.19	54.9	1548	18000	5215
555	17.29	2.41	40.5	1898	18000	5826
555	20.14	2.07	34.8	2052	18000	6166
575	22.13	1.95	31.6	2102	18000	6355
575	24.00	1.80	29.2	2171	18000	6550
650	27.29	1.79	25.6	2180	18000	6768
650	28.67	1.71	24.4	2219	18000	6894
850	31.78	2.01	22.0	2217	18000	7063
850	34.91	1.83	20.1	2286	18000	7200
850	40.05	1.60	17.5	2376	18000	7200
850	43.05	1.49	16.3	2419	18000	7200
850	50.25	1.27	13.9	2500	18000	7200
850	54.27	1.18	12.9	2536	18000	7200
850	61.98	1.03	11.3	2592	18000	7200

5.6 IS GEAR REDUCER - 700 RPM

IS083

Mn_2 [Nm]	i	Pn_1 [kW]	n2 [rpm]	Fr1 [N]	Fr2 D [N]	Fr2 C-L [N]
850	67.52	0.97	10.4	2625	18000	7200
850	74.18	0.88	9.4	2657	18000	7200
850	91.49	0.71	7.7	2720	18000	7200
850	117.17	0.56	6.0	2778	18000	7200
850	128.73	0.51	5.4	2797	18000	7200
850	158.76	0.41	4.4	2833	18000	7200
850	184.88	0.35	3.8	2855	18000	7200
855	203.11	0.32	3.5	2867	18000	7200
850	250.50	0.26	2.8	2889	18000	7200
845	292.36	0.22	2.4	2903	18000	7200
845	315.73	0.21	2.2	2910	18000	7200
845	360.58	0.18	1.9	2919	18000	7200

IS102

Mn_2 [Nm]	i	Pn_1 [kW]	n2 [rpm]	Fr1 [N]	Fr2 D [N]	Fr2 C-L [N]
610	8.06	5.69	86.8	501	19490	5569
650	8.85	5.53	79.1	588	20031	5723
685	10.88	4.73	64.3	929	21487	6139
720	12.75	4.25	54.9	1138	22000	6469
865	13.99	4.65	50.0	964	22000	6537
940	17.21	4.11	40.7	1206	22000	6988
1010	19.00	4.00	36.8	1250	22000	7175
1010	22.13	3.43	31.6	1495	22000	7601
1080	24.28	3.35	28.8	1531	22000	7793
1080	26.33	3.09	26.6	1645	22000	8037
1080	29.87	2.72	23.4	1804	22000	8429
1280	32.40	2.97	21.6	1896	22000	8690
1195	34.91	2.58	20.1	2042	22000	9000
1280	38.30	2.51	18.3	2065	22000	9000
1110	44.00	1.90	15.9	2292	22000	9000
1365	47.13	2.18	14.8	2188	22000	9000
1110	55.14	1.51	12.7	2432	22000	9000
1365	59.40	1.73	11.8	2353	22000	9000
1365	67.84	1.51	10.3	2432	22000	9000

IS103

Mn_2 [Nm]	i	Pn_1 [kW]	n2 [rpm]	Fr1 [N]	Fr2 D [N]	Fr2 C-L [N]
1365	74.18	1.41	9.4	2480	22000	9000
1365	81.39	1.29	8.6	2525	22000	9000
1365	100.15	1.05	7.0	2612	22000	9000
1365	110.55	0.95	6.3	2647	22000	9000

5.6 IS GEAR REDUCER - 700 RPM

IS103

Mn_2 [Nm]	i	Pn_1 [kW]	n2 [rpm]	Fr1 [N]	Fr2 D [N]	Fr2 C-L [N]
1365	128.73	0.81	5.4	2696	22000	9000
1365	141.24	0.74	5.0	2722	22000	9000
1370	173.78	0.61	4.0	2772	22000	9000
1365	203.11	0.52	3.5	2803	22000	9000
1365	222.85	0.47	3.1	2819	22000	9000
1365	274.20	0.38	2.5	2851	22000	9000
1370	320.79	0.33	2.2	2871	22000	9000
1360	345.60	0.30	2.0	2880	22000	9000
1360	394.69	0.26	1.8	2893	22000	9000

IS122

Mn_2 [Nm]	i	Pn_1 [kW]	n2 [rpm]	Fr1 [N]	Fr2 D [N]	Fr2 C-L [N]
1080	8.48	9.58	82.5	2887	25726	7350
1225	9.30	9.91	75.3	2851	25898	7399
1370	11.42	9.03	61.3	2951	27388	7825
1590	12.63	9.47	55.4	2903	27364	7818
1735	13.84	9.43	50.6	2908	27673	7906
1880	16.99	8.32	41.2	3033	29485	8424
2020	21.25	7.15	32.9	3162	30000	9068
2095	23.29	6.77	30.1	3206	30000	9331
2165	26.15	6.23	26.8	3266	30000	9710
2165	28.60	5.69	24.5	3326	30000	10104
2560	30.51	6.31	22.9	3366	30000	10396
2560	33.44	5.76	20.9	3419	30000	10822
2560	35.20	5.47	19.9	3446	30000	11065
2560	41.07	4.69	17.1	3520	30000	11200
2560	43.60	4.42	16.1	3546	30000	11200
2050	49.04	3.14	14.3	3667	30000	11200
2220	53.75	3.11	13.0	3671	30000	11200
2560	66.00	2.92	10.6	3688	30000	11200

IS123

Mn_2 [Nm]	i	Pn_1 [kW]	n2 [rpm]	Fr1 [N]	Fr2 D [N]	Fr2 C-L [N]
2305	71.07	2.49	9.8	3734	30000	11200
2560	87.27	2.25	8.0	3756	30000	11200
2560	112.52	1.75	6.2	3803	30000	11200
2560	123.33	1.59	5.7	3817	30000	11200
2565	133.78	1.47	5.2	3829	30000	11200
2560	151.43	1.30	4.6	3845	30000	11200
2565	177.53	1.11	3.9	3863	30000	11200
2555	194.59	1.01	3.6	3872	30000	11200

5.6 IS GEAR REDUCER - 700 RPM

IS123

Mn_2 [Nm]	i	Pn_1 [kW]	n2 [rpm]	Fr1 [N]	Fr2 D [N]	Fr2 C-L [N]
2565	238.93	0.82	2.9	3889	30000	11200

5.7 IS GEAR REDUCER - 500 RPM

IS052

Mn_2 [Nm]	i	Pn_1 [kW]	n2 [rpm]	Fr1 [N]	Fr2 D [N]	Fr2 C-L [N]
123	8.63	0.76	58.0	666	5067	5067
137	11.14	0.66	44.9	766	5482	5482
152	13.66	0.60	36.6	829	5820	5820
174	15.27	0.61	32.7	816	5901	5901
174	16.29	0.57	30.7	853	6000	6000
174	18.63	0.50	26.8	922	6000	6000
188	21.04	0.48	23.8	942	6000	6000
188	24.07	0.42	20.8	1000	6000	6000
208	25.79	0.43	19.4	984	6000	6000
208	27.81	0.40	18.0	1015	6000	6000
208	30.00	0.37	16.7	1043	6000	6000
256	32.55	0.42	15.4	1060	6000	6000
282	36.55	0.41	13.7	1067	6000	6000
298	39.90	0.40	12.5	1077	6000	6000
298	42.63	0.37	11.7	1098	6000	6000
298	47.20	0.34	10.6	1128	6000	6000
298	52.25	0.30	9.6	1155	6000	6000
298	57.86	0.28	8.6	1179	6000	6000
298	72.83	0.22	6.9	1226	6000	6000

IS053

Mn_2 [Nm]	i	Pn_1 [kW]	n2 [rpm]	Fr1 [N]	Fr2 D [N]	Fr2 C-L [N]
300	74.20	0.22	6.7	1229	6000	6000
298	95.84	0.17	5.2	1269	6000	6000
296	117.48	0.14	4.3	1294	6000	6000
300	137.45	0.12	3.6	1311	6000	6000
300	177.55	0.09	2.8	1332	6000	6000
304	198.45	0.08	2.5	1340	6000	6000
298	217.64	0.07	2.3	1346	6000	6000
294	256.33	0.06	1.9	1355	6000	6000
292	314.21	0.05	1.6	1365	6000	6000

IS062

Mn_2 [Nm]	i	Pn_1 [kW]	n2 [rpm]	Fr1 [N]	Fr2 D [N]	Fr2 C-L [N]
238	8.00	1.59	62.5	270	8029	3212
260	9.55	1.46	52.4	368	8442	3377
282	11.71	1.29	42.7	490	8997	3599
302	13.36	1.21	37.4	541	9310	3724
324	15.94	1.09	31.4	630	9837	3935
332	19.55	0.91	25.6	759	10000	4000
338	23.18	0.78	21.6	849	10000	4000

5.7 IS GEAR REDUCER - 500 RPM

IS062

Mn_2 [Nm]	i	Pn_1 [kW]	n2 [rpm]	Fr1 [N]	Fr2 D [N]	Fr2 C-L [N]
346	25.14	0.74	19.9	882	10000	4000
346	27.66	0.67	18.1	930	10000	4000
360	30.00	0.64	16.7	949	10000	4000
510	36.57	0.75	13.7	956	10000	4000
510	39.38	0.69	12.7	988	10000	4000
510	43.64	0.62	11.5	1029	10000	4000
510	46.10	0.59	10.8	1050	10000	4000
510	53.53	0.51	9.3	1100	10000	4000
510	55.00	0.50	9.1	1108	10000	4000
510	67.47	0.40	7.4	1163	10000	4000

IS063

Mn_2 [Nm]	i	Pn_1 [kW]	n2 [rpm]	Fr1 [N]	Fr2 D [N]	Fr2 C-L [N]
510	81.43	0.34	6.1	1206	10000	4000
510	99.89	0.28	5.0	1243	10000	4000
510	126.43	0.22	4.0	1278	10000	4000
510	150.85	0.18	3.3	1299	10000	4000
515	185.05	0.15	2.7	1319	10000	4000
510	217.79	0.13	2.3	1333	10000	4000
510	267.16	0.10	1.9	1347	10000	4000

IS082

Mn_2 [Nm]	i	Pn_1 [kW]	n2 [rpm]	Fr1 [N]	Fr2 D [N]	Fr2 C-L [N]
396	7.34	2.89	68.1	1132	17494	4998
432	8.06	2.86	62.0	1145	17930	5123
470	9.94	2.53	50.3	1369	18000	5483
505	11.61	2.33	43.1	1494	18000	5754
540	12.75	2.26	39.2	1531	18000	5907
555	17.29	1.72	28.9	1885	18000	6592
555	20.14	1.47	24.8	2041	18000	6972
575	22.13	1.39	22.6	2092	18000	7186
575	24.00	1.28	20.8	2162	18000	7200
650	27.29	1.27	18.3	2171	18000	7200
650	28.67	1.21	17.4	2210	18000	7200
850	31.78	1.43	15.7	2208	18000	7200
850	34.91	1.30	14.3	2278	18000	7200
850	40.05	1.13	12.5	2369	18000	7200
850	43.05	1.06	11.6	2412	18000	7200
850	50.25	0.90	9.9	2494	18000	7200
850	54.27	0.84	9.2	2531	18000	7200
850	61.98	0.73	8.1	2588	18000	7200

5.7 IS GEAR REDUCER - 500 RPM

IS083

Mn_2 [Nm]	i	Pn_1 [kW]	n2 [rpm]	Fr1 [N]	Fr2 D [N]	Fr2 C-L [N]
850	67.52	0.69	7.4	2620	18000	7200
850	74.18	0.63	6.7	2653	18000	7200
850	91.49	0.51	5.5	2717	18000	7200
850	117.17	0.40	4.3	2776	18000	7200
850	128.73	0.36	3.9	2795	18000	7200
850	158.76	0.29	3.1	2831	18000	7200
850	184.88	0.25	2.7	2853	18000	7200
855	203.11	0.23	2.5	2865	18000	7200
850	250.50	0.19	2.0	2888	18000	7200
845	292.36	0.16	1.7	2902	18000	7200
845	315.73	0.15	1.6	2909	18000	7200
845	360.58	0.13	1.4	2918	18000	7200

IS102

Mn_2 [Nm]	i	Pn_1 [kW]	n2 [rpm]	Fr1 [N]	Fr2 D [N]	Fr2 C-L [N]
610	8.06	4.05	62.0	471	22000	6293
650	8.85	3.93	56.5	560	22000	6470
685	10.88	3.36	45.9	905	22000	6939
720	12.75	3.02	39.2	1116	22000	7312
865	13.99	3.31	35.7	941	22000	7405
940	17.21	2.92	29.1	1185	22000	7917
1010	19.00	2.84	26.3	1229	22000	8134
1010	22.13	2.44	22.6	1478	22000	8611
1080	24.28	2.38	20.6	1513	22000	8833
1080	26.33	2.19	19.0	1629	22000	9000
1080	29.87	1.93	16.7	1790	22000	9000
1280	32.40	2.11	15.4	1883	22000	9000
1195	34.91	1.83	14.3	2031	22000	9000
1280	38.30	1.79	13.1	2054	22000	9000
1110	44.00	1.35	11.4	2283	22000	9000
1365	47.13	1.55	10.6	2178	22000	9000
1110	55.14	1.08	9.1	2426	22000	9000
1365	59.40	1.23	8.4	2346	22000	9000
1365	67.84	1.08	7.4	2426	22000	9000

IS103

Mn_2 [Nm]	i	Pn_1 [kW]	n2 [rpm]	Fr1 [N]	Fr2 D [N]	Fr2 C-L [N]
1365	74.18	1.00	6.7	2474	22000	9000
1365	81.39	0.92	6.1	2520	22000	9000
1365	100.15	0.74	5.0	2607	22000	9000
1365	110.55	0.67	4.5	2643	22000	9000

5.7 IS GEAR REDUCER - 500 RPM

IS103

Mn_2 [Nm]	i	Pn_1 [kW]	n2 [rpm]	Fr1 [N]	Fr2 D [N]	Fr2 C-L [N]
1365	128.73	0.58	3.9	2692	22000	9000
1365	141.24	0.53	3.5	2718	22000	9000
1370	173.78	0.43	2.9	2769	22000	9000
1365	203.11	0.37	2.5	2801	22000	9000
1365	222.85	0.33	2.2	2817	22000	9000
1365	274.20	0.27	1.8	2850	22000	9000
1370	320.79	0.23	1.6	2870	22000	9000
1360	345.60	0.21	1.4	2878	22000	9000
1360	394.69	0.19	1.3	2892	22000	9000

IS122

Mn_2 [Nm]	i	Pn_1 [kW]	n2 [rpm]	Fr1 [N]	Fr2 D [N]	Fr2 C-L [N]
1080	8.48	6.81	59.0	2875	29386	8396
1225	9.30	7.04	53.8	2838	29662	8475
1370	11.42	6.42	43.8	2939	30000	8975
1590	12.63	6.73	39.6	2891	30000	9004
1735	13.84	6.70	36.1	2896	30000	9127
1880	16.99	5.92	29.4	3022	30000	9729
2020	21.25	5.08	23.5	3153	30000	10473
2095	23.29	4.81	21.5	3197	30000	10779
2165	26.15	4.43	19.1	3258	30000	11200
2165	28.60	4.05	17.5	3318	30000	11200
2560	30.51	4.49	16.4	3359	30000	11200
2560	33.44	4.09	14.9	3412	30000	11200
2560	35.20	3.89	14.2	3440	30000	11200
2560	41.07	3.33	12.2	3515	30000	11200
2560	43.60	3.14	11.5	3541	30000	11200
2050	49.04	2.24	10.2	3664	30000	11200
2220	53.75	2.21	9.3	3667	30000	11200
2560	66.00	2.07	7.6	3685	30000	11200

IS123

Mn_2 [Nm]	i	Pn_1 [kW]	n2 [rpm]	Fr1 [N]	Fr2 D [N]	Fr2 C-L [N]
2305	71.07	1.77	7.0	3731	30000	11200
2560	87.27	1.60	5.7	3753	30000	11200
2560	112.52	1.24	4.4	3801	30000	11200
2560	123.33	1.13	4.0	3815	30000	11200
2565	133.78	1.05	3.7	3827	30000	11200
2560	151.43	0.92	3.3	3843	30000	11200
2565	177.53	0.79	2.8	3861	30000	11200
2555	194.59	0.72	2.6	3870	30000	11200

5.7 IS GEAR REDUCER - 500 RPM

IS123

Mn_2 [Nm]	i	Pn_1 [kW]	n2 [rpm]	Fr1 [N]	Fr2 D [N]	Fr2 C-L [N]
2565	238.93	0.59	2.1	3888	30000	11200

6.1 SALES CONDITIONS

All supplies effected by Motovario are governed exclusively by the general terms of sale that you can find on our website:

http://www.motovario.com/eng/corporate/sales-conditions