CATÁLOGO TÉCNICO

S SERIES

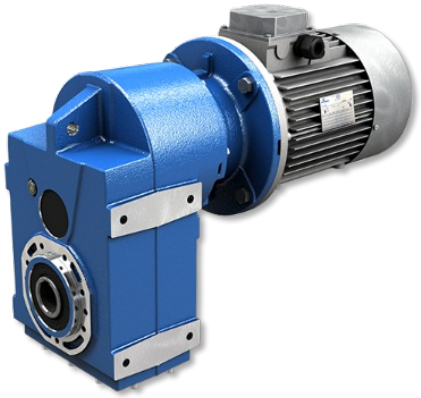

# MOTORREDUCTORES **PENDULARES**

STANDARD **IEC**

DIRECTIVA **ATEX** Ex

MOTOVARIO®

HEART OF MOTION

a TECO Group company

# ÍNDICE



## 1. INFORMACIÓN GENERAL


1.1 ATEX ..... 5

1.2 SIMBOLOGÍA Y FÓRMULAS ..... 6

1.2.1 Simbología ..... 6

1.2.2 Fórmulas ..... 7

1.3 SELECCIÓN DEL PRODUCTO ..... 8

1.4 FACTOR DE SERVICIO ..... 9

1.5 INSTALACIÓN ..... 10


## 2. INFORMACIÓN DEL PRODUCTO


2.1 CARACTERISTICAS DE CONSTRUCCIÓN ..... 11

2.2 TIPOLOGÍA ..... 12

2.2.1 Designación ..... 12

2.2.2 Versiones ..... 13

2.2.3 Modularidad ..... 14

2.3 POSICIONES DE MONTAJE ..... 15

2.3.1 Posiciones de montaje ..... 15

2.3.2 Posición caja de bornes ..... 15

2.4 POTENCIA TÉRMICA ..... 16

2.4.1 Información ..... 16

2.4.2 Controlar ..... 16

2.5 APLICACIONES CRÍTICAS ..... 17

2.5.1 Aplicaciones críticas ..... 17

2.5.2 Información ..... 17

2.6 PREDISPOSICIÓN ..... 18

2.7 RODAMIENTOS ..... 21

2.8 CARGAS RADIALES ..... 22

2.8.1 Información ..... 22

2.8.2 Entrada ..... 22

2.8.3 Salida ..... 23

2.9 LUBRICACIÓN ..... 24

2.9.1 Información ..... 24

2.9.2 Lubricantes ..... 24

# ÍNDICE




2.9.3 Lubricantes especiales ..... 25
2.9.4 Cantidad ..... 26

**2.10 MOMENTOS DE INERCIA ..... 27**

## 3. DIMENSIONES

**3.1 REDUCTORES/MOTORREDUCTORES ..... 28**
3.1.1 S 052...123 ..... 28
3.1.2 CS 052...123 ..... 29
3.1.3 IS 052...123 ..... 30

**3.2 MOTORES ELÉCTRICOS ..... 31**
3.2.1 Motores eléctricos ..... 31
3.2.2 Motores de eficiencia estándar (TS), alta (TH) y premium (TP) ..... 33
3.2.3 Potencia nominal - [kW] ..... 34

**3.3 PESO ..... 35**

**3.4 EXTREMIDAD DEL EJE ..... 36**

## 4. ACCESORIOS Y OPCIONES

**4.1 EJES LENTOS ..... 37**

**4.2 BRIDA DE SALIDA ..... 38**

**4.3 SISTEMAS DE FIJACIÓN PENDULAR ..... 39**

**4.4 DISPOSITIVO ANTIRRETORNO ..... 40**

**4.5 ARO DE APRIETE ..... 41**

**4.6 RETENES REFORZADOS ..... 42**

**4.7 KIT DE MONTAJE/DESMONTAJE ..... 43**

## 5. INFORMACIÓN DE PRESTACIONES

**5.1 S MOTORREDUCTORES (50Hz) ..... 44**

**5.2 IS REDUCTOR - 1750 RPM ..... 94**

**5.3 IS REDUCTOR - 1400 RPM ..... 99**

**5.4 IS REDUCTOR - 1140 RPM ..... 104**

# ÍNDICE



5.5 IS REDUCTOR - 900 RPM ..... 109

5.6 IS REDUCTOR - 700 RPM ..... 114

5.7 IS REDUCTOR - 500 RPM ..... 119

## 6. CONDICIONES DE VENTA

6.1 CONDICIONES DE VENTA ..... 124

# 1.1 ATEX



## Certificación ATEX

Los reductores del presente catálogo, designados “ATEX”, son diseñados y realizados en conformidad con la: Directiva **ATEX 2014/34/UE.**
Siguiendo las instrucciones del Manual Atex INSTRUCCIONES PARA LA INSTALACIÓN Y EL USO
(entregado junto a los productos suministrados), los reductores ATEX MOTOVARIO pueden utilizarse en uno de los siguientes ambientes:

**Grupo II**
**Categoría 2G y 2D**
**Zona 1/21 para gases y polvos (grupo gases IIB), con los siguientes métodos de protección:**
Protección contra ignición:
EN13463-5 (c) seguridad constructiva
EN13463-8 (k) inmersión en líquidos

**Grupo II**
**Categoría 3G y 3D**
**Zona 2/22 para gases y polvos**
Protección contra ignición:
EN13463-5 (c) seguridad constructiva

La temperatura ambiente prevista de la aplicación debe encontrarse entre -20 y + 40 °C (*).
Los productos certificados para el uso en Zona 1/21 también pueden utilizarse en Zona 2/22.
Para conocer el ambiente al que está limitada la certificación Atex del reductor específico, consultar las Tablas de Prestaciones Atex.

Los grupos clasificados de esta manera son fabricados y marcados para ser conformes con las normas contenidas en la Directiva **ATEX 2014/34/UE.**

USOS NO PERMITIDOS
Está prohibido utilizar el reductor:

- en un área con categoría de equipo I (minas sujetas a riesgos derivados del grisú);
- en una zona clasificada como más gravosa de lo marcado en la etiqueta del producto;
- a temperatura ambiente que no respete los límites previstos (*);
- en condiciones (P1, n1, M2) que, incluso en forma individual, excedan los valores indicados en las Tablas de Prestaciones Atex.

# 1.2 SIMBOLOGÍA Y FÓRMULAS



## 1.2.1 Simbología

| Dimensión física | Símbolo | Unidades de medida de símbolos | Entrada | Salida |
|---|---|---|---|---|
| Potencia | P | [kW] | $P_1$ | $P_2$ |
| Potencia requerida | Pr | [kW] | $Pr_1$ | $Pr_2$ |
| Potencia nominal | Pn | [kW] | $Pn_1$ | $Pn_2$ |
| Momento torsor | M | [Nm] | $M_1$ | $M_2$ |
| Par nominal | Mn | [Nm] | | $Mn_2$ |
| Par requerido | Mr | [Nm] | $Mr_1$ | $Mr_2$ |
| Número de revoluciones | n | [rpm] | $n_1$ | $n_2$ |
| Fuerza | F | [N] | | |
| Carga radial | Fr | [N] | $Fr_1$ | $Fr_2$ |
| Carga axial | Fa | [N] | $Fa_1$ | $Fa_2$ |
| Relación de reducción | i | | | |
| Rendimiento dinámico | $\eta_d$ | | | |
| Factor de servicio | f.s. | | | |
| Estático | s | | | |
| Dinámico | d | | | |
| Calculado | c | | | |
| Máximo | max | | | |
| Mínimo | min | | | |
| Momentos de inercia | J | [$kgm^2$] | $J_1$ | |
| Temperatura ambiente | $T_{amb}$ | [°C] | | |
| Dimensiones | | [mm] | | |

# 1.2 SIMBOLOGÍA Y FÓRMULAS

## 1.2.2 Fórmulas

| REDUCTOR | | |
|---|---|---|
| Tiempo de arranque o de parada | $t= v / a$ | [s] |
| Velocidad de rotación | $v= \pi * d * n / 60$<br>$v= \omega * r$ | [m/s] |
| Velocidad angular | $n= 60 * v / (\pi * d)$<br>$\omega= v / r$ | [rpm]<br>[rad/s] |
| Aceleración o deceleración | $a= v / t$ | [m/s$^2$] |
| Aceleración angular | $\alpha= n / (9,55 * t)$<br>$\alpha= \omega / t$ | [rad/s$^2$] |
| Espacio (en función de una aceleración o de una velocidad inicial o final) | $s= a * t^2 / 2$<br>$s= v * t /2$ | [m] |
| Fuerza de traslación sobre plano horizontal | $F= \mu * m * g$ | [N] |
| Fuerza de traslación sobre plano vertical (elevación) | $F= m * g$ | |
| Fuerza de traslación sobre plano inclinado | $F= m * g (\mu * \cos\beta + \operatorname{sen}\beta)$ | |
| m= masa [kg]; g= aceleración gravitatoria [m/s$^2$]; $\mu$= coeficiente di fricción; $\beta$= ángulo de inclinación | | |
| Momento de inercia | $J= m * v^2 / \omega^2$ | [kgm$^2$] |
| Par | $M= F * d / 2$<br>$M= J * \omega / t$ | [Nm] |

| MOTOR y MOTORREDUCTOR | | |
|---|---|---|
| Tiempo de aceleración | $ta= (Jext+Jm)*n_n/9,55+(M_{peak}-Mr)$ | [s] |
| Tiempo de frenado | $ts= (Jext+Jm)*n_n/9,55+(M_{peak}+Mr)$ | [s] |
| Ángulo de rotación del motor en aceleración | $\varphi= n_n * ta / 19,1$ | [rad] |
| Ángulo de rotación del motor en frenada | $\varphi= n_n * ts / 19,1$ | [rad] |
| Potencia disponible en el eje de un motor monofásico | $P= V * I * \eta *\cos\omega$ | [W] |
| Potencia disponible en el eje de un motor trifásico | $P= 1,73 * V * I * \eta * \cos\omega$ | [W] |

| FUNCIONAMIENTO a 60Hz | | |
|---|---|---|
| Velocidad angular a 60Hz | $n_{60Hz}= 1,2 * n_{50Hz}$ | [rpm] |
| Potencia a 60Hz | $P1_{60Hz}= P1_{50Hz} * V_{60Hz}/V_{50Hz}$ | [kW] |
| Si la tensión de alimentación $V_{60Hz}$ es igual a la del bobinado $V_{50Hz}$, la potenza no varía<br>$P1_{60Hz}= P1_{50Hz}$<br>Si la tensión de alimentazión $V_{60Hz}$ es mayor del 20% de la del bobinado $V_{50Hz}$, la potencia aumenta un 20%<br>$P1_{60Hz}= 1,2\ P1_{50Hz}$ | | |
| Par a 60Hz | $M_{60hz}= M_{50Hz} * P1_{60Hz} / (1,2 * P1_{50Hz})$ | [Nm] |
| Factor de servicio a 60Hz | $f.s_{60Hz}= f.s_{50Hz} * 1,175 * P1_{50Hz} / P1_{60Hz}$ | - |

# 1.3 SELECCIÓN DEL PRODUCTO



Para la correcta selección de un motorreductor es necesario disponer de algunos datos fundamentales como:

1. La velocidad angular a la entrada del reductor **($n_1$)** y la velocidad angular a la salida **($n_2$)**. Através de estos dos valores es posible calcular la relación de reducción (i) del reductor utilizando la fórmula: **$i=n_1/n_2$**
2. El momento de torsión requerido por la aplicación **($Mr_2$)**.

Conocidos estos datos, se puede proceder a la selección del motorreductor o del reductor.
Esta guía conduce a la selección del producto mediante pocos pasos:

**Selección de los motorreductores**

1. Determinar el factor de servicio efectivo de la aplicación **(f.s.)**. Este parámetro es función del tipo de carga de la máquina accionada, del número de accionamientos por hora y de la cantidad de horas de funcionamiento (ver el párrafo "Factor de servicio").
2. Obtener la potencia a la entrada **$Pr_1$** utilizando el momento de torsión requerido **$Mr_2$**, la velocidad **$n_2$** y el rendimiento dinámico. **$Pr_1=(Mr_2*n_2)/(9550*\eta_d)$**. El valor del rendimiento dinámico depende del tipo de reductor y del número de etapas de engranajes de reducción. (Para obtener el valor del rendimiento).
3. Consultar las tablas de las prestaciones de los motorreductores buscando una potencia normalizada **$Pn_1$** superior a la requerida **$Pr_1$** tal que: **$Pn_1 \geq Pr_1$**
4. Una vez identificada la potencia nominal adecuada, seleccionar el motorreductor capaz de desarrollar la velocidad angular más cercana a la $n_2$ deseada y con un factor de servicio f.s. mayor o igual que el necesario para la aplicación.

**Para seleccionar productos Atex utilizar el factor de servicio "f.s. Atex".**

En las tablas de selección de los motorreductores, las combinaciones se realizan con motores 2,4,6 polos (50Hz).

**Selección de los reductores**

1. Determinar el factor de servicio de la aplicación **(f.s.)** (ver el párrafo "Factor de servicio").
2. Calcular la relación de reducción i entre la velocidad de salida $n_2$ requerida y la de entrada **n1**. **$i=n_1/n_2$**
3. Calcular el momento de torsión $Mc_2$ para seleccionar el reductor a través del par necesario para la apalicación $Mr_2$ y factor de servicio f.s.: **$Mc_2=Mr_2*(f.s.)$**
4. Consultar las tablas de Prestaciones de los Reductores buscando el reductor que, con la relación de reducción más cercana a la calculada, cuente con un par nominal **$Mn_2$** tal que: **$Mn_2 \geq Mc_2$**

**Para la selección de productos Atex consultar las Tablas de Prestaciones de Reductores Atex.**

**Verificaciones**

Una vez realizada la selección del reductor o del motorreductor es conveniente efectuar las siguientes verificaciones:

A. **Potencia Térmica:** La potencia térmica del reductor debe ser mayor o igual que la potencia mecánica instalada o que la potencia requerida por la aplicación según las indicaciones contenidas en la sección (ver el párrafo "Potencia térmica").

B. **Par Máximo**: Generalmente el par máximo (pico de carga instantáneo) que se puede aplicar al reductor no debe superar el 200% del par nominal **$Mn_2$** (ATEX - $M_2$max).

C. **Cargas Radiales**

1. Verificar que las cargas radiales que actúan sobre los árboles de entrada y/o de salida respeten los valores admitidos según el catálogo. Si son mayores, aumentar el tamaño del reductor o modificar la capacidad de soportar la carga externa. En la fase de verificación, es necesario tener en cuenta que los valores indicados en el catálogo se refieren a cargas que actúan sobre la línea media de la parte saliente del árbol por lo que, cuando la carga esté aplicada en una posición diferente, es necesario determinar la carga admisible en la posición deseada con las fórmulas correspondientes (ver el párrafo "Cargas Radiales").
2. En caso de ejes accesorios en salida, controlar que la carga aplicada sea compatible con el tamaño del eje. En caso de necesidad, contactar la ASISTENCIA TÉCNICA MOTOVARIO.

D. Si el reductor seleccionado se combina con un motor eléctrico, verificar su aplicabilidad consultando la tabla de predisposiciones (ver párrafo "Predisposiciones"). Para motores de dimensiones mayor a IEC 180, verificar la necesidad de soportar el motor con las patas, En caso de necesidad contactar con la ASISTENCIA TÉCNICA MOTOVARIO.

**(sólo versión Atex)** Consultar el catálogo para verificar que la Versión, Pos. Montaje y Accesorios previstos satisfagan la certificación Atex requerida.

# 1.4 FACTOR DE SERVICIO



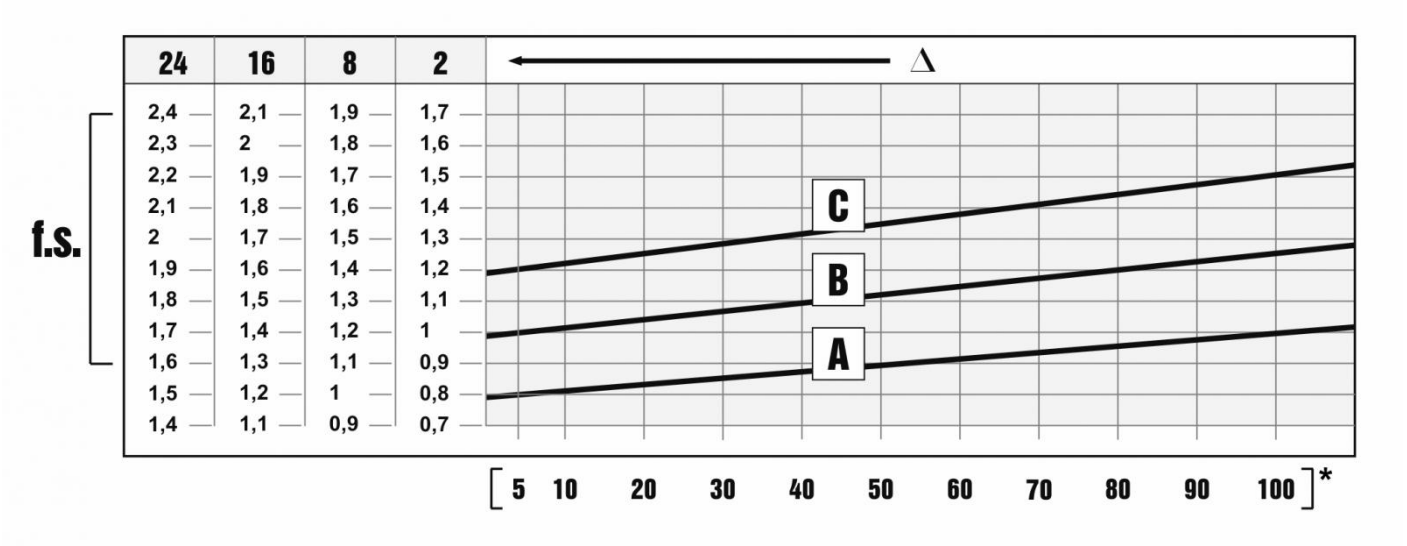


El factor de servicio f.s. depende de las condiciones de funcionamiento a las cuales está sometido el reductor.
Los parámetros que deben ser considerados para una correcta selección del factor de servicio son:

- tipo de carga de la máquina accionada: A - B - C
- duración de funcionamiento diario: horas/día (Δ)
- frecuencia de arranques: arr/hora (*)

**CARGA:**

- **A** - uniforme = fa ≤ 0,3
- **B** - sobrecarga media = fa ≤ 3
- **C** - sobrecarga fuerte = fa ≤ 10

**fa = Je/Jm**

- Je [$kgm^2$] inercia externa reducida al eje motor
- Jm [$kgm^2$] inercia motor

En caso de fa > 10, ponerse en contacto con nuestro Servicio Técnico.

A. Tornillos de Arquímedes para materiales ligeros, ventiladores, líneas de montaje, cintas transportadoras para materiales ligeros, pequeños agitadores, elevadores, máquinas limpiadoras, máquinas llenadoras, máquinas comprobadoras, cintas trasportadoras.
B. Dispositivos de enrollado, alimentadores de las máquinas para la madera, montacargas, equilibradores, roscadoras, agitadores medios y mezcladores, cintas transportadoras para materiales pesados, cabrestantes, puertas corredizas, raspadores de abono, máquinas empaquetadoras, hormigoneras, mecanismos para el movimiento de las grúas, fresadoras, plegadoras, bombas de engranajes.
C. Agitadores para materiales pesados, cizallas, prensas, centrifugadoras, soportes rotativos, cabrestantes y elevadores para materiales pesados, tornos para la rectificación, molinos de piedras, elevadores de cangilones, perforadoras, moledores a percusión, prensas de excéntrica, plegadoras, mesas giratorias, pulidoras, vibradores, cortadoras.

# 1.5 INSTALACIÓN



**Para la instalación del reductor, atenerse a las siguientes indicaciones:**

- Para evitar las vibraciones, la fijación sobre la máquina tiene que ser estable.
- Antes del montaje del grupo sobre la máquina, controlar que el sentido de rotación del eje de salida del reductor sea correcto.
- En caso de periodos de almacenamiento muy largos (4/6 meses), si el retén no está sumergido en el lubricante contenido en el grupo, se aconseja su reemplazo porque la goma podría estar pegada al eje o haber perdido las características de elasticidad necesarias para un funcionamiento correcto.
- Siempre que sea posible, proteger el reductor contra los rayos del sol y la intemperie.
- Controlar que la refrigeración del motor sea suficiente, asegurando una correcta transferencia de aire del lado ventilador.
- En caso de temperatura ambiente de < -5°C o > +40°C, ponerse en contacto con el Servicio técnico.
- El montaje de distintos órganos (poleas, ruedas dentadas, acoplamientos, ejes, etc.) sobre los ejes debe ser efectuado utilizando los agujeros roscados correspondientes u otros sistemas, asegurando una manipulación correcta sin correr el riesgo de dañar los cojinetes o las partes externas de los grupos.
- Lubricar las superficies en contacto para evitar gripajes u oxidaciones.
- La pintura no debe cubrir las partes de goma y los agujeros de los posibles tapones respiraderos.
- Para los grupos equipados de tapones de aceite, reemplazar el tapón cerrado, utilizado durante el transporte, por el tapón respiradero.
- Controlar el correcto nivel de lubricante mediante la mirilla (si la hay).
- La puesta en marcha se debe producir de manera gradual evitando la aplicación súbita de la carga máxima.
- Si bajo el reductor hay mecanismos, cosas ó materiales que puedan dañarse por una eventual pérdida de aceite, deberá preverse una protección adecuada.

**Montaje motor en bridas pam**

Si el equipo se suministra sin motor es preciso observar las siguientes recomendaciones para garantizar un correcto montaje del motor eléctrico.Verificar que la tolerancia del eje y de la brida motor se correspondan al menos a una clase de calidad “normal”. Limpiar cuidadosamente el eje, el centraje y el plano de asiento de restos de pintura o suciedad. Proceder al montaje del semiacoplamiento/manguito en el eje del motor eléctrico sin excesiva fuerza, si no entra con suavidad verificar la correcta tolerancia de la chaveta del motor (ver imagen), utilizar en cualquier caso métodos de montaje que no dañen los rodamientos del motor. Proceder a continuación al montaje del motor con el semiacoplamiento en el reductor, evitando la interferencia de los dientes del acoplamiento. No se prevé ninguna adaptación de la chaveta del motor.

En caso de grupos Atex, montar la junta (debe solicitarse a Motovario) interponiéndola entre la brida PAM y el motor.

**Acoplamento elástico**

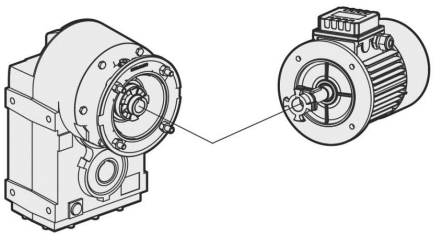

**Manguito PAM**

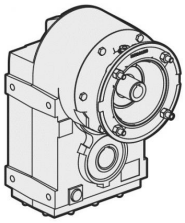

# 2.1 CARACTERISTICAS DE CONSTRUCCIÓN



Los productos Motovario se entregan con el siguiente acabado superficial.

**Unidades con cajas de fundición gris:**
- Las cajas se pintan siempre.

**Especificaciones pintura:**
- Epoxipoliéster Azul Marino RAL5010. Polvo termoestable a base de resinas poliéster, modificadas con resina epoxídica.

**Propiedades mecánicas:**
- Las pruebas realizadas con las chapas finas Unichim desengrasadas con grosor del film de 60 micrones han satisfecho las siguientes exigencias: adherencia (ISO2409).

**Resistencia al calor:**
- 24 HORAS A 150°C.

**Resistencia a la corrosión:**
- Niebla salina ASTM B 117/97 de 100 a 500 horas en función del tratamiento preliminar del soporte.

**Prestaciones:**
- Capacidad de carga verificada según DIN 3990, ISO 6336, AGMA 2101, ISO 10300, DIN 3991, ISO 281, DIN 743.

**Rendimiento η:**
- El rendimiento de funcionamiento es la relación entre la potencia suministrada a la salida $P_2$ y la absorbida por el reductor $P_1$: $\eta = P_2/P_1$.

Los reductores pendulares de la serie S presentan un valor medio igual a:
S..2 trenes = 0,96
S..3 trenes = 0,94

# 2.2 TIPOLOGÍA

## 2.2.1 Designación

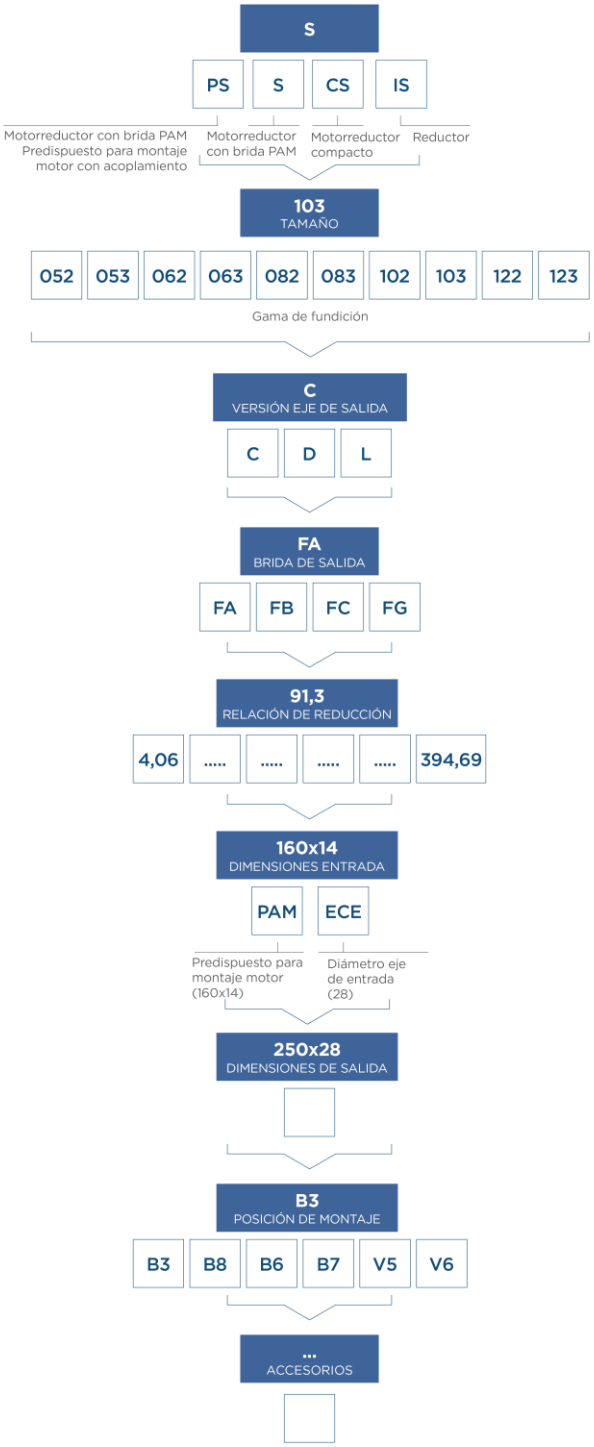

# 2.2 TIPOLOGÍA

## 2.2.2 Versiones

**S... C - S... D - S... L**

**S.. C** FIJACIÓN PATAS-BRIDA / EJE HUECO

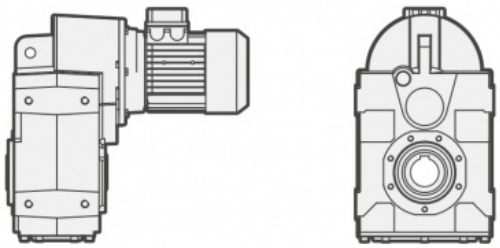

**S.. D** FIJACIÓN PATAS-BRIDA / EJE MACIZO D

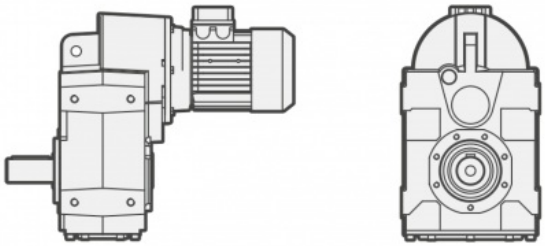

**S.. L** FIJACIÓN PATAS-BRIDA / EJE HUECO CON ARO DE APRIETE

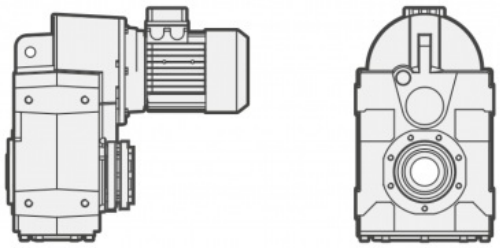

REDUCTORES ATEX

LA VERSIÓN SL SE ENCUENTRA DISPONIBLE SOLO PARA CERTIFICACION 3G/3D

## 2.2.3 Modularidad

**S** SERIE EN FUNDICIÓN GRIS

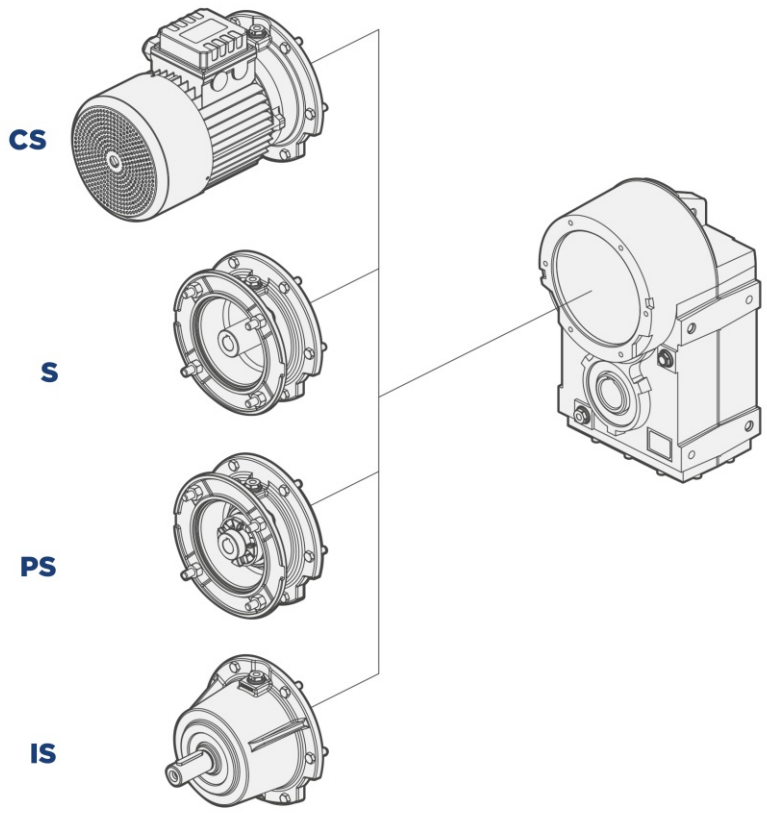


**CS**
Versión motorreductor compacto

**S**
Versión motorreductor (PAM)

**PS**
Predispuesto para montaje motor con acoplamiento

**IS**
Versión con eje macho de entrada

# 2.3 POSICIONES DE MONTAJE

## 2.3.1 Posiciones de montaje

Siempre que sea posible utilizar la posición de montaje B3, que desde el punto de vista técnico garantiza mejor batida del aceite, mejor lubricación y menor calentamiento.

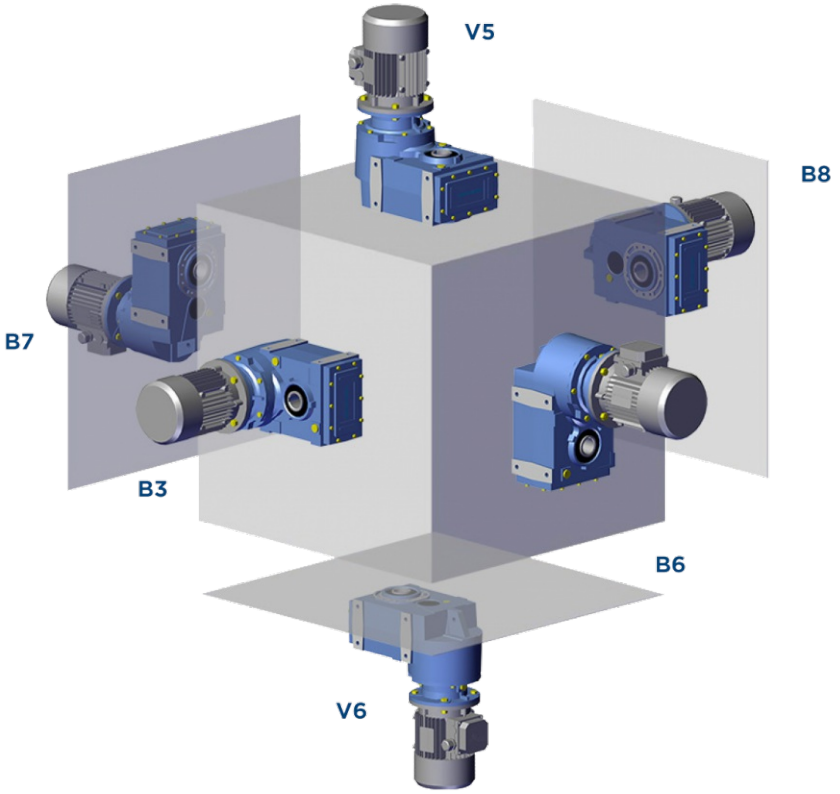


## 2.3.2 Posición caja de bornes

De no especificarse lo contrario en el pedido, el motorreductor se monta con caja de bornes en posición 1.

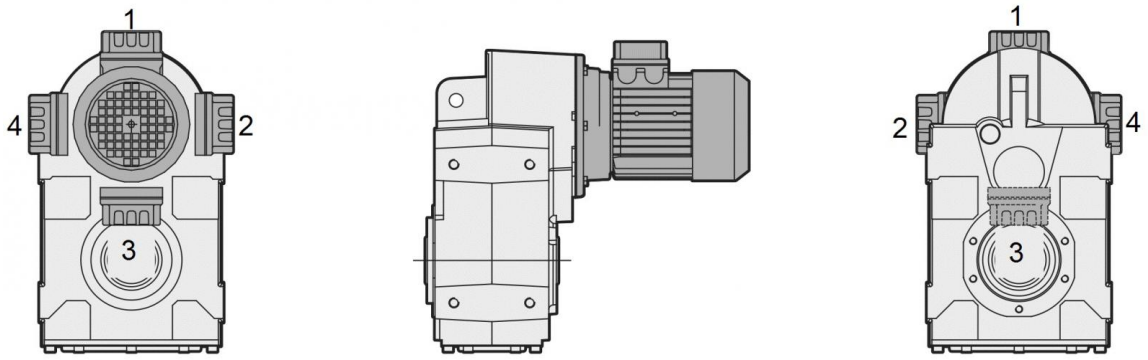

# 2.4 POTENCIA TÉRMICA

## 2.4.1 Información

La siguiente tabla contiene los valores de potencia térmica nominal expresada Pth en kW en las siguientes condiciones de referencia:

- posición de montaje B3
- funcionamiento continuo con velocidad de entrada <= 1500 rpm
- temperatura ambiente de $T_{amb}$=25°C
- altura sobre el nivel del mar
- velocidad del aire en torno al reductor >= 1m/s
- ausencia de cargas radiales y/o axiales externas

| $n_1$ = 1500rpm | |
|---|---|
| | **Pth [kW]** |
| S052 | 7 |
| S062 | 9,5 |
| S082 | 15,5 |
| S102 | 20,5 |
| S122 | 34,5 |

**En las condiciones de referencia mencionadas, aplicando al reductor una potencia no mayor que la Pth, se garantiza una correcta lubricación y el buen funcionamiento del reductor (T aceite max=95°C).**

NOTA: Las versiones de los reductores con tres etapas de reducción no necesitan la verificación de la potencia térmica ya que no se alcanzan los límites térmicos.

## 2.4.2 Controlar

**Controlar la aplicación**

Salvo cuando los tiempos de funcionamiento continuo son menores que dos horas y se producen pausas capaces de llevar el reductor a la temperatura ambiente, para cada aplicación es perentorio realizar la verificación del límite térmico del reductor, según la siguiente fórmula: **$P_1$ < Pth * Fc * Fv * Fa ,** donde:

- $P_1$ = potencia a la entrada del reductor [kW]
- Pth = potencia térmica en condiciones de referencia [kW] (ver la tabla de arriba)
- Fc = factor de corrección de la temperatura ambiente y servicio
- Fv = factor de corrección de aireación
- Fa = factor de corrección de la altitud

Los factores de corrección son relativos a condiciones operativas diferentes a las de referencia y se encuentran en las siguientes tablas ISO14179:

| | | Servicio con carga por hora de funcionamiento | | | | |
|---|---|---|---|---|---|---|
| | Fc | 100 | 80 | 70 | 40 | 20 |
| Temperatura ambiente °C | 10 | 1,15 | 1,21 | 1,32 | 1,55 | 2,07 |
| | 18 | 1,07 | 1,12 | 1,23 | 1,44 | 1,93 |
| | 25 | 1,00 | 1,05 | 1,15 | 1,35 | 1,80 |
| | 30 | 0,93 | 0,98 | 1,07 | 1,26 | 1,67 |
| | 40 | 0,83 | 0,87 | 0,95 | 1,12 | 1,49 |
| | 43 | 0,75 | 0,79 | 0,86 | 1,01 | 1,35 |
| | 50 | 0,67 | 0,70 | 0,77 | 0,90 | 1,21 |

| Altitud (m) | Fa |
|---|---|
| 0* | 1 |
| 750 | 0,95 |
| 1500 | 0,9 |
| 2250 | 0,85 |
| 3000 | 0,81 |

| Velocidad del aire ambiental | Fv |
|---|---|
| Aire estancado (<0,5 m/s) | 0.75 |
| Instalación cubierta con poca aireación | 1 |
| Instalación cubierta con buena aireación (>1,4 m/s) | 1.4 |
| Instalación al aire libre (>3,7 m/s) | 1.9 |

*Nivel del mar

En el caso de funcionamiento con velocidades de entrada mayores que 2000 rpm o temperaturas ambiente mayores que 40°C es aconsejable llamar a nuestro servicio de asistencia técnica.

# 2.5 APLICACIONES CRÍTICAS

## 2.5.1 Aplicaciones críticas

| S | 050 | 060 | 080 | 100 | 125 |
|---|---|---|---|---|---|
| 2000 < n1 < 3000 | ✔ | ✔ | ✔ | B | B |
| V6 | B | B | B | B | B |
| n1 > 3000 | B | B | B | A | A |
| ...L : V5 - V6 | B | B | B | B | B |
| (*) ...L | B | B | B | B | B |

✔ Aplicación verificada
A Aplicación desaconsejada
B Controlar la aplicación y/o ponerse en contacto con nuestro servicio técnico

(*) El aro de apriete está diseñado solo para transmitir el par de salida.
En caso posiciones de montaje con cargas radiales y/o axiales contacte con el servicio técnico.

## 2.5.2 Información

Las prestaciones indicadas en el catálogo corresponden a la posición B3 o similar, cuando el primer tren de engranajes no está completamente sumergido en el aceite. Para posiciones de montaje distintas y/o de velocidades particulares de entrada, atenerse a las
tablas que ponen en evidencia las distintas situaciones críticas por cada tamaño de reductor. Además es necesario considerar y evaluar cuidadosamente las siguientes aplicaciones, poniéndose en contacto con nuestro Servicio Técnico:

- Evitar la utilización como multiplicador.
- Utilización en servicios que, en caso de ruptura del reductor, podrían resultar peligrosos para personas.
- Aplicaciones con inercias particularmente elevadas.
- Utilización como cabrestante de levantamiento.
- Aplicaciones con esfuerzos dinámicos elevados sobre la carcasa del reductor.
- Utilización en ambiente con $T_{amb}$ inferior a -5°C o superior a 40°C.
- Utilización en ambiente con presencia de agentes químicos agresivos.
- Utilización en ambiente salino.
- Posiciones de montaje no previstas en el catálogo.
- Utilización en ambiente radioactivo.
- Utilización en ambiente con presión distinta de la atmosférica.

Evitar aplicaciones donde está prevista la inmersión, aún parcial, del reductor.
En presencia de sobrecargas, debidas a arranques a plena carga, frenadas, colisiones y otras causas estáticas y dinámicas, verificar siempre que el pico de momento torsor sea siempre inferior a $2*Mn_2$.

# 2.6 PREDISPOSICIÓN



**B11** = Versión motorreductor compacto.
Rogamos considerar que tratase de tablas de combinaciones posibles. Verifiquen el factor de servicio.
*Para motor tamaño 063 no existe la versión PB.

Nota Motorreductores Atex (versiones con motor eléctrico compacto B11): se encuentran disponibles sólo para certificación 3G/3D.

| CS - S - PS 052 | | | | |
|---|---|---|---|---|
| i | 071 | 080 | 090 | 100-112 |
| 8,63 | B5-B11 | B5-B11 | B5-B11 | B5-B11 |
| 11,14 | B5-B11 | B5-B11 | B5-B11 | B5-B11 |
| 12,00 | B5-B11 | B5-B11 | B5-B11 | B5-B11 |
| 13,66 | B5-B11 | B5-B11 | B5-B11 | B5-B11 |
| 15,27 | B5-B11 | B5-B11 | B5-B11 | B5-B11 |
| 16,29 | B5-B11 | B5-B11 | B5-B11 | B5-B11 |
| 18,63 | B5-B11 | B5-B11 | B5-B11 | B5-B11 |
| 19,73 | B5-B11 | B5-B11 | B5-B11 | B5-B11 |
| 21,04 | B5-B11 | B5-B11 | B5-B11 | B5-B11 |
| 21,53 | B5-B11 | B5-B11 | B5-B11 | B5-B11 |
| 24,07 | B5-B11 | B5-B11 | B5-B11 | B5-B11 |
| 25,20 | B5-B11 | B5-B11 | B5-B11 | B5-B11 |
| 25,79 | B5-B11 | B5-B11 | B5-B11 | B5-B11 |
| 27,81 | B5-B11 | B5-B11 | B5-B11 | B5-B11 |
| 30,00 | B5-B11 | B5-B11 | B5-B11 | |
| 32,55 | B5-B11 | B5-B11 | B5-B11 | B5-B11 |
| 33,00 | B5-B11 | B5-B11 | B5-B11 | |
| 34,09 | B5-B11 | B5-B11 | B5-B11 | B5-B11 |
| 36,55 | B5-B11 | B5-B11 | B5-B11 | |
| 38,75 | B5-B11 | B5-B11 | B5-B11 | |
| 39,90 | B5-B11 | B5-B11 | B5-B11 | B5-B11 |
| 42,63 | B5-B11 | B5-B11 | B5-B11 | |
| 46,00 | B5-B11 | B5-B11 | B5-B11 | |
| 47,20 | B5-B11 | B5-B11 | B5-B11 | |
| 52,25 | B5-B11 | B5-B11 | B5-B11 | |
| 57,86 | B5-B11 | B5-B11 | B5-B11 | |
| 59,42 | B5-B11 | B5-B11 | B5-B11 | |
| 72,83 | B5-B11 | B5-B11 | B5-B11 | |

| CS - S - PS 053 | | | | |
|---|---|---|---|---|
| i | *063 | 071 | 080 | 090 |
| 36,50 | B5-B11 | B5-B11 | B5-B11 | B5-B11 |
| 47,14 | B5-B11 | B5-B11 | B5-B11 | B5-B11 |
| 57,79 | B5-B11 | B5-B11 | B5-B11 | B5-B11 |
| 63,74 | B5-B11 | B5-B11 | B5-B11 | B5-B11 |
| 78,14 | B5-B11 | B5-B11 | B5-B11 | B5-B11 |
| 74,20 | B5-B11 | B5-B11 | B5-B11 | B5-B11 |
| 95,84 | B5-B11 | B5-B11 | B5-B11 | B5-B11 |
| 117,48 | B5-B11 | B5-B11 | B5-B11 | B5-B11 |
| 137,45 | B5-B11 | B5-B11 | B5-B11 | B5-B11 |
| 177,55 | B5-B11 | B5-B11 | B5-B11 | B5-B11 |
| 198,45 | B5-B11 | B5-B11 | B5-B11 | |
| 217,64 | B5-B11 | B5-B11 | B5-B11 | B5-B11 |
| 256,33 | B5-B11 | B5-B11 | B5-B11 | |
| 314,21 | B5-B11 | B5-B11 | B5-B11 | |

# 2.6 PREDISPOSICIÓN



| CS - S - PS 062 | | | | |
|---|---|---|---|---|
| i | 071 | 080 | 090 | 100-112 |
| 8,00 | | B5-B11 | B5-B11 | B5-B11 |
| 8,92 | | B5-B11 | B5-B11 | B5-B11 |
| 9,55 | | B5-B11 | B5-B11 | B5-B11 |
| 10,65 | | B5-B11 | B5-B11 | B5-B11 |
| 11,71 | | B5-B11 | B5-B11 | B5-B11 |
| 13,06 | | B5-B11 | B5-B11 | B5-B11 |
| 13,36 | | B5-B11 | B5-B11 | B5-B11 |
| 15,94 | | B5-B11 | B5-B11 | B5-B11 |
| 16,16 | | B5-B11 | B5-B11 | B5-B11 |
| 19,29 | | B5-B11 | B5-B11 | B5-B11 |
| 19,55 | | B5-B11 | B5-B11 | B5-B11 |
| 23,18 | B5-B11 | B5-B11 | B5-B11 | B5-B11 |
| 23,75 | B5-B11 | B5-B11 | B5-B11 | B5-B11 |
| 25,14 | B5-B11 | B5-B11 | B5-B11 | B5-B11 |
| 27,66 | B5-B11 | B5-B11 | B5-B11 | B5-B11 |
| 30,00 | B5-B11 | B5-B11 | B5-B11 | B5-B11 |
| 33,93 | B5-B11 | B5-B11 | B5-B11 | B5-B11 |
| 36,57 | B5-B11 | B5-B11 | B5-B11 | B5-B11 |
| 39,38 | B5-B11 | B5-B11 | B5-B11 | B5-B11 |
| 43,64 | B5-B11 | B5-B11 | B5-B11 | B5-B11 |
| 46,10 | B5-B11 | B5-B11 | B5-B11 | |
| 48,30 | B5-B11 | B5-B11 | B5-B11 | B5-B11 |
| 53,53 | B5-B11 | B5-B11 | B5-B11 | B5-B11 |
| 55,00 | B5-B11 | B5-B11 | B5-B11 | |
| 67,47 | B5-B11 | B5-B11 | B5-B11 | |

| CS - S - PS 063 | | | |
|---|---|---|---|
| i | 071 | 080 | 090 |
| 33,57 | B5-B11 | B5-B11 | B5-B11 |
| 37,77 | B5-B11 | B5-B11 | B5-B11 |
| 40,05 | B5-B11 | B5-B11 | B5-B11 |
| 49,13 | B5-B11 | B5-B11 | B5-B11 |
| 55,29 | B5-B11 | B5-B11 | B5-B11 |
| 58,72 | B5-B11 | B5-B11 | B5-B11 |
| 65,85 | B5-B11 | B5-B11 | B5-B11 |
| 68,25 | B5-B11 | B5-B11 | B5-B11 |
| 73,63 | B5-B11 | B5-B11 | B5-B11 |
| 81,43 | B5-B11 | B5-B11 | B5-B11 |
| 99,89 | B5-B11 | B5-B11 | B5-B11 |
| 126,43 | B5-B11 | B5-B11 | B5-B11 |
| 150,85 | B5-B11 | B5-B11 | B5-B11 |
| 182,53 | B5-B11 | B5-B11 | B5-B11 |
| 185,05 | B5-B11 | B5-B11 | B5-B11 |
| 217,79 | B5-B11 | | |
| 267,16 | B5-B11 | | |

| CS - S - PS 082 | | | | |
|---|---|---|---|---|
| i | 080 | 090 | 100-112 | 132 |
| 7,34 | B5-B11 | B5-B11 | B5-B11 | B5-B11 |
| 8,06 | B5-B11 | B5-B11 | B5-B11 | B5-B11 |
| 9,94 | B5-B11 | B5-B11 | B5-B11 | B5-B11 |
| 11,61 | B5-B11 | B5-B11 | B5-B11 | B5-B11 |
| 12,75 | B5-B11 | B5-B11 | B5-B11 | B5-B11 |
| 14,04 | B5-B11 | B5-B11 | B5-B11 | B5-B11 |
| 15,43 | B5-B11 | B5-B11 | B5-B11 | B5-B11 |
| 15,73 | B5-B11 | B5-B11 | B5-B11 | B5-B11 |
| 17,29 | B5-B11 | B5-B11 | B5-B11 | B5-B11 |
| 19,03 | B5-B11 | B5-B11 | B5-B11 | B5-B11 |
| 20,14 | B5-B11 | B5-B11 | B5-B11 | B5-B11 |
| 22,13 | B5-B11 | B5-B11 | B5-B11 | B5-B11 |
| 24,00 | B5-B11 | B5-B11 | B5-B11 | B5-B11 |
| 26,05 | B5-B11 | B5-B11 | B5-B11 | B5-B11 |
| 27,29 | B5-B11 | B5-B11 | B5-B11 | B5-B11 |
| 28,67 | B5-B11 | B5-B11 | B5-B11 | B5-B11 |
| 29,60 | B5-B11 | B5-B11 | B5-B11 | B5-B11 |
| 31,78 | B5-B11 | B5-B11 | B5-B11 | B5-B11 |
| 34,91 | B5-B11 | B5-B11 | B5-B11 | B5-B11 |
| 35,50 | B5-B11 | B5-B11 | B5-B11 | |
| 40,05 | B5-B11 | B5-B11 | B5-B11 | B5-B11 |
| 43,05 | B5-B11 | B5-B11 | B5-B11 | B5-B11 |
| 50,25 | B5-B11 | B5-B11 | B5-B11 | |
| 54,27 | B5-B11 | B5-B11 | B5-B11 | |
| 61,98 | B5-B11 | B5-B11 | B5-B11 | |

| CS - S - PS 083 | | | | |
|---|---|---|---|---|
| i | 071 | 080 | 090 | 100-112 |
| 67,52 | | B5-B11 | B5-B11 | B5-B11 |
| 74,18 | | B5-B11 | B5-B11 | B5-B11 |
| 81,71 | | B5-B11 | B5-B11 | B5-B11 |
| 91,49 | | B5-B11 | B5-B11 | B5-B11 |
| 100,62 | | B5-B11 | B5-B11 | B5-B11 |
| 117,17 | B5-B11 | B5-B11 | B5-B11 | |
| 128,73 | B5-B11 | B5-B11 | B5-B11 | |
| 136,34 | B5-B11 | B5-B11 | B5-B11 | B5-B11 |
| 158,76 | B5-B11 | B5-B11 | B5-B11 | |
| 184,88 | B5-B11 | B5-B11 | B5-B11 | |
| 203,11 | B5-B11 | B5-B11 | B5-B11 | |
| 205,34 | B5-B11 | B5-B11 | B5-B11 | B5-B11 |
| 226,04 | B5-B11 | B5-B11 | B5-B11 | B5-B11 |
| 250,50 | B5-B11 | B5-B11 | B5-B11 | |
| 266,13 | B5-B11 | B5-B11 | B5-B11 | |
| 292,36 | B5-B11 | B5-B11 | B5-B11 | |
| 315,73 | B5-B11 | B5-B11 | B5-B11 | |
| 360,58 | B5-B11 | B5-B11 | B5-B11 | |

# 2.6 PREDISPOSICIÓN



| CS - S - PS 102 | | | | | |
|---|---|---|---|---|---|
| i | 080 | 090 | 100-112 | 132 | 160 |
| 8,06 | B5-B11 | B5-B11 | B5-B11 | B5-B11 | B5 |
| 8,85 | B5-B11 | B5-B11 | B5-B11 | B5-B11 | B5 |
| 10,88 | B5-B11 | B5-B11 | B5-B11 | B5-B11 | B5 |
| 12,75 | B5-B11 | B5-B11 | B5-B11 | B5-B11 | B5 |
| 13,99 | B5-B11 | B5-B11 | B5-B11 | B5-B11 | B5 |
| 15,43 | B5-B11 | B5-B11 | B5-B11 | B5-B11 | |
| 17,21 | B5-B11 | B5-B11 | B5-B11 | B5-B11 | B5 |
| 19,00 | B5-B11 | B5-B11 | B5-B11 | B5-B11 | |
| 20,83 | B5-B11 | B5-B11 | B5-B11 | B5-B11 | |
| 22,13 | B5-B11 | B5-B11 | B5-B11 | B5-B11 | |
| 24,28 | B5-B11 | B5-B11 | B5-B11 | B5-B11 | |
| 26,33 | B5-B11 | B5-B11 | B5-B11 | B5-B11 | |
| 29,87 | B5-B11 | B5-B11 | B5-B11 | B5-B11 | |
| 32,40 | B5-B11 | B5-B11 | B5-B11 | B5-B11 | |
| 34,91 | B5-B11 | B5-B11 | B5-B11 | B5-B11 | |
| 38,30 | B5-B11 | B5-B11 | B5-B11 | B5-B11 | |
| 42,53 | B5-B11 | B5-B11 | B5-B11 | B5-B11 | |
| 44,00 | B5-B11 | B5-B11 | B5-B11 | | |
| 47,13 | B5-B11 | B5-B11 | B5-B11 | B5-B11 | |
| 50,25 | B5-B11 | B5-B11 | B5-B11 | | |
| 55,14 | B5-B11 | B5-B11 | B5-B11 | | |
| 59,40 | B5-B11 | B5-B11 | B5-B11 | | |
| 67,84 | B5-B11 | B5-B11 | B5-B11 | | |

| CS - S - PS 103 | | | | |
|---|---|---|---|---|
| i | 071 | 080 | 090 | 100-112 |
| 74,18 | | B5-B11 | B5-B11 | B5-B11 |
| 81,39 | | B5-B11 | B5-B11 | B5-B11 |
| 89,77 | | B5-B11 | B5-B11 | B5-B11 |
| 100,15 | | B5-B11 | B5-B11 | B5-B11 |
| 110,55 | B5-B11 | B5-B11 | B5-B11 | B5-B11 |
| 121,29 | B5-B11 | B5-B11 | B5-B11 | B5-B11 |
| 128,73 | B5-B11 | B5-B11 | B5-B11 | B5-B11 |
| 141,24 | B5-B11 | B5-B11 | B5-B11 | B5-B11 |
| 173,78 | B5-B11 | B5-B11 | B5-B11 | B5-B11 |
| 188,51 | B5-B11 | B5-B11 | B5-B11 | B5-B11 |
| 203,11 | B5-B11 | B5-B11 | B5-B11 | B5-B11 |
| 222,85 | B5-B11 | B5-B11 | B5-B11 | B5-B11 |
| 224,76 | B5-B11 | B5-B11 | B5-B11 | B5-B11 |
| 274,20 | B5-B11 | B5-B11 | B5-B11 | B5-B11 |
| 280,89 | B5-B11 | B5-B11 | B5-B11 | |
| 292,36 | B5-B11 | B5-B11 | B5-B11 | |
| 320,79 | B5-B11 | B5-B11 | B5-B11 | |
| 345,60 | B5-B11 | B5-B11 | B5-B11 | |
| 394,69 | B5-B11 | B5-B11 | B5-B11 | |

| CS - S - PS 122 | | | | | | | |
|---|---|---|---|---|---|---|---|
| i | 080 | 090 | 100-112 | 132 | 160 | 180 | 200 |
| 8,48 | | | | | B5 | B5 | B5 |
| 9,30 | | | | | B5 | B5 | B5 |
| 10,24 | | | | | B5 | B5 | B5 |
| 11,42 | | | | | B5 | B5 | B5 |
| 12,63 | | | | | B5 | B5 | B5 |
| 13,84 | | | | | B5 | B5 | B5 |
| 16,99 | | | | | B5 | B5 | B5 |
| 21,25 | | | B5-B11 | B5-B11 | B5 | B5 | |
| 22,37 | | | B5-B11 | B5-B11 | B5 | B5 | |
| 23,29 | | | B5-B11 | B5-B11 | B5 | B5 | |
| 26,15 | | | B5-B11 | B5-B11 | B5 | B5 | |
| 28,60 | | | B5-B11 | B5-B11 | B5 | B5 | |
| 30,51 | | | B5-B11 | B5-B11 | B5 | B5 | |
| 32,76 | | | B5-B11 | B5-B11 | B5 | B5 | |
| 33,44 | | | B5-B11 | B5-B11 | B5 | B5 | |
| 35,20 | | | B5-B11 | B5-B11 | B5 | B5 | |
| 41,07 | | | B5-B11 | B5-B11 | B5 | B5 | |
| 43,60 | B5-B11 | B5-B11 | B5-B11 | B5-B11 | | | |
| 44,63 | B5-B11 | B5-B11 | B5-B11 | B5-B11 | | | |
| 49,04 | B5-B11 | B5-B11 | B5-B11 | B5-B11 | | | |
| 53,75 | B5-B11 | B5-B11 | B5-B11 | B5-B11 | | | |
| 66,00 | B5-B11 | B5-B11 | B5-B11 | B5-B11 | | | |

| CS - S - PS 123 | | | | |
|---|---|---|---|---|
| i | 080 | 090 | 100-112 | 132 |
| 64,84 | | | B5-B11 | B5-B11 |
| 71,07 | | | B5-B11 | B5-B11 |
| 78,46 | | | B5-B11 | B5-B11 |
| 87,27 | | | B5-B11 | B5-B11 |
| 105,91 | | | B5-B11 | B5-B11 |
| 112,52 | B5-B11 | B5-B11 | B5-B11 | B5-B11 |
| 123,33 | B5-B11 | B5-B11 | B5-B11 | B5-B11 |
| 130,04 | B5-B11 | B5-B11 | B5-B11 | B5-B11 |
| 133,78 | B5-B11 | B5-B11 | B5-B11 | B5-B11 |
| 151,43 | B5-B11 | B5-B11 | B5-B11 | B5-B11 |
| 177,53 | B5-B11 | B5-B11 | B5-B11 | B5-B11 |
| 194,59 | B5-B11 | B5-B11 | B5-B11 | B5-B11 |
| 215,60 | B5-B11 | B5-B11 | B5-B11 | B5-B11 |
| 238,93 | B5-B11 | B5-B11 | B5-B11 | B5-B11 |
| 255,54 | B5-B11 | B5-B11 | B5-B11 | |
| 280,10 | B5-B11 | B5-B11 | B5-B11 | |
| 301,16 | B5-B11 | B5-B11 | B5-B11 | |
| 343,93 | B5-B11 | B5-B11 | B5-B11 | |

# 2.7 RODAMIENTOS



| S | S050 | | S060 | | S080 | |
|---|---|---|---|---|---|---|
| **Versiones** | Estándar | A solicitud | Estándar | A solicitud | Estándar | A solicitud |
| **C** | 1 | / | 1 | 2 | 1 (Ø40) | 2 (Ø40) |
| | | | | | | 1 (Ø45) |
| **D** | 1 | / | 1 | / | 2 | / |
| **L** | 1 | / | 1 | / | 1 | / |

| S | S100 | | S125 | |
|---|---|---|---|---|
| **Versiones** | Estándar | A solicitud | Estándar | A solicitud |
| **C** | 1 | 2 | 1 | 2 |
| **D** | 2 | / | 2 | / |
| **L** | 1 | / | 1 | / |

1 - Rodamientos de bola

2 - Rodamientos de rodillos

/ - No existen

# 2.8 CARGAS RADIALES



## 2.8.1 Información

El valor de carga radial [N] admisibile se indica en las tablas de prestaciones de los reductores y se refiere a la carga aplicada sobre la línea de centro del eje y en las condiciones más desfavorables como ángulo de aplicación y sentido de rotación. Las cargas axiales máximas admisibles son 1/5 del valor de carga radial indicado, cuando están aplicadas en combinación con la carga radial misma. En las tablas relacionadas a los ejes de salida se indica el valor máximo admisible; nunca se debe superar este valor, porque se refiere a la resistencia de la carcasa. Podrían presentarse condiciones particulares de carga radial superiores a los límites de catálogo; en este caso, ponerse en contacto con nuestro Servicio técnico e indicar todos los datos de la aplicación: dirección de carga, sentido de rotación del eje, tipo de servicio. En caso de ejes dobles o huecos sobre los que se prevea la aplicación de cargas radiales sobre ambos extremos, las cargas máximas admisibles se deben definir en función de las características de la aplicación, en ese caso contactar a nuestro Servicio Técnico. La carga radial sobre el eje se calcula con la siguiente fórmula: **Fre=(2000*M*fz)/D≤Fr1 o Fr2**

- **Fre** [N] Carga radial resultante
- **M** [Nm] Par de torsión sobre el eje
- **D** [mm] Diámetro del elemento de transmisión montado sobre el eje
- **Fr1**-**Fr2** [N] Valor de carga radial máximo admitido (ver tablas correspondientes)
- **fz** = 1,1 piñón dentado - 1,4 piñón de cadena - 1,7 polea para correa trapezoidal - 2,5 polea plana

## 2.8.2 Entrada

Si la carga radial resultante no se aplica sobre el centro del eje, corregir la carga radial admisible Fr1 mediante la siguiente fórmula: **Frx=(Fr1*a)/(b+x)**

- **a** , **b** = valores indicados en las tablas
- **x** = distancia desde el punto de aplicación de la carga hasta la base del eje

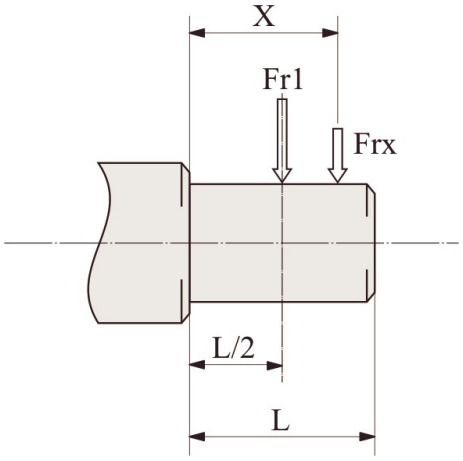


| IS | 052/053 | 062/063 | 082/083 | 102/103 | 122/123 |
|---|---|---|---|---|---|
| a | 105 | 105 | 137 | 137 | 175 |
| b | 80 | 80 | 108 | 108 | 135 |
| Fr1 max(**) | 1500 | 2500 | 3600 | 3600 | 7200 |

(**Fr1 max) Valor máx. admisible del reductor en condiciones estáticas y/o para funcionamiento limitado. Para cargas radiales en servicio continuo verificar los valores de las tablas de prestaciones calculados en función de la carcasa, del eje y de los rodamientos.

# 2.8 CARGAS RADIALES

## 2.8.3 Salida

Si la carga radial resultante no se aplica sobre el centro del eje, corregir la carga radial admisible Fr2 mediante la siguiente fórmula: **Frx=(Fr2*a)/(b+x)**

- **a** , **b** = valores indicados en las tablas
- **x** = distancia desde el punto de aplicación de la carga hasta la base del eje

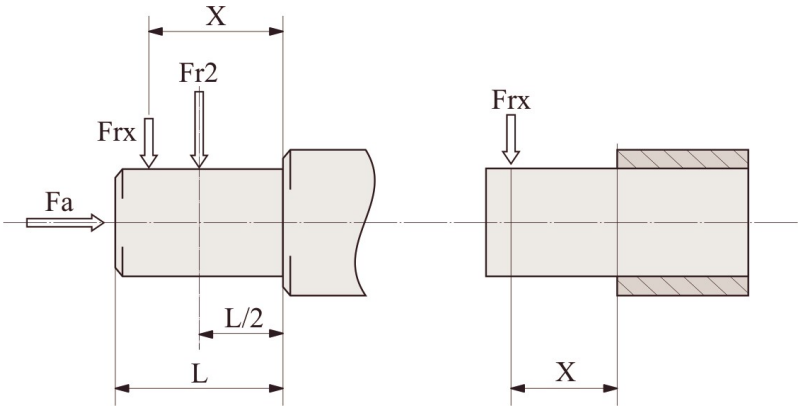


| S | 052/053 | 062/063 | 082/083 | 102/103 | 122/123 |
|---|---|---|---|---|---|
| a | 125 | 145 | 190 | 225 | 265 |
| b | 96 | 116 | 150 | 175 | 202 |
| D (Fr2 max**) | 6000 | 10000 | 18000 | 22000 | 30000 |
| C (Fr2 max**) | 6000 | 4000 | 7200 | 9000 | 11200 |

(**Fr2 max) Valor máx. admisible del reductor en condiciones estáticas y/o para funcionamiento limitado. Para cargas radiales en servicio continuo verificar los valores de las tablas de prestaciones calculados en función de la carcasa, del eje y de los rodamientos.

# 2.9 LUBRICACIÓN

## 2.9.1 Información

En caso de temperaturas ambiente no previstas en la tabla, ponerse en contacto con nuestro Servicio técnico. En caso de temperaturas inferiores a -30°C o superiores a 60°C, es necesario utilizar anillos de retén con mezclas especiales. Para los campos de funcionamiento con temperaturas inferiores a 0°C, es necesario cumplir con lo que sigue:

1. Los motores tienen que ser idóneos al funcionamiento con la temperatura ambiente prevista.
2. La potencia del motor eléctrico debe adecuarse para superar los mayores pares de arranque solicitados.
3. En caso de reductor con carcasa de fundición, cuidado con las cargas de choque porque la fundición puede presentar problemas de fragilidad con temperaturas inferiores a los -15°C.
4. Durante las primeras fases de servicio podrían surgir problemas de lubricación debidos a la elevada viscosidad del aceite y es por lo tanto oportuno efectuar una rotación en "vacío" por algunos minutos.

**Para reductor Atex:**

- Cambiar el aceite según lo previsto en la tabla "Mantenimiento" del correspondiente manual de "Instrucciones para la Instalación y el Uso" (suministrado junto con los productos suministrados).
- No está permitido utilizar aceite diferente al suministrado de fábrica.

## 2.9.2 Lubricantes

Especificaciones de lubricante aconsejados por Motovario.
Salvo otros acuerdos, todos los grupos se entregan con aceite ENI BLASIA 220.

| | S052/3 ÷ 122/3 | |
|---|---|---|
| | Aceite mineral | |
| $T_{amb}$°C ISO/SAE | (-5) ÷ (+40) ISO VG220 | (-15) ÷ (+25) ISO VG150 |
| ENI | BLASIA 220 | BLASIA 150 |
| SHELL | OMALA OIL220 | OMALA OIL150 |
| KLUBER | Kluberoil GEM 1-220N | Kluberoil GEM 1-150N |
| MOBIL | MOBILGEAR 600 XP220 | MOBILGEAR 600 XP150 |
| CASTROL | ALPHA SP 220 | ALPHA SP 150 |
| BP | ENERGOL GR-XP220 | ENERGOL GR-XP150 |

# 2.9 LUBRICACIÓN

## 2.9.3 Lubricantes especiales

| | $T_{amb}$°C | Aceite sintético basado en poliglicoles |
|---|---|---|
| **ENI** | **(-30) ÷ (+30)** | Blasia S 150 (ISO VG150) |
| | **(-20) ÷ (+40)** | Blasia S 220 (ISO VG220) |
| **MOBIL** | **(-45) ÷ (+0)** | SCH 624 (ISO VG32) |
| | **(-40) ÷ (+5)** | SCH 626 (ISO VG68) |
| **KLUBER** | **(-40) ÷ (+5)** | Klubersynth GH 6-32 (ISO VG32) |
| | **(-35) ÷ 10)** | Klubersynth GH 6-80 (ISO VG80) |
| | **(-30) ÷ (+40)** | Klubersynth GH 6-150 (ISO VG150) |
| | **(-25) ÷ (+40)** | Klubersynth GH 6-220 (ISO VG220) |
| | **(-15) ÷ (+50)** | Klubersynth GH 6-460 (ISO VG460) |
| | **(-10) ÷ (+70)** | Klubersynth GH 6-680 (ISO VG680) |

| | $T_{amb}$°C | Aceite sintético basado en poliglicoles para sector alimentario |
|---|---|---|
| **KLUBER** | **(-30) ÷ (+15)** | Klubersynth UH1-6 100 (ISO VG100) |
| | **(-25) ÷ (+40)** | Klubersynth UH1-6 220 (ISO VG220) |
| | **(-15) ÷ (+40)** | Klubersynth UH1-6 320 (ISO VG320) |
| | **(-15) ÷ (+50)** | Klubersynth UH1-6 460 (ISO VG460) |
| | **(-10) ÷ (+50)** | Klubersynth UH1-6 680 (ISO VG680) |

Para el uso de lubricantes especiales contactar con la asistencia técnica.

# 2.9 LUBRICACIÓN

## 2.9.4 Cantidad

- Para los reductores S.. de 2,3 trenes es necesario especificar siempre la posición de montaje prevista.
- Los reductores de la serie S... de 2,3 trenes en los tamaños 050, 060 se suministran con lubricante, no disponen de tapón de aceite y no necesitan ningún mantenimiento.
- Los reductores de la serie S en los tamaños 080,100 y 125 se suministran con lubricante y disponen de tapones para todas las posiciones de montaje previstas en el catálogo.

Es necesario, una vez instalado el reductor en la máquina, sustituir el tapón cerrado, utilizado durante el transporte, por el tapón respiradero que se adjunta.
Las cantidades de aceite en la tabla (litros ~) son únicamente indicativas y para un relleno correcto se tendrá que hacer referencia al tapón de nivel o a la varilla de nivel si estuviera presente. Las eventuales diferencias en el nivel pueden depender de tolerancias de fabricación, pero también del montaje del grupo o del plano de montaje en las instalaciones del cliente. Por dicho motivo, es oportuno que el cliente compruebe y, si es necesario, restablezca el nivel con el grupo instalado.

| S - CS | 052/053 | 062/063 | 082/083 | 102/103 | 122/123 |
|---|---|---|---|---|---|
| B3 | 2,05 | 2,4 | 6 | 9 | 14,7 |
| B8 | 1,8 | 2,3 | 4 | 6 | 11,8 |
| B6 | 2,4 | 2,9 | 5,7 | 8 | 16 |
| B7 | 2,1 | 2,6 | 4,5 | 6,8 | 11,3 |
| V5 | 2,8 | 3,5 | 6,8 | 10,3 | 19 |
| V6 | 2,4 | 2,9 | 6,4 | 9,9 | 18 |

# 2.10 MOMENTOS DE INERCIA



Los siguientes valores del momento de inercia J1 son solo indicativos, respecto a los máximos calculados, y se refieren al eje de entrada del reductor.

| S-2/3 | $J_1$ [Kg*m2] |
|---|---|
| 052/053 | 0,0004 |
| 062/063 | 0,0006 |
| 082/083 | 0,0015 |
| 102/103 | 0,0034 |
| 122/123 | 0,0085 |

## 3.1.1 S 052...123

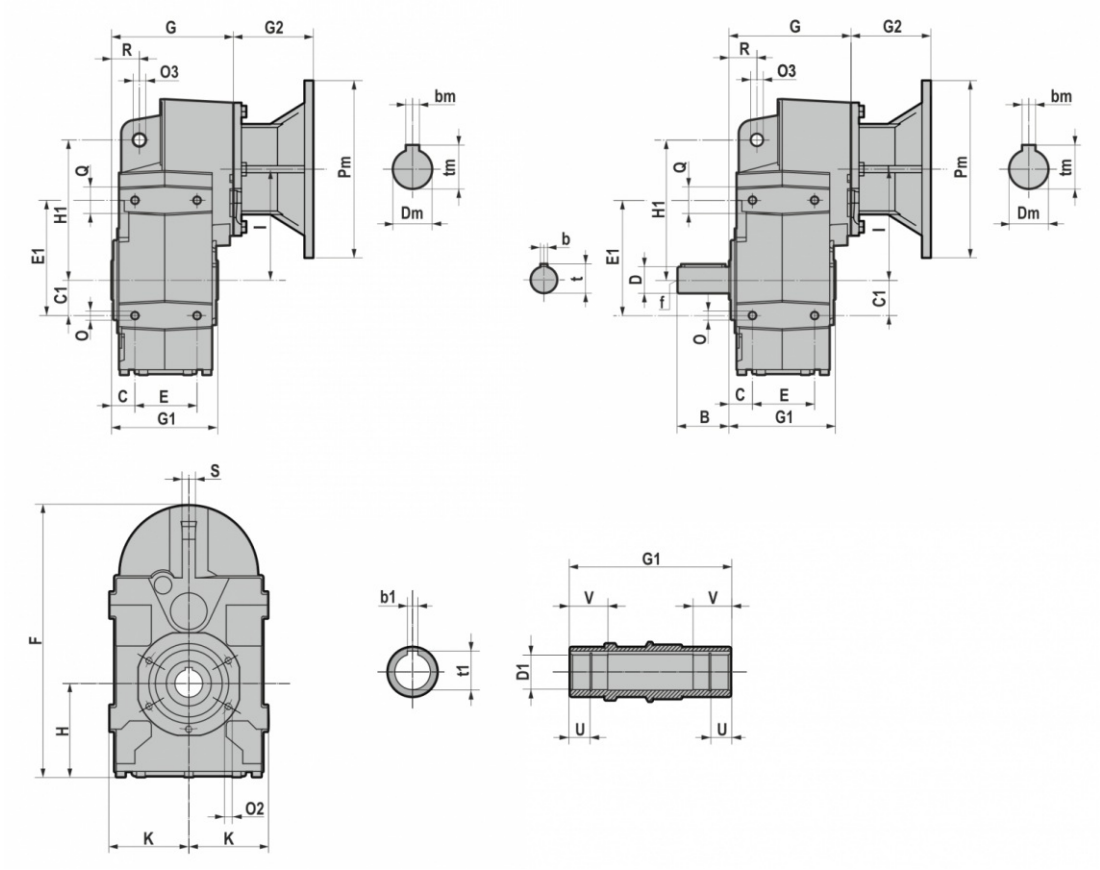


| | D1 H7 | b1 | t1 | U | V | B | D | b | t | f | C | C1 | E | E1 | F | G | G1 | H | H1 | I | K | O | O3 | O2 | Q | R | S |
|---|---|---|---|---|---|---|---|---|---|---|---|---|---|---|---|---|---|---|---|---|---|---|---|---|---|---|---|
| **S052/S053** | 30 | 8 | 33 | 13,8 | 30 | 58 | 30 j6 | 8 | 33 | M10 | 27 | 40 | 70 | 130 | 311 | 137,5 | 120 | 107 | 158 | 125 | 90,5 | M10x18 | 14 | M8x16 (n.5) | 30 | 31,5 | 15 |
| **S062/S063** | 35 | 10 | 38 | 12 | 35 | 58 | 35 j6 | 10 | 38 | M12 | 30 | 45 | 80 | 147 | 320 | 158,5 | 140 | 97 | 170 | 143 | 96,5 | M12x20 | 14 | M8x16 (n.5) | 40 | 32 | 15 |
| **S082/S083** | 40 | 12 | 43 | 22,3 | 42 | 80 | 40 k6 | 12 | 43 | M16 | 37 | 60 | 106 | 190 | 383 | 207 | 180 | 107 | 218 | 170 | 112,5 | M12x20 | 14 | M10x20 (n.7) | 44 | 41 | 20 |
| | 45 | 14 | 48 | 22,3 | 42 | | | | | | | | | | | | | | | | | | | | | | |
| **S102/S103** | 45 | 14 | 49 | 22,3 | 50 | 100 | 50 k6 | 14 | 54 | M16 | 37 | 70 | 137 | 275 | 426 | 217,5 | 210 | 119 | 278 | 180 | 130 | M16x26 | 22 | M12x22 (n.7) | 50 | 50 | 20 |
| | 50 | 14 | 54 | 25 | 50 | | | | | | | | | | | | | | | | | | | | | | |
| **S122/S123** | 60 | 18 | 64 | 28 | 70 | 120 | 60 m6 | 18 | 64 | M20 | 43 | 100 | 165 | 310 | 549 | 257 | 240 | 157 | 346 | 235 | 165 | M16x30 | 22 | M14x28 (n.7) | 50 | 62 | 26 |

| | | G2 | | |
|---|---|---|---|---|
| **IEC** | **Pm x Dm** | 050-060 | 080-100 | 125 |
| **063** | **140x11** | 57 | / | / |
| **071** | **160x14** | 69 | 49,0 | / |
| **080** | **200x19** | 90 | 70,0 | 60,5 |
| **090** | **200x24** | 90 | 70,0 | 60,5 |
| **100-112** | **250x28** | 105 | 85,0 | 75,5 |
| **132** | **300x38** | / | 110,0 | 100,5 |
| **160** | **350x42** | / | 157,5 | 148 |
| **180** | **350x48** | / | 157,5 | 148 |
| **200** | **400x55** | / | / | 185 |

| B5 | Pm | Dm | bm | tm |
|---|---|---|---|---|
| **063** | 140 | 11 | 4 | 12,8 |
| **071** | 160 | 14 | 5 | 16,3 |
| **080** | 200 | 19 | 6 | 21,8 |
| **090** | 200 | 24 | 8 | 27,3 |
| **100** | 250 | 28 | 8 | 31,3 |
| **112** | 250 | 28 | 8 | 31,3 |
| **132** | 300 | 38 | 10 | 41,3 |
| **160** | 350 | 42 | 12 | 45,3 |
| **180** | 350 | 48 | 14 | 51,8 |
| **200** | 400 | 55 | 16 | 59,3 |

## 3.1.2 CS 052...123

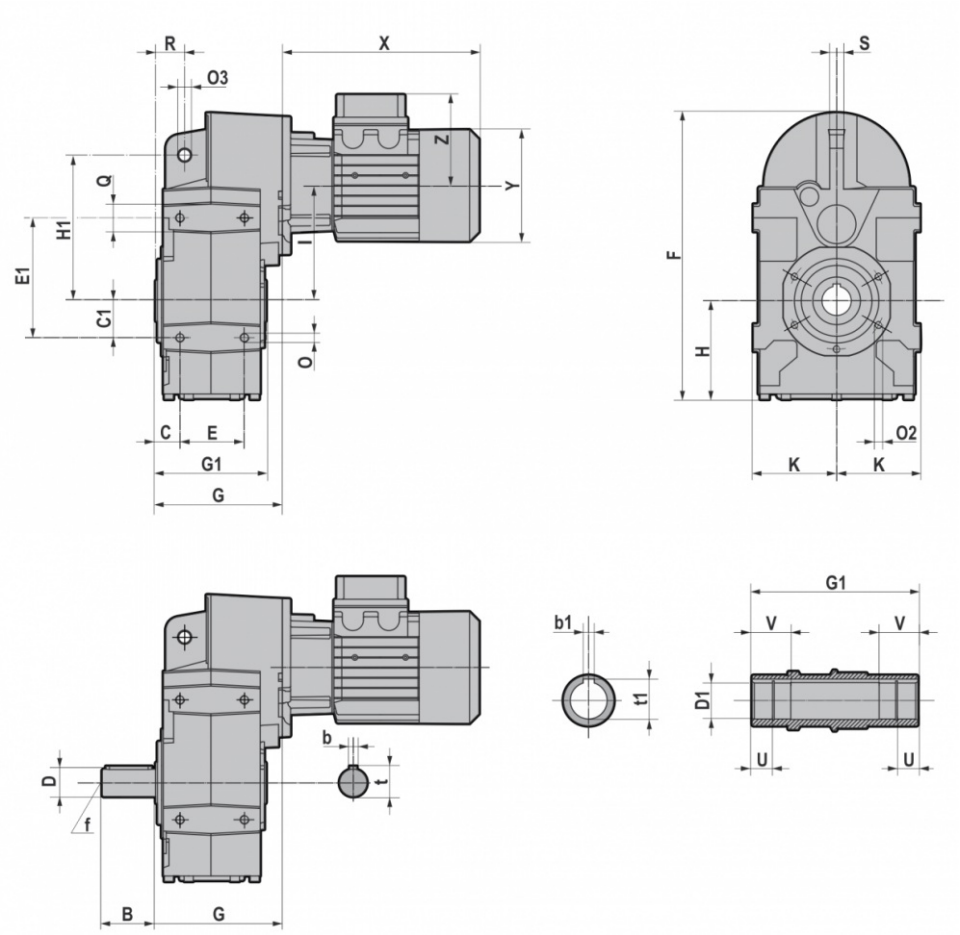


| | D1 H7 | b1 | t1 | U | V | B | D | b | t | f | C | C1 | E | E1 | F | G | G1 | H | H1 | I | K | O | O3 | O2 | Q | R | S |
|---|---|---|---|---|---|---|---|---|---|---|---|---|---|---|---|---|---|---|---|---|---|---|---|---|---|---|---|
| CS052/CS053 | 30 | 8 | 33 | 13,8 | 30 | 58 | 30 j6 | 8 | 33 | M10 | 27 | 40 | 70 | 130 | 311 | 137,5 | 120 | 107 | 158 | 125 | 90,5 | M10x18 | 14 | M8x16 (n.5) | 30 | 31,5 | 15 |
| CS062/CS063 | 35 | 10 | 38 | 12 | 35 | 58 | 35 j6 | 10 | 38 | M12 | 30 | 45 | 80 | 147 | 320 | 158,5 | 140 | 97 | 170 | 143 | 96,5 | M12x20 | 14 | M8x16 (n.5) | 40 | 32 | 15 |
| CS082/CS083 | 40 | 12 | 43 | 22,3 | 42 | 80 | 40 k6 | 12 | 43 | M16 | 37 | 60 | 106 | 190 | 383 | 207 | 180 | 107 | 218 | 170 | 112,5 | M12x20 | 14 | M10x20 (n.7) | 44 | 41 | 20 |
| | 45 | 14 | 48 | 22,3 | 42 | | | | | | | | | | | | | | | | | | | | | | |
| CS102/CS103 | 45 | 14 | 49 | 22,3 | 50 | 100 | 50 k6 | 14 | 54 | M16 | 37 | 70 | 137 | 275 | 426 | 217,5 | 210 | 119 | 278 | 180 | 130 | M16x26 | 22 | M12x22 (n.7) | 50 | 50 | 20 |
| | 50 | 14 | 54 | 25 | 50 | | | | | | | | | | | | | | | | | | | | | | |
| CS122/CS123 | 60 | 18 | 64 | 28 | 70 | 120 | 60 m6 | 18 | 64 | M20 | 43 | 100 | 165 | 310 | 549 | 257 | 240 | 157 | 346 | 235 | 165 | M16x30 | 22 | M14x28 (n.7) | 50 | 62 | 26 |

| T (IE1 - IE2) | | | | | | | | | |
|---|---|---|---|---|---|---|---|---|---|
| | | 063 | 071 | 080 | 090S | 090L | 100 | 112 | 132S | 132M/L |
| CS052/CS053 CS062/CS063 | X | 215 | 241 | 268 | 296 | 321 | 333 | 351 | / | / |
| | Y | 121 | 139 | 158 | 173 | 173 | 191 | 211 | / | / |
| | Z | 104 | 112 | 122 | 130 | 130 | 139 | 154 | / | / |
| CS082/CS083 CS102/CS103 | X | / | 221 | 248 | 276 | 301 | 335 | 356 | 405 | 443 |
| | Y | / | 139 | 158 | 173 | 173 | 191 | 211 | 249 | 249 |
| | Z | / | 112 | 122 | 130 | 130 | 139 | 154 | 194 | 194 |
| CS122/CS123 | X | / | / | / | 267 | 292 | 326 | 347 | 396 | 434 |
| | Y | / | / | / | 173 | 173 | 191 | 211 | 249 | 249 |
| | Z | / | / | / | 130 | 130 | 139 | 154 | 194 | 194 |

| TB (IE1 - IE2) | | | | | | | | | |
|---|---|---|---|---|---|---|---|---|---|
| | | 063 | 071 | 080 | 090S | 090L | 100 | 112 | 132S | 132M/L |
| CS052/CS053 CS062/CS063 | X | 273 | 306,5 | 341 | 373 | 398 | 415 | 448 | / | / |
| | Y | 121 | 139 | 158 | 173 | 173 | 191 | 211 | / | / |
| | Z | 119 | 129 | 137 | 157 | 157 | 168 | 183 | / | / |
| CS082/CS083 CS102/CS103 | X | / | 286,5 | 321 | 353 | 378 | 417 | 453 | 505 | 547 |
| | Y | / | 139 | 158 | 173 | 173 | 191 | 211 | 249 | 249 |
| | Z | / | 129 | 137 | 157 | 157 | 168 | 183 | 230 | 230 |
| CS122/CS123 | X | / | / | / | 343 | 368 | 407 | 443 | 495 | 537 |
| | Y | / | / | / | 173 | 173 | 191 | 211 | 249 | 249 |
| | Z | / | / | / | 157 | 157 | 168 | 183 | 230 | 230 |

## 3.1.3 IS 052...123

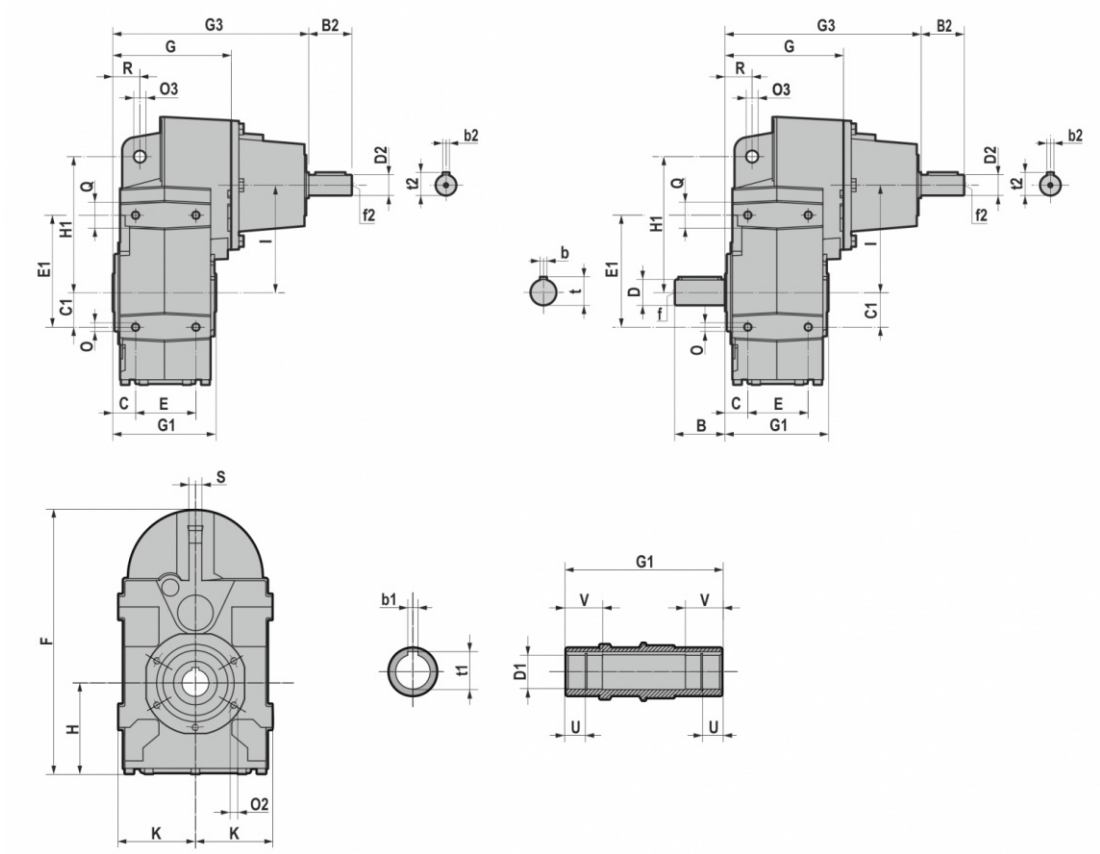


| | D1 H7 | b1 | t1 | U | V | B | D | b | t | f | C | C1 | E | E1 | F | G | G1 | H | H1 | I | K | O | O3 | O2 | Q | R | S |
|---|---|---|---|---|---|---|---|---|---|---|---|---|---|---|---|---|---|---|---|---|---|---|---|---|---|---|---|
| **IS052/IS053** | 30 | 8 | 33 | 13,8 | 30 | 58 | 30 j6 | 8 | 33 | M10 | 27 | 40 | 70 | 130 | 311 | 137,5 | 120 | 107 | 158 | 125 | 90,5 | M10x18 | 14 | M8x16 (n.5) | 30 | 31,5 | 15 |
| **IS062/IS063** | 35 | 10 | 38 | 12 | 35 | 58 | 35 j6 | 10 | 38 | M12 | 30 | 45 | 80 | 147 | 320 | 158,5 | 140 | 97 | 170 | 143 | 96,5 | M12x20 | 14 | M8x16 (n.5) | 40 | 32 | 15 |
| **IS082/IS083** | 40 | 12 | 43 | 22,3 | 42 | 80 | 40 k6 | 12 | 43 | M16 | 37 | 60 | 106 | 190 | 383 | 207 | 180 | 107 | 218 | 170 | 112,5 | M12x20 | 14 | M10x20 (n.7) | 44 | 41 | 20 |
| | 45 | 14 | 48 | 22,3 | 42 | | | | | | | | | | | | | | | | | | | | | | |
| **IS102/IS103** | 45 | 14 | 49 | 22,3 | 50 | 100 | 50 k6 | 14 | 54 | M16 | 37 | 70 | 137 | 275 | 426 | 217,5 | 210 | 119 | 278 | 180 | 130 | M16x26 | 22 | M12x22 (n.7) | 50 | 50 | 20 |
| | 50 | 14 | 54 | 25 | 50 | | | | | | | | | | | | | | | | | | | | | | |
| **IS122/IS123** | 60 | 18 | 64 | 28 | 70 | 120 | 60 m6 | 18 | 64 | M20 | 43 | 100 | 165 | 310 | 549 | 257 | 240 | 157 | 346 | 235 | 165 | M16x30 | 22 | M14x28 (n.7) | 50 | 62 | 26 |

| | G3 | B2 | D2 | b2 | t2 | f2 |
|---|---|---|---|---|---|---|
| **IS052/IS053** | 227,5 | 50 | 24 j6 | 8 | 27 | M8 |
| **IS062/IS063** | 248,5 | 50 | 24 j6 | 8 | 27 | M8 |
| **IS082/IS083** | 320 | 60 | 28 j6 | 8 | 31 | M10 |
| **IS102/IS103** | 330,5 | 60 | 28 j6 | 8 | 31 | M10 |
| **IS122/IS123** | 383,5 | 80 | 38 k6 | 10 | 41 | M12 |

# 3.2 MOTORES ELÉCTRICOS

## 3.2.1 Motores eléctricos

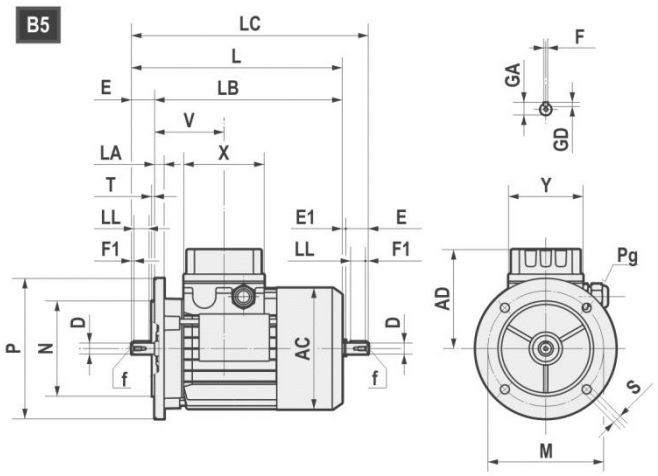


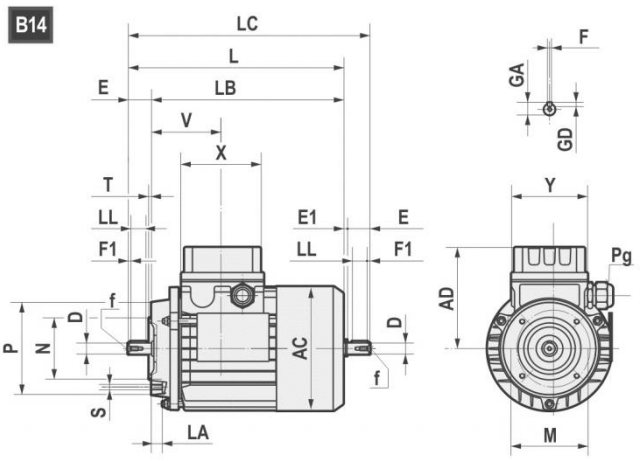


| | AC | AD | L | LB | LC | X | Y | V | D | E | E1 | f | F1 | GA | F | GD |
|---|---|---|---|---|---|---|---|---|---|---|---|---|---|---|---|---|
| **063** | 121 | 104 | 211 | 188 | 235,5 | 80 | 74 | 69 | 11 j6 | 23 | 1,5 | M4x10 | 2,5 | 12,5 | 4 | 4 |
| **071** | 139 | 112 | 238,5 | 208,5 | 271 | 80 | 74 | 74,5 | 14 j6 | 30 | 2,5 | M5x12.5 | 3 | 16 | 5 | 5 |
| **080** | 158 | 122 | 272,5 *(296) | 232,5 *(256) | 314 *(337) | 80 | 74 | 78 | 19 j6 | 40 | 1,5 | M6x16 | 5 | 21,5 | 6 | 6 |
| **90S** | 173 | 146 | 298 *(331) | 248 *(281) | 349,5 *(381) | 98 | 98 | 89,5 | 24 j6 | 50 | 1,5 | M8x19 | 5 | 27 | 8 | 7 |
| **90L** | 173 | 146 | 323 *(356) | 273 *(306) | 374,5 *(408) | 98 | 98 | 89,5 | 24 j6 | 50 | 1,5 | M8x19 | 5 | 27 | 8 | 7 |
| **100** | 191 | 155 | 368 | 308 | 431,5 | 98 | 98 | 97,5 | 28 j6 | 60 | 3,5 | M10x22 | 7,5 | 31 | 8 | 7 |
| **112** | 211 | 170 | 382,5 *(408) | 322,5 *(348) | 447 *(472) | 98 | 98 | 100 | 28 j6 | 60 | 3,5 | M10x22 | 7,5 | 31 | 8 | 7 |
| **132S** | 249 | 195 | 452 | 372 | 536,5 | 118 | 118 | 115,5 | 38 k6 | 80 | 4 | M12x28 | 10 | 41 | 10 | 8 |
| **132L** | 249 | 195 | 490 | 410 | 574,5 | 118 | 118 | 115,5 | 38 k6 | 80 | 4 | M12x28 | 10 | 41 | 10 | 8 |
| **160S** | 249 | 195 | 520 | 410 | / | 118 | 118 | 115,5 | 42k6 | 100 | / | M16x36 | 10 | 45 | 12 | 8 |

*TP80B4,TP90S4, TP90L4, TP90S6, TP112M4, TP112M6

| B5 | M | N | P | LA | S | T |
|---|---|---|---|---|---|---|
| **063** | 115 | 95 | 140 | 10 | 9 | 3 |
| **071** | 130 | 110 | 160 | 10 | 9,5 | 3,5 |
| **080** | 165 | 130 | 200 | 12 | 11 | 3,5 |
| **090** | 165 | 130 | 200 | 12 | 11 | 3,5 |
| **100** | 215 | 180 | 250 | 15 | 14 | 4 |
| **112** | 215 | 180 | 250 | 14,5 | 14 | 4 |
| **132** | 265 | 230 | 300 | 20 | 14 | 3,5 |
| **160** | 300 | 250 | 350 | 13 | 18,5 | 3,5 |

| B14 | M | N | P | LA | S | T |
|---|---|---|---|---|---|---|
| **063** | 75 | 60 | 90 | 10 | M5 | 2,5 |
| **071** | 85 | 70 | 105 | 10,5 | M6 | 2,5 |
| **080** | 100 | 80 | 120 | 10,5 | M6 | 3 |
| **090** | 115 | 95 | 140 | 11,5 | M8 | 3 |
| **100** | 130 | 110 | 160 | 15 | M8 | 3,5 |
| **112** | 130 | 110 | 160 | 11,5 | M8 | 3,5 |
| **132** | 165 | 130 | 200 | 20,5 | M10 | 3,5 |
| **160** | 215 | 180 | 250 | - | M12 | 4 |

# 3.2 MOTORES ELÉCTRICOS



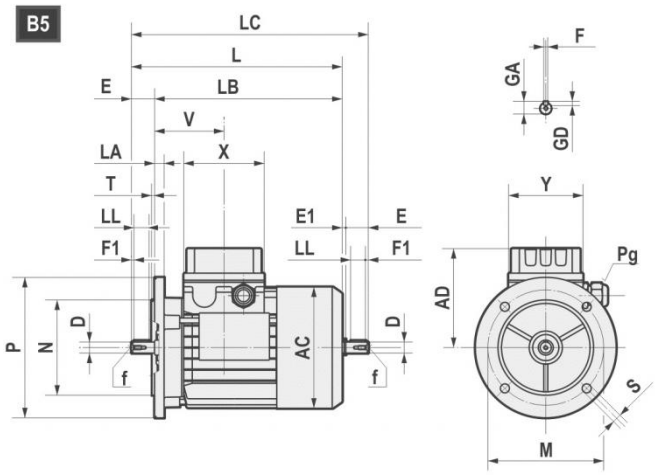


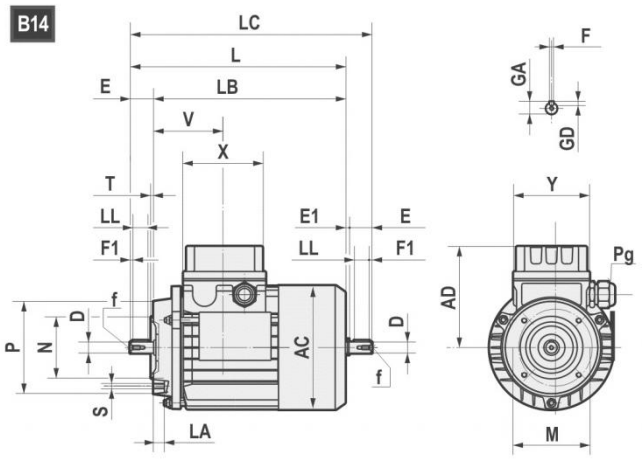


| | | AC | AD | L | LB | X | D | E | f | GA | F | GD | LL | Pg | |
|---|---|---|---|---|---|---|---|---|---|---|---|---|---|---|---|
| **160M** | 2-4-6 | 314 | 251 | 600 | 490 | 158 | 42 | 110 | M16 | 45 | 12 | 8 | 90 | 2-M40x1,5 | 1-M16x1,5 |
| **160L** | 2-4-6 | 314 | 251 | 645 | 535 | 158 | 42 | 110 | M16 | 45 | 12 | 8 | 90 | 2-M40x1,5 | 1-M16x1,5 |
| **180M** | 2-4 | 355 | 267 | 680 | 570 | 158 | 48 | 110 | M16 | 51,5 | 14 | 9 | 100 | 2-M40x1,5 | 1-M16x1,5 |
| **180L** | 4-6 | 355 | 267 | 720 | 610 | 158 | 48 | 110 | M16 | 51,5 | 14 | 9 | 100 | 2-M40x1,5 | 1-M16x1,5 |
| **200L** | 2-4-6 | 397 | 300 | 785 | 675 | 187 | 55 | 110 | M20 | 59 | 16 | 10 | 100 | 2-M50x1,5 | 1-M16x1,5 |
| **225S** | 4 | 446 | 325 | 820 | 680 | 187 | 60 | 140 | M20 | 64 | 18 | 11 | 125 | 2-M50x1,5 | 1-M16x1,5 |
| **225M** | 2 | 446 | 325 | 815 | 705 | 187 | 55 | 110 | M20 | 59 | 16 | 10 | 100 | 2-M50x1,5 | 1-M16x1,5 |
| **225M** | 4-6 | 446 | 325 | 845 | 705 | 187 | 60 | 140 | M20 | 64 | 18 | 11 | 125 | 2-M50x1,5 | 1-M16x1,5 |
| **250M** | 2-4-6 | 485 | 360 | 910 | 770 | 238 | 60 | 140 | M20 | 64 | 18 | 11 | 125 | 2-M63x1,5 | 1-M16x1,5 |
| **250M** | 2-4-6 | 485 | 360 | 910 | 770 | 238 | 65 | 140 | M20 | 69 | 18 | 11 | 125 | 2-M63x1,5 | 1-M16x1,5 |
| **280S** | 2-4-6 | 547 | 390 | 970 | 830 | 238 | 65 | 140 | M20 | 69 | 18 | 11 | 125 | 2-M63x1,5 | 1-M16x1,5 |
| **280S** | 2-4-6 | 547 | 390 | 970 | 830 | 238 | 75 | 140 | M20 | 79,5 | 20 | 12 | 125 | 2-M63x1,5 | 1-M16x1,5 |
| **280M** | 2-4-6 | 547 | 390 | 1025 | 885 | 238 | 65 | 140 | M20 | 69 | 18 | 11 | 125 | 2-M63x1,5 | 1-M16x1,5 |
| **280M** | 2-4-6 | 547 | 390 | 1025 | 885 | 238 | 75 | 140 | M20 | 79,5 | 20 | 12 | 125 | 2-M63x1,5 | 1-M16x1,5 |

| B5 | M | N | P | LA | S | T |
|---|---|---|---|---|---|---|
| **160** | 300 | 250 | 350 | 13 | 19 | 5 |
| **180** | 300 | 250 | 350 | 15 | 19 | 5 |
| **200** | 350 | 300 | 400 | 17 | 19 | 5 |
| **225** | 400 | 350 | 450 | 20 | 19 | 5 |
| **250** | 500 | 450 | 550 | 22 | 19 | 5 |
| **280** | 500 | 450 | 550 | 22 | 19 | 5 |

## 3.2.2 Motores de eficiencia estándar (TS), alta (TH) y premium (TP)

Los motores trifásicos de polaridad simple Motovario están disponibles en tres versiones diferentes (IE1-IE2-IE3) de acuerdo con la norma IEC 60034-30-1 (ver tabla). El rendimiento se calcula según el método establecido por la norma IEC 60034-2-1.

1. IE1: Serie TS de eficiencia estándar.
2. IE2: Serie TH de alta eficiencia.
3. IE3: Serie TP de eficiencia premium.

Tabla disponibilidad comercial Motovario

| | | NIVELES DE EFICIENCIA | | |
|---|---|---|---|---|
| **POTENCIAS NOMINALES [kW]** | POLOS | IE1 | IE2 | IE3 |
| **0,09 ≤ Pn < 0,75** | 2 - 4 - 6 | TS-TBS | - | - |
| **0,75 ≤ Pn ≤ 11** | 2 - 4 | TBS | - | - |
| **0,75 ≤ Pn ≤ 5,5** | 6 | TBS | TH-TBH | TP-TBP |
| **0,75 ≤ Pn ≤ 9,2** | 2 - 4 | - | TH-TBH | - |
| **0,75 ≤ Pn ≤ 7,5** | 2 - 4 | - | - | TP-TBP |
| **11 ≤ Pn ≤ 37** | 2 | TBS (*) | - | TP |
| **11 ≤ Pn ≤ 55** | 4 | TBS (*) | - | - |
| **11 ≤ Pn ≤ 90** | 4 | - | - | TP |
| **7,5 ≤ Pn ≤ 22** | 6 | TBS (*) | - | TP |

(*) Series disponibles bajo pedido.

## 3.2.3 Potencia nominal - [kW]

| | 63A | 63B | 63C | 71A | 71B | 71C | 80A | | | 80B | | |
|---|---|---|---|---|---|---|---|---|---|---|---|---|
| **Polos** | TS | TS | TS | TS | TS | TS | TS | TH | TP | TS | TH | TP |
| **2** | 0,18 | 0,25 | 0,37 | 0,37 | 0,55 | - | - | 0,75 | 0,75 | - | 1,1 | 1,1 |
| **4** | 0,12 | 0,18 | 0,22 | 0,25 | 0,37 | 0,55 | 0,55 | - | - | - | 0,75 | 0,75 |
| **6** | 0,09 | 0,12 | 0,15 | 0,18 | 0,25 | 0,37 | 0,37 | - | - | 0,55 | - | - |

| | 90S | | 90L | | 100LR | 100L | 100LA | | 112MR | 112MS | 112MA | 112M |
|---|---|---|---|---|---|---|---|---|---|---|---|---|
| **Polos** | TH | TP | TH | TP | TP | TP | TH | TP | TP | TP | TH | TP |
| **2** | 1,5 | 1,5 | 2,2 | 2,2 | - | 3 | 3 | - | - | - | 4 | 4 |
| **4** | 1,1 | 1,1 | 1,5 | 1,5 | - | - | 2,2 | 2,2 | 2,2 | 3 | 4 | 4 |
| **6** | - | 0,75 | 0,75 | - | 1,1 | 1,5 | 1,1 | - | - | - | 2,2 | 2,2 |

| | 112MR | 112MS | 132S | 132SA | 132MS | 132SB | 132M | 132MA | | 132MB | |
|---|---|---|---|---|---|---|---|---|---|---|---|
| **Polos** | TP | TP | TP | TH | TP | TH | TP | TH | TP | TH | TP |
| **2** | - | - | 5,5 | 5,5 | - | 7,5 | 7,5 | 9,2 | - | - | - |
| **4** | 2,2 | 3 | - | 5,5 | 5,5 | - | 7,5 | 7,5 | - | - | - |
| **6** | - | - | 3 | 3 | - | - | - | 4 | 4 | 5,5 | 5,5 |

| | 160M | 160MA | 160MB | 160L | 160LA | 180M | 180L |
|---|---|---|---|---|---|---|---|
| **Polos** | TP | TP | TP | TP | TP | TP | TP |
| **2** | - | 11 | 15 | 18,5 | - | 22 | - |
| **4** | - | 11 | - | - | 15 | 18,5 | 22 |
| **6** | 7,5 | - | - | 11 | - | - | 15 |

| | 200L | 200LA | 200LB | 225S | 225M | 250M | 280S | 280M |
|---|---|---|---|---|---|---|---|---|
| **Polos** | TP | TP | TP | TP | TP | TP | TP | TP |
| **2** | - | 30 | 37 | - | - | - | - | - |
| **4** | 30 | - | - | 37 | 45 | 55 | 75 | 90 |
| **6** | - | 18,5 | 22 | - | - | - | - | - |

# 3.3 PESO

En las tablas ilustran las cantidades de lubricante de los reductores.

| * S-PS | 063 | 071 | 080-090 | 100-112 | 132 | 160 | 180 | 200 | 225 | |
|---|---|---|---|---|---|---|---|---|---|---|
| 052-053 | 16 | 16,4 | 17 | 21,2 | / | / | / | / | / | ~ kg |
| 062-063 | / | 19,9 | 20,6 | 24,9 | / | / | / | / | / | |
| 082-083 | / | 32,9 | 35 | 37 | 39,7 | / | / | / | / | |
| 102-103 | / | 44 | 46 | 48 | 50,7 | 57,4 | 57,4 | / | / | |
| 122-123 | / | / | 82 | 84,2 | 87 | 93 | 93 | 108 | / | |

| IS | ~ kg |
|---|---|
| 052-053 | 19,2 |
| 062-063 | 22,7 |
| 082-083 | 39 |
| 102-103 | 50 |
| 122-123 | 91,8 |

*Peso sin motor

| | TS | | | | | | | | | |
|---|---|---|---|---|---|---|---|---|---|---|
| CS | 063 | 071 | 080 | 090S | 090L | 100 | 112 | 132S | 132M | |
| 052-053 | 19,5 | 20,4 | 25,1 | 29 | 31 | 36,5 | 48 | / | / | ~ kg |
| 062-063 | / | 23,9 | 28,7 | 32,6 | 34,6 | 40,1 | 51,6 | / | / | |
| 082-083 | / | 36,5 | 41,6 | 44 | 45,5 | 50,6 | 62 | 76 | 87,6 | |
| 102-103 | / | 47,5 | 52,6 | 55 | 56,5 | 61,6 | 73 | 87 | 98,6 | |
| 122-123 | / | / | / | 91 | 92 | 98 | 108 | 123 | 132 | |

| | TH | | | | | | | |
|---|---|---|---|---|---|---|---|---|
| CS | 080 | 090S | 090L | 100 | 112 | 132S | 132M | |
| 052-053 | 26,8 | 31,3 | 33 | 38,8 | 51,1 | / | / | ~ kg |
| 062-063 | 30,4 | 34,9 | 36,6 | 42,4 | 54,7 | / | / | |
| 082-083 | 43,3 | 46,3 | 47,5 | 52,9 | 65,1 | 81,3 | 94,4 | |
| 102-103 | 54,3 | 57,3 | 58,5 | 63,9 | 76,1 | 92,3 | 105,4 | |
| 122-123 | / | 93,3 | 94 | 100,3 | 111,1 | 128,3 | 138,8 | |

| | TBS | | | | | | | | | |
|---|---|---|---|---|---|---|---|---|---|---|
| CS | 063 | 071 | 080 | 090S | 090L | 100 | 112 | 132S | 132M | |
| 052-053 | 21 | 22,6 | 28,6 | 34,5 | 36,5 | 42 | 57,7 | / | / | ~ kg |
| 062-063 | / | 26,2 | 32,2 | 38,1 | 40,1 | 45,6 | 61,3 | / | / | |
| 082-083 | / | 38,7 | 45 | 49,5 | 51 | 56 | 71,7 | 86,3 | 102,3 | |
| 102-103 | / | 49,7 | 56 | 60,5 | 62 | 67 | 82,7 | 97,3 | 113,3 | |
| 122-123 | / | / | / | 96,5 | 97,5 | 103,5 | 117,7 | 133,3 | 146,7 | |

| | TBH | | | | | | | |
|---|---|---|---|---|---|---|---|---|
| CS | 080 | 090S | 090L | 100 | 112 | 132S | 132M | |
| 052-053 | 30,3 | 36,8 | 38,5 | 45,7 | 60,8 | / | / | ~ kg |
| 062-063 | 33,9 | 40,4 | 42,1 | 49,3 | 64,4 | / | / | |
| 082-083 | 46,7 | 51,8 | 53 | 59,7 | 74,8 | 91,6 | 108,8 | |
| 102-103 | 57,7 | 62,8 | 64 | 70,7 | 85,8 | 102,6 | 119,8 | |
| 122-123 | / | 98,8 | 99,5 | 104 | 120,8 | 138,6 | 153,2 | |

# 3.4 EXTREMIDAD DEL EJE



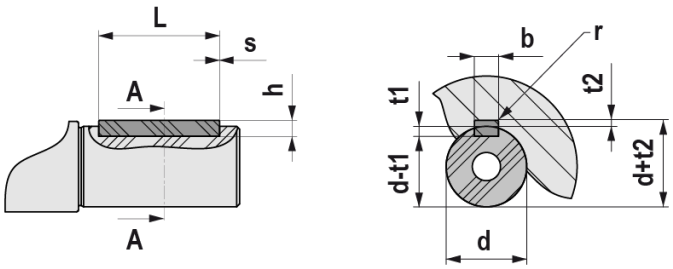


| UNI 6604 - DIN 6885 | | | | | | | | | | | | | | | |
|---|---|---|---|---|---|---|---|---|---|---|---|---|---|---|---|
| d | | | b x h | | | Tol. b / h | L | | s min / max | b | t1 | t2 | Tol. t1 / t2 | r max |
| | 6 | 8 | 2 | × | 2 | h9 / h9 | 6 | 20 | 0,16<br>0,25 | 2 | 1,2 | 1 | 0,1<br>0 | 0,08<br>0,16 |
| > | 8 | 10 | 3 | × | 3 | | 6 | 36 | | 3 | 1,8 | 1,4 | | |
| > | 10 | 12 | 4 | × | 4 | | 8 | 45 | | 4 | 2,5 | 1,8 | | |
| > | 12 | 17 | 5 | × | 5 | | 10 | 56 | 0,25<br>0,4 | 5 | 3 | 2,3 | | 0,16<br>0,25 |
| > | 17 | 22 | 6 | × | 6 | | 14 | 70 | | 6 | 3 | 2,8 | | |
| > | 22 | 30 | 8 | × | 7 | h9 / h11 | 18 | 90 | | 8 | 4 | 3,3 | 0,2<br>0 | |
| > | 30 | 38 | 10 | × | 8 | | 22 | 110 | 0,4<br>0,6 | 10 | 5 | 3,3 | | 0,25<br>0,4 |
| > | 38 | 44 | 12 | × | 8 | | 28 | 140 | | 12 | 5 | 3,3 | | |
| > | 44 | 50 | 14 | × | 9 | | 36 | 160 | | 14 | 5,5 | 3,8 | | |
| > | 50 | 58 | 16 | × | 10 | | 45 | 180 | | 16 | 6 | 4,3 | | |
| > | 58 | 65 | 18 | × | 11 | | 50 | 200 | | 18 | 7 | 4,4 | | |
| > | 65 | 75 | 20 | × | 12 | | 56 | 110 | 0,6<br>0,8 | 20 | 7,5 | 4,9 | | 0,4<br>0,6 |
| > | 75 | 85 | 22 | × | 14 | | 63 | 140 | | 22 | 9 | 5,4 | | |
| > | 85 | 95 | 25 | × | 14 | | 70 | 160 | | 25 | 9 | 5,4 | | |
| > | 95 | 110 | 28 | × | 16 | | 80 | 180 | | 28 | 10 | 6,4 | | |
| > | 110 | 130 | 32 | × | 18 | | 90 | 200 | | 32 | 11 | 7,4 | | |
| > | 130 | 150 | 36 | × | 20 | | 100 | 160 | 1<br>1,2 | 36 | 12 | 8,4 | 0,3<br>0 | 0,7<br>1 |
| > | 150 | 170 | 40 | × | 22 | | 110 | 180 | | 40 | 13 | 9,4 | | |
| > | 170 | 200 | 45 | × | 25 | | 125 | 200 | | 45 | 14 | 10,4 | | |

# 4.1 EJES LENTOS



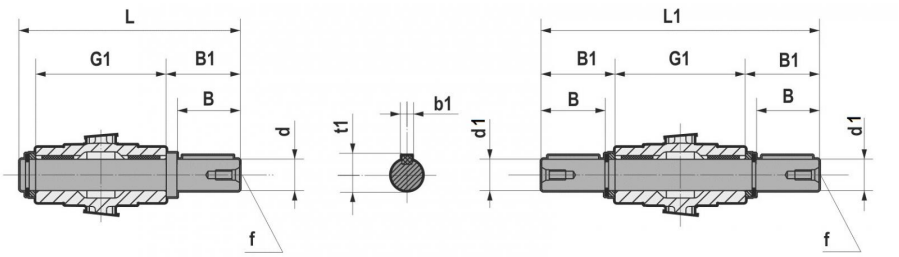


| | d h6 | B | B1 | G1 | L | f | b1 | t1 |
|---|---|---|---|---|---|---|---|---|
| **S062/S063** | 35 | 58 | 62 | 140 | 210,5 | M12 | 10 | 38 |
| **S082/S083** | 40 | 80 | 84,25 | 180 | 273 | M16 | 12 | 43 |
| **S102/S103** | 50 | 100 | 105 | 210 | 325 | M16 | 14 | 53,5 |
| **S122/S123** | 60 | 120 | 125 | 240 | 375 | M20 | 18 | 64 |

# 4.2 BRIDA DE SALIDA



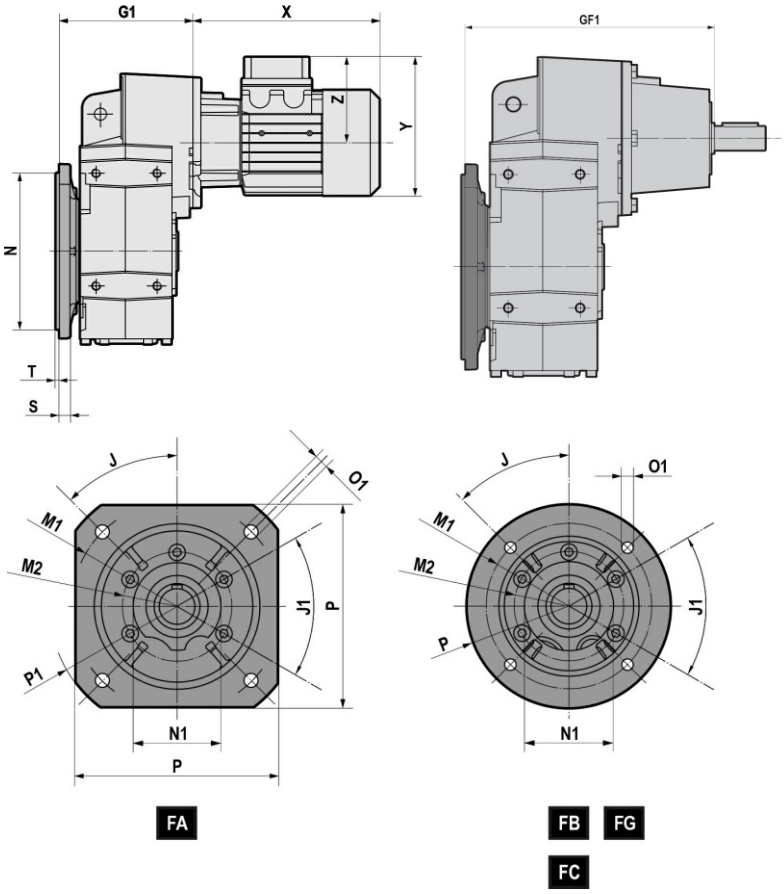


| | | J | J1 | M1 | M2 | N f8 | N1 | O1 | P | P1 | S | T | G1 | GF1 |
|---|---|---|---|---|---|---|---|---|---|---|---|---|---|---|
| S052 S053 | FA | 45 | 45 | 215 | 105 | 180 | 90 | 14 | 200 | 250 | 12 | 4 | 153 | 243 |
| | FB | 45 | 45 | 165 | 105 | 130 | 90 | 11 | 200 | / | 12 | 3,5 | 153 | 243 |
| S062 S063 | FA | 45 | 45 | 215 | 105 | 180 | 90 | 14 | 200 | 250 | 12 | 4 | 172,5 | 262,5 |
| | FB | 45 | 45 | 165 | 105 | 130 | 90 | 11 | 200 | / | 12 | 3,5 | 172,5 | 262,5 |
| S082 S083 | FA | 45 | 45 | 265 | 130 | 230 | 110 | 14 | 250 | 300 | 15 | 4 | 227 | 340 |
| | FB | 45 | 45 | 215 | 130 | 180 | 110 | 14 | 250 | / | 15 | 4 | 227 | 340 |
| | FC | 45 | 45 | 165 | 130 | 130 | 110 | 11 | 200 | / | 15 | 3,5 | 227 | 340 |
| S102 S103 | FA | 45 | 45 | 300 | 165 | 250 | 130 | 18 | 300 | 350 | 16 | 5 | 247,5 | 360,5 |
| | FB | 45 | 45 | 265 | 165 | 230 | 130 | 14 | 300 | / | 16 | 4 | 247,5 | 360,5 |
| | FC | 45 | 45 | 215 | 165 | 180 | 130 | 14 | 250 | / | 16 | 4 | 247,5 | 360,5 |
| S122 S123 | FA | 45 | 45 | 350 | 185 | 300 | 150 | 18 | 350 | 400 | 18 | 5 | 287 | 413,5 |
| | FB | 45 | 45 | 300 | 185 | 250 | 150 | 18 | 350 | / | 18 | 5 | 287 | 413,5 |
| | FC | 45 | 45 | 265 | 185 | 230 | 150 | 14 | 300 | / | 18 | 4 | 287 | 413,5 |

# 4.3 SISTEMAS DE FIJACIÓN PENDULAR



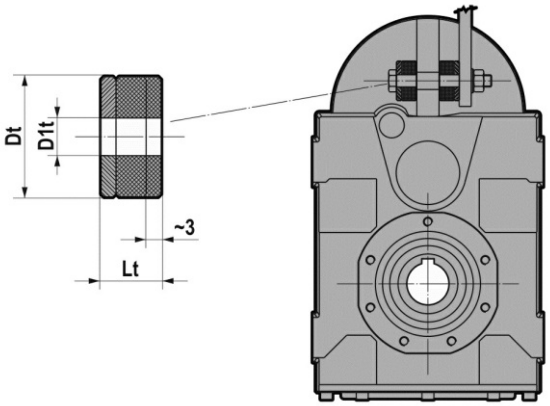


| | Dt | D1t | Lt |
|---|---|---|---|
| **S052/S053** | 40 | 12,5 | 20 |
| **S062/S063** | 40 | 12,5 | 20 |
| **S082/S083** | 40 | 12,5 | 20 |
| **S102/S103** | 60 | 21 | 30 |
| **S122/S123** | 60 | 21 | 30 |

# 4.4 DISPOSITIVO ANTIRRETORNO



El reductor puede suministrarse con un dispositivo antirretorno en el eje veloz. El antirretorno permite la rotación de los ejes en un solo sentido, según el tamaño está disponible en la brida PAM o en el motor, sin incremento de dimensiones. Es muy importante especificar en el pedido el sentido de rotación requerido. El dispositivo antirretorno no está disponible para el montaje V5 posición con motor tamaño IEC 100...225.

Accesorio certificado sólo ATEX 3G/3D.

SENTIDO DE ROTACIÓN LIBRE

**S...** 2/C-D-L

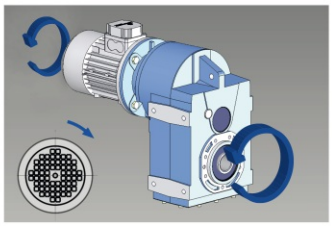

SENTIDO **HORARIO** REFERIDO AL EJE VELOZ

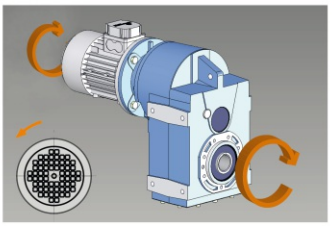

SENTIDO **ANTIHORARIO** REFERIDO AL EJE VELOZ

**S...** 3/C-D-L

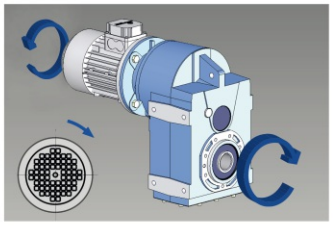

SENTIDO **HORARIO** REFERIDO AL EJE VELOZ

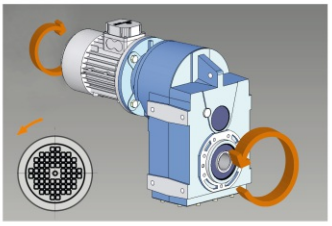

SENTIDO **ANTIHORARIO** REFERIDO AL EJE VELOZ

| | 063 | 071 | 080 | 090 | 100-112 | 132 | 160 | 180 | 200 |
|---|---|---|---|---|---|---|---|---|---|
| | 140x11 | 160x14 | 200x19 | 200x24 | 250x28 | 300x38 | 350x42 | 350x48 | 400x55 |
| **S052** | | B5 | B5 | B5 | B5 | | | | |
| **S053** | B5 | B5 | B5 | B5 | | | | | |
| **S062** | | B5 | B5 | B5 | B5 | | | | |
| **S063** | | B5 | B5 | B5 | | | | | |
| **S082** | | | B5 | B5 | B5 | B5 | | | |
| **S083** | | B5 | B5 | B5 | B5 | | | | |
| **S102** | | | B5 | B5 | B5 | B5 | B5 | | |
| **S103** | | B5 | B5 | B5 | B5 | | | | |
| **S122** | | | B5 | B5 | B5 | B5 | B5 | B5 | B5 |
| **S123** | | | B5 | B5 | B5 | B5 | | | |

# 4.5 ARO DE APRIETE



Pulir y desengrasar las superficies de fijación. Respetar el par de apriete indicado para los tornillos ($M_T$).
El aro de apriete está diseñado solo para transmitir el par de salida.
En caso posiciones de montaje con cargas radiales y/o axiales contacte con el servicio técnico.

Accesorio certificado sólo ATEX 3G/3D.

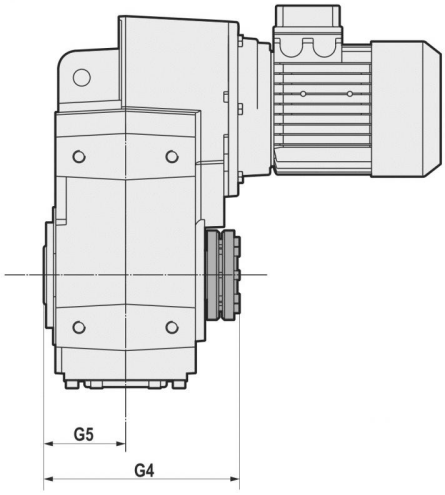


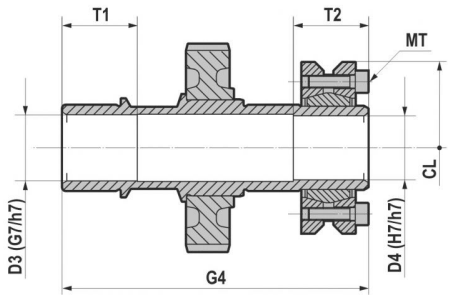


| | D3 | D4 | G4 | G5 | T1 | T2 | CL | MT 12.9 [Nm] |
|---|---|---|---|---|---|---|---|---|
| **S052/S053** | 31 | 30 | 152 | 60 | 35 | 35 | 74 | 15 |
| **S062/S063** | 36 | 35 | 173 | 70 | 40 | 35 | 80 | 15 |
| **S082/S083** | 41 | 40 | 217 | 90 | 50 | 40 | 100 | 15 |
| **S102/S103** | 51 | 50 | 248 | 105 | 55 | 40 | 115 | 15 |
| **S122/S123** | 61 | 60 | 282 | 120 | 60 | 50 | 145 | 40 |

# 4.6 RETENES REFORZADOS



Los retenes reforzados de efectúan mediante retén estándar con anillo VRM.
Bajo pedido el reductor puede suministrarse con retenes de fluoroelastómero FPM (FKM).

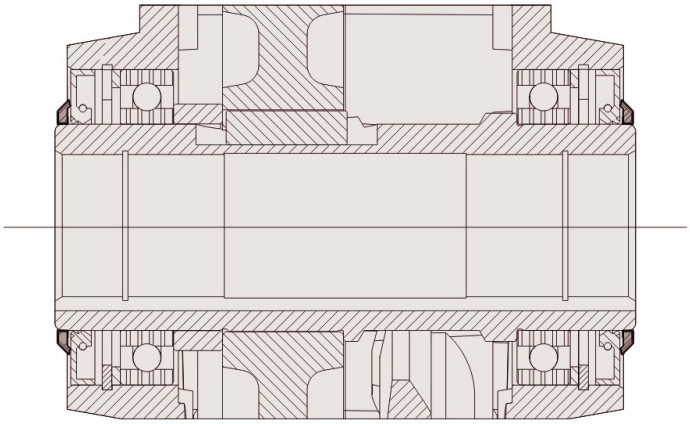

# 4.7 KIT DE MONTAJE/DESMONTAJE



Kit de montaje/desmontaje de los reductores con eje hueco y chaveta. Bajo pedido el suministro comprende:

1. Tornillo de fijación
2. Anillo de retención
3. Tuerca de fijación
4. Arandela de empuje

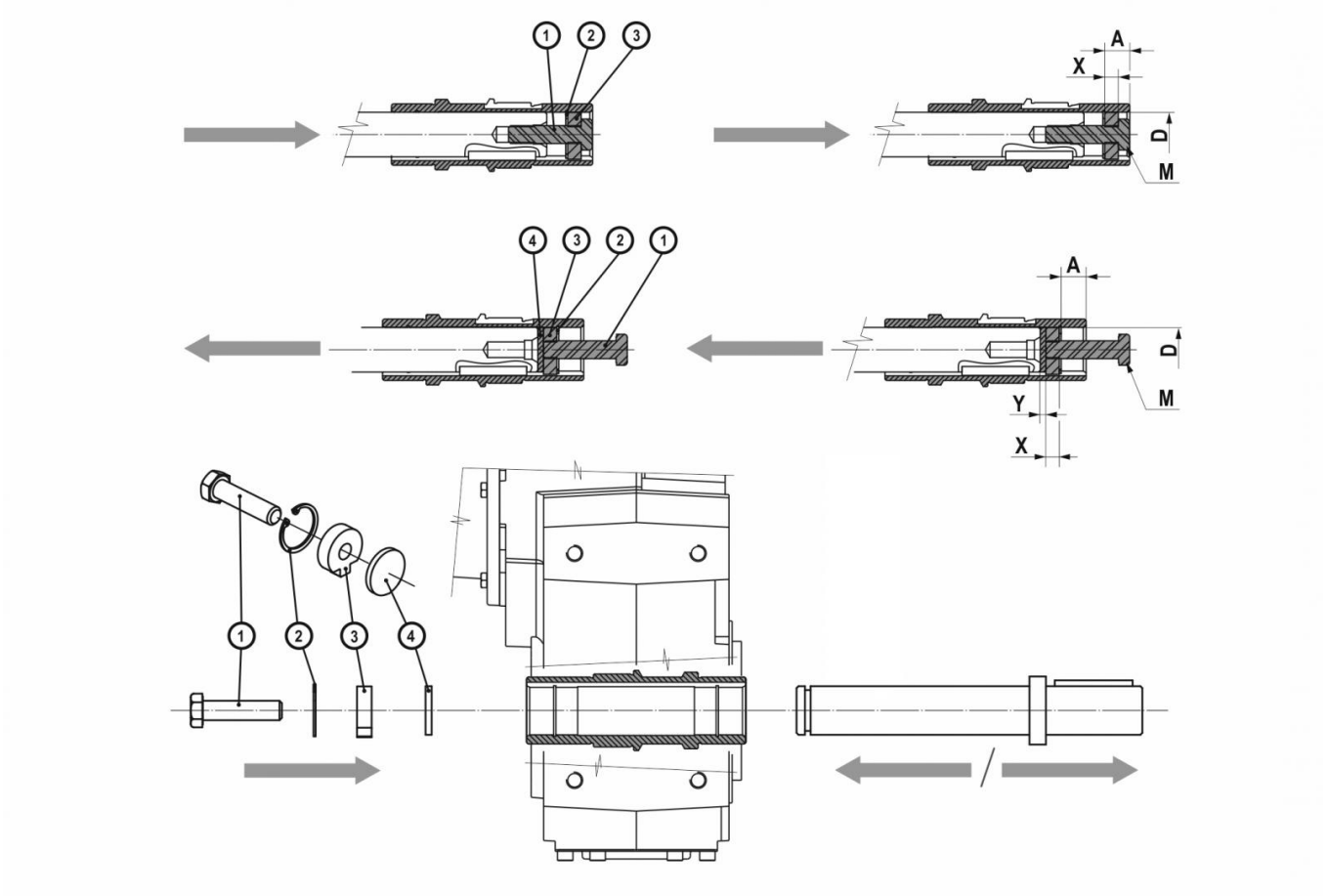


| | D | A | X | Y | M |
|---|---|---|---|---|---|
| **S052/S053** | 30 | 13,8 | 10 | 5 | M10x35 |
| **S062/S063** | 35 | 12 | 12 | 5 | M16x50 |
| **S082/S083** | 40 | 22,25 | 12 | 5 | M16x50 |
| | 45 | | | | |
| **S102/S103** | 50 | 25 | 12 | 5 | M16x50 |
| **S122/S123** | 60 | 28 | 16 | 5 | M20x70 |

# 5.1 S MOTORREDUCTORES (50Hz)



En caso de indicación “Ex”, consultar la ASISTENCIA TÉCNICA MOTOVARIO.

## 0.09 kW

| n2 [rpm] | M2 [Nm] | fs | i | Reductor | Motor | Fr2 D [N] | Fr2 C-L [N] |
|---|---|---|---|---|---|---|---|
| 7.3 | 111 | 2.7 | 117.48 | S053 | 63A6 | 6000 | 6000 |
| 6.3 | 130 | 2.3 | 137.45 | S053 | 63A6 | 6000 | 6000 |
| 4.8 | 168 | 1.8 | 177.55 | S053 | 63A6 | 6000 | 6000 |
| 4.3 | 188 | 1.6 | 198.45 | S053 | 63A6 | 6000 | 6000 |
| 4.0 | 207 | 1.4 | 217.64 | S053 | 63A6 | 6000 | 6000 |
| 3.4 | 243 | 1.2 | 256.33 | S053 | 63A6 | 6000 | 6000 |

## 0.12 kW

| n2 [rpm] | M2 [Nm] | fs | i | Reductor | Motor | Fr2 D [N] | Fr2 C-L [N] |
|---|---|---|---|---|---|---|---|
| 11.6 | 94 | 3.2 | 74.20 | S053 | 63B6 | 6000 | 6000 |
| 11.4 | 94 | 3.1 | 117.48 | S053 | 63A4 | 6000 | 6000 |
| 9.7 | 111 | 2.7 | 137.45 | S053 | 63A4 | 6000 | 6000 |
| 9.0 | 121 | 2.5 | 95.84 | S053 | 63B6 | 6000 | 6000 |
| 7.5 | 143 | 2.1 | 177.55 | S053 | 63A4 | 6000 | 6000 |
| 7.3 | 149 | 2.0 | 117.48 | S053 | 63B6 | 6000 | 6000 |
| 6.8 | 160 | 1.9 | 198.45 | S053 | 63A4 | 6000 | 6000 |
| 6.3 | 174 | 1.7 | 137.45 | S053 | 63B6 | 6000 | 6000 |
| 6.2 | 175 | 1.7 | 217.64 | S053 | 63A4 | 6000 | 6000 |
| 5.2 | 206 | 1.4 | 256.33 | S053 | 63A4 | 6000 | 6000 |
| 4.8 | 225 | 1.3 | 177.55 | S053 | 63B6 | 6000 | 6000 |
| 4.3 | 251 | 1.2 | 198.45 | S053 | 63B6 | 6000 | 6000 |
| 4.3 | 253 | 1.2 | 314.21 | S053 | 63A4 | 6000 | 6000 |
| 4.0 | 275 | 1.1 | 217.64 | S053 | 63B6 | 6000 | 6000 |

## 0.15 kW

| n2 [rpm] | M2 [Nm] | fs | i | Reductor | Motor | Fr2 D [N] | Fr2 C-L [N] |
|---|---|---|---|---|---|---|---|
| 10.9 | 125 | 2.4 | 74.20 | S053 | 63C6 | 6000 | 6000 |
| 8.5 | 161 | 1.9 | 95.84 | S053 | 63C6 | 6000 | 6000 |
| 6.9 | 197 | 1.5 | 117.48 | S053 | 63C6 | 6000 | 6000 |
| 5.9 | 231 | 1.3 | 137.45 | S053 | 63C6 | 6000 | 6000 |
| 4.6 | 298 | 1.0 | 177.55 | S053 | 63C6 | 6000 | 6000 |

## 0.18 kW

| n2 [rpm] | M2 [Nm] | fs | i | Reductor | Motor | Fr2 D [N] | Fr2 C-L [N] |
|---|---|---|---|---|---|---|---|
| 20.4 | 77 | Ex | 137.45 | S053 | 63A2 | 6000 | 6000 |
| 17.9 | 90 | 3.3 | 74.20 | S053 | 63B4 | 6000 | 6000 |
| 17.2 | 97 | 3.1 | 52.25 | S052 | 71A6 | 6000 | 6000 |

# 5.1 S MOTORREDUCTORES (50Hz)



## 0.18 kW

| n2 [rpm] | M2 [Nm] | fs | i | Reductor | Motor | Fr2 D [N] | Fr2 C-L [N] |
|---|---|---|---|---|---|---|---|
| 15.8 | 99 | Ex | 177.55 | S053 | 63A2 | 6000 | 6000 |
| 15.6 | 107 | 2.8 | 57.86 | S052 | 71A6 | 6000 | 6000 |
| 14.1 | 111 | Ex | 198.45 | S053 | 63A2 | 6000 | 6000 |
| 13.9 | 116 | 2.6 | 95.84 | S053 | 63B4 | 6000 | 6000 |
| 12.9 | 121 | Ex | 217.64 | S053 | 63A2 | 6000 | 6000 |
| 12.4 | 135 | 2.2 | 72.83 | S052 | 71A6 | 6000 | 6000 |
| 12.1 | 135 | 2.2 | 74.20 | S053 | 71A6 | 6000 | 6000 |
| 11.3 | 143 | 2.1 | 117.48 | S053 | 63B4 | 6000 | 6000 |
| 10.9 | 143 | Ex | 256.33 | S053 | 63A2 | 6000 | 6000 |
| 9.7 | 167 | 1.8 | 137.45 | S053 | 63B4 | 6000 | 6000 |
| 9.4 | 174 | 1.7 | 95.84 | S053 | 71A6 | 6000 | 6000 |
| 9.0 | 181 | 2.8 | 99.89 | S063 | 71A6 | 10000 | 4000 |
| 8.9 | 175 | Ex | 314.21 | S053 | 63A2 | 6000 | 6000 |
| 7.7 | 213 | 1.4 | 117.48 | S053 | 71A6 | 6000 | 6000 |
| 7.5 | 216 | 1.4 | 177.55 | S053 | 63B4 | 6000 | 6000 |
| 7.1 | 229 | 2.2 | 126.43 | S063 | 71A6 | 10000 | 4000 |
| 6.7 | 241 | 1.3 | 198.45 | S053 | 63B4 | 6000 | 6000 |
| 6.5 | 249 | 1.2 | 137.45 | S053 | 71A6 | 6000 | 6000 |
| 6.1 | 264 | 1.1 | 217.64 | S053 | 63B4 | 6000 | 6000 |
| 6.0 | 274 | 1.9 | 150.85 | S063 | 71A6 | 10000 | 4000 |
| 5.7 | 288 | 3.0 | 158.76 | S083 | 71A6 | 18000 | 7200 |
| 4.9 | 336 | 1.5 | 185.05 | S063 | 71A6 | 10000 | 4000 |
| 4.9 | 335 | 2.5 | 184.88 | S083 | 71A6 | 18000 | 7200 |
| 4.4 | 368 | 2.3 | 203.11 | S083 | 71A6 | 18000 | 7200 |
| 4.1 | 395 | 1.3 | 217.79 | S063 | 71A6 | 10000 | 4000 |
| 3.6 | 454 | 1.9 | 250.50 | S083 | 71A6 | 18000 | 7200 |
| 3.4 | 484 | 1.1 | 267.16 | S063 | 71A6 | 10000 | 4000 |
| 3.3 | 497 | 2.7 | 274.20 | S103 | 71A6 | 22000 | 9000 |
| 3.1 | 530 | 1.6 | 292.36 | S083 | 71A6 | 18000 | 7200 |
| 2.9 | 573 | 1.5 | 315.73 | S083 | 71A6 | 18000 | 7200 |
| 2.8 | 582 | 2.4 | 320.79 | S103 | 71A6 | 22000 | 9000 |
| 2.6 | 627 | 2.2 | 345.60 | S103 | 71A6 | 22000 | 9000 |
| 2.5 | 654 | 1.3 | 360.58 | S083 | 71A6 | 18000 | 7200 |
| 2.3 | 716 | 1.9 | 394.69 | S103 | 71A6 | 22000 | 9000 |

## 0.22 kW

| n2 [rpm] | M2 [Nm] | fs | i | Reductor | Motor | Fr2 D [N] | Fr2 C-L [N] |
|---|---|---|---|---|---|---|---|
| 17.9 | 110 | 2.7 | 74.20 | S053 | 63C4 | 6000 | 6000 |
| 13.9 | 142 | 2.1 | 95.84 | S053 | 63C4 | 6000 | 6000 |
| 11.3 | 174 | 1.7 | 117.48 | S053 | 63C4 | 6000 | 6000 |
| 9.7 | 204 | 1.5 | 137.45 | S053 | 63C4 | 6000 | 6000 |
| 7.5 | 264 | 1.1 | 177.55 | S053 | 63C4 | 6000 | 6000 |
| 6.7 | 295 | 1.0 | 198.45 | S053 | 63C4 | 6000 | 6000 |

# 5.1 S MOTORREDUCTORES (50Hz)



## 0.25 kW

| n2 [rpm] | M2 [Nm] | fs | i | Reductor | Motor | Fr2 D [N] | Fr2 C-L [N] |
|---|---|---|---|---|---|---|---|
| 30.0 | 77 | 2.7 | 30.00 | S052 | 71B6 | 6000 | 6000 |
| 29.2 | 74 | Ex | 95.84 | S053 | 63B2 | 6000 | 6000 |
| 27.6 | 84 | 3.1 | 32.55 | S052 | 71B6 | 6000 | 6000 |
| 24.6 | 94 | 3.0 | 36.55 | S052 | 71B6 | 6000 | 6000 |
| 24.0 | 95 | 3.1 | 57.86 | S052 | 71A4 | 6000 | 6000 |
| 23.8 | 91 | Ex | 117.48 | S053 | 63B2 | 6000 | 6000 |
| 22.6 | 103 | 2.9 | 39.90 | S052 | 71B6 | 6000 | 6000 |
| 21.1 | 110 | 2.7 | 42.63 | S052 | 71B6 | 6000 | 6000 |
| 20.4 | 106 | Ex | 137.45 | S053 | 63B2 | 6000 | 6000 |
| 19.1 | 121 | 2.5 | 47.20 | S052 | 71B6 | 6000 | 6000 |
| 19.1 | 120 | 2.5 | 72.83 | S052 | 71A4 | 6000 | 6000 |
| 18.7 | 120 | 2.5 | 74.20 | S053 | 71A4 | 6000 | 6000 |
| 17.8 | 126 | 2.4 | 74.20 | S053 | 63D4 | 6000 | 6000 |
| 17.2 | 134 | 2.2 | 52.25 | S052 | 71B6 | 6000 | 6000 |
| 15.8 | 137 | Ex | 177.55 | S053 | 63B2 | 6000 | 6000 |
| 15.6 | 149 | 2.0 | 57.86 | S052 | 71B6 | 6000 | 6000 |
| 14.5 | 155 | 1.9 | 95.84 | S053 | 71A4 | 6000 | 6000 |
| 14.1 | 153 | Ex | 198.45 | S053 | 63B2 | 6000 | 6000 |
| 13.9 | 161 | 3.2 | 99.89 | S063 | 71A4 | 10000 | 4000 |
| 13.8 | 163 | 1.8 | 95.84 | S053 | 63D4 | 6000 | 6000 |
| 13.3 | 174 | 2.9 | 67.47 | S062 | 71B6 | 10000 | 4000 |
| 12.9 | 168 | Ex | 217.64 | S053 | 63B2 | 6000 | 6000 |
| 12.4 | 187 | 1.6 | 72.83 | S052 | 71B6 | 6000 | 6000 |
| 12.1 | 187 | 1.6 | 74.20 | S053 | 71B6 | 6000 | 6000 |
| 11.8 | 190 | 1.6 | 117.48 | S053 | 71A4 | 6000 | 6000 |
| 11.2 | 200 | 1.5 | 117.48 | S053 | 63D4 | 6000 | 6000 |
| 11.1 | 205 | 2.5 | 81.43 | S063 | 71B6 | 10000 | 4000 |
| 11.0 | 204 | 2.5 | 126.43 | S063 | 71A4 | 10000 | 4000 |
| 10.9 | 198 | Ex | 256.33 | S053 | 63B2 | 6000 | 6000 |
| 10.1 | 222 | 1.4 | 137.45 | S053 | 71A4 | 6000 | 6000 |
| 9.6 | 234 | 1.3 | 137.45 | S053 | 63D4 | 6000 | 6000 |
| 9.4 | 241 | 1.2 | 95.84 | S053 | 71B6 | 6000 | 6000 |
| 9.2 | 244 | 2.1 | 150.85 | S063 | 71A4 | 10000 | 4000 |
| 9.0 | 252 | 2.0 | 99.89 | S063 | 71B6 | 10000 | 4000 |
| 8.8 | 256 | 3.3 | 158.76 | S083 | 71A4 | 18000 | 7200 |
| 7.8 | 287 | 1.0 | 177.55 | S053 | 71A4 | 6000 | 6000 |
| 7.7 | 296 | 1.0 | 117.48 | S053 | 71B6 | 6000 | 6000 |
| 7.7 | 295 | 2.9 | 117.17 | S083 | 71B6 | 18000 | 7200 |
| 7.5 | 299 | 1.7 | 185.05 | S063 | 71A4 | 10000 | 4000 |
| 7.5 | 299 | 2.8 | 184.88 | S083 | 71A4 | 18000 | 7200 |
| 7.1 | 318 | 1.6 | 126.43 | S063 | 71B6 | 10000 | 4000 |
| 7.0 | 324 | 2.6 | 128.73 | S083 | 71B6 | 18000 | 7200 |
| 6.8 | 328 | 2.6 | 203.11 | S083 | 71A4 | 18000 | 7200 |
| 6.4 | 352 | 1.5 | 217.79 | S063 | 71A4 | 10000 | 4000 |
| 6.0 | 380 | 1.3 | 150.85 | S063 | 71B6 | 10000 | 4000 |

# 5.1 S MOTORREDUCTORES (50Hz)



## 0.25 kW

| n2 [rpm] | M2 [Nm] | fs | i | Reductor | Motor | Fr2 D [N] | Fr2 C-L [N] |
|---|---|---|---|---|---|---|---|
| 5.7 | 400 | 2.1 | 158.76 | S083 | 71B6 | 18000 | 7200 |
| 5.5 | 404 | 2.1 | 250.50 | S083 | 71A4 | 18000 | 7200 |
| 5.2 | 431 | 1.2 | 267.16 | S063 | 71A4 | 10000 | 4000 |
| 5.2 | 438 | 3.1 | 173.78 | S103 | 71B6 | 22000 | 9000 |
| 5.1 | 443 | 3.1 | 274.20 | S103 | 71A4 | 22000 | 9000 |
| 4.9 | 466 | 1.1 | 185.05 | S063 | 71B6 | 10000 | 4000 |
| 4.9 | 466 | 1.8 | 184.88 | S083 | 71B6 | 18000 | 7200 |
| 4.8 | 472 | 1.8 | 292.36 | S083 | 71A4 | 18000 | 7200 |
| 4.4 | 512 | 1.7 | 203.11 | S083 | 71B6 | 18000 | 7200 |
| 4.4 | 510 | 1.7 | 315.73 | S083 | 71A4 | 18000 | 7200 |
| 4.4 | 512 | 2.7 | 203.11 | S103 | 71B6 | 22000 | 9000 |
| 4.3 | 518 | 2.6 | 320.79 | S103 | 71A4 | 22000 | 9000 |
| 4.0 | 561 | 2.4 | 222.85 | S103 | 71B6 | 22000 | 9000 |
| 4.0 | 558 | 2.4 | 345.60 | S103 | 71A4 | 22000 | 9000 |
| 3.9 | 582 | 1.5 | 360.58 | S083 | 71A4 | 18000 | 7200 |
| 3.6 | 631 | 1.3 | 250.50 | S083 | 71B6 | 18000 | 7200 |
| 3.5 | 637 | 2.1 | 394.69 | S103 | 71A4 | 22000 | 9000 |
| 3.3 | 691 | 2.0 | 274.20 | S103 | 71B6 | 22000 | 9000 |
| 3.1 | 736 | 1.1 | 292.36 | S083 | 71B6 | 18000 | 7200 |
| 2.9 | 795 | 1.1 | 315.73 | S083 | 71B6 | 18000 | 7200 |
| 2.8 | 808 | 1.7 | 320.79 | S103 | 71B6 | 22000 | 9000 |
| 2.6 | 870 | 1.6 | 345.60 | S103 | 71B6 | 22000 | 9000 |
| 2.3 | 994 | 1.4 | 394.69 | S103 | 71B6 | 22000 | 9000 |

## 0.37 kW

| n2 [rpm] | M2 [Nm] | fs | i | Reductor | Motor | Fr2 D [N] | Fr2 C-L [N] |
|---|---|---|---|---|---|---|---|
| 54.0 | 63 | 2.7 | 16.29 | S052 | 71C6 | 5904 | 5904 |
| 50.5 | 68 | 2.6 | 18.63 | S052 | 80A6 | 6000 | 6000 |
| 48.7 | 67 | Ex | 57.86 | S052 | 71A2 | 6000 | 6000 |
| 47.2 | 73 | 2.4 | 18.63 | S052 | 71C6 | 6000 | 6000 |
| 46.0 | 74 | 2.8 | 30.00 | S052 | 71B4 | 6000 | 6000 |
| 44.7 | 77 | 2.5 | 21.04 | S052 | 80A6 | 6000 | 6000 |
| 42.4 | 80 | 3.2 | 32.55 | S052 | 71B4 | 6000 | 6000 |
| 41.8 | 82 | 2.3 | 21.04 | S052 | 71C6 | 6000 | 6000 |
| 39.1 | 88 | 2.1 | 24.07 | S052 | 80A6 | 6000 | 6000 |
| 38.7 | 85 | Ex | 72.83 | S052 | 71A2 | 6000 | 6000 |
| 38.0 | 84 | Ex | 74.20 | S053 | 71A2 | 6000 | 6000 |
| 37.8 | 90 | 3.1 | 36.55 | S052 | 71B4 | 6000 | 6000 |
| 37.6 | 85 | Ex | 74.20 | S053 | 63C2 | 6000 | 6000 |
| 36.6 | 94 | 2.0 | 24.07 | S052 | 71C6 | 6000 | 6000 |
| 36.5 | 94 | 2.2 | 25.79 | S052 | 80A6 | 6000 | 6000 |
| 34.6 | 98 | 3.0 | 39.90 | S052 | 71B4 | 6000 | 6000 |
| 34.1 | 100 | 2.1 | 25.79 | S052 | 71C6 | 6000 | 6000 |

# 5.1 S MOTORREDUCTORES (50Hz)



## 0.37 kW

| n2 [rpm] | M2 [Nm] | fs | i | Reductor | Motor | Fr2 D [N] | Fr2 C-L [N] |
|---|---|---|---|---|---|---|---|
| 33.8 | 101 | 2.1 | 27.81 | S052 | 80A6 | 6000 | 6000 |
| 32.4 | 105 | 2.8 | 42.63 | S052 | 71B4 | 6000 | 6000 |
| 31.6 | 108 | 1.9 | 27.81 | S052 | 71C6 | 6000 | 6000 |
| 31.3 | 109 | 1.9 | 30.00 | S052 | 80A6 | 6000 | 6000 |
| 29.4 | 109 | Ex | 95.84 | S053 | 71A2 | 6000 | 6000 |
| 29.3 | 117 | 1.8 | 30.00 | S052 | 71C6 | 6000 | 6000 |
| 29.2 | 116 | 2.6 | 47.20 | S052 | 71B4 | 6000 | 6000 |
| 29.1 | 110 | Ex | 95.84 | S053 | 63C2 | 6000 | 6000 |
| 28.9 | 119 | 2.2 | 32.55 | S052 | 80A6 | 6000 | 6000 |
| 28.2 | 114 | Ex | 99.89 | S063 | 71A2 | 10000 | 4000 |
| 27.0 | 127 | 2.0 | 32.55 | S052 | 71C6 | 6000 | 6000 |
| 26.4 | 128 | 2.3 | 52.25 | S052 | 71B4 | 6000 | 6000 |
| 25.7 | 133 | 2.1 | 36.55 | S052 | 80A6 | 6000 | 6000 |
| 24.1 | 142 | 2.0 | 36.55 | S052 | 71C6 | 6000 | 6000 |
| 24.0 | 134 | Ex | 117.48 | S053 | 71A2 | 6000 | 6000 |
| 23.8 | 142 | 2.1 | 57.86 | S052 | 71B4 | 6000 | 6000 |
| 23.7 | 135 | Ex | 117.48 | S053 | 63C2 | 6000 | 6000 |
| 23.6 | 145 | 2.0 | 39.90 | S052 | 80A6 | 6000 | 6000 |
| 22.3 | 144 | Ex | 126.43 | S063 | 71A2 | 10000 | 4000 |
| 22.1 | 155 | 1.9 | 39.90 | S052 | 71C6 | 6000 | 6000 |
| 22.1 | 155 | 1.9 | 42.63 | S052 | 80A6 | 6000 | 6000 |
| 21.5 | 159 | 3.2 | 43.64 | S062 | 80A6 | 10000 | 4000 |
| 20.6 | 166 | 1.8 | 42.63 | S052 | 71C6 | 6000 | 6000 |
| 20.5 | 156 | Ex | 137.45 | S053 | 71A2 | 6000 | 6000 |
| 20.5 | 166 | 3.1 | 67.47 | S062 | 71B4 | 10000 | 4000 |
| 20.4 | 168 | 3.0 | 46.10 | S062 | 80A6 | 10000 | 4000 |
| 20.3 | 158 | Ex | 137.45 | S053 | 63C2 | 6000 | 6000 |
| 20.2 | 170 | 3.0 | 43.64 | S062 | 71C6 | 10000 | 4000 |
| 19.9 | 172 | 1.7 | 47.20 | S052 | 80A6 | 6000 | 6000 |
| 19.1 | 179 | 2.8 | 46.10 | S062 | 71C6 | 10000 | 4000 |
| 18.9 | 179 | 1.7 | 72.83 | S052 | 71B4 | 6000 | 6000 |
| 18.7 | 171 | Ex | 150.85 | S063 | 71A2 | 10000 | 4000 |
| 18.6 | 184 | 1.6 | 47.20 | S052 | 71C6 | 6000 | 6000 |
| 18.6 | 179 | 1.7 | 74.20 | S053 | 71B4 | 6000 | 6000 |
| 18.0 | 190 | 1.6 | 52.25 | S052 | 80A6 | 6000 | 6000 |
| 17.6 | 195 | 2.6 | 53.53 | S062 | 80A6 | 10000 | 4000 |
| 17.1 | 200 | 2.5 | 55.00 | S062 | 80A6 | 10000 | 4000 |
| 16.9 | 196 | 2.6 | 81.43 | S063 | 71B4 | 10000 | 4000 |
| 16.8 | 203 | 1.5 | 52.25 | S052 | 71C6 | 6000 | 6000 |
| 16.4 | 208 | 2.4 | 53.53 | S062 | 71C6 | 10000 | 4000 |
| 16.2 | 211 | 1.4 | 57.86 | S052 | 80A6 | 6000 | 6000 |
| 16.0 | 214 | 2.4 | 55.00 | S062 | 71C6 | 10000 | 4000 |
| 15.9 | 202 | Ex | 177.55 | S053 | 71A2 | 6000 | 6000 |
| 15.7 | 204 | Ex | 177.55 | S053 | 63C2 | 6000 | 6000 |
| 15.3 | 210 | Ex | 184.88 | S083 | 71A2 | 18000 | 7200 |

# 5.1 S MOTORREDUCTORES (50Hz)



## 0.37 kW

| n2 [rpm] | M2 [Nm] | fs | i | Reductor | Motor | Fr2 D [N] | Fr2 C-L [N] |
|---|---|---|---|---|---|---|---|
| 15.2 | 225 | 1.3 | 57.86 | S052 | 71C6 | 6000 | 6000 |
| 15.2 | 210 | Ex | 185.05 | S063 | 71A2 | 10000 | 4000 |
| 14.4 | 231 | 1.3 | 95.84 | S053 | 71B4 | 6000 | 6000 |
| 14.2 | 226 | Ex | 198.45 | S053 | 71A2 | 6000 | 6000 |
| 14.1 | 228 | Ex | 198.45 | S053 | 63C2 | 6000 | 6000 |
| 13.9 | 246 | 2.1 | 67.47 | S062 | 80A6 | 10000 | 4000 |
| 13.9 | 231 | Ex | 203.11 | S083 | 71A2 | 18000 | 7200 |
| 13.8 | 240 | 2.1 | 99.89 | S063 | 71B4 | 10000 | 4000 |
| 13.0 | 263 | 1.9 | 67.47 | S062 | 71C6 | 10000 | 4000 |
| 12.9 | 265 | 1.1 | 72.83 | S052 | 80A6 | 6000 | 6000 |
| 12.9 | 248 | Ex | 217.79 | S063 | 71A2 | 10000 | 4000 |
| 12.7 | 265 | 1.1 | 74.20 | S053 | 80A6 | 6000 | 6000 |
| 12.7 | 265 | 3.2 | 74.18 | S083 | 80A6 | 18000 | 7200 |
| 12.1 | 284 | 1.1 | 72.83 | S052 | 71C6 | 6000 | 6000 |
| 11.9 | 283 | 1.1 | 74.20 | S053 | 71C6 | 6000 | 6000 |
| 11.8 | 282 | 3.0 | 117.17 | S083 | 71B4 | 18000 | 7200 |
| 11.7 | 283 | 1.0 | 117.48 | S053 | 71B4 | 6000 | 6000 |
| 11.5 | 291 | 1.8 | 81.43 | S063 | 80A6 | 10000 | 4000 |
| 11.3 | 285 | Ex | 250.50 | S083 | 71A2 | 18000 | 7200 |
| 10.9 | 304 | 1.7 | 126.43 | S063 | 71B4 | 10000 | 4000 |
| 10.8 | 310 | 1.6 | 81.43 | S063 | 71C6 | 10000 | 4000 |
| 10.7 | 310 | 2.7 | 128.73 | S083 | 71B4 | 18000 | 7200 |
| 10.6 | 304 | Ex | 267.16 | S063 | 71A2 | 10000 | 4000 |
| 10.3 | 327 | 2.6 | 91.49 | S083 | 80A6 | 18000 | 7200 |
| 9.6 | 332 | Ex | 292.36 | S083 | 71A2 | 18000 | 7200 |
| 9.4 | 356 | 1.4 | 99.89 | S063 | 80A6 | 10000 | 4000 |
| 9.1 | 363 | 1.4 | 150.85 | S063 | 71B4 | 10000 | 4000 |
| 8.9 | 359 | Ex | 315.73 | S083 | 71A2 | 18000 | 7200 |
| 8.8 | 381 | 1.3 | 99.89 | S063 | 71C6 | 10000 | 4000 |
| 8.7 | 382 | 2.2 | 158.76 | S083 | 71B4 | 18000 | 7200 |
| 8.0 | 418 | 2.0 | 117.17 | S083 | 80A6 | 18000 | 7200 |
| 8.0 | 421 | 3.2 | 110.55 | S103 | 71C6 | 22000 | 9000 |
| 7.9 | 418 | 3.3 | 173.78 | S103 | 71B4 | 22000 | 9000 |
| 7.8 | 410 | Ex | 360.58 | S083 | 71A2 | 18000 | 7200 |
| 7.5 | 445 | 1.2 | 185.05 | S063 | 71B4 | 10000 | 4000 |
| 7.5 | 447 | 1.9 | 117.17 | S083 | 71C6 | 18000 | 7200 |
| 7.5 | 445 | 1.9 | 184.88 | S083 | 71B4 | 18000 | 7200 |
| 7.4 | 451 | 1.1 | 126.43 | S063 | 80A6 | 10000 | 4000 |
| 7.3 | 459 | 1.9 | 128.73 | S083 | 80A6 | 18000 | 7200 |
| 7.3 | 459 | 3.0 | 128.73 | S103 | 80A6 | 22000 | 9000 |
| 7.0 | 482 | 1.1 | 126.43 | S063 | 71C6 | 10000 | 4000 |
| 6.8 | 491 | 1.7 | 128.73 | S083 | 71C6 | 18000 | 7200 |
| 6.8 | 489 | 1.7 | 203.11 | S083 | 71B4 | 18000 | 7200 |
| 6.8 | 491 | 2.8 | 128.73 | S103 | 71C6 | 22000 | 9000 |
| 6.8 | 489 | 2.8 | 203.11 | S103 | 71B4 | 22000 | 9000 |

# 5.1 S MOTORREDUCTORES (50Hz)



## 0.37 kW

| n2 [rpm] | M2 [Nm] | fs | i | Reductor | Motor | Fr2 D [N] | Fr2 C-L [N] |
|---|---|---|---|---|---|---|---|
| 6.7 | 504 | 2.7 | 141.24 | S103 | 80A6 | 22000 | 9000 |
| 6.2 | 538 | 2.5 | 141.24 | S103 | 71C6 | 22000 | 9000 |
| 6.2 | 536 | 2.5 | 222.85 | S103 | 71B4 | 22000 | 9000 |
| 5.9 | 567 | 1.5 | 158.76 | S083 | 80A6 | 18000 | 7200 |
| 5.5 | 605 | 1.4 | 158.76 | S083 | 71C6 | 18000 | 7200 |
| 5.5 | 603 | 1.4 | 250.50 | S083 | 71B4 | 18000 | 7200 |
| 5.4 | 620 | 2.2 | 173.78 | S103 | 80A6 | 22000 | 9000 |
| 5.1 | 660 | 1.3 | 184.88 | S083 | 80A6 | 18000 | 7200 |
| 5.1 | 662 | 2.1 | 173.78 | S103 | 71C6 | 22000 | 9000 |
| 5.0 | 660 | 2.1 | 274.20 | S103 | 71B4 | 22000 | 9000 |
| 4.8 | 705 | 1.2 | 184.88 | S083 | 71C6 | 18000 | 7200 |
| 4.7 | 704 | 1.2 | 292.36 | S083 | 71B4 | 18000 | 7200 |
| 4.6 | 725 | 1.2 | 203.11 | S083 | 80A6 | 18000 | 7200 |
| 4.6 | 725 | 1.9 | 203.11 | S103 | 80A6 | 22000 | 9000 |
| 4.4 | 760 | 1.1 | 315.73 | S083 | 71B4 | 18000 | 7200 |
| 4.3 | 774 | 1.1 | 203.11 | S083 | 71C6 | 18000 | 7200 |
| 4.3 | 774 | 1.8 | 203.11 | S103 | 71C6 | 22000 | 9000 |
| 4.3 | 772 | 1.8 | 320.79 | S103 | 71B4 | 22000 | 9000 |
| 4.2 | 795 | 1.7 | 222.85 | S103 | 80A6 | 22000 | 9000 |
| 4.0 | 832 | 1.6 | 345.60 | S103 | 71B4 | 22000 | 9000 |
| 3.9 | 850 | 1.6 | 222.85 | S103 | 71C6 | 22000 | 9000 |
| 3.9 | 853 | 3.0 | 238.93 | S123 | 80A6 | 30000 | 11200 |
| 3.5 | 950 | 1.4 | 394.69 | S103 | 71B4 | 22000 | 9000 |
| 3.4 | 979 | 1.4 | 274.20 | S103 | 80A6 | 22000 | 9000 |
| 3.4 | 1000 | 2.6 | 280.10 | S123 | 80A6 | 30000 | 11200 |
| 3.2 | 1045 | 1.3 | 274.20 | S103 | 71C6 | 22000 | 9000 |
| 3.1 | 1075 | 2.4 | 301.16 | S123 | 80A6 | 30000 | 11200 |
| 2.9 | 1145 | 1.2 | 320.79 | S103 | 80A6 | 22000 | 9000 |
| 2.7 | 1223 | 1.1 | 320.79 | S103 | 71C6 | 22000 | 9000 |
| 2.7 | 1233 | 1.1 | 345.60 | S103 | 80A6 | 22000 | 9000 |
| 2.7 | 1227 | 2.1 | 343.93 | S123 | 80A6 | 30000 | 11200 |
| 2.5 | 1317 | 1.0 | 345.60 | S103 | 71C6 | 22000 | 9000 |

## 0.55 kW

| n2 [rpm] | M2 [Nm] | fs | i | Reductor | Motor | Fr2 D [N] | Fr2 C-L [N] |
|---|---|---|---|---|---|---|---|
| 107.8 | 47 | 2.6 | 8.63 | S052 | 80B6 | 4719 | 4719 |
| 86.3 | 56 | Ex | 32.55 | S052 | 71B2 | 5046 | 5046 |
| 83.5 | 61 | 2.2 | 11.14 | S052 | 80B6 | 5079 | 5079 |
| 76.9 | 63 | Ex | 36.55 | S052 | 71B2 | 5215 | 5215 |
| 75.1 | 67 | 2.6 | 18.63 | S052 | 80A4 | 5236 | 5236 |
| 73.5 | 69 | 2.5 | 18.63 | S052 | 71C4 | 5267 | 5267 |
| 70.4 | 69 | Ex | 39.90 | S052 | 71B2 | 5346 | 5346 |
| 68.1 | 75 | 2.0 | 13.66 | S052 | 80B6 | 5377 | 5377 |

# 5.1 S MOTORREDUCTORES (50Hz)



## 0.55 kW

| n2 [rpm] | M2 [Nm] | fs | i | Reductor | Motor | Fr2 D [N] | Fr2 C-L [N] |
|---|---|---|---|---|---|---|---|
| 66.6 | 76 | 2.5 | 21.04 | S052 | 80A4 | 5415 | 5415 |
| 65.9 | 74 | Ex | 42.63 | S052 | 71B2 | 5445 | 5445 |
| 65.1 | 77 | 2.4 | 21.04 | S052 | 71C4 | 5448 | 5448 |
| 60.9 | 84 | 2.1 | 15.27 | S052 | 80B6 | 5544 | 5544 |
| 59.5 | 82 | Ex | 47.20 | S052 | 71B2 | 5600 | 5600 |
| 58.2 | 87 | 2.2 | 24.07 | S052 | 80A4 | 5618 | 5618 |
| 57.1 | 89 | 2.0 | 16.29 | S052 | 80B6 | 5641 | 5641 |
| 56.9 | 89 | 2.1 | 24.07 | S052 | 71C4 | 5651 | 5651 |
| 54.3 | 93 | 2.2 | 25.79 | S052 | 80A4 | 5723 | 5723 |
| 53.8 | 90 | Ex | 52.25 | S052 | 71B2 | 5756 | 5756 |
| 53.1 | 95 | 2.2 | 25.79 | S052 | 71C4 | 5756 | 5756 |
| 50.3 | 100 | 2.1 | 27.81 | S052 | 80A4 | 5838 | 5838 |
| 49.9 | 102 | 1.7 | 18.63 | S052 | 80B6 | 5846 | 5846 |
| 49.3 | 102 | 2.0 | 27.81 | S052 | 71C4 | 5872 | 5872 |
| 48.6 | 100 | Ex | 57.86 | S052 | 71B2 | 5915 | 5915 |
| 46.7 | 108 | 1.9 | 30.00 | S052 | 80A4 | 5955 | 5955 |
| 45.7 | 110 | 1.9 | 30.00 | S052 | 71C4 | 5989 | 5989 |
| 44.2 | 115 | 1.6 | 21.04 | S052 | 80B6 | 6000 | 6000 |
| 43.0 | 117 | 2.2 | 32.55 | S052 | 80A4 | 6000 | 6000 |
| 42.1 | 120 | 2.1 | 32.55 | S052 | 71C4 | 6000 | 6000 |
| 41.7 | 117 | Ex | 67.47 | S062 | 71B2 | 10000 | 4000 |
| 40.1 | 127 | 2.7 | 23.18 | S062 | 80B6 | 10000 | 4000 |
| 38.6 | 132 | 1.4 | 24.07 | S052 | 80B6 | 6000 | 6000 |
| 38.6 | 126 | Ex | 72.83 | S052 | 71B2 | 6000 | 6000 |
| 38.3 | 132 | 2.1 | 36.55 | S052 | 80A4 | 6000 | 6000 |
| 37.9 | 126 | Ex | 74.20 | S053 | 71B2 | 6000 | 6000 |
| 37.5 | 135 | 2.1 | 36.55 | S052 | 71C4 | 6000 | 6000 |
| 37.0 | 138 | 2.5 | 25.14 | S062 | 80B6 | 10000 | 4000 |
| 36.1 | 141 | 1.5 | 25.79 | S052 | 80B6 | 6000 | 6000 |
| 35.1 | 144 | 2.1 | 39.90 | S052 | 80A4 | 6000 | 6000 |
| 34.5 | 138 | Ex | 81.43 | S063 | 71B2 | 10000 | 4000 |
| 34.3 | 147 | 2.0 | 39.90 | S052 | 71C4 | 6000 | 6000 |
| 33.6 | 151 | 2.3 | 27.66 | S062 | 80B6 | 10000 | 4000 |
| 33.4 | 152 | 1.4 | 27.81 | S052 | 80B6 | 6000 | 6000 |
| 32.8 | 154 | 1.9 | 42.63 | S052 | 80A4 | 6000 | 6000 |
| 32.1 | 157 | 1.9 | 42.63 | S052 | 71C4 | 6000 | 6000 |
| 32.1 | 157 | 3.2 | 43.64 | S062 | 80A4 | 10000 | 4000 |
| 31.4 | 161 | 3.2 | 43.64 | S062 | 71C4 | 10000 | 4000 |
| 31.0 | 164 | 1.3 | 30.00 | S052 | 80B6 | 6000 | 6000 |
| 31.0 | 164 | 2.2 | 30.00 | S062 | 80B6 | 10000 | 4000 |
| 30.4 | 166 | 3.1 | 46.10 | S062 | 80A4 | 10000 | 4000 |
| 29.7 | 170 | 1.8 | 47.20 | S052 | 80A4 | 6000 | 6000 |
| 29.7 | 170 | 3.0 | 46.10 | S062 | 71C4 | 10000 | 4000 |
| 29.3 | 163 | Ex | 95.84 | S053 | 71B2 | 6000 | 6000 |
| 29.0 | 174 | 1.7 | 47.20 | S052 | 71C4 | 6000 | 6000 |

# 5.1 S MOTORREDUCTORES (50Hz)



## 0.55 kW

| n2 [rpm] | M2 [Nm] | fs | i | Reductor | Motor | Fr2 D [N] | Fr2 C-L [N] |
|---|---|---|---|---|---|---|---|
| 28.6 | 178 | 1.4 | 32.55 | S052 | 80B6 | 6000 | 6000 |
| 28.1 | 169 | Ex | 99.89 | S063 | 71B2 | 10000 | 4000 |
| 26.8 | 188 | 1.6 | 52.25 | S052 | 80A4 | 6000 | 6000 |
| 26.2 | 192 | 1.5 | 52.25 | S052 | 71C4 | 6000 | 6000 |
| 26.2 | 193 | 2.6 | 53.53 | S062 | 80A4 | 10000 | 4000 |
| 25.6 | 197 | 2.6 | 53.53 | S062 | 71C4 | 10000 | 4000 |
| 25.5 | 198 | 2.6 | 55.00 | S062 | 80A4 | 10000 | 4000 |
| 25.4 | 200 | 1.4 | 36.55 | S052 | 80B6 | 6000 | 6000 |
| 25.4 | 200 | 2.5 | 36.57 | S062 | 80B6 | 10000 | 4000 |
| 24.9 | 202 | 2.5 | 55.00 | S062 | 71C4 | 10000 | 4000 |
| 24.2 | 208 | 1.4 | 57.86 | S052 | 80A4 | 6000 | 6000 |
| 24.0 | 199 | Ex | 117.17 | S083 | 71B2 | 18000 | 7200 |
| 23.9 | 199 | Ex | 117.48 | S053 | 71B2 | 6000 | 6000 |
| 23.7 | 213 | 1.4 | 57.86 | S052 | 71C4 | 6000 | 6000 |
| 23.6 | 216 | 2.4 | 39.38 | S062 | 80B6 | 10000 | 4000 |
| 23.3 | 218 | 1.4 | 39.90 | S052 | 80B6 | 6000 | 6000 |
| 22.2 | 214 | Ex | 126.43 | S063 | 71B2 | 10000 | 4000 |
| 21.8 | 233 | 1.3 | 42.63 | S052 | 80B6 | 6000 | 6000 |
| 21.8 | 218 | Ex | 128.73 | S083 | 71B2 | 18000 | 7200 |
| 21.3 | 239 | 2.1 | 43.64 | S062 | 80B6 | 10000 | 4000 |
| 20.8 | 243 | 2.1 | 67.47 | S062 | 80A4 | 10000 | 4000 |
| 20.4 | 233 | Ex | 137.45 | S053 | 71B2 | 6000 | 6000 |
| 20.3 | 248 | 2.1 | 67.47 | S062 | 71C4 | 10000 | 4000 |
| 20.2 | 252 | 2.0 | 46.10 | S062 | 80B6 | 10000 | 4000 |
| 19.7 | 258 | 1.2 | 47.20 | S052 | 80B6 | 6000 | 6000 |
| 19.2 | 262 | 1.1 | 72.83 | S052 | 80A4 | 6000 | 6000 |
| 18.9 | 262 | 1.1 | 74.20 | S053 | 80A4 | 6000 | 6000 |
| 18.9 | 262 | 3.2 | 74.18 | S083 | 80A4 | 18000 | 7200 |
| 18.8 | 268 | 1.1 | 72.83 | S052 | 71C4 | 6000 | 6000 |
| 18.6 | 256 | Ex | 150.85 | S063 | 71B2 | 10000 | 4000 |
| 18.5 | 267 | 1.1 | 74.20 | S053 | 71C4 | 6000 | 6000 |
| 18.5 | 275 | 3.1 | 50.25 | S082 | 80B6 | 18000 | 7200 |
| 17.8 | 286 | 1.0 | 52.25 | S052 | 80B6 | 6000 | 6000 |
| 17.7 | 269 | Ex | 158.76 | S083 | 71B2 | 18000 | 7200 |
| 17.4 | 293 | 1.7 | 53.53 | S062 | 80B6 | 10000 | 4000 |
| 17.2 | 287 | 1.8 | 81.43 | S063 | 80A4 | 10000 | 4000 |
| 17.1 | 297 | 2.9 | 54.27 | S082 | 80B6 | 18000 | 7200 |
| 16.9 | 301 | 1.7 | 55.00 | S062 | 80B6 | 10000 | 4000 |
| 16.8 | 293 | 1.7 | 81.43 | S063 | 71C4 | 10000 | 4000 |
| 15.3 | 323 | 2.6 | 91.49 | S083 | 80A4 | 18000 | 7200 |
| 15.2 | 314 | Ex | 185.05 | S063 | 71B2 | 10000 | 4000 |
| 15.2 | 313 | Ex | 184.88 | S083 | 71B2 | 18000 | 7200 |
| 15.0 | 339 | 2.5 | 61.98 | S082 | 80B6 | 18000 | 7200 |
| 14.0 | 352 | 1.4 | 99.89 | S063 | 80A4 | 10000 | 4000 |
| 13.8 | 369 | 1.4 | 67.47 | S062 | 80B6 | 10000 | 4000 |

# 5.1 S MOTORREDUCTORES (50Hz)



## 0.55 kW

| n2 [rpm] | M2 [Nm] | fs | i | Reductor | Motor | Fr2 D [N] | Fr2 C-L [N] |
|---|---|---|---|---|---|---|---|
| 13.8 | 362 | 2.3 | 67.52 | S083 | 80B6 | 18000 | 7200 |
| 13.8 | 344 | Ex | 203.11 | S083 | 71B2 | 18000 | 7200 |
| 13.7 | 360 | 1.4 | 99.89 | S063 | 71C4 | 10000 | 4000 |
| 12.9 | 369 | Ex | 217.79 | S063 | 71B2 | 10000 | 4000 |
| 12.5 | 398 | 2.1 | 74.18 | S083 | 80B6 | 18000 | 7200 |
| 11.9 | 413 | 2.1 | 117.17 | S083 | 80A4 | 18000 | 7200 |
| 11.7 | 422 | 2.0 | 117.17 | S083 | 71C4 | 18000 | 7200 |
| 11.4 | 437 | 1.2 | 81.43 | S063 | 80B6 | 10000 | 4000 |
| 11.4 | 436 | 3.1 | 81.39 | S103 | 80B6 | 22000 | 9000 |
| 11.2 | 425 | Ex | 250.50 | S083 | 71B2 | 18000 | 7200 |
| 11.1 | 446 | 1.1 | 126.43 | S063 | 80A4 | 10000 | 4000 |
| 10.9 | 454 | 1.9 | 128.73 | S083 | 80A4 | 18000 | 7200 |
| 10.9 | 454 | 3.0 | 128.73 | S103 | 80A4 | 22000 | 9000 |
| 10.8 | 456 | 1.1 | 126.43 | S063 | 71C4 | 10000 | 4000 |
| 10.6 | 464 | 1.8 | 128.73 | S083 | 71C4 | 18000 | 7200 |
| 10.6 | 464 | 2.9 | 128.73 | S103 | 71C4 | 22000 | 9000 |
| 10.2 | 491 | 1.7 | 91.49 | S083 | 80B6 | 18000 | 7200 |
| 9.9 | 498 | 2.7 | 141.24 | S103 | 80A4 | 22000 | 9000 |
| 9.7 | 509 | 2.7 | 141.24 | S103 | 71C4 | 22000 | 9000 |
| 9.6 | 496 | Ex | 292.36 | S083 | 71B2 | 18000 | 7200 |
| 9.3 | 537 | 2.5 | 100.15 | S103 | 80B6 | 22000 | 9000 |
| 8.9 | 535 | Ex | 315.73 | S083 | 71B2 | 18000 | 7200 |
| 8.8 | 560 | 1.5 | 158.76 | S083 | 80A4 | 18000 | 7200 |
| 8.6 | 572 | 1.5 | 158.76 | S083 | 71C4 | 18000 | 7200 |
| 8.4 | 593 | 2.3 | 110.55 | S103 | 80B6 | 22000 | 9000 |
| 8.1 | 613 | 2.2 | 173.78 | S103 | 80A4 | 22000 | 9000 |
| 7.9 | 628 | 1.4 | 117.17 | S083 | 80B6 | 18000 | 7200 |
| 7.9 | 626 | 2.2 | 173.78 | S103 | 71C4 | 22000 | 9000 |
| 7.8 | 611 | Ex | 360.58 | S083 | 71B2 | 18000 | 7200 |
| 7.6 | 652 | 1.3 | 184.88 | S083 | 80A4 | 18000 | 7200 |
| 7.4 | 666 | 1.3 | 184.88 | S083 | 71C4 | 18000 | 7200 |
| 7.2 | 690 | 1.2 | 128.73 | S083 | 80B6 | 18000 | 7200 |
| 7.2 | 690 | 2.0 | 128.73 | S103 | 80B6 | 22000 | 9000 |
| 6.9 | 716 | 1.2 | 203.11 | S083 | 80A4 | 18000 | 7200 |
| 6.9 | 716 | 1.9 | 203.11 | S103 | 80A4 | 22000 | 9000 |
| 6.7 | 732 | 1.2 | 203.11 | S083 | 71C4 | 18000 | 7200 |
| 6.7 | 732 | 1.9 | 203.11 | S103 | 71C4 | 22000 | 9000 |
| 6.6 | 757 | 1.8 | 141.24 | S103 | 80B6 | 22000 | 9000 |
| 6.3 | 786 | 1.7 | 222.85 | S103 | 80A4 | 22000 | 9000 |
| 6.1 | 803 | 1.7 | 222.85 | S103 | 71C4 | 22000 | 9000 |
| 6.1 | 812 | 3.2 | 151.43 | S123 | 80B6 | 30000 | 11200 |
| 5.9 | 843 | 3.0 | 238.93 | S123 | 80A4 | 30000 | 11200 |
| 5.4 | 932 | 1.5 | 173.78 | S103 | 80B6 | 22000 | 9000 |
| 5.2 | 952 | 2.7 | 177.53 | S123 | 80B6 | 30000 | 11200 |
| 5.1 | 967 | 1.4 | 274.20 | S103 | 80A4 | 22000 | 9000 |

# 5.1 S MOTORREDUCTORES (50Hz)



## 0.55 kW

| n2 [rpm] | M2 [Nm] | fs | i | Reductor | Motor | Fr2 D [N] | Fr2 C-L [N] |
|---|---|---|---|---|---|---|---|
| 5.0 | 988 | 1.4 | 274.20 | S103 | 71C4 | 22000 | 9000 |
| 5.0 | 988 | 2.6 | 280.10 | S123 | 80A4 | 30000 | 11200 |
| 4.8 | 1043 | 2.4 | 194.59 | S123 | 80B6 | 30000 | 11200 |
| 4.6 | 1089 | 1.3 | 203.11 | S103 | 80B6 | 22000 | 9000 |
| 4.6 | 1062 | 2.4 | 301.16 | S123 | 80A4 | 30000 | 11200 |
| 4.4 | 1131 | 1.2 | 320.79 | S103 | 80A4 | 22000 | 9000 |
| 4.3 | 1156 | 1.2 | 320.79 | S103 | 71C4 | 22000 | 9000 |
| 4.2 | 1195 | 1.1 | 222.85 | S103 | 80B6 | 22000 | 9000 |
| 4.1 | 1219 | 1.1 | 345.60 | S103 | 80A4 | 22000 | 9000 |
| 4.1 | 1213 | 2.1 | 343.93 | S123 | 80A4 | 30000 | 11200 |
| 4.0 | 1246 | 1.1 | 345.60 | S103 | 71C4 | 22000 | 9000 |
| 3.9 | 1281 | 2.0 | 238.93 | S123 | 80B6 | 30000 | 11200 |
| 3.3 | 1502 | 1.7 | 280.10 | S123 | 80B6 | 30000 | 11200 |
| 3.1 | 1615 | 1.6 | 301.16 | S123 | 80B6 | 30000 | 11200 |
| 2.7 | 1844 | 1.4 | 343.93 | S123 | 80B6 | 30000 | 11200 |

## 0.75 kW

| n2 [rpm] | M2 [Nm] | fs | i | Reductor | Motor | Fr2 D [N] | Fr2 C-L [N] |
|---|---|---|---|---|---|---|---|
| 133.6 | 50 | Ex | 21.04 | S052 | 80A2 | 4364 | 4364 |
| 133.1 | 50 | Ex | 21.04 | S052 | 71C2 | 4369 | 4369 |
| 125.7 | 55 | 2.5 | 11.14 | S052 | 80B4 | 4430 | 4430 |
| 116.8 | 57 | Ex | 24.07 | S052 | 80A2 | 4534 | 4534 |
| 116.3 | 57 | Ex | 24.07 | S052 | 71C2 | 4538 | 4538 |
| 109.0 | 61 | Ex | 25.79 | S052 | 80A2 | 4622 | 4622 |
| 108.6 | 61 | Ex | 25.79 | S052 | 71C2 | 4627 | 4627 |
| 106.7 | 65 | 1.9 | 8.63 | S052 | 80C6 | 4633 | 4633 |
| 106.7 | 65 | 1.9 | 8.63 | S052 | 90S6 | 4633 | 4633 |
| 102.5 | 67 | 2.3 | 13.66 | S052 | 80B4 | 4688 | 4688 |
| 101.0 | 66 | Ex | 27.81 | S052 | 80A2 | 4720 | 4720 |
| 100.7 | 66 | Ex | 27.81 | S052 | 71C2 | 4725 | 4725 |
| 93.7 | 71 | Ex | 30.00 | S052 | 80A2 | 4819 | 4819 |
| 93.3 | 71 | Ex | 30.00 | S052 | 71C2 | 4824 | 4824 |
| 91.7 | 75 | 2.3 | 15.27 | S052 | 80B4 | 4833 | 4833 |
| 86.3 | 77 | Ex | 32.55 | S052 | 80A2 | 4927 | 4927 |
| 86.0 | 80 | 2.2 | 16.29 | S052 | 80B4 | 4916 | 4916 |
| 86.0 | 77 | Ex | 32.55 | S052 | 71C2 | 4932 | 4932 |
| 82.6 | 84 | 1.6 | 11.14 | S052 | 80C6 | 4964 | 4964 |
| 82.6 | 84 | 1.6 | 11.14 | S052 | 90S6 | 4964 | 4964 |
| 76.9 | 86 | Ex | 36.55 | S052 | 80A2 | 5082 | 5082 |
| 76.6 | 87 | Ex | 36.55 | S052 | 71C2 | 5086 | 5086 |
| 75.1 | 92 | 1.9 | 18.63 | S052 | 80B4 | 5094 | 5094 |
| 70.4 | 94 | Ex | 39.90 | S052 | 80A2 | 5200 | 5200 |
| 70.2 | 95 | Ex | 39.90 | S052 | 71C2 | 5205 | 5205 |

# 5.1 S MOTORREDUCTORES (50Hz)



## 0.75 kW

| n2 [rpm] | M2 [Nm] | fs | i | Reductor | Motor | Fr2 D [N] | Fr2 C-L [N] |
|---|---|---|---|---|---|---|---|
| 67.4 | 103 | 1.5 | 13.66 | S052 | 80C6 | 5233 | 5233 |
| 67.4 | 103 | 1.5 | 13.66 | S052 | 90S6 | 5233 | 5233 |
| 66.6 | 103 | 1.8 | 21.04 | S052 | 80B4 | 5255 | 5255 |
| 65.9 | 101 | Ex | 42.63 | S052 | 80A2 | 5289 | 5289 |
| 65.7 | 101 | Ex | 42.63 | S052 | 71C2 | 5294 | 5294 |
| 60.2 | 115 | 1.5 | 15.27 | S052 | 80C6 | 5381 | 5381 |
| 60.2 | 115 | 1.5 | 15.27 | S052 | 90S6 | 5381 | 5381 |
| 59.5 | 111 | Ex | 47.20 | S052 | 80A2 | 5427 | 5427 |
| 59.3 | 112 | Ex | 47.20 | S052 | 71C2 | 5432 | 5432 |
| 58.2 | 118 | 1.6 | 24.07 | S052 | 80B4 | 5435 | 5435 |
| 57.7 | 120 | 2.7 | 15.94 | S062 | 80C6 | 9788 | 3915 |
| 57.7 | 120 | 2.7 | 15.94 | S062 | 90S6 | 9788 | 3915 |
| 56.5 | 123 | 1.4 | 16.29 | S052 | 80C6 | 5467 | 5467 |
| 56.5 | 123 | 1.4 | 16.29 | S052 | 90S6 | 5467 | 5467 |
| 55.7 | 123 | 2.8 | 25.14 | S062 | 80B4 | 9895 | 3958 |
| 54.3 | 127 | 1.6 | 25.79 | S052 | 80B4 | 5527 | 5527 |
| 53.8 | 123 | Ex | 52.25 | S052 | 80A2 | 5565 | 5565 |
| 53.6 | 124 | Ex | 52.25 | S052 | 71C2 | 5570 | 5570 |
| 52.5 | 126 | Ex | 53.53 | S062 | 80A2 | 10000 | 4000 |
| 52.3 | 127 | Ex | 53.53 | S062 | 71C2 | 10000 | 4000 |
| 51.1 | 130 | Ex | 55.00 | S062 | 80A2 | 10000 | 4000 |
| 50.9 | 130 | Ex | 55.00 | S062 | 71C2 | 10000 | 4000 |
| 50.6 | 136 | 2.5 | 27.66 | S062 | 80B4 | 10000 | 4000 |
| 50.3 | 137 | 1.5 | 27.81 | S052 | 80B4 | 5627 | 5627 |
| 49.4 | 141 | 1.2 | 18.63 | S052 | 80C6 | 5644 | 5644 |
| 49.4 | 141 | 1.2 | 18.63 | S052 | 90S6 | 5644 | 5644 |
| 48.6 | 137 | Ex | 57.86 | S052 | 80A2 | 5703 | 5703 |
| 48.4 | 137 | Ex | 57.86 | S052 | 71C2 | 5708 | 5708 |
| 47.1 | 148 | 2.2 | 19.55 | S062 | 80C6 | 10000 | 4000 |
| 47.1 | 148 | 2.2 | 19.55 | S062 | 90S6 | 10000 | 4000 |
| 46.7 | 147 | 1.4 | 30.00 | S052 | 80B4 | 5727 | 5727 |
| 46.7 | 147 | 2.4 | 30.00 | S062 | 80B4 | 10000 | 4000 |
| 43.7 | 159 | 1.2 | 21.04 | S052 | 80C6 | 5803 | 5803 |
| 43.7 | 159 | 1.2 | 21.04 | S052 | 90S6 | 5803 | 5803 |
| 43.0 | 160 | 1.6 | 32.55 | S052 | 80B4 | 5834 | 5834 |
| 41.7 | 159 | Ex | 67.47 | S062 | 80A2 | 10000 | 4000 |
| 41.5 | 160 | Ex | 67.47 | S062 | 71C2 | 10000 | 4000 |
| 39.7 | 175 | 1.9 | 23.18 | S062 | 80C6 | 10000 | 4000 |
| 39.7 | 175 | 1.9 | 23.18 | S062 | 90S6 | 10000 | 4000 |
| 38.6 | 172 | Ex | 72.83 | S052 | 80A2 | 6000 | 6000 |
| 38.4 | 173 | Ex | 72.83 | S052 | 71C2 | 6000 | 6000 |
| 38.3 | 179 | 1.6 | 36.55 | S052 | 80B4 | 5983 | 5983 |
| 38.3 | 180 | 2.8 | 36.57 | S062 | 80B4 | 10000 | 4000 |
| 38.2 | 182 | 1.0 | 24.07 | S052 | 80C6 | 5976 | 5976 |
| 38.2 | 182 | 1.0 | 24.07 | S052 | 90S6 | 5976 | 5976 |

# 5.1 S MOTORREDUCTORES (50Hz)



## 0.75 kW

| n2 [rpm] | M2 [Nm] | fs | i | Reductor | Motor | Fr2 D [N] | Fr2 C-L [N] |
|---|---|---|---|---|---|---|---|
| 37.9 | 172 | Ex | 74.20 | S053 | 80A2 | 6000 | 6000 |
| 37.7 | 172 | Ex | 74.20 | S053 | 71C2 | 6000 | 6000 |
| 36.6 | 190 | 1.8 | 25.14 | S062 | 80C6 | 10000 | 4000 |
| 36.6 | 190 | 1.8 | 25.14 | S062 | 90S6 | 10000 | 4000 |
| 35.7 | 195 | 1.1 | 25.79 | S052 | 80C6 | 6000 | 6000 |
| 35.7 | 195 | 1.1 | 25.79 | S052 | 90S6 | 6000 | 6000 |
| 35.6 | 193 | 2.6 | 39.38 | S062 | 80B4 | 10000 | 4000 |
| 35.1 | 196 | 1.5 | 39.90 | S052 | 80B4 | 6000 | 6000 |
| 34.5 | 188 | Ex | 81.43 | S063 | 80A2 | 10000 | 4000 |
| 34.4 | 189 | Ex | 81.43 | S063 | 71C2 | 10000 | 4000 |
| 33.8 | 205 | 1.0 | 27.81 | S052 | 90S6 | 6000 | 6000 |
| 33.3 | 209 | 1.7 | 27.66 | S062 | 80C6 | 10000 | 4000 |
| 33.3 | 209 | 1.7 | 27.66 | S062 | 90S6 | 10000 | 4000 |
| 32.8 | 209 | 1.4 | 42.63 | S052 | 80B4 | 6000 | 6000 |
| 32.1 | 214 | 2.4 | 43.64 | S062 | 80B4 | 10000 | 4000 |
| 30.7 | 226 | 1.6 | 30.00 | S062 | 80C6 | 10000 | 4000 |
| 30.7 | 226 | 1.6 | 30.00 | S062 | 90S6 | 10000 | 4000 |
| 30.7 | 212 | Ex | 91.49 | S083 | 80A2 | 18000 | 7025 |
| 30.4 | 226 | 2.3 | 46.10 | S062 | 80B4 | 10000 | 4000 |
| 29.7 | 232 | 1.3 | 47.20 | S052 | 80B4 | 6000 | 6000 |
| 29.3 | 222 | Ex | 95.84 | S053 | 80A2 | 6000 | 6000 |
| 29.2 | 222 | Ex | 95.84 | S053 | 71C2 | 6000 | 6000 |
| 28.3 | 246 | 1.0 | 32.55 | S052 | 80C6 | 6000 | 6000 |
| 28.3 | 246 | 1.0 | 32.55 | S052 | 90S6 | 6000 | 6000 |
| 28.1 | 231 | Ex | 99.89 | S063 | 80A2 | 10000 | 4000 |
| 28.0 | 232 | Ex | 99.89 | S063 | 71C2 | 10000 | 4000 |
| 26.8 | 257 | 1.2 | 52.25 | S052 | 80B4 | 6000 | 6000 |
| 26.4 | 264 | 3.2 | 34.91 | S082 | 80C6 | 18000 | 7200 |
| 26.4 | 264 | 3.2 | 34.91 | S082 | 90S6 | 18000 | 7200 |
| 26.2 | 263 | 1.9 | 53.53 | S062 | 80B4 | 10000 | 4000 |
| 25.8 | 267 | 3.2 | 54.27 | S082 | 80B4 | 18000 | 7200 |
| 25.5 | 270 | 1.9 | 55.00 | S062 | 80B4 | 10000 | 4000 |
| 25.2 | 276 | 1.0 | 36.55 | S052 | 80C6 | 6000 | 6000 |
| 25.2 | 276 | 1.0 | 36.55 | S052 | 90S6 | 6000 | 6000 |
| 25.2 | 276 | 1.8 | 36.57 | S062 | 80C6 | 10000 | 4000 |
| 25.2 | 276 | 1.8 | 36.57 | S062 | 90S6 | 10000 | 4000 |
| 24.2 | 284 | 1.0 | 57.86 | S052 | 80B4 | 6000 | 6000 |
| 24.0 | 271 | Ex | 117.17 | S083 | 80A2 | 18000 | 7200 |
| 23.9 | 272 | Ex | 117.17 | S083 | 71C2 | 18000 | 7200 |
| 23.6 | 295 | 1.0 | 39.90 | S052 | 90S6 | 6000 | 6000 |
| 23.4 | 297 | 1.7 | 39.38 | S062 | 80C6 | 10000 | 4000 |
| 23.4 | 297 | 1.7 | 39.38 | S062 | 90S6 | 10000 | 4000 |
| 23.0 | 302 | 2.8 | 40.05 | S082 | 80C6 | 18000 | 7200 |
| 23.0 | 302 | 2.8 | 40.05 | S082 | 90S6 | 18000 | 7200 |
| 22.6 | 304 | 2.8 | 61.98 | S082 | 80B4 | 18000 | 7200 |

# 5.1 S MOTORREDUCTORES (50Hz)



## 0.75 kW

| n2 [rpm] | M2 [Nm] | fs | i | Reductor | Motor | Fr2 D [N] | Fr2 C-L [N] |
|---|---|---|---|---|---|---|---|
| 22.2 | 292 | Ex | 126.43 | S063 | 80A2 | 10000 | 4000 |
| 22.1 | 293 | Ex | 126.43 | S063 | 71C2 | 10000 | 4000 |
| 21.8 | 299 | Ex | 128.73 | S083 | 71C2 | 18000 | 7200 |
| 21.8 | 298 | Ex | 128.73 | S083 | 80A2 | 18000 | 7200 |
| 21.4 | 325 | 2.6 | 43.05 | S082 | 80C6 | 18000 | 7200 |
| 21.4 | 325 | 2.6 | 43.05 | S082 | 90S6 | 18000 | 7200 |
| 21.1 | 329 | 1.5 | 43.64 | S062 | 80C6 | 10000 | 4000 |
| 21.1 | 329 | 1.5 | 43.64 | S062 | 90S6 | 10000 | 4000 |
| 20.8 | 331 | 1.5 | 67.47 | S062 | 80B4 | 10000 | 4000 |
| 20.7 | 325 | 2.6 | 67.52 | S083 | 80B4 | 18000 | 7200 |
| 20.0 | 348 | 1.5 | 46.10 | S062 | 80C6 | 10000 | 4000 |
| 20.0 | 348 | 1.5 | 46.10 | S062 | 90S6 | 10000 | 4000 |
| 18.9 | 357 | 2.4 | 74.18 | S083 | 80B4 | 18000 | 7200 |
| 18.6 | 350 | Ex | 150.85 | S063 | 71C2 | 10000 | 4000 |
| 18.6 | 349 | Ex | 150.85 | S063 | 80A2 | 10000 | 4000 |
| 18.3 | 379 | 2.2 | 50.25 | S082 | 80C6 | 18000 | 7200 |
| 18.3 | 379 | 2.2 | 50.25 | S082 | 90S6 | 18000 | 7200 |
| 17.7 | 367 | Ex | 158.76 | S083 | 80A2 | 18000 | 7200 |
| 17.6 | 368 | Ex | 158.76 | S083 | 71C2 | 18000 | 7200 |
| 17.2 | 404 | 1.3 | 53.53 | S062 | 80C6 | 10000 | 4000 |
| 17.2 | 404 | 1.3 | 53.53 | S062 | 90S6 | 10000 | 4000 |
| 17.2 | 392 | 1.3 | 81.43 | S063 | 80B4 | 10000 | 4000 |
| 17.0 | 410 | 2.1 | 54.27 | S082 | 80C6 | 18000 | 7200 |
| 17.0 | 410 | 2.1 | 54.27 | S082 | 90S6 | 18000 | 7200 |
| 16.7 | 415 | 1.2 | 55.00 | S062 | 80C6 | 10000 | 4000 |
| 16.7 | 415 | 1.2 | 55.00 | S062 | 90S6 | 10000 | 4000 |
| 16.7 | 416 | 2.7 | 55.14 | S102 | 80C6 | 22000 | 9000 |
| 16.7 | 416 | 2.7 | 55.14 | S102 | 90S6 | 22000 | 9000 |
| 15.5 | 448 | 3.0 | 59.40 | S102 | 80C6 | 22000 | 9000 |
| 15.5 | 448 | 3.0 | 59.40 | S102 | 90S6 | 22000 | 9000 |
| 15.3 | 440 | 1.9 | 91.49 | S083 | 80B4 | 18000 | 7200 |
| 15.2 | 428 | Ex | 185.05 | S063 | 80A2 | 10000 | 4000 |
| 15.2 | 427 | Ex | 184.88 | S083 | 80A2 | 18000 | 7200 |
| 15.1 | 429 | Ex | 185.05 | S063 | 71C2 | 10000 | 4000 |
| 15.1 | 429 | Ex | 184.88 | S083 | 71C2 | 18000 | 7200 |
| 14.8 | 468 | 1.8 | 61.98 | S082 | 80C6 | 18000 | 7200 |
| 14.8 | 468 | 1.8 | 61.98 | S082 | 90S6 | 18000 | 7200 |
| 14.0 | 480 | 1.1 | 99.89 | S063 | 80B4 | 10000 | 4000 |
| 14.0 | 482 | 2.8 | 100.15 | S103 | 80B4 | 22000 | 9000 |
| 13.8 | 471 | Ex | 203.11 | S083 | 71C2 | 18000 | 7200 |
| 13.8 | 470 | Ex | 203.11 | S083 | 80A2 | 18000 | 7200 |
| 13.6 | 509 | 1.0 | 67.47 | S062 | 80C6 | 10000 | 4000 |
| 13.6 | 509 | 1.0 | 67.47 | S062 | 90S6 | 10000 | 4000 |
| 13.6 | 499 | 1.7 | 67.52 | S083 | 80C6 | 18000 | 7200 |
| 13.6 | 499 | 1.7 | 67.52 | S083 | 90S6 | 18000 | 7200 |

# 5.1 S MOTORREDUCTORES (50Hz)



## 0.75 kW

| n2 [rpm] | M2 [Nm] | fs | i | Reductor | Motor | Fr2 D [N] | Fr2 C-L [N] |
|---|---|---|---|---|---|---|---|
| 13.6 | 512 | 2.7 | 67.84 | S102 | 80C6 | 22000 | 9000 |
| 13.6 | 512 | 2.7 | 67.84 | S102 | 90S6 | 22000 | 9000 |
| 12.7 | 532 | 2.6 | 110.55 | S103 | 80B4 | 22000 | 9000 |
| 12.4 | 548 | 1.6 | 74.18 | S083 | 80C6 | 18000 | 7200 |
| 12.4 | 548 | 1.6 | 74.18 | S083 | 90S6 | 18000 | 7200 |
| 12.4 | 548 | 2.5 | 74.18 | S103 | 80C6 | 22000 | 9000 |
| 12.4 | 548 | 2.5 | 74.18 | S103 | 90S6 | 22000 | 9000 |
| 11.9 | 564 | 1.5 | 117.17 | S083 | 80B4 | 18000 | 7200 |
| 11.3 | 602 | 2.3 | 81.39 | S103 | 80C6 | 22000 | 9000 |
| 11.3 | 602 | 2.3 | 81.39 | S103 | 90S6 | 22000 | 9000 |
| 11.2 | 581 | Ex | 250.50 | S083 | 71C2 | 18000 | 7200 |
| 11.2 | 579 | Ex | 250.50 | S083 | 80A2 | 18000 | 7200 |
| 10.9 | 619 | 1.4 | 128.73 | S083 | 80B4 | 18000 | 7200 |
| 10.9 | 619 | 2.2 | 128.73 | S103 | 80B4 | 22000 | 9000 |
| 10.1 | 676 | 1.3 | 91.49 | S083 | 80C6 | 18000 | 7200 |
| 10.1 | 676 | 1.3 | 91.49 | S083 | 90S6 | 18000 | 7200 |
| 9.9 | 679 | 2.0 | 141.24 | S103 | 80B4 | 22000 | 9000 |
| 9.6 | 678 | Ex | 292.36 | S083 | 71C2 | 18000 | 7200 |
| 9.6 | 676 | Ex | 292.36 | S083 | 80A2 | 18000 | 7200 |
| 9.2 | 740 | 1.8 | 100.15 | S103 | 80C6 | 22000 | 9000 |
| 9.2 | 740 | 1.8 | 100.15 | S103 | 90S6 | 22000 | 9000 |
| 8.8 | 764 | 1.1 | 158.76 | S083 | 80B4 | 18000 | 7200 |
| 8.3 | 817 | 1.7 | 110.55 | S103 | 80C6 | 22000 | 9000 |
| 8.3 | 817 | 1.7 | 110.55 | S103 | 90S6 | 22000 | 9000 |
| 8.2 | 832 | 3.1 | 112.52 | S123 | 80C6 | 30000 | 11200 |
| 8.2 | 832 | 3.1 | 112.52 | S123 | 90S6 | 30000 | 11200 |
| 8.1 | 836 | 1.6 | 173.78 | S103 | 80B4 | 22000 | 9000 |
| 8.0 | 848 | 1.0 | 117.17 | S083 | 90S6 | 18000 | 7200 |
| 7.9 | 854 | 3.0 | 177.53 | S123 | 80B4 | 30000 | 11200 |
| 7.5 | 912 | 2.8 | 123.33 | S123 | 80C6 | 30000 | 11200 |
| 7.5 | 912 | 2.8 | 123.33 | S123 | 90S6 | 30000 | 11200 |
| 7.2 | 936 | 2.7 | 194.59 | S123 | 80B4 | 30000 | 11200 |
| 7.1 | 951 | 1.4 | 128.73 | S103 | 80C6 | 22000 | 9000 |
| 7.1 | 951 | 1.4 | 128.73 | S103 | 90S6 | 22000 | 9000 |
| 6.9 | 977 | 1.4 | 203.11 | S103 | 80B4 | 22000 | 9000 |
| 6.9 | 989 | 2.6 | 133.78 | S123 | 80C6 | 30000 | 11200 |
| 6.9 | 989 | 2.6 | 133.78 | S123 | 90S6 | 30000 | 11200 |
| 6.5 | 1044 | 1.3 | 141.24 | S103 | 80C6 | 22000 | 9000 |
| 6.5 | 1044 | 1.3 | 141.24 | S103 | 90S6 | 22000 | 9000 |
| 6.3 | 1072 | 1.3 | 222.85 | S103 | 80B4 | 22000 | 9000 |
| 6.1 | 1119 | 2.3 | 151.43 | S123 | 80C6 | 30000 | 11200 |
| 6.1 | 1119 | 2.3 | 151.43 | S123 | 90S6 | 30000 | 11200 |
| 5.9 | 1149 | 2.2 | 238.93 | S123 | 80B4 | 30000 | 11200 |
| 5.3 | 1284 | 1.1 | 173.78 | S103 | 80C6 | 22000 | 9000 |
| 5.3 | 1284 | 1.1 | 173.78 | S103 | 90S6 | 22000 | 9000 |

# 5.1 S MOTORREDUCTORES (50Hz)



## 0.75 kW

| n2 [rpm] | M2 [Nm] | fs | i | Reductor | Motor | Fr2 D [N] | Fr2 C-L [N] |
|---|---|---|---|---|---|---|---|
| 5.2 | 1312 | 2.0 | 177.53 | S123 | 80C6 | 30000 | 11200 |
| 5.2 | 1312 | 2.0 | 177.53 | S123 | 90S6 | 30000 | 11200 |
| 5.1 | 1319 | 1.0 | 274.20 | S103 | 80B4 | 22000 | 9000 |
| 5.0 | 1347 | 1.9 | 280.10 | S123 | 80B4 | 30000 | 11200 |
| 4.7 | 1438 | 1.8 | 194.59 | S123 | 80C6 | 30000 | 11200 |
| 4.7 | 1438 | 1.8 | 194.59 | S123 | 90S6 | 30000 | 11200 |
| 4.6 | 1448 | 1.8 | 301.16 | S123 | 80B4 | 30000 | 11200 |
| 4.1 | 1654 | 1.5 | 343.93 | S123 | 80B4 | 30000 | 11200 |
| 3.9 | 1766 | 1.5 | 238.93 | S123 | 80C6 | 30000 | 11200 |
| 3.9 | 1766 | 1.5 | 238.93 | S123 | 90S6 | 30000 | 11200 |
| 3.3 | 2070 | 1.2 | 280.10 | S123 | 80C6 | 30000 | 11200 |
| 3.3 | 2070 | 1.2 | 280.10 | S123 | 90S6 | 30000 | 11200 |
| 3.1 | 2226 | 1.2 | 301.16 | S123 | 80C6 | 30000 | 11200 |
| 3.1 | 2226 | 1.2 | 301.16 | S123 | 90S6 | 30000 | 11200 |
| 2.7 | 2542 | 1.0 | 343.93 | S123 | 80C6 | 30000 | 11200 |
| 2.7 | 2542 | 1.0 | 343.93 | S123 | 90S6 | 30000 | 11200 |

## 0.92 kW

| n2 [rpm] | M2 [Nm] | fs | i | Reductor | Motor | Fr2 D [N] | Fr2 C-L [N] |
|---|---|---|---|---|---|---|---|
| 162.3 | 52 | 2.4 | 8.63 | S052 | 80C4 | 4061 | 4061 |
| 125.7 | 67 | 2.0 | 11.14 | S052 | 80C4 | 4358 | 4358 |
| 102.5 | 82 | 1.8 | 13.66 | S052 | 80C4 | 4599 | 4599 |
| 91.7 | 92 | 1.9 | 15.27 | S052 | 80C4 | 4734 | 4734 |
| 86.0 | 98 | 1.8 | 16.29 | S052 | 80C4 | 4811 | 4811 |
| 75.1 | 112 | 1.6 | 18.63 | S052 | 80C4 | 4973 | 4973 |
| 71.6 | 118 | 2.8 | 19.55 | S062 | 80C4 | 9080 | 3632 |
| 66.6 | 127 | 1.5 | 21.04 | S052 | 80C4 | 5119 | 5119 |
| 60.4 | 140 | 2.4 | 23.18 | S062 | 80C4 | 9509 | 3804 |
| 58.2 | 145 | 1.3 | 24.07 | S052 | 80C4 | 5279 | 5279 |
| 55.7 | 151 | 2.3 | 25.14 | S062 | 80C4 | 9717 | 3887 |
| 54.3 | 155 | 1.3 | 25.79 | S052 | 80C4 | 5360 | 5360 |
| 50.6 | 167 | 2.1 | 27.66 | S062 | 80C4 | 9962 | 3985 |
| 50.3 | 168 | 1.2 | 27.81 | S052 | 80C4 | 5447 | 5447 |
| 46.7 | 181 | 1.2 | 30.00 | S052 | 80C4 | 5533 | 5533 |
| 46.7 | 181 | 2.0 | 30.00 | S062 | 80C4 | 10000 | 4000 |
| 43.0 | 196 | 1.3 | 32.55 | S052 | 80C4 | 5624 | 5624 |
| 38.3 | 220 | 1.3 | 36.55 | S052 | 80C4 | 5747 | 5747 |
| 38.3 | 220 | 2.3 | 36.57 | S062 | 80C4 | 10000 | 4000 |
| 35.6 | 237 | 2.1 | 39.38 | S062 | 80C4 | 10000 | 4000 |
| 35.1 | 240 | 1.2 | 39.90 | S052 | 80C4 | 5836 | 5836 |
| 32.8 | 257 | 1.2 | 42.63 | S052 | 80C4 | 5900 | 5900 |
| 32.5 | 259 | 3.3 | 43.05 | S082 | 80C4 | 18000 | 6845 |
| 32.1 | 263 | 1.9 | 43.64 | S062 | 80C4 | 10000 | 4000 |

# 5.1 S MOTORREDUCTORES (50Hz)



## 0.92 kW

| n2 [rpm] | M2 [Nm] | fs | i | Reductor | Motor | Fr2 D [N] | Fr2 C-L [N] |
|---|---|---|---|---|---|---|---|
| 30.4 | 278 | 1.8 | 46.10 | S062 | 80C4 | 10000 | 4000 |
| 29.7 | 284 | 1.0 | 47.20 | S052 | 80C4 | 5993 | 5993 |
| 27.9 | 303 | 2.8 | 50.25 | S082 | 80C4 | 18000 | 7175 |
| 26.2 | 322 | 1.6 | 53.53 | S062 | 80C4 | 10000 | 4000 |
| 25.8 | 327 | 2.6 | 54.27 | S082 | 80C4 | 18000 | 7200 |
| 25.5 | 331 | 1.5 | 55.00 | S062 | 80C4 | 10000 | 4000 |
| 25.4 | 332 | 3.3 | 55.14 | S102 | 80C4 | 22000 | 9000 |
| 22.6 | 373 | 2.3 | 61.98 | S082 | 80C4 | 18000 | 7200 |
| 20.8 | 406 | 1.3 | 67.47 | S062 | 80C4 | 10000 | 4000 |
| 20.7 | 398 | 2.1 | 67.52 | S083 | 80C4 | 18000 | 7200 |
| 20.6 | 409 | 3.3 | 67.84 | S102 | 80C4 | 22000 | 9000 |
| 18.9 | 438 | 1.9 | 74.18 | S083 | 80C4 | 18000 | 7200 |
| 18.9 | 438 | 3.1 | 74.18 | S103 | 80C4 | 22000 | 9000 |
| 17.2 | 480 | 1.1 | 81.43 | S063 | 80C4 | 10000 | 4000 |
| 17.2 | 480 | 2.8 | 81.39 | S103 | 80C4 | 22000 | 9000 |
| 15.3 | 540 | 1.6 | 91.49 | S083 | 80C4 | 18000 | 7200 |
| 14.0 | 591 | 2.3 | 100.15 | S103 | 80C4 | 22000 | 9000 |
| 12.7 | 652 | 2.1 | 110.55 | S103 | 80C4 | 22000 | 9000 |
| 11.9 | 691 | 1.2 | 117.17 | S083 | 80C4 | 18000 | 7200 |
| 10.9 | 759 | 1.1 | 128.73 | S083 | 80C4 | 18000 | 7200 |
| 10.9 | 759 | 1.8 | 128.73 | S103 | 80C4 | 22000 | 9000 |
| 10.5 | 789 | 3.3 | 133.78 | S123 | 80C4 | 30000 | 11200 |
| 9.9 | 833 | 1.6 | 141.24 | S103 | 80C4 | 22000 | 9000 |
| 9.2 | 893 | 2.9 | 151.43 | S123 | 80C4 | 30000 | 11200 |
| 8.1 | 1025 | 1.3 | 173.78 | S103 | 80C4 | 22000 | 9000 |
| 7.9 | 1047 | 2.4 | 177.53 | S123 | 80C4 | 30000 | 11200 |
| 7.2 | 1148 | 2.2 | 194.59 | S123 | 80C4 | 30000 | 11200 |
| 6.9 | 1198 | 1.1 | 203.11 | S103 | 80C4 | 22000 | 9000 |
| 6.3 | 1315 | 1.0 | 222.85 | S103 | 80C4 | 22000 | 9000 |
| 5.9 | 1410 | 1.8 | 238.93 | S123 | 80C4 | 30000 | 11200 |
| 5.0 | 1652 | 1.5 | 280.10 | S123 | 80C4 | 30000 | 11200 |
| 4.6 | 1777 | 1.4 | 301.16 | S123 | 80C4 | 30000 | 11200 |
| 4.1 | 2029 | 1.3 | 343.93 | S123 | 80C4 | 30000 | 11200 |

## 1.10 kW

| n2 [rpm] | M2 [Nm] | fs | i | Reductor | Motor | Fr2 D [N] | Fr2 C-L [N] |
|---|---|---|---|---|---|---|---|
| 254.9 | 38 | Ex | 11.14 | S052 | 80B2 | 3537 | 3537 |
| 208.0 | 47 | Ex | 13.66 | S052 | 80B2 | 3749 | 3749 |
| 185.3 | 53 | Ex | 15.27 | S052 | 80B2 | 3871 | 3871 |
| 174.4 | 56 | Ex | 16.29 | S052 | 80B2 | 3937 | 3937 |
| 163.5 | 62 | 2.0 | 8.63 | S052 | 80D4 | 3994 | 3994 |
| 162.3 | 62 | 2.0 | 8.63 | S052 | 90S4 | 4002 | 4002 |
| 152.4 | 64 | Ex | 18.63 | S052 | 80B2 | 4083 | 4083 |

# 5.1 S MOTORREDUCTORES (50Hz)



## 1.10 kW

| n2 [rpm] | M2 [Nm] | fs | i | Reductor | Motor | Fr2 D [N] | Fr2 C-L [N] |
|---|---|---|---|---|---|---|---|
| 135.0 | 72 | Ex | 21.04 | S052 | 80B2 | 4218 | 4218 |
| 126.6 | 80 | 1.7 | 11.14 | S052 | 80D4 | 4273 | 4273 |
| 125.7 | 80 | 1.7 | 11.14 | S052 | 90S4 | 4281 | 4281 |
| 117.6 | 83 | Ex | 24.07 | S052 | 80B2 | 4372 | 4372 |
| 116.3 | 88 | 2.7 | 8.00 | S062 | 90L6 | 7819 | 3128 |
| 110.1 | 92 | 1.3 | 8.63 | S052 | 100LR6 | 4421 | 4421 |
| 109.8 | 89 | Ex | 25.79 | S052 | 80B2 | 4449 | 4449 |
| 107.8 | 94 | 1.3 | 8.63 | S052 | 90L6 | 4445 | 4445 |
| 103.2 | 98 | 1.6 | 13.66 | S052 | 80D4 | 4498 | 4498 |
| 102.7 | 95 | Ex | 27.66 | S062 | 80B2 | 8124 | 3250 |
| 102.5 | 98 | 1.5 | 13.66 | S052 | 90S4 | 4506 | 4506 |
| 101.8 | 96 | Ex | 27.81 | S052 | 80B2 | 4534 | 4534 |
| 99.5 | 102 | 2.5 | 9.55 | S062 | 100LR6 | 8166 | 3267 |
| 97.4 | 105 | 2.5 | 9.55 | S062 | 90L6 | 8215 | 3286 |
| 94.7 | 103 | Ex | 30.00 | S052 | 80B2 | 4615 | 4615 |
| 94.7 | 103 | Ex | 30.00 | S062 | 80B2 | 8310 | 3324 |
| 92.3 | 109 | 1.6 | 15.27 | S052 | 80D4 | 4621 | 4621 |
| 91.7 | 110 | 1.6 | 15.27 | S052 | 90S4 | 4629 | 4629 |
| 88.5 | 114 | 2.8 | 15.94 | S062 | 80D4 | 8442 | 3377 |
| 87.8 | 115 | 2.8 | 15.94 | S062 | 90S4 | 8458 | 3383 |
| 87.3 | 112 | Ex | 32.55 | S052 | 80B2 | 4707 | 4707 |
| 86.6 | 116 | 1.5 | 16.29 | S052 | 80D4 | 4692 | 4692 |
| 86.0 | 117 | 1.5 | 16.29 | S052 | 90S4 | 4700 | 4700 |
| 85.3 | 119 | 1.1 | 11.14 | S052 | 100LR6 | 4702 | 4702 |
| 83.5 | 122 | 1.1 | 11.14 | S052 | 90L6 | 4725 | 4725 |
| 81.1 | 126 | 2.2 | 11.71 | S062 | 100LR6 | 8634 | 3454 |
| 79.4 | 128 | 2.2 | 11.71 | S062 | 90L6 | 8684 | 3473 |
| 77.4 | 126 | Ex | 36.55 | S052 | 80B2 | 4840 | 4840 |
| 77.4 | 126 | Ex | 36.57 | S062 | 80B2 | 8781 | 3513 |
| 75.7 | 133 | 1.3 | 18.63 | S052 | 80D4 | 4838 | 4838 |
| 75.1 | 134 | 1.3 | 18.63 | S052 | 90S4 | 4846 | 4846 |
| 72.1 | 140 | 2.4 | 19.55 | S062 | 80D4 | 8917 | 3567 |
| 72.1 | 135 | Ex | 39.38 | S062 | 80B2 | 8948 | 3579 |
| 71.6 | 141 | 2.4 | 19.55 | S062 | 90S4 | 8934 | 3574 |
| 71.2 | 137 | Ex | 39.90 | S052 | 80B2 | 4933 | 4933 |
| 71.1 | 143 | 2.1 | 13.36 | S062 | 100LR6 | 8941 | 3576 |
| 69.6 | 146 | 1.0 | 13.66 | S052 | 100LR6 | 4920 | 4920 |
| 69.6 | 146 | 2.1 | 13.36 | S062 | 90L6 | 8991 | 3596 |
| 68.1 | 150 | 1.0 | 13.66 | S052 | 90L6 | 4942 | 4942 |
| 67.0 | 150 | 1.2 | 21.04 | S052 | 80D4 | 4968 | 4968 |
| 66.6 | 152 | 1.2 | 21.04 | S052 | 90S4 | 4975 | 4975 |
| 66.4 | 147 | Ex | 42.63 | S052 | 80B2 | 5009 | 5009 |
| 65.1 | 150 | Ex | 43.64 | S062 | 80B2 | 9194 | 3677 |
| 62.2 | 164 | 1.1 | 15.27 | S052 | 100LR6 | 5036 | 5036 |
| 61.4 | 159 | Ex | 46.10 | S062 | 80B2 | 9334 | 3734 |

# 5.1 S MOTORREDUCTORES (50Hz)



## 1.10 kW

| n2 [rpm] | M2 [Nm] | fs | i | Reductor | Motor | Fr2 D [N] | Fr2 C-L [N] |
|---|---|---|---|---|---|---|---|
| 60.9 | 167 | 1.0 | 15.27 | S052 | 90L6 | 5058 | 5058 |
| 60.8 | 166 | 2.0 | 23.18 | S062 | 80D4 | 9319 | 3728 |
| 60.4 | 167 | 2.0 | 23.18 | S062 | 90S4 | 9336 | 3734 |
| 60.2 | 162 | Ex | 47.20 | S052 | 80B2 | 5114 | 5114 |
| 59.6 | 171 | 1.9 | 15.94 | S062 | 100LR6 | 9357 | 3743 |
| 58.6 | 172 | 1.1 | 24.07 | S052 | 80D4 | 5107 | 5107 |
| 58.4 | 175 | 1.9 | 15.94 | S062 | 90L6 | 9407 | 3763 |
| 58.2 | 173 | 1.1 | 24.07 | S052 | 90S4 | 5114 | 5114 |
| 56.1 | 180 | 1.9 | 25.14 | S062 | 80D4 | 9512 | 3805 |
| 55.7 | 181 | 1.9 | 25.14 | S062 | 90S4 | 9529 | 3812 |
| 54.7 | 184 | 1.1 | 25.79 | S052 | 80D4 | 5176 | 5176 |
| 54.3 | 186 | 1.1 | 25.79 | S052 | 90S4 | 5183 | 5183 |
| 54.2 | 180 | Ex | 52.25 | S052 | 80B2 | 5224 | 5224 |
| 52.9 | 184 | Ex | 53.53 | S062 | 80B2 | 9695 | 3878 |
| 51.5 | 189 | Ex | 55.00 | S062 | 80B2 | 9760 | 3904 |
| 51.0 | 198 | 1.7 | 27.66 | S062 | 80D4 | 9739 | 3895 |
| 50.7 | 199 | 1.0 | 27.81 | S052 | 80D4 | 5250 | 5250 |
| 50.6 | 199 | 1.7 | 27.66 | S062 | 90S4 | 9756 | 3902 |
| 50.3 | 200 | 1.0 | 27.81 | S052 | 90S4 | 5257 | 5257 |
| 48.9 | 199 | Ex | 57.86 | S052 | 80B2 | 5326 | 5326 |
| 48.6 | 210 | 1.6 | 19.55 | S062 | 100LR6 | 9839 | 3936 |
| 47.6 | 214 | 1.6 | 19.55 | S062 | 90L6 | 9890 | 3956 |
| 47.2 | 216 | 2.6 | 20.14 | S082 | 100LR6 | 18000 | 6067 |
| 47.0 | 215 | 1.7 | 30.00 | S062 | 80D4 | 9932 | 3973 |
| 46.7 | 216 | 1.7 | 30.00 | S062 | 90S4 | 9948 | 3979 |
| 46.2 | 221 | 2.5 | 20.14 | S082 | 90L6 | 18000 | 6107 |
| 45.7 | 213 | Ex | 61.98 | S082 | 80B2 | 18000 | 6137 |
| 43.3 | 233 | 1.1 | 32.55 | S052 | 80D4 | 5394 | 5394 |
| 43.0 | 234 | 1.1 | 32.55 | S052 | 90S4 | 5401 | 5401 |
| 42.9 | 237 | 2.4 | 22.13 | S082 | 100LR6 | 18000 | 6244 |
| 42.1 | 227 | Ex | 67.52 | S083 | 80B2 | 18000 | 6299 |
| 42.0 | 242 | 2.4 | 22.13 | S082 | 90L6 | 18000 | 6285 |
| 41.9 | 232 | Ex | 67.47 | S062 | 80B2 | 10000 | 4000 |
| 41.0 | 249 | 1.4 | 23.18 | S062 | 100LR6 | 10000 | 4000 |
| 40.1 | 254 | 1.3 | 23.18 | S062 | 90L6 | 10000 | 4000 |
| 40.1 | 251 | 3.4 | 34.91 | S082 | 90S4 | 18000 | 6378 |
| 39.6 | 257 | 2.2 | 24.00 | S082 | 100LR6 | 18000 | 6402 |
| 38.8 | 263 | 2.2 | 24.00 | S082 | 90L6 | 18000 | 6443 |
| 38.6 | 261 | 1.1 | 36.55 | S052 | 80D4 | 5491 | 5491 |
| 38.6 | 262 | 1.9 | 36.57 | S062 | 80D4 | 10000 | 4000 |
| 38.3 | 263 | 1.1 | 36.55 | S052 | 90S4 | 5497 | 5497 |
| 38.3 | 263 | 1.9 | 36.57 | S062 | 90S4 | 10000 | 4000 |
| 38.1 | 250 | Ex | 74.18 | S083 | 80B2 | 18000 | 6490 |
| 37.8 | 270 | 1.3 | 25.14 | S062 | 100LR6 | 10000 | 4000 |
| 37.0 | 275 | 1.3 | 25.14 | S062 | 90L6 | 10000 | 4000 |

# 5.1 S MOTORREDUCTORES (50Hz)



## 1.10 kW

| n2 [rpm] | M2 [Nm] | fs | i | Reductor | Motor | Fr2 D [N] | Fr2 C-L [N] |
|---|---|---|---|---|---|---|---|
| 35.8 | 282 | 1.8 | 39.38 | S062 | 80D4 | 10000 | 4000 |
| 35.6 | 284 | 1.8 | 39.38 | S062 | 90S4 | 10000 | 4000 |
| 35.3 | 285 | 1.0 | 39.90 | S052 | 80D4 | 5558 | 5558 |
| 35.2 | 286 | 3.0 | 40.05 | S082 | 80D4 | 18000 | 6636 |
| 35.1 | 287 | 1.0 | 39.90 | S052 | 90S4 | 5563 | 5563 |
| 35.0 | 289 | 2.9 | 40.05 | S082 | 90S4 | 18000 | 6650 |
| 34.8 | 274 | Ex | 81.43 | S063 | 80B2 | 10000 | 4000 |
| 34.8 | 293 | 2.2 | 27.29 | S082 | 100LR6 | 18000 | 6656 |
| 34.4 | 297 | 1.2 | 27.66 | S062 | 100LR6 | 10000 | 4000 |
| 34.1 | 299 | 2.2 | 27.29 | S082 | 90L6 | 18000 | 6699 |
| 33.6 | 303 | 1.1 | 27.66 | S062 | 90L6 | 10000 | 4000 |
| 33.1 | 307 | 2.1 | 28.67 | S082 | 100LR6 | 18000 | 6756 |
| 32.7 | 308 | 2.8 | 43.05 | S082 | 80D4 | 18000 | 6783 |
| 32.5 | 310 | 2.7 | 43.05 | S082 | 90S4 | 18000 | 6797 |
| 32.4 | 314 | 2.1 | 28.67 | S082 | 90L6 | 18000 | 6800 |
| 32.3 | 312 | 1.6 | 43.64 | S062 | 80D4 | 10000 | 4000 |
| 32.1 | 314 | 1.6 | 43.64 | S062 | 90S4 | 10000 | 4000 |
| 31.7 | 322 | 1.1 | 30.00 | S062 | 100LR6 | 10000 | 4000 |
| 31.0 | 329 | 1.1 | 30.00 | S062 | 90L6 | 10000 | 4000 |
| 30.9 | 308 | Ex | 91.49 | S083 | 80B2 | 18000 | 6917 |
| 30.6 | 330 | 1.5 | 46.10 | S062 | 80D4 | 10000 | 4000 |
| 30.4 | 332 | 1.5 | 46.10 | S062 | 90S4 | 10000 | 4000 |
| 29.9 | 341 | 2.5 | 31.78 | S082 | 100LR6 | 18000 | 6968 |
| 29.3 | 348 | 2.4 | 31.78 | S082 | 90L6 | 18000 | 7012 |
| 28.3 | 336 | Ex | 99.89 | S063 | 80B2 | 10000 | 4000 |
| 28.1 | 359 | 2.4 | 50.25 | S082 | 80D4 | 18000 | 7104 |
| 27.9 | 362 | 2.3 | 50.25 | S082 | 90S4 | 18000 | 7120 |
| 27.2 | 374 | 2.3 | 34.91 | S082 | 100LR6 | 18000 | 7166 |
| 27.2 | 374 | 3.2 | 34.91 | S102 | 100LR6 | 22000 | 8870 |
| 26.6 | 382 | 2.2 | 34.91 | S082 | 90L6 | 18000 | 7200 |
| 26.6 | 382 | 3.1 | 34.91 | S102 | 90L6 | 22000 | 8929 |
| 26.3 | 383 | 1.3 | 53.53 | S062 | 80D4 | 10000 | 4000 |
| 26.2 | 386 | 1.3 | 53.53 | S062 | 90S4 | 10000 | 4000 |
| 26.0 | 392 | 1.3 | 36.57 | S062 | 100LR6 | 10000 | 4000 |
| 26.0 | 388 | 2.2 | 54.27 | S082 | 80D4 | 18000 | 7200 |
| 25.8 | 391 | 2.2 | 54.27 | S082 | 90S4 | 18000 | 7200 |
| 25.6 | 393 | 1.3 | 55.00 | S062 | 80D4 | 10000 | 4000 |
| 25.6 | 394 | 2.8 | 55.14 | S102 | 80D4 | 22000 | 9000 |
| 25.5 | 396 | 1.3 | 55.00 | S062 | 90S4 | 10000 | 4000 |
| 25.4 | 401 | 1.3 | 36.57 | S062 | 90L6 | 10000 | 4000 |
| 25.4 | 397 | 2.8 | 55.14 | S102 | 90S4 | 22000 | 9000 |
| 24.8 | 411 | 3.1 | 38.30 | S102 | 100LR6 | 22000 | 9000 |
| 24.3 | 420 | 3.1 | 38.30 | S102 | 90L6 | 22000 | 9000 |
| 24.2 | 395 | Ex | 117.17 | S083 | 80B2 | 18000 | 7200 |
| 24.1 | 422 | 1.2 | 39.38 | S062 | 100LR6 | 10000 | 4000 |

# 5.1 S MOTORREDUCTORES (50Hz)



## 1.10 kW

| n2 [rpm] | M2 [Nm] | fs | i | Reductor | Motor | Fr2 D [N] | Fr2 C-L [N] |
|---|---|---|---|---|---|---|---|
| 23.7 | 429 | 2.0 | 40.05 | S082 | 100LR6 | 18000 | 7200 |
| 23.7 | 425 | 3.2 | 59.40 | S102 | 80D4 | 22000 | 9000 |
| 23.6 | 431 | 1.2 | 39.38 | S062 | 90L6 | 10000 | 4000 |
| 23.6 | 428 | 3.2 | 59.40 | S102 | 90S4 | 22000 | 9000 |
| 23.2 | 439 | 1.9 | 40.05 | S082 | 90L6 | 18000 | 7200 |
| 22.8 | 443 | 1.9 | 61.98 | S082 | 80D4 | 18000 | 7200 |
| 22.6 | 446 | 1.9 | 61.98 | S082 | 90S4 | 18000 | 7200 |
| 22.1 | 462 | 1.8 | 43.05 | S082 | 100LR6 | 18000 | 7200 |
| 22.0 | 433 | Ex | 128.73 | S083 | 80B2 | 18000 | 7200 |
| 21.8 | 468 | 1.1 | 43.64 | S062 | 100LR6 | 10000 | 4000 |
| 21.6 | 472 | 1.8 | 43.05 | S082 | 90L6 | 18000 | 7200 |
| 21.6 | 472 | 2.4 | 44.00 | S102 | 100LR6 | 22000 | 9000 |
| 21.3 | 478 | 1.1 | 43.64 | S062 | 90L6 | 10000 | 4000 |
| 21.1 | 482 | 2.3 | 44.00 | S102 | 90L6 | 22000 | 9000 |
| 20.9 | 483 | 1.1 | 67.47 | S062 | 80D4 | 10000 | 4000 |
| 20.9 | 473 | 1.8 | 67.52 | S083 | 80D4 | 18000 | 7200 |
| 20.8 | 486 | 1.0 | 67.47 | S062 | 90S4 | 10000 | 4000 |
| 20.8 | 485 | 2.8 | 67.84 | S102 | 80D4 | 22000 | 9000 |
| 20.7 | 476 | 1.8 | 67.52 | S083 | 90S4 | 18000 | 7200 |
| 20.6 | 489 | 2.8 | 67.84 | S102 | 90S4 | 22000 | 9000 |
| 20.2 | 505 | 1.0 | 46.10 | S062 | 90L6 | 10000 | 4000 |
| 20.2 | 505 | 2.7 | 47.13 | S102 | 100LR6 | 22000 | 9000 |
| 19.7 | 516 | 2.6 | 47.13 | S102 | 90L6 | 22000 | 9000 |
| 19.0 | 520 | 1.6 | 74.18 | S083 | 80D4 | 18000 | 7200 |
| 19.0 | 520 | 2.6 | 74.18 | S103 | 80D4 | 22000 | 9000 |
| 18.9 | 539 | 1.6 | 50.25 | S082 | 100LR6 | 18000 | 7200 |
| 18.9 | 523 | 1.6 | 74.18 | S083 | 90S4 | 18000 | 7200 |
| 18.9 | 523 | 2.6 | 74.18 | S103 | 90S4 | 22000 | 9000 |
| 18.5 | 550 | 1.5 | 50.25 | S082 | 90L6 | 18000 | 7200 |
| 17.8 | 535 | Ex | 158.76 | S083 | 80B2 | 18000 | 7200 |
| 17.5 | 582 | 1.5 | 54.27 | S082 | 100LR6 | 18000 | 7200 |
| 17.3 | 570 | 2.4 | 81.39 | S103 | 80D4 | 22000 | 9000 |
| 17.2 | 591 | 1.9 | 55.14 | S102 | 100LR6 | 22000 | 9000 |
| 17.2 | 574 | 2.4 | 81.39 | S103 | 90S4 | 22000 | 9000 |
| 17.1 | 594 | 1.4 | 54.27 | S082 | 90L6 | 18000 | 7200 |
| 16.9 | 604 | 1.8 | 55.14 | S102 | 90L6 | 22000 | 9000 |
| 16.0 | 637 | 2.1 | 59.40 | S102 | 100LR6 | 22000 | 9000 |
| 15.7 | 651 | 2.1 | 59.40 | S102 | 90L6 | 22000 | 9000 |
| 15.4 | 641 | 1.3 | 91.49 | S083 | 80D4 | 18000 | 7200 |
| 15.3 | 664 | 1.3 | 61.98 | S082 | 100LR6 | 18000 | 7200 |
| 15.3 | 645 | 1.3 | 91.49 | S083 | 90S4 | 18000 | 7200 |
| 15.3 | 623 | Ex | 184.88 | S083 | 80B2 | 18000 | 7200 |
| 15.0 | 679 | 1.3 | 61.98 | S082 | 90L6 | 18000 | 7200 |
| 14.1 | 709 | 1.2 | 67.52 | S083 | 100LR6 | 18000 | 7200 |
| 14.1 | 701 | 1.9 | 100.15 | S103 | 80D4 | 22000 | 9000 |

# 5.1 S MOTORREDUCTORES (50Hz)



## 1.10 kW

| n2 [rpm] | M2 [Nm] | fs | i | Reductor | Motor | Fr2 D [N] | Fr2 C-L [N] |
|---|---|---|---|---|---|---|---|
| 14.0 | 727 | 1.9 | 67.84 | S102 | 100LR6 | 22000 | 9000 |
| 14.0 | 706 | 1.9 | 100.15 | S103 | 90S4 | 22000 | 9000 |
| 13.8 | 724 | 1.2 | 67.52 | S083 | 90L6 | 18000 | 7200 |
| 13.7 | 743 | 1.8 | 67.84 | S102 | 90L6 | 22000 | 9000 |
| 13.4 | 746 | 3.1 | 71.07 | S123 | 100LR6 | 30000 | 11200 |
| 12.8 | 779 | 1.1 | 74.18 | S083 | 100LR6 | 18000 | 7200 |
| 12.8 | 774 | 1.8 | 110.55 | S103 | 80D4 | 22000 | 9000 |
| 12.8 | 779 | 1.8 | 74.18 | S103 | 100LR6 | 22000 | 9000 |
| 12.7 | 780 | 1.8 | 110.55 | S103 | 90S4 | 22000 | 9000 |
| 12.5 | 796 | 1.1 | 74.18 | S083 | 90L6 | 18000 | 7200 |
| 12.5 | 796 | 1.7 | 74.18 | S103 | 90L6 | 22000 | 9000 |
| 12.5 | 788 | 3.2 | 112.52 | S123 | 80D4 | 30000 | 11200 |
| 12.4 | 794 | 3.2 | 112.52 | S123 | 90S4 | 30000 | 11200 |
| 12.0 | 821 | 1.0 | 117.17 | S083 | 80D4 | 18000 | 7200 |
| 11.9 | 826 | 1.0 | 117.17 | S083 | 90S4 | 18000 | 7200 |
| 11.7 | 855 | 1.6 | 81.39 | S103 | 100LR6 | 22000 | 9000 |
| 11.4 | 873 | 1.6 | 81.39 | S103 | 90L6 | 22000 | 9000 |
| 11.4 | 864 | 3.0 | 123.33 | S123 | 80D4 | 30000 | 11200 |
| 11.4 | 870 | 2.9 | 123.33 | S123 | 90S4 | 30000 | 11200 |
| 11.0 | 902 | 1.5 | 128.73 | S103 | 80D4 | 22000 | 9000 |
| 10.9 | 908 | 1.5 | 128.73 | S103 | 90S4 | 22000 | 9000 |
| 10.9 | 916 | 2.8 | 87.27 | S123 | 100LR6 | 30000 | 11200 |
| 10.5 | 937 | 2.7 | 133.78 | S123 | 80D4 | 30000 | 11200 |
| 10.5 | 944 | 2.7 | 133.78 | S123 | 90S4 | 30000 | 11200 |
| 10.0 | 989 | 1.4 | 141.24 | S103 | 80D4 | 22000 | 9000 |
| 9.9 | 996 | 1.4 | 141.24 | S103 | 90S4 | 22000 | 9000 |
| 9.5 | 1051 | 1.3 | 100.15 | S103 | 100LR6 | 22000 | 9000 |
| 9.3 | 1074 | 1.3 | 100.15 | S103 | 90L6 | 22000 | 9000 |
| 9.3 | 1061 | 2.4 | 151.43 | S123 | 80D4 | 30000 | 11200 |
| 9.2 | 1068 | 2.4 | 151.43 | S123 | 90S4 | 30000 | 11200 |
| 8.6 | 1161 | 1.2 | 110.55 | S103 | 100LR6 | 22000 | 9000 |
| 8.4 | 1186 | 1.2 | 110.55 | S103 | 90L6 | 22000 | 9000 |
| 8.4 | 1181 | 2.2 | 112.52 | S123 | 100LR6 | 30000 | 11200 |
| 8.3 | 1207 | 2.1 | 112.52 | S123 | 90L6 | 30000 | 11200 |
| 8.1 | 1217 | 1.1 | 173.78 | S103 | 80D4 | 22000 | 9000 |
| 8.1 | 1226 | 1.1 | 173.78 | S103 | 90S4 | 22000 | 9000 |
| 7.9 | 1243 | 2.1 | 177.53 | S123 | 80D4 | 30000 | 11200 |
| 7.9 | 1252 | 2.0 | 177.53 | S123 | 90S4 | 30000 | 11200 |
| 7.7 | 1295 | 2.0 | 123.33 | S123 | 100LR6 | 30000 | 11200 |
| 7.5 | 1323 | 1.9 | 123.33 | S123 | 90L6 | 30000 | 11200 |
| 7.4 | 1351 | 1.0 | 128.73 | S103 | 100LR6 | 22000 | 9000 |
| 7.2 | 1363 | 1.9 | 194.59 | S123 | 80D4 | 30000 | 11200 |
| 7.2 | 1372 | 1.9 | 194.59 | S123 | 90S4 | 30000 | 11200 |
| 7.1 | 1404 | 1.8 | 133.78 | S123 | 100LR6 | 30000 | 11200 |
| 7.0 | 1435 | 1.8 | 133.78 | S123 | 90L6 | 30000 | 11200 |

# 5.1 S MOTORREDUCTORES (50Hz)



## 1.10 kW

| n2 [rpm] | M2 [Nm] | fs | i | Reductor | Motor | Fr2 D [N] | Fr2 C-L [N] |
|---|---|---|---|---|---|---|---|
| 6.3 | 1590 | 1.6 | 151.43 | S123 | 100LR6 | 30000 | 11200 |
| 6.1 | 1624 | 1.6 | 151.43 | S123 | 90L6 | 30000 | 11200 |
| 5.9 | 1673 | 1.5 | 238.93 | S123 | 80D4 | 30000 | 11200 |
| 5.9 | 1685 | 1.5 | 238.93 | S123 | 90S4 | 30000 | 11200 |
| 5.4 | 1864 | 1.4 | 177.53 | S123 | 100LR6 | 30000 | 11200 |
| 5.2 | 1904 | 1.3 | 177.53 | S123 | 90L6 | 30000 | 11200 |
| 5.0 | 1962 | 1.3 | 280.10 | S123 | 80D4 | 30000 | 11200 |
| 5.0 | 1976 | 1.3 | 280.10 | S123 | 90S4 | 30000 | 11200 |
| 4.9 | 2043 | 1.3 | 194.59 | S123 | 100LR6 | 30000 | 11200 |
| 4.8 | 2087 | 1.2 | 194.59 | S123 | 90L6 | 30000 | 11200 |
| 4.7 | 2109 | 1.2 | 301.16 | S123 | 80D4 | 30000 | 11200 |
| 4.6 | 2124 | 1.2 | 301.16 | S123 | 90S4 | 30000 | 11200 |
| 4.1 | 2409 | 1.1 | 343.93 | S123 | 80D4 | 30000 | 11200 |
| 4.1 | 2426 | 1.1 | 343.93 | S123 | 90S4 | 30000 | 11200 |
| 4.0 | 2508 | 1.0 | 238.93 | S123 | 100LR6 | 30000 | 11200 |
| 3.9 | 2562 | 1.0 | 238.93 | S123 | 90L6 | 30000 | 11200 |

## 1.50 kW

| n2 [rpm] | M2 [Nm] | fs | i | Reductor | Motor | Fr2 D [N] | Fr2 C-L [N] |
|---|---|---|---|---|---|---|---|
| 332.8 | 40 | Ex | 8.63 | S052 | 90S2 | 3211 | 3211 |
| 325.8 | 41 | Ex | 8.63 | S052 | 80C2 | 3230 | 3230 |
| 257.6 | 52 | Ex | 11.14 | S052 | 90S2 | 3447 | 3447 |
| 252.2 | 53 | Ex | 11.14 | S052 | 80C2 | 3467 | 3467 |
| 208.0 | 64 | Ex | 13.66 | S052 | 90S2 | 3650 | 3650 |
| 205.8 | 64 | Ex | 13.66 | S052 | 80C2 | 3660 | 3660 |
| 187.9 | 71 | Ex | 15.27 | S052 | 90S2 | 3747 | 3747 |
| 184.0 | 72 | Ex | 15.27 | S052 | 80C2 | 3767 | 3767 |
| 175.6 | 76 | Ex | 16.29 | S052 | 90S2 | 3812 | 3812 |
| 172.5 | 77 | Ex | 16.29 | S052 | 80C2 | 3829 | 3829 |
| 164.6 | 84 | 1.5 | 8.63 | S052 | 90L4 | 3857 | 3857 |
| 162.3 | 85 | 1.5 | 8.63 | S052 | 90LA4 | 3871 | 3871 |
| 152.4 | 87 | Ex | 18.63 | S052 | 90S2 | 3949 | 3949 |
| 150.8 | 88 | Ex | 18.63 | S052 | 80C2 | 3959 | 3959 |
| 148.8 | 92 | 2.8 | 9.55 | S062 | 90L4 | 7134 | 2854 |
| 146.7 | 94 | 2.8 | 9.55 | S062 | 90LA4 | 7162 | 2865 |
| 146.3 | 91 | Ex | 19.55 | S062 | 90S2 | 7188 | 2875 |
| 143.7 | 92 | Ex | 19.55 | S062 | 80C2 | 7223 | 2889 |
| 136.0 | 98 | Ex | 21.04 | S052 | 90S2 | 4059 | 4059 |
| 133.6 | 99 | Ex | 21.04 | S052 | 80C2 | 4076 | 4076 |
| 127.5 | 108 | 1.3 | 11.14 | S052 | 90L4 | 4099 | 4099 |
| 125.7 | 109 | 1.3 | 11.14 | S052 | 90LA4 | 4112 | 4112 |
| 123.4 | 108 | Ex | 23.18 | S062 | 90S2 | 7530 | 3012 |
| 121.3 | 113 | 2.5 | 11.71 | S062 | 90L4 | 7540 | 3016 |

# 5.1 S MOTORREDUCTORES (50Hz)



## 1.50 kW

| n2 [rpm] | M2 [Nm] | fs | i | Reductor | Motor | Fr2 D [N] | Fr2 C-L [N] |
|---|---|---|---|---|---|---|---|
| 121.2 | 109 | Ex | 23.18 | S062 | 80C2 | 7566 | 3026 |
| 119.6 | 115 | 2.5 | 11.71 | S062 | 90LA4 | 7568 | 3027 |
| 118.8 | 112 | Ex | 24.07 | S052 | 90S2 | 4187 | 4187 |
| 117.5 | 118 | 2.0 | 8.00 | S062 | 100L6 | 7596 | 3038 |
| 116.8 | 114 | Ex | 24.07 | S052 | 80C2 | 4204 | 4204 |
| 116.3 | 119 | 2.0 | 8.00 | S062 | 100LA6 | 7617 | 3047 |
| 113.8 | 117 | Ex | 25.14 | S062 | 90S2 | 7695 | 3078 |
| 111.8 | 119 | Ex | 25.14 | S062 | 80C2 | 7732 | 3093 |
| 110.9 | 120 | Ex | 25.79 | S052 | 90S2 | 4252 | 4252 |
| 109.0 | 122 | Ex | 25.79 | S052 | 80C2 | 4269 | 4269 |
| 106.3 | 129 | 2.3 | 13.36 | S062 | 90L4 | 7805 | 3122 |
| 104.8 | 131 | 2.3 | 13.36 | S062 | 90LA4 | 7834 | 3134 |
| 104.0 | 132 | 1.1 | 13.66 | S052 | 90L4 | 4285 | 4285 |
| 102.7 | 129 | Ex | 27.66 | S062 | 90S2 | 7905 | 3162 |
| 102.5 | 134 | 1.1 | 13.66 | S052 | 90LA4 | 4298 | 4298 |
| 102.1 | 130 | Ex | 27.81 | S052 | 90S2 | 4329 | 4329 |
| 101.6 | 131 | Ex | 27.66 | S062 | 80C2 | 7927 | 3171 |
| 101.0 | 131 | Ex | 27.81 | S052 | 80C2 | 4339 | 4339 |
| 98.5 | 141 | 1.8 | 9.55 | S062 | 100L6 | 7952 | 3181 |
| 97.4 | 143 | 1.8 | 9.55 | S062 | 100LA6 | 7974 | 3189 |
| 94.7 | 140 | Ex | 30.00 | S052 | 90S2 | 4398 | 4398 |
| 94.7 | 140 | Ex | 30.00 | S062 | 90S2 | 8073 | 3229 |
| 93.7 | 142 | Ex | 30.00 | S052 | 80C2 | 4408 | 4408 |
| 93.7 | 142 | Ex | 30.00 | S062 | 80C2 | 8095 | 3238 |
| 93.0 | 148 | 1.2 | 15.27 | S052 | 90L4 | 4384 | 4384 |
| 91.7 | 150 | 1.2 | 15.27 | S052 | 90LA4 | 4397 | 4397 |
| 89.1 | 154 | 2.1 | 15.94 | S062 | 90L4 | 8165 | 3266 |
| 87.8 | 157 | 2.1 | 15.94 | S062 | 90LA4 | 8194 | 3277 |
| 87.3 | 152 | Ex | 32.55 | S052 | 90S2 | 4471 | 4471 |
| 87.2 | 158 | 1.1 | 16.29 | S052 | 90L4 | 4440 | 4440 |
| 86.3 | 154 | Ex | 32.55 | S052 | 80C2 | 4481 | 4481 |
| 86.0 | 160 | 1.1 | 16.29 | S052 | 90LA4 | 4452 | 4452 |
| 80.3 | 173 | 1.6 | 11.71 | S062 | 100L6 | 8366 | 3347 |
| 79.4 | 175 | 1.6 | 11.71 | S062 | 100LA6 | 8388 | 3355 |
| 77.7 | 171 | Ex | 36.55 | S052 | 90S2 | 4571 | 4571 |
| 77.7 | 171 | Ex | 36.57 | S062 | 90S2 | 8484 | 3394 |
| 76.9 | 173 | Ex | 36.55 | S052 | 80C2 | 4580 | 4580 |
| 76.8 | 173 | Ex | 36.57 | S062 | 80C2 | 8506 | 3402 |
| 72.6 | 189 | 1.8 | 19.55 | S062 | 90L4 | 8581 | 3432 |
| 72.1 | 184 | Ex | 39.38 | S062 | 90S2 | 8637 | 3455 |
| 71.6 | 192 | 1.7 | 19.55 | S062 | 90LA4 | 8609 | 3444 |
| 71.4 | 186 | Ex | 39.38 | S062 | 80C2 | 8659 | 3464 |
| 71.2 | 186 | Ex | 39.90 | S052 | 90S2 | 4644 | 4644 |
| 70.5 | 195 | 2.8 | 20.14 | S082 | 90L4 | 18000 | 5308 |
| 70.4 | 188 | Ex | 39.90 | S052 | 80C2 | 4652 | 4652 |

# 5.1 S MOTORREDUCTORES (50Hz)



## 1.50 kW

| n2 [rpm] | M2 [Nm] | fs | i | Reductor | Motor | Fr2 D [N] | Fr2 C-L [N] |
|---|---|---|---|---|---|---|---|
| 70.4 | 197 | 1.5 | 13.36 | S062 | 100L6 | 8632 | 3453 |
| 70.2 | 189 | Ex | 40.05 | S082 | 80C2 | 18000 | 5322 |
| 69.6 | 199 | 1.5 | 13.36 | S062 | 100LA6 | 8654 | 3461 |
| 69.5 | 198 | 2.8 | 20.14 | S082 | 90LA4 | 18000 | 5331 |
| 66.6 | 199 | Ex | 42.63 | S052 | 90S2 | 4696 | 4696 |
| 66.0 | 201 | Ex | 43.05 | S082 | 90S2 | 18000 | 5424 |
| 65.9 | 201 | Ex | 42.63 | S052 | 80C2 | 4704 | 4704 |
| 65.3 | 203 | Ex | 43.05 | S082 | 80C2 | 18000 | 5442 |
| 65.1 | 204 | Ex | 43.64 | S062 | 90S2 | 8849 | 3540 |
| 64.4 | 206 | Ex | 43.64 | S062 | 80C2 | 8871 | 3548 |
| 64.2 | 214 | 2.7 | 22.13 | S082 | 90L4 | 18000 | 5463 |
| 63.3 | 217 | 2.6 | 22.13 | S082 | 90LA4 | 18000 | 5486 |
| 61.6 | 215 | Ex | 46.10 | S062 | 90S2 | 8961 | 3585 |
| 61.3 | 224 | 1.5 | 23.18 | S062 | 90L4 | 8923 | 3569 |
| 61.0 | 218 | Ex | 46.10 | S062 | 80C2 | 8983 | 3593 |
| 60.4 | 228 | 1.5 | 23.18 | S062 | 90LA4 | 8951 | 3581 |
| 60.2 | 221 | Ex | 47.20 | S052 | 90S2 | 4772 | 4772 |
| 59.5 | 223 | Ex | 47.20 | S052 | 80C2 | 4780 | 4780 |
| 59.2 | 232 | 2.5 | 24.00 | S082 | 90L4 | 18000 | 5600 |
| 59.0 | 235 | 1.4 | 15.94 | S062 | 100L6 | 8984 | 3594 |
| 58.4 | 238 | 1.4 | 15.94 | S062 | 100LA6 | 9005 | 3602 |
| 58.3 | 236 | 2.4 | 24.00 | S082 | 90LA4 | 18000 | 5624 |
| 56.5 | 243 | 1.4 | 25.14 | S062 | 90L4 | 9084 | 3634 |
| 56.5 | 235 | Ex | 50.25 | S082 | 90S2 | 18000 | 5686 |
| 55.9 | 237 | Ex | 50.25 | S082 | 80C2 | 18000 | 5704 |
| 55.7 | 247 | 1.4 | 25.14 | S062 | 90LA4 | 9112 | 3645 |
| 54.4 | 256 | 2.2 | 17.29 | S082 | 100L6 | 18000 | 5743 |
| 53.8 | 258 | 2.1 | 17.29 | S082 | 100LA6 | 18000 | 5762 |
| 53.1 | 250 | Ex | 53.53 | S062 | 90S2 | 9263 | 3705 |
| 52.5 | 253 | Ex | 53.53 | S062 | 80C2 | 9285 | 3714 |
| 52.3 | 254 | Ex | 54.27 | S082 | 90S2 | 18000 | 5820 |
| 52.0 | 264 | 2.5 | 27.29 | S082 | 90L4 | 18000 | 5822 |
| 51.8 | 256 | Ex | 54.27 | S082 | 80C2 | 18000 | 5839 |
| 51.6 | 257 | Ex | 55.00 | S062 | 90S2 | 9317 | 3727 |
| 51.3 | 268 | 1.3 | 27.66 | S062 | 90L4 | 9269 | 3708 |
| 51.3 | 268 | 2.4 | 27.29 | S082 | 90LA4 | 18000 | 5846 |
| 51.1 | 260 | Ex | 55.00 | S062 | 80C2 | 9338 | 3735 |
| 50.6 | 272 | 1.3 | 27.66 | S062 | 90LA4 | 9296 | 3719 |
| 49.5 | 278 | 2.3 | 28.67 | S082 | 90L4 | 18000 | 5909 |
| 48.8 | 282 | 2.3 | 28.67 | S082 | 90LA4 | 18000 | 5934 |
| 48.1 | 289 | 1.1 | 19.55 | S062 | 100L6 | 9376 | 3750 |
| 47.6 | 292 | 1.1 | 19.55 | S062 | 100LA6 | 9396 | 3758 |
| 47.3 | 291 | 1.2 | 30.00 | S062 | 90L4 | 9424 | 3769 |
| 46.7 | 295 | 1.2 | 30.00 | S062 | 90LA4 | 9450 | 3780 |
| 46.7 | 298 | 1.9 | 20.14 | S082 | 100L6 | 18000 | 6012 |

# 5.1 S MOTORREDUCTORES (50Hz)



## 1.50 kW

| n2 [rpm] | M2 [Nm] | fs | i | Reductor | Motor | Fr2 D [N] | Fr2 C-L [N] |
|---|---|---|---|---|---|---|---|
| 46.2 | 301 | 1.8 | 20.14 | S082 | 100LA6 | 18000 | 6031 |
| 45.8 | 290 | Ex | 61.98 | S082 | 90S2 | 18000 | 6058 |
| 45.3 | 293 | Ex | 61.98 | S082 | 80C2 | 18000 | 6077 |
| 44.7 | 308 | 2.8 | 31.78 | S082 | 90L4 | 18000 | 6094 |
| 44.1 | 312 | 2.7 | 31.78 | S082 | 90LA4 | 18000 | 6119 |
| 42.5 | 327 | 1.8 | 22.13 | S082 | 100L6 | 18000 | 6183 |
| 42.1 | 315 | Ex | 67.47 | S062 | 90S2 | 9712 | 3885 |
| 42.1 | 309 | Ex | 67.52 | S083 | 90S2 | 18000 | 6221 |
| 42.0 | 330 | 1.7 | 22.13 | S082 | 100LA6 | 18000 | 6202 |
| 41.7 | 319 | Ex | 67.47 | S062 | 80C2 | 9731 | 3893 |
| 41.6 | 312 | Ex | 67.52 | S083 | 80C2 | 18000 | 6241 |
| 40.7 | 338 | 2.5 | 34.91 | S082 | 90L4 | 18000 | 6266 |
| 40.1 | 343 | 2.5 | 34.91 | S082 | 90LA4 | 18000 | 6293 |
| 39.2 | 355 | 1.6 | 24.00 | S082 | 100L6 | 18000 | 6333 |
| 38.8 | 354 | 1.4 | 36.57 | S062 | 90L4 | 9781 | 3913 |
| 38.8 | 358 | 1.6 | 24.00 | S082 | 100LA6 | 18000 | 6353 |
| 38.3 | 359 | 1.4 | 36.57 | S062 | 90LA4 | 9806 | 3922 |
| 38.3 | 339 | Ex | 74.18 | S083 | 90S2 | 18000 | 6398 |
| 37.9 | 343 | Ex | 74.18 | S083 | 80C2 | 18000 | 6418 |
| 36.6 | 376 | 3.4 | 38.30 | S102 | 90LA4 | 22000 | 8020 |
| 36.1 | 381 | 1.3 | 39.38 | S062 | 90L4 | 9906 | 3962 |
| 35.6 | 387 | 1.3 | 39.38 | S062 | 90LA4 | 9929 | 3972 |
| 35.5 | 388 | 2.2 | 40.05 | S082 | 90L4 | 18000 | 6525 |
| 35.0 | 393 | 2.2 | 40.05 | S082 | 90LA4 | 18000 | 6552 |
| 34.9 | 373 | Ex | 81.43 | S063 | 90S2 | 10000 | 4000 |
| 34.5 | 377 | Ex | 81.43 | S063 | 80C2 | 10000 | 4000 |
| 34.4 | 403 | 1.6 | 27.29 | S082 | 100L6 | 18000 | 6576 |
| 34.1 | 408 | 1.6 | 27.29 | S082 | 100LA6 | 18000 | 6597 |
| 33.0 | 417 | 2.0 | 43.05 | S082 | 90L4 | 18000 | 6664 |
| 32.8 | 424 | 1.5 | 28.67 | S082 | 100L6 | 18000 | 6672 |
| 32.5 | 423 | 1.2 | 43.64 | S062 | 90L4 | 10000 | 4000 |
| 32.5 | 423 | 2.0 | 43.05 | S082 | 90LA4 | 18000 | 6691 |
| 32.4 | 428 | 1.5 | 28.67 | S082 | 100LA6 | 18000 | 6692 |
| 32.3 | 426 | 2.6 | 44.00 | S102 | 90L4 | 22000 | 8332 |
| 32.1 | 429 | 1.2 | 43.64 | S062 | 90LA4 | 10000 | 4000 |
| 31.8 | 432 | 2.6 | 44.00 | S102 | 90LA4 | 22000 | 8368 |
| 31.5 | 441 | 2.4 | 29.87 | S102 | 100L6 | 22000 | 8392 |
| 31.1 | 446 | 2.4 | 29.87 | S102 | 100LA6 | 22000 | 8420 |
| 31.0 | 419 | Ex | 91.49 | S083 | 90S2 | 18000 | 6805 |
| 30.8 | 446 | 1.1 | 46.10 | S062 | 90L4 | 10000 | 4000 |
| 30.7 | 423 | Ex | 91.49 | S083 | 80C2 | 18000 | 6826 |
| 30.4 | 453 | 1.1 | 46.10 | S062 | 90LA4 | 10000 | 4000 |
| 30.1 | 456 | 3.0 | 47.13 | S102 | 90L4 | 22000 | 8507 |
| 29.7 | 463 | 2.9 | 47.13 | S102 | 90LA4 | 22000 | 8544 |
| 29.6 | 470 | 1.8 | 31.78 | S082 | 100L6 | 18000 | 6872 |

# 5.1 S MOTORREDUCTORES (50Hz)



## 1.50 kW

| n2 [rpm] | M2 [Nm] | fs | i | Reductor | Motor | Fr2 D [N] | Fr2 C-L [N] |
|---|---|---|---|---|---|---|---|
| 29.3 | 475 | 1.8 | 31.78 | S082 | 100LA6 | 18000 | 6894 |
| 29.0 | 479 | 2.7 | 32.40 | S102 | 100L6 | 22000 | 8602 |
| 28.7 | 484 | 2.6 | 32.40 | S102 | 100LA6 | 22000 | 8630 |
| 28.3 | 487 | 1.7 | 50.25 | S082 | 90L4 | 18000 | 6968 |
| 27.9 | 494 | 1.7 | 50.25 | S082 | 90LA4 | 18000 | 6996 |
| 26.9 | 516 | 1.6 | 34.91 | S082 | 100L6 | 18000 | 7060 |
| 26.9 | 516 | 2.3 | 34.91 | S102 | 100L6 | 22000 | 8798 |
| 26.6 | 521 | 1.6 | 34.91 | S082 | 100LA6 | 18000 | 7081 |
| 26.6 | 521 | 2.3 | 34.91 | S102 | 100LA6 | 22000 | 8826 |
| 26.2 | 526 | 1.6 | 54.27 | S082 | 90L4 | 18000 | 7122 |
| 25.8 | 533 | 1.6 | 54.27 | S082 | 90LA4 | 18000 | 7151 |
| 25.8 | 534 | 2.1 | 55.14 | S102 | 90L4 | 22000 | 8920 |
| 25.4 | 542 | 2.0 | 55.14 | S102 | 90LA4 | 22000 | 8958 |
| 24.5 | 566 | 2.3 | 38.30 | S102 | 100L6 | 22000 | 9000 |
| 24.3 | 572 | 2.2 | 38.30 | S102 | 100LA6 | 22000 | 9000 |
| 24.2 | 536 | Ex | 117.17 | S083 | 90S2 | 18000 | 7200 |
| 24.0 | 542 | Ex | 117.17 | S083 | 80C2 | 18000 | 7200 |
| 23.9 | 575 | 2.4 | 59.40 | S102 | 90L4 | 22000 | 9000 |
| 23.6 | 583 | 2.3 | 59.40 | S102 | 90LA4 | 22000 | 9000 |
| 23.5 | 592 | 1.4 | 40.05 | S082 | 100L6 | 18000 | 7200 |
| 23.2 | 598 | 1.4 | 40.05 | S082 | 100LA6 | 18000 | 7200 |
| 22.9 | 600 | 1.4 | 61.98 | S082 | 90L4 | 18000 | 7200 |
| 22.6 | 609 | 1.4 | 61.98 | S082 | 90LA4 | 18000 | 7200 |
| 22.1 | 589 | Ex | 128.73 | S083 | 90S2 | 18000 | 7200 |
| 21.8 | 636 | 1.3 | 43.05 | S082 | 100L6 | 18000 | 7200 |
| 21.8 | 595 | Ex | 128.73 | S083 | 80C2 | 18000 | 7200 |
| 21.6 | 643 | 1.3 | 43.05 | S082 | 100LA6 | 18000 | 7200 |
| 21.4 | 650 | 1.7 | 44.00 | S102 | 100L6 | 22000 | 9000 |
| 21.1 | 657 | 1.7 | 44.00 | S102 | 100LA6 | 22000 | 9000 |
| 21.0 | 640 | 1.3 | 67.52 | S083 | 90L4 | 18000 | 7200 |
| 20.9 | 657 | 2.1 | 67.84 | S102 | 90L4 | 22000 | 9000 |
| 20.7 | 649 | 1.3 | 67.52 | S083 | 90LA4 | 18000 | 7200 |
| 20.6 | 666 | 2.0 | 67.84 | S102 | 90LA4 | 22000 | 9000 |
| 19.9 | 696 | 2.0 | 47.13 | S102 | 100L6 | 22000 | 9000 |
| 19.7 | 704 | 1.9 | 47.13 | S102 | 100LA6 | 22000 | 9000 |
| 19.2 | 725 | 2.8 | 49.04 | S122 | 100L6 | 30000 | 11200 |
| 19.1 | 703 | 1.2 | 74.18 | S083 | 90L4 | 18000 | 7200 |
| 19.1 | 703 | 1.9 | 74.18 | S103 | 90L4 | 22000 | 9000 |
| 19.0 | 732 | 2.8 | 49.04 | S122 | 100LA6 | 30000 | 11200 |
| 18.9 | 713 | 1.2 | 74.18 | S083 | 90LA4 | 18000 | 7200 |
| 18.9 | 713 | 1.9 | 74.18 | S103 | 90LA4 | 22000 | 9000 |
| 18.7 | 742 | 1.1 | 50.25 | S082 | 100L6 | 18000 | 7200 |
| 18.5 | 750 | 1.1 | 50.25 | S082 | 100LA6 | 18000 | 7200 |
| 17.5 | 794 | 2.8 | 53.75 | S122 | 100L6 | 30000 | 11200 |
| 17.4 | 772 | 1.8 | 81.39 | S103 | 90L4 | 22000 | 9000 |

# 5.1 S MOTORREDUCTORES (50Hz)



## 1.50 kW

| n2 [rpm] | M2 [Nm] | fs | i | Reductor | Motor | Fr2 D [N] | Fr2 C-L [N] |
|---|---|---|---|---|---|---|---|
| 17.3 | 802 | 1.1 | 54.27 | S082 | 100L6 | 18000 | 7200 |
| 17.3 | 803 | 2.8 | 53.75 | S122 | 100LA6 | 30000 | 11200 |
| 17.2 | 783 | 1.7 | 81.39 | S103 | 90LA4 | 22000 | 9000 |
| 17.1 | 810 | 1.0 | 54.27 | S082 | 100LA6 | 18000 | 7200 |
| 17.0 | 815 | 1.4 | 55.14 | S102 | 100L6 | 22000 | 9000 |
| 16.9 | 823 | 1.3 | 55.14 | S102 | 100LA6 | 22000 | 9000 |
| 15.8 | 878 | 1.6 | 59.40 | S102 | 100L6 | 22000 | 9000 |
| 15.7 | 887 | 1.5 | 59.40 | S102 | 100LA6 | 22000 | 9000 |
| 14.2 | 950 | 1.4 | 100.15 | S103 | 90L4 | 22000 | 9000 |
| 14.2 | 975 | 2.6 | 66.00 | S122 | 100L6 | 30000 | 11200 |
| 14.1 | 986 | 2.6 | 66.00 | S122 | 100LA6 | 30000 | 11200 |
| 14.0 | 963 | 1.4 | 100.15 | S103 | 90LA4 | 22000 | 9000 |
| 13.9 | 1002 | 1.4 | 67.84 | S102 | 100L6 | 22000 | 9000 |
| 13.7 | 1013 | 1.3 | 67.84 | S102 | 100LA6 | 22000 | 9000 |
| 13.2 | 1028 | 2.2 | 71.07 | S123 | 100L6 | 30000 | 11200 |
| 13.1 | 1039 | 2.2 | 71.07 | S123 | 100LA6 | 30000 | 11200 |
| 12.8 | 1048 | 1.3 | 110.55 | S103 | 90L4 | 22000 | 9000 |
| 12.7 | 1063 | 1.3 | 110.55 | S103 | 90LA4 | 22000 | 9000 |
| 12.7 | 1073 | 1.3 | 74.18 | S103 | 100L6 | 22000 | 9000 |
| 12.6 | 1067 | 2.4 | 112.52 | S123 | 90L4 | 30000 | 11200 |
| 12.5 | 1085 | 1.3 | 74.18 | S103 | 100LA6 | 22000 | 9000 |
| 12.4 | 1082 | 2.4 | 112.52 | S123 | 90LA4 | 30000 | 11200 |
| 11.5 | 1178 | 1.2 | 81.39 | S103 | 100L6 | 22000 | 9000 |
| 11.5 | 1169 | 2.2 | 123.33 | S123 | 90L4 | 30000 | 11200 |
| 11.4 | 1190 | 1.1 | 81.39 | S103 | 100LA6 | 22000 | 9000 |
| 11.4 | 1186 | 2.2 | 123.33 | S123 | 90LA4 | 30000 | 11200 |
| 11.0 | 1221 | 1.1 | 128.73 | S103 | 90L4 | 22000 | 9000 |
| 10.9 | 1238 | 1.1 | 128.73 | S103 | 90LA4 | 22000 | 9000 |
| 10.8 | 1263 | 2.0 | 87.27 | S123 | 100L6 | 30000 | 11200 |
| 10.7 | 1276 | 2.0 | 87.27 | S123 | 100LA6 | 30000 | 11200 |
| 10.6 | 1269 | 2.0 | 133.78 | S123 | 90L4 | 30000 | 11200 |
| 10.5 | 1287 | 2.0 | 133.78 | S123 | 90LA4 | 30000 | 11200 |
| 10.1 | 1339 | 1.0 | 141.24 | S103 | 90L4 | 22000 | 9000 |
| 9.9 | 1358 | 1.0 | 141.24 | S103 | 90LA4 | 22000 | 9000 |
| 9.4 | 1436 | 1.8 | 151.43 | S123 | 90L4 | 30000 | 11200 |
| 9.2 | 1457 | 1.8 | 151.43 | S123 | 90LA4 | 30000 | 11200 |
| 8.4 | 1628 | 1.6 | 112.52 | S123 | 100L6 | 30000 | 11200 |
| 8.3 | 1645 | 1.6 | 112.52 | S123 | 100LA6 | 30000 | 11200 |
| 8.0 | 1683 | 1.5 | 177.53 | S123 | 90L4 | 30000 | 11200 |
| 7.9 | 1708 | 1.5 | 177.53 | S123 | 90LA4 | 30000 | 11200 |
| 7.6 | 1784 | 1.4 | 123.33 | S123 | 100L6 | 30000 | 11200 |
| 7.5 | 1804 | 1.4 | 123.33 | S123 | 100LA6 | 30000 | 11200 |
| 7.3 | 1845 | 1.4 | 194.59 | S123 | 90L4 | 30000 | 11200 |
| 7.2 | 1872 | 1.4 | 194.59 | S123 | 90LA4 | 30000 | 11200 |
| 7.0 | 1936 | 1.3 | 133.78 | S123 | 100L6 | 30000 | 11200 |

# 5.1 S MOTORREDUCTORES (50Hz)



## 1.50 kW

| n2 [rpm] | M2 [Nm] | fs | i | Reductor | Motor | Fr2 D [N] | Fr2 C-L [N] |
|---|---|---|---|---|---|---|---|
| 7.0 | 1956 | 1.3 | 133.78 | S123 | 100LA6 | 30000 | 11200 |
| 6.2 | 2191 | 1.2 | 151.43 | S123 | 100L6 | 30000 | 11200 |
| 6.1 | 2215 | 1.2 | 151.43 | S123 | 100LA6 | 30000 | 11200 |
| 5.9 | 2266 | 1.1 | 238.93 | S123 | 90L4 | 30000 | 11200 |
| 5.9 | 2298 | 1.1 | 238.93 | S123 | 90LA4 | 30000 | 11200 |

## 1.85 kW

| n2 [rpm] | M2 [Nm] | fs | i | Reductor | Motor | Fr2 D [N] | Fr2 C-L [N] |
|---|---|---|---|---|---|---|---|
| 175.0 | 97 | 2.5 | 8.00 | S062 | 90LB4 | 6703 | 2681 |
| 162.3 | 104 | 1.2 | 8.63 | S052 | 90LB4 | 3756 | 3756 |
| 146.7 | 116 | 2.2 | 9.55 | S062 | 90LB4 | 7023 | 2809 |
| 125.7 | 135 | 1.0 | 11.14 | S052 | 90LB4 | 3963 | 3963 |
| 119.6 | 142 | 2.0 | 11.71 | S062 | 90LB4 | 7398 | 2959 |
| 116.3 | 147 | 1.6 | 8.00 | S062 | 100LB6 | 7441 | 2976 |
| 104.8 | 162 | 1.9 | 13.36 | S062 | 90LB4 | 7640 | 3056 |
| 97.4 | 176 | 1.5 | 9.55 | S062 | 100LB6 | 7763 | 3105 |
| 93.5 | 183 | 2.6 | 9.94 | S082 | 100LB6 | 16905 | 4830 |
| 87.8 | 193 | 1.7 | 15.94 | S062 | 90LB4 | 7962 | 3185 |
| 80.9 | 210 | 2.6 | 17.29 | S082 | 90LB4 | 17673 | 5049 |
| 80.1 | 214 | 2.4 | 11.61 | S082 | 100LB6 | 17721 | 5063 |
| 79.4 | 216 | 1.3 | 11.71 | S062 | 100LB6 | 8129 | 3252 |
| 72.9 | 235 | 2.3 | 12.75 | S082 | 100LB6 | 18000 | 5209 |
| 71.6 | 237 | 1.4 | 19.55 | S062 | 90LB4 | 8325 | 3330 |
| 69.6 | 246 | 1.2 | 13.36 | S062 | 100LB6 | 8359 | 3343 |
| 69.5 | 244 | 2.3 | 20.14 | S082 | 90LB4 | 18000 | 5287 |
| 63.3 | 268 | 2.1 | 22.13 | S082 | 90LB4 | 18000 | 5439 |
| 60.4 | 281 | 1.2 | 23.18 | S062 | 90LB4 | 8615 | 3446 |
| 58.4 | 294 | 1.1 | 15.94 | S062 | 100LB6 | 8653 | 3461 |
| 58.3 | 291 | 2.0 | 24.00 | S082 | 90LB4 | 18000 | 5572 |
| 55.7 | 305 | 1.1 | 25.14 | S062 | 90LB4 | 8747 | 3499 |
| 53.8 | 319 | 1.7 | 17.29 | S082 | 100LB6 | 18000 | 5705 |
| 51.3 | 331 | 2.0 | 27.29 | S082 | 90LB4 | 18000 | 5788 |
| 50.6 | 335 | 1.0 | 27.66 | S062 | 90LB4 | 8895 | 3558 |
| 48.8 | 347 | 1.9 | 28.67 | S082 | 90LB4 | 18000 | 5872 |
| 46.2 | 371 | 1.5 | 20.14 | S082 | 100LB6 | 18000 | 5965 |
| 44.1 | 385 | 2.2 | 31.78 | S082 | 90LB4 | 18000 | 6051 |
| 43.2 | 393 | 3.3 | 32.40 | S102 | 90LB4 | 22000 | 7562 |
| 42.0 | 408 | 1.4 | 22.13 | S082 | 100LB6 | 18000 | 6130 |
| 42.0 | 408 | 2.5 | 22.13 | S102 | 100LB6 | 22000 | 7623 |
| 40.1 | 423 | 2.0 | 34.91 | S082 | 90LB4 | 18000 | 6217 |
| 40.1 | 423 | 2.8 | 34.91 | S102 | 90LB4 | 22000 | 7736 |
| 38.8 | 442 | 1.3 | 24.00 | S082 | 100LB6 | 18000 | 6275 |
| 38.3 | 443 | 1.2 | 36.57 | S062 | 90LB4 | 9274 | 3710 |

# 5.1 S MOTORREDUCTORES (50Hz)



## 1.85 kW

| n2 [rpm] | M2 [Nm] | fs | i | Reductor | Motor | Fr2 D [N] | Fr2 C-L [N] |
|---|---|---|---|---|---|---|---|
| 38.3 | 447 | 2.4 | 24.28 | S102 | 100LB6 | 22000 | 7840 |
| 36.6 | 464 | 2.8 | 38.30 | S102 | 90LB4 | 22000 | 7955 |
| 35.6 | 477 | 1.1 | 39.38 | S062 | 90LB4 | 9357 | 3743 |
| 35.3 | 485 | 2.2 | 26.33 | S102 | 100LB6 | 22000 | 8034 |
| 35.0 | 485 | 1.8 | 40.05 | S082 | 90LB4 | 18000 | 6466 |
| 34.1 | 503 | 1.3 | 27.29 | S082 | 100LB6 | 18000 | 6508 |
| 32.5 | 522 | 1.6 | 43.05 | S082 | 90LB4 | 18000 | 6599 |
| 32.4 | 528 | 1.2 | 28.67 | S082 | 100LB6 | 18000 | 6599 |
| 31.8 | 533 | 2.1 | 44.00 | S102 | 90LB4 | 22000 | 8293 |
| 31.1 | 550 | 2.0 | 29.87 | S102 | 100LB6 | 22000 | 8342 |
| 29.7 | 571 | 2.4 | 47.13 | S102 | 90LB4 | 22000 | 8464 |
| 29.3 | 585 | 1.5 | 31.78 | S082 | 100LB6 | 18000 | 6790 |
| 28.7 | 597 | 2.1 | 32.40 | S102 | 100LB6 | 22000 | 8546 |
| 27.9 | 609 | 1.4 | 50.25 | S082 | 90LB4 | 18000 | 6888 |
| 26.6 | 643 | 1.3 | 34.91 | S082 | 100LB6 | 18000 | 6967 |
| 26.6 | 643 | 1.9 | 34.91 | S102 | 100LB6 | 22000 | 8736 |
| 26.0 | 651 | 3.4 | 53.75 | S122 | 90LB4 | 30000 | 11200 |
| 25.8 | 657 | 1.3 | 54.27 | S082 | 90LB4 | 18000 | 7034 |
| 25.4 | 668 | 1.7 | 55.14 | S102 | 90LB4 | 22000 | 8864 |
| 24.3 | 706 | 1.8 | 38.30 | S102 | 100LB6 | 22000 | 8976 |
| 23.6 | 720 | 1.9 | 59.40 | S102 | 90LB4 | 22000 | 9000 |
| 23.2 | 738 | 1.2 | 40.05 | S082 | 100LB6 | 18000 | 7200 |
| 22.6 | 751 | 1.1 | 61.98 | S082 | 90LB4 | 18000 | 7200 |
| 21.6 | 793 | 1.1 | 43.05 | S082 | 100LB6 | 18000 | 7200 |
| 21.3 | 803 | 3.2 | 43.60 | S122 | 100LB6 | 30000 | 11200 |
| 21.2 | 800 | 3.2 | 66.00 | S122 | 90LB4 | 30000 | 11200 |
| 21.1 | 810 | 1.4 | 44.00 | S102 | 100LB6 | 22000 | 9000 |
| 20.7 | 801 | 1.1 | 67.52 | S083 | 90LB4 | 18000 | 7200 |
| 20.6 | 822 | 1.7 | 67.84 | S102 | 90LB4 | 22000 | 9000 |
| 19.7 | 868 | 1.6 | 47.13 | S102 | 100LB6 | 22000 | 9000 |
| 19.0 | 903 | 2.3 | 49.04 | S122 | 100LB6 | 30000 | 11200 |
| 18.9 | 880 | 1.6 | 74.18 | S103 | 90LB4 | 22000 | 9000 |
| 17.3 | 990 | 2.2 | 53.75 | S122 | 100LB6 | 30000 | 11200 |
| 17.2 | 966 | 1.4 | 81.39 | S103 | 90LB4 | 22000 | 9000 |
| 16.9 | 1016 | 1.1 | 55.14 | S102 | 100LB6 | 22000 | 9000 |
| 15.7 | 1094 | 1.2 | 59.40 | S102 | 100LB6 | 22000 | 9000 |
| 14.1 | 1216 | 2.1 | 66.00 | S122 | 100LB6 | 30000 | 11200 |
| 14.0 | 1188 | 1.1 | 100.15 | S103 | 90LB4 | 22000 | 9000 |
| 13.7 | 1250 | 1.1 | 67.84 | S102 | 100LB6 | 22000 | 9000 |
| 13.1 | 1282 | 1.8 | 71.07 | S123 | 100LB6 | 30000 | 11200 |
| 12.7 | 1311 | 1.0 | 110.55 | S103 | 90LB4 | 22000 | 9000 |
| 12.5 | 1338 | 1.0 | 74.18 | S103 | 100LB6 | 22000 | 9000 |
| 12.4 | 1335 | 1.9 | 112.52 | S123 | 90LB4 | 30000 | 11200 |
| 11.4 | 1463 | 1.7 | 123.33 | S123 | 90LB4 | 30000 | 11200 |
| 10.7 | 1574 | 1.6 | 87.27 | S123 | 100LB6 | 30000 | 11200 |

# 5.1 S MOTORREDUCTORES (50Hz)



## 1.85 kW

| n2 [rpm] | M2 [Nm] | fs | i | Reductor | Motor | Fr2 D [N] | Fr2 C-L [N] |
|---|---|---|---|---|---|---|---|
| 10.5 | 1587 | 1.6 | 133.78 | S123 | 90LB4 | 30000 | 11200 |
| 9.2 | 1796 | 1.4 | 151.43 | S123 | 90LB4 | 30000 | 11200 |
| 8.3 | 2029 | 1.3 | 112.52 | S123 | 100LB6 | 30000 | 11200 |
| 7.9 | 2106 | 1.2 | 177.53 | S123 | 90LB4 | 30000 | 11200 |
| 7.5 | 2224 | 1.2 | 123.33 | S123 | 100LB6 | 30000 | 11200 |
| 7.2 | 2308 | 1.1 | 194.59 | S123 | 90LB4 | 30000 | 11200 |
| 7.0 | 2413 | 1.1 | 133.78 | S123 | 100LB6 | 30000 | 11200 |

## 2.20 kW

| n2 [rpm] | M2 [Nm] | fs | i | Reductor | Motor | Fr2 D [N] | Fr2 C-L [N] |
|---|---|---|---|---|---|---|---|
| 331.6 | 59 | Ex | 8.63 | S052 | 90L2 | 3106 | 3106 |
| 256.7 | 76 | Ex | 11.14 | S052 | 90L2 | 3310 | 3310 |
| 209.4 | 93 | Ex | 13.66 | S052 | 90L2 | 3471 | 3471 |
| 187.3 | 104 | Ex | 15.27 | S052 | 90L2 | 3558 | 3558 |
| 182.5 | 111 | 2.2 | 8.00 | S062 | 112MR4 | 6516 | 2606 |
| 177.5 | 114 | 2.1 | 8.00 | S062 | 100LA4 | 6563 | 2625 |
| 175.6 | 111 | Ex | 16.29 | S052 | 90L2 | 3607 | 3607 |
| 169.3 | 119 | 1.0 | 8.63 | S052 | 112MR4 | 3611 | 3611 |
| 164.6 | 123 | 1.0 | 8.63 | S052 | 100LA4 | 3631 | 3631 |
| 153.5 | 127 | Ex | 18.63 | S052 | 90L2 | 3708 | 3708 |
| 153.0 | 132 | 2.0 | 9.55 | S062 | 112MR4 | 6814 | 2726 |
| 148.8 | 136 | 1.9 | 9.55 | S062 | 100LA4 | 6861 | 2744 |
| 146.3 | 133 | Ex | 19.55 | S062 | 90L2 | 6920 | 2768 |
| 136.0 | 143 | Ex | 21.04 | S052 | 90L2 | 3794 | 3794 |
| 130.8 | 156 | 2.5 | 7.34 | S082 | 112M6 | 15160 | 4332 |
| 129.3 | 151 | Ex | 22.13 | S082 | 90L2 | 15239 | 4354 |
| 126.7 | 161 | 2.5 | 7.34 | S082 | 112MA6 | 15309 | 4374 |
| 124.7 | 162 | 1.7 | 11.71 | S062 | 112MR4 | 7158 | 2863 |
| 123.4 | 158 | Ex | 23.18 | S062 | 90L2 | 7212 | 2885 |
| 121.3 | 166 | 1.7 | 11.71 | S062 | 100LA4 | 7204 | 2882 |
| 120.0 | 170 | 1.4 | 8.00 | S062 | 112M6 | 7211 | 2885 |
| 119.2 | 163 | Ex | 24.00 | S082 | 90L2 | 15625 | 4464 |
| 119.1 | 171 | 2.5 | 8.06 | S082 | 112M6 | 15604 | 4458 |
| 118.8 | 164 | Ex | 24.07 | S052 | 90L2 | 3884 | 3884 |
| 116.3 | 175 | 1.4 | 8.00 | S062 | 112MA6 | 7264 | 2906 |
| 115.3 | 177 | 2.4 | 8.06 | S082 | 112MA6 | 15756 | 4502 |
| 113.8 | 171 | Ex | 25.14 | S062 | 90L2 | 7350 | 2940 |
| 110.9 | 175 | Ex | 25.79 | S052 | 90L2 | 3928 | 3928 |
| 109.3 | 185 | 1.6 | 13.36 | S062 | 112MR4 | 7377 | 2951 |
| 106.3 | 190 | 1.6 | 13.36 | S062 | 100LA4 | 7423 | 2969 |
| 104.8 | 186 | Ex | 27.29 | S082 | 90L2 | 16251 | 4643 |
| 103.4 | 188 | Ex | 27.66 | S062 | 90L2 | 7511 | 3005 |
| 102.8 | 189 | Ex | 27.81 | S052 | 90L2 | 3973 | 3973 |

# 5.1 S MOTORREDUCTORES (50Hz)



## 2.20 kW

| n2 [rpm] | M2 [Nm] | fs | i | Reductor | Motor | Fr2 D [N] | Fr2 C-L [N] |
|---|---|---|---|---|---|---|---|
| 100.6 | 203 | 1.3 | 9.55 | S062 | 112M6 | 7501 | 3000 |
| 99.7 | 195 | Ex | 28.67 | S082 | 90L2 | 16498 | 4714 |
| 97.4 | 209 | 1.2 | 9.55 | S062 | 112MA6 | 7552 | 3021 |
| 96.5 | 211 | 2.2 | 9.94 | S082 | 112M6 | 16631 | 4752 |
| 95.3 | 204 | Ex | 30.00 | S062 | 90L2 | 7647 | 3059 |
| 93.5 | 218 | 2.2 | 9.94 | S082 | 112MA6 | 16791 | 4797 |
| 91.6 | 220 | 1.5 | 15.94 | S062 | 112MR4 | 7664 | 3066 |
| 90.0 | 216 | Ex | 31.78 | S082 | 90L2 | 17019 | 4863 |
| 89.1 | 226 | 1.4 | 15.94 | S062 | 100LA4 | 7708 | 3083 |
| 84.4 | 239 | 2.3 | 17.29 | S082 | 112MR4 | 17324 | 4950 |
| 82.7 | 246 | 2.1 | 11.61 | S082 | 112M6 | 17422 | 4978 |
| 82.1 | 246 | 2.3 | 17.29 | S082 | 100LA4 | 17469 | 4991 |
| 82.0 | 248 | 1.1 | 11.71 | S062 | 112M6 | 7823 | 3129 |
| 81.9 | 238 | Ex | 34.91 | S082 | 90L2 | 17508 | 5002 |
| 80.1 | 254 | 2.0 | 11.61 | S082 | 112MA6 | 17588 | 5025 |
| 79.4 | 256 | 1.1 | 11.71 | S062 | 112MA6 | 7871 | 3148 |
| 78.2 | 249 | Ex | 36.57 | S062 | 90L2 | 7968 | 3187 |
| 75.3 | 271 | 2.0 | 12.75 | S082 | 112M6 | 17917 | 5119 |
| 75.3 | 271 | 2.7 | 12.75 | S102 | 112M6 | 22000 | 6338 |
| 74.7 | 270 | 1.2 | 19.55 | S062 | 112MR4 | 7980 | 3192 |
| 72.9 | 279 | 1.9 | 12.75 | S082 | 112MA6 | 18000 | 5167 |
| 72.9 | 279 | 2.6 | 12.75 | S102 | 112MA6 | 22000 | 6400 |
| 72.6 | 278 | 1.2 | 19.55 | S062 | 100LA4 | 8021 | 3208 |
| 72.6 | 268 | Ex | 39.38 | S062 | 90L2 | 8082 | 3233 |
| 72.5 | 278 | 2.0 | 20.14 | S082 | 112MR4 | 18000 | 5179 |
| 71.9 | 283 | 1.1 | 13.36 | S062 | 112M6 | 8018 | 3207 |
| 71.4 | 273 | Ex | 40.05 | S082 | 90L2 | 18000 | 5212 |
| 70.5 | 286 | 1.9 | 20.14 | S082 | 100LA4 | 18000 | 5222 |
| 69.6 | 293 | 1.0 | 13.36 | S062 | 112MA6 | 8064 | 3225 |
| 66.4 | 293 | Ex | 43.05 | S082 | 90L2 | 18000 | 5325 |
| 66.0 | 306 | 1.9 | 22.13 | S082 | 112MR4 | 18000 | 5325 |
| 65.5 | 297 | Ex | 43.64 | S062 | 90L2 | 8236 | 3294 |
| 64.2 | 314 | 1.8 | 22.13 | S082 | 100LA4 | 18000 | 5369 |
| 63.0 | 320 | 1.1 | 23.18 | S062 | 112MR4 | 8222 | 3289 |
| 62.0 | 314 | Ex | 46.10 | S062 | 90L2 | 8314 | 3326 |
| 61.3 | 329 | 1.0 | 23.18 | S062 | 100LA4 | 8259 | 3304 |
| 60.8 | 332 | 1.7 | 24.00 | S082 | 112MR4 | 18000 | 5454 |
| 59.2 | 341 | 1.7 | 24.00 | S082 | 100LA4 | 18000 | 5498 |
| 56.9 | 342 | Ex | 50.25 | S082 | 90L2 | 18000 | 5572 |
| 55.8 | 365 | 2.6 | 17.21 | S102 | 112M6 | 22000 | 6948 |
| 55.5 | 367 | 1.5 | 17.29 | S082 | 112M6 | 18000 | 5597 |
| 54.0 | 377 | 2.5 | 17.21 | S102 | 112MA6 | 22000 | 7016 |
| 53.8 | 379 | 1.5 | 17.29 | S082 | 112MA6 | 18000 | 5649 |
| 53.5 | 377 | 1.7 | 27.29 | S082 | 112MR4 | 18000 | 5660 |
| 53.4 | 364 | Ex | 53.53 | S062 | 90L2 | 8515 | 3406 |

# 5.1 S MOTORREDUCTORES (50Hz)



## 2.20 kW

| n2 [rpm] | M2 [Nm] | fs | i | Reductor | Motor | Fr2 D [N] | Fr2 C-L [N] |
|---|---|---|---|---|---|---|---|
| 52.7 | 369 | Ex | 54.27 | S082 | 90L2 | 18000 | 5698 |
| 52.0 | 374 | Ex | 55.00 | S062 | 90L2 | 8549 | 3419 |
| 52.0 | 388 | 1.7 | 27.29 | S082 | 100LA4 | 18000 | 5706 |
| 50.9 | 396 | 1.6 | 28.67 | S082 | 112MR4 | 18000 | 5741 |
| 50.5 | 403 | 2.5 | 19.00 | S102 | 112M6 | 22000 | 7159 |
| 49.5 | 407 | 1.6 | 28.67 | S082 | 100LA4 | 18000 | 5787 |
| 48.9 | 416 | 2.4 | 19.00 | S102 | 112MA6 | 22000 | 7228 |
| 48.9 | 413 | 2.6 | 29.87 | S102 | 112MR4 | 22000 | 7234 |
| 47.7 | 427 | 1.3 | 20.14 | S082 | 112M6 | 18000 | 5847 |
| 47.5 | 424 | 2.5 | 29.87 | S102 | 100LA4 | 22000 | 7295 |
| 46.2 | 441 | 1.3 | 20.14 | S082 | 112MA6 | 18000 | 5900 |
| 46.1 | 422 | Ex | 61.98 | S082 | 90L2 | 18000 | 5919 |
| 45.9 | 439 | 1.9 | 31.78 | S082 | 112MR4 | 18000 | 5912 |
| 45.1 | 448 | 2.9 | 32.40 | S102 | 112MR4 | 22000 | 7414 |
| 44.7 | 451 | 1.9 | 31.78 | S082 | 100LA4 | 18000 | 5959 |
| 43.8 | 460 | 2.8 | 32.40 | S102 | 100LA4 | 22000 | 7476 |
| 43.4 | 469 | 1.2 | 22.13 | S082 | 112M6 | 18000 | 6004 |
| 43.4 | 469 | 2.2 | 22.13 | S102 | 112M6 | 22000 | 7495 |
| 42.4 | 450 | Ex | 67.52 | S083 | 90L2 | 18000 | 6074 |
| 42.0 | 485 | 1.2 | 22.13 | S082 | 112MA6 | 18000 | 6058 |
| 42.0 | 485 | 2.1 | 22.13 | S102 | 112MA6 | 22000 | 7566 |
| 41.8 | 482 | 1.8 | 34.91 | S082 | 112MR4 | 18000 | 6071 |
| 41.8 | 482 | 2.5 | 34.91 | S102 | 112MR4 | 22000 | 7581 |
| 40.7 | 496 | 1.7 | 34.91 | S082 | 100LA4 | 18000 | 6118 |
| 40.7 | 496 | 2.4 | 34.91 | S102 | 100LA4 | 22000 | 7644 |
| 40.0 | 509 | 1.1 | 24.00 | S082 | 112M6 | 18000 | 6142 |
| 39.9 | 505 | 1.0 | 36.57 | S062 | 112MR4 | 8714 | 3486 |
| 39.5 | 515 | 2.1 | 24.28 | S102 | 112M6 | 22000 | 7705 |
| 38.8 | 526 | 1.1 | 24.00 | S082 | 112MA6 | 18000 | 6196 |
| 38.6 | 494 | Ex | 74.18 | S083 | 90L2 | 18000 | 6237 |
| 38.3 | 532 | 2.0 | 24.28 | S102 | 112MA6 | 22000 | 7777 |
| 38.1 | 529 | 2.4 | 38.30 | S102 | 112MR4 | 22000 | 7793 |
| 37.1 | 544 | 2.4 | 38.30 | S102 | 100LA4 | 22000 | 7857 |
| 36.5 | 553 | 1.5 | 40.05 | S082 | 112MR4 | 18000 | 6307 |
| 36.5 | 559 | 1.9 | 26.33 | S102 | 112M6 | 22000 | 7892 |
| 35.5 | 569 | 1.5 | 40.05 | S082 | 100LA4 | 18000 | 6355 |
| 35.3 | 577 | 1.9 | 26.33 | S102 | 112MA6 | 22000 | 7966 |
| 35.2 | 579 | 1.1 | 27.29 | S082 | 112M6 | 18000 | 6363 |
| 34.1 | 598 | 1.1 | 27.29 | S082 | 112MA6 | 18000 | 6418 |
| 33.9 | 595 | 1.4 | 43.05 | S082 | 112MR4 | 18000 | 6433 |
| 33.5 | 608 | 1.1 | 28.67 | S082 | 112M6 | 18000 | 6449 |
| 33.2 | 608 | 1.8 | 44.00 | S102 | 112MR4 | 22000 | 8118 |
| 33.0 | 612 | 1.4 | 43.05 | S082 | 100LA4 | 18000 | 6481 |
| 32.4 | 628 | 1.0 | 28.67 | S082 | 112MA6 | 18000 | 6505 |
| 32.3 | 625 | 1.8 | 44.00 | S102 | 100LA4 | 22000 | 8184 |

# 5.1 S MOTORREDUCTORES (50Hz)



## 2.20 kW

| n2 [rpm] | M2 [Nm] | fs | i | Reductor | Motor | Fr2 D [N] | Fr2 C-L [N] |
|---|---|---|---|---|---|---|---|
| 32.1 | 634 | 1.7 | 29.87 | S102 | 112M6 | 22000 | 8189 |
| 31.3 | 610 | Ex | 91.49 | S083 | 90L2 | 18000 | 6609 |
| 31.1 | 654 | 1.7 | 29.87 | S102 | 112MA6 | 22000 | 8265 |
| 31.0 | 651 | 2.1 | 47.13 | S102 | 112MR4 | 22000 | 8282 |
| 30.2 | 674 | 1.3 | 31.78 | S082 | 112M6 | 18000 | 6630 |
| 30.1 | 669 | 2.0 | 47.13 | S102 | 100LA4 | 22000 | 8349 |
| 29.8 | 677 | 3.0 | 49.04 | S122 | 112MR4 | 30000 | 11200 |
| 29.6 | 688 | 1.9 | 32.40 | S102 | 112M6 | 22000 | 8385 |
| 29.3 | 696 | 1.2 | 31.78 | S082 | 112MA6 | 18000 | 6686 |
| 29.1 | 694 | 1.2 | 50.25 | S082 | 112MR4 | 18000 | 6705 |
| 29.0 | 697 | 2.9 | 49.04 | S122 | 100LA4 | 30000 | 11200 |
| 28.7 | 710 | 1.8 | 32.40 | S102 | 112MA6 | 22000 | 8462 |
| 28.3 | 714 | 1.2 | 50.25 | S082 | 100LA4 | 18000 | 6755 |
| 27.5 | 741 | 1.1 | 34.91 | S082 | 112M6 | 18000 | 6796 |
| 27.5 | 741 | 1.6 | 34.91 | S102 | 112M6 | 22000 | 8567 |
| 27.2 | 743 | 3.0 | 53.75 | S122 | 112MR4 | 30000 | 11200 |
| 26.9 | 750 | 1.1 | 54.27 | S082 | 112MR4 | 18000 | 6842 |
| 26.6 | 765 | 1.1 | 34.91 | S082 | 112MA6 | 18000 | 6853 |
| 26.6 | 765 | 1.6 | 34.91 | S102 | 112MA6 | 22000 | 8645 |
| 26.5 | 762 | 1.5 | 55.14 | S102 | 112MR4 | 22000 | 8666 |
| 26.4 | 763 | 2.9 | 53.75 | S122 | 100LA4 | 30000 | 11200 |
| 26.2 | 771 | 1.1 | 54.27 | S082 | 100LA4 | 18000 | 6892 |
| 25.8 | 783 | 1.4 | 55.14 | S102 | 100LA4 | 22000 | 8735 |
| 25.1 | 813 | 1.6 | 38.30 | S102 | 112M6 | 22000 | 8797 |
| 24.6 | 821 | 1.7 | 59.40 | S102 | 112MR4 | 22000 | 8852 |
| 24.3 | 839 | 1.5 | 38.30 | S102 | 112MA6 | 22000 | 8877 |
| 24.0 | 850 | 1.0 | 40.05 | S082 | 112M6 | 18000 | 7041 |
| 23.9 | 844 | 1.6 | 59.40 | S102 | 100LA4 | 22000 | 8922 |
| 23.4 | 871 | 2.9 | 41.07 | S122 | 112M6 | 30000 | 11200 |
| 22.6 | 900 | 2.8 | 41.07 | S122 | 112MA6 | 30000 | 11200 |
| 22.1 | 912 | 2.8 | 66.00 | S122 | 112MR4 | 30000 | 11200 |
| 22.0 | 925 | 2.8 | 43.60 | S122 | 112M6 | 30000 | 11200 |
| 21.8 | 934 | 1.2 | 44.00 | S102 | 112M6 | 22000 | 9000 |
| 21.5 | 937 | 1.5 | 67.84 | S102 | 112MR4 | 22000 | 9000 |
| 21.5 | 937 | 2.7 | 66.00 | S122 | 100LA4 | 30000 | 11200 |
| 21.3 | 955 | 2.7 | 43.60 | S122 | 112MA6 | 30000 | 11200 |
| 21.1 | 964 | 1.2 | 44.00 | S102 | 112MA6 | 22000 | 9000 |
| 20.9 | 964 | 1.4 | 67.84 | S102 | 100LA4 | 22000 | 9000 |
| 20.5 | 961 | 2.4 | 71.07 | S123 | 112MR4 | 30000 | 11200 |
| 20.4 | 1000 | 1.4 | 47.13 | S102 | 112M6 | 22000 | 9000 |
| 20.0 | 988 | 2.3 | 71.07 | S123 | 100LA4 | 30000 | 11200 |
| 19.7 | 1032 | 1.3 | 47.13 | S102 | 112MA6 | 22000 | 9000 |
| 19.7 | 1003 | 1.4 | 74.18 | S103 | 112MR4 | 22000 | 9000 |
| 19.6 | 1041 | 2.0 | 49.04 | S122 | 112M6 | 30000 | 11200 |
| 19.1 | 1032 | 1.3 | 74.18 | S103 | 100LA4 | 22000 | 9000 |

# 5.1 S MOTORREDUCTORES (50Hz)



## 2.20 kW

| n2 [rpm] | M2 [Nm] | fs | i | Reductor | Motor | Fr2 D [N] | Fr2 C-L [N] |
|---|---|---|---|---|---|---|---|
| 19.0 | 1074 | 1.9 | 49.04 | S122 | 112MA6 | 30000 | 11200 |
| 17.9 | 1101 | 1.2 | 81.39 | S103 | 112MR4 | 22000 | 9000 |
| 17.9 | 1141 | 1.9 | 53.75 | S122 | 112M6 | 30000 | 11200 |
| 17.4 | 1132 | 1.2 | 81.39 | S103 | 100LA4 | 22000 | 9000 |
| 17.3 | 1177 | 1.9 | 53.75 | S122 | 112MA6 | 30000 | 11200 |
| 16.7 | 1180 | 2.2 | 87.27 | S123 | 112MR4 | 30000 | 11200 |
| 16.3 | 1214 | 2.1 | 87.27 | S123 | 100LA4 | 30000 | 11200 |
| 16.2 | 1260 | 1.1 | 59.40 | S102 | 112M6 | 22000 | 9000 |
| 15.7 | 1301 | 1.0 | 59.40 | S102 | 112MA6 | 22000 | 9000 |
| 14.6 | 1355 | 1.0 | 100.15 | S103 | 112MR4 | 22000 | 9000 |
| 14.5 | 1401 | 1.8 | 66.00 | S122 | 112M6 | 30000 | 11200 |
| 14.1 | 1446 | 1.8 | 66.00 | S122 | 112MA6 | 30000 | 11200 |
| 13.5 | 1477 | 1.6 | 71.07 | S123 | 112M6 | 30000 | 11200 |
| 13.1 | 1524 | 1.5 | 71.07 | S123 | 112MA6 | 30000 | 11200 |
| 13.0 | 1522 | 1.7 | 112.52 | S123 | 112MR4 | 30000 | 11200 |
| 12.6 | 1565 | 1.6 | 112.52 | S123 | 100LA4 | 30000 | 11200 |
| 11.8 | 1668 | 1.5 | 123.33 | S123 | 112MR4 | 30000 | 11200 |
| 11.5 | 1715 | 1.5 | 123.33 | S123 | 100LA4 | 30000 | 11200 |
| 11.0 | 1813 | 1.4 | 87.27 | S123 | 112M6 | 30000 | 11200 |
| 10.9 | 1810 | 1.4 | 133.78 | S123 | 112MR4 | 30000 | 11200 |
| 10.7 | 1872 | 1.4 | 87.27 | S123 | 112MA6 | 30000 | 11200 |
| 10.6 | 1861 | 1.4 | 133.78 | S123 | 100LA4 | 30000 | 11200 |
| 9.6 | 2048 | 1.2 | 151.43 | S123 | 112MR4 | 30000 | 11200 |
| 9.4 | 2106 | 1.2 | 151.43 | S123 | 100LA4 | 30000 | 11200 |
| 8.5 | 2338 | 1.1 | 112.52 | S123 | 112M6 | 30000 | 11200 |
| 8.3 | 2413 | 1.1 | 112.52 | S123 | 112MA6 | 30000 | 11200 |
| 8.2 | 2401 | 1.1 | 177.53 | S123 | 112MR4 | 30000 | 11200 |
| 8.0 | 2469 | 1.0 | 177.53 | S123 | 100LA4 | 30000 | 11200 |

## 3.00 kW

| n2 [rpm] | M2 [Nm] | fs | i | Reductor | Motor | Fr2 D [N] | Fr2 C-L [N] |
|---|---|---|---|---|---|---|---|
| 336.2 | 79 | Ex | 8.63 | S052 | 100L2 | 2972 | 2972 |
| 332.8 | 80 | Ex | 8.63 | S052 | 100LA2 | 2979 | 2979 |
| 260.3 | 102 | Ex | 11.14 | S052 | 100L2 | 3141 | 3141 |
| 257.6 | 103 | Ex | 11.14 | S052 | 100LA2 | 3148 | 3148 |
| 212.4 | 125 | Ex | 13.66 | S052 | 100L2 | 3267 | 3267 |
| 210.2 | 126 | Ex | 13.66 | S052 | 100LA2 | 3273 | 3273 |
| 197.6 | 139 | 2.8 | 7.34 | S082 | 112MS4 | 13221 | 3777 |
| 193.5 | 142 | 2.8 | 7.34 | S082 | 100LB4 | 13306 | 3802 |
| 189.9 | 140 | Ex | 15.27 | S052 | 100L2 | 3331 | 3331 |
| 187.9 | 141 | Ex | 15.27 | S052 | 100LA2 | 3337 | 3337 |
| 181.3 | 152 | 1.6 | 8.00 | S062 | 112MS4 | 6271 | 2508 |
| 179.8 | 153 | 2.8 | 8.06 | S082 | 112MS4 | 13607 | 3888 |

# 5.1 S MOTORREDUCTORES (50Hz)



## 3.00 kW

| n2 [rpm] | M2 [Nm] | fs | i | Reductor | Motor | Fr2 D [N] | Fr2 C-L [N] |
|---|---|---|---|---|---|---|---|
| 178.1 | 149 | Ex | 16.29 | S052 | 100L2 | 3366 | 3366 |
| 177.5 | 155 | 1.5 | 8.00 | S062 | 100LB4 | 6301 | 2520 |
| 176.2 | 151 | Ex | 16.29 | S052 | 100LA2 | 3371 | 3371 |
| 176.1 | 156 | 2.8 | 8.06 | S082 | 100LB4 | 13694 | 3912 |
| 167.7 | 158 | Ex | 17.29 | S082 | 100L2 | 13919 | 3977 |
| 165.9 | 160 | Ex | 17.29 | S082 | 100LA2 | 13963 | 3989 |
| 151.9 | 181 | 1.4 | 9.55 | S062 | 112MS4 | 6519 | 2608 |
| 148.8 | 185 | 1.4 | 9.55 | S062 | 100LB4 | 6548 | 2619 |
| 148.3 | 179 | Ex | 19.55 | S062 | 100L2 | 6593 | 2637 |
| 146.8 | 181 | Ex | 19.55 | S062 | 100LA2 | 6608 | 2643 |
| 145.8 | 189 | 2.5 | 9.94 | S082 | 112MS4 | 14500 | 4143 |
| 144.0 | 184 | Ex | 20.14 | S082 | 100L2 | 14577 | 4165 |
| 142.8 | 193 | 2.4 | 9.94 | S082 | 100LB4 | 14592 | 4169 |
| 142.5 | 186 | Ex | 20.14 | S082 | 100LA2 | 14623 | 4178 |
| 132.2 | 210 | 1.9 | 7.34 | S082 | 132S6 | 14928 | 4265 |
| 131.1 | 202 | Ex | 22.13 | S082 | 100L2 | 14996 | 4285 |
| 130.8 | 212 | 1.9 | 7.34 | S082 | 132SA6 | 14974 | 4278 |
| 129.7 | 205 | Ex | 22.13 | S082 | 100LA2 | 15043 | 4298 |
| 126.7 | 219 | 1.8 | 7.34 | S082 | 112MB6 | 15117 | 4319 |
| 125.1 | 212 | Ex | 23.18 | S062 | 100L2 | 6829 | 2732 |
| 124.9 | 220 | 2.3 | 11.61 | S082 | 112MS4 | 15188 | 4339 |
| 123.8 | 222 | 1.3 | 11.71 | S062 | 112MS4 | 6794 | 2718 |
| 123.8 | 214 | Ex | 23.18 | S062 | 100LA2 | 6843 | 2737 |
| 122.4 | 225 | 2.2 | 11.61 | S082 | 100LB4 | 15283 | 4367 |
| 121.3 | 227 | 1.2 | 11.71 | S062 | 100LB4 | 6821 | 2728 |
| 120.8 | 220 | Ex | 24.00 | S082 | 100L2 | 15366 | 4390 |
| 120.3 | 231 | 1.9 | 8.06 | S082 | 132S6 | 15352 | 4386 |
| 120.3 | 231 | 2.6 | 8.06 | S102 | 132S6 | 19006 | 5430 |
| 119.6 | 222 | Ex | 24.00 | S082 | 100LA2 | 15414 | 4404 |
| 119.1 | 233 | 1.9 | 8.06 | S082 | 132SA6 | 15399 | 4400 |
| 119.1 | 233 | 2.6 | 8.06 | S102 | 132SA6 | 19067 | 5448 |
| 115.3 | 230 | Ex | 25.14 | S062 | 100L2 | 6938 | 2775 |
| 115.3 | 241 | 1.8 | 8.06 | S082 | 112MB6 | 15545 | 4441 |
| 115.3 | 241 | 2.5 | 8.06 | S102 | 112MB6 | 19255 | 5501 |
| 114.1 | 233 | Ex | 25.14 | S062 | 100LA2 | 6951 | 2781 |
| 113.7 | 242 | 2.2 | 12.75 | S082 | 112MS4 | 15618 | 4462 |
| 111.4 | 247 | 2.2 | 12.75 | S082 | 100LB4 | 15715 | 4490 |
| 109.6 | 253 | 2.6 | 8.85 | S102 | 132S6 | 19557 | 5588 |
| 108.6 | 253 | 1.2 | 13.36 | S062 | 112MS4 | 6960 | 2784 |
| 108.5 | 256 | 2.5 | 8.85 | S102 | 132SA6 | 19620 | 5606 |
| 106.3 | 259 | 1.2 | 13.36 | S062 | 100LB4 | 6985 | 2794 |
| 106.3 | 250 | Ex | 27.29 | S082 | 100L2 | 15963 | 4561 |
| 105.2 | 252 | Ex | 27.29 | S082 | 100LA2 | 16012 | 4575 |
| 105.1 | 264 | 2.5 | 8.85 | S102 | 112MB6 | 19812 | 5661 |
| 104.9 | 253 | Ex | 27.66 | S062 | 100L2 | 7060 | 2824 |

# 5.1 S MOTORREDUCTORES (50Hz)



## 3.00 kW

| n2 [rpm] | M2 [Nm] | fs | i | Reductor | Motor | Fr2 D [N] | Fr2 C-L [N] |
|---|---|---|---|---|---|---|---|
| 103.8 | 256 | Ex | 27.66 | S062 | 100LA2 | 7073 | 2829 |
| 101.1 | 262 | Ex | 28.67 | S082 | 100L2 | 16198 | 4628 |
| 100.1 | 265 | Ex | 28.67 | S082 | 100LA2 | 16248 | 4642 |
| 97.5 | 285 | 1.7 | 9.94 | S082 | 132S6 | 16330 | 4666 |
| 96.7 | 275 | Ex | 30.00 | S062 | 100L2 | 7160 | 2864 |
| 96.5 | 288 | 1.6 | 9.94 | S082 | 132SA6 | 16379 | 4680 |
| 95.7 | 277 | Ex | 30.00 | S062 | 100LA2 | 7172 | 2869 |
| 93.5 | 297 | 1.6 | 9.94 | S082 | 112MB6 | 16531 | 4723 |
| 91.3 | 291 | Ex | 31.78 | S082 | 100L2 | 16693 | 4770 |
| 91.0 | 302 | 1.1 | 15.94 | S062 | 112MS4 | 7164 | 2866 |
| 90.3 | 294 | Ex | 31.78 | S082 | 100LA2 | 16744 | 4784 |
| 89.1 | 309 | 1.0 | 15.94 | S062 | 100LB4 | 7186 | 2875 |
| 89.1 | 312 | 2.2 | 10.88 | S102 | 132S6 | 20837 | 5954 |
| 88.2 | 315 | 2.2 | 10.88 | S102 | 132SA6 | 20903 | 5972 |
| 85.4 | 325 | 2.1 | 10.88 | S102 | 112MB6 | 21106 | 6030 |
| 84.2 | 326 | 2.9 | 17.21 | S102 | 112MS4 | 21205 | 6059 |
| 83.8 | 328 | 1.7 | 17.29 | S082 | 112MS4 | 17072 | 4878 |
| 83.6 | 332 | 1.5 | 11.61 | S082 | 132S6 | 17077 | 4879 |
| 83.1 | 319 | Ex | 34.91 | S082 | 100L2 | 17155 | 4902 |
| 82.7 | 336 | 1.5 | 11.61 | S082 | 132SA6 | 17128 | 4894 |
| 82.5 | 333 | 2.8 | 17.21 | S102 | 100LB4 | 21340 | 6097 |
| 82.2 | 323 | Ex | 34.91 | S082 | 100LA2 | 17207 | 4916 |
| 82.1 | 335 | 1.7 | 17.29 | S082 | 100LB4 | 17175 | 4907 |
| 80.1 | 347 | 1.5 | 11.61 | S082 | 112MB6 | 17284 | 4938 |
| 79.3 | 335 | Ex | 36.57 | S062 | 100L2 | 7380 | 2952 |
| 78.5 | 338 | Ex | 36.57 | S062 | 100LA2 | 7390 | 2956 |
| 76.3 | 360 | 2.8 | 19.00 | S102 | 112MS4 | 21848 | 6242 |
| 76.1 | 365 | 1.5 | 12.75 | S082 | 132S6 | 17542 | 5012 |
| 76.1 | 365 | 2.0 | 12.75 | S102 | 132S6 | 21859 | 6245 |
| 75.3 | 369 | 1.5 | 12.75 | S082 | 132SA6 | 17593 | 5027 |
| 75.3 | 369 | 2.0 | 12.75 | S102 | 132SA6 | 21927 | 6265 |
| 74.7 | 368 | 2.7 | 19.00 | S102 | 100LB4 | 21986 | 6282 |
| 73.7 | 360 | Ex | 39.38 | S062 | 100L2 | 7452 | 2981 |
| 72.9 | 364 | Ex | 39.38 | S062 | 100LA2 | 7461 | 2985 |
| 72.9 | 381 | 1.4 | 12.75 | S082 | 112MB6 | 17752 | 5072 |
| 72.9 | 381 | 1.9 | 12.75 | S102 | 112MB6 | 22000 | 6325 |
| 72.4 | 367 | Ex | 40.05 | S082 | 100L2 | 17845 | 5099 |
| 72.0 | 382 | 1.5 | 20.14 | S082 | 112MS4 | 17830 | 5094 |
| 71.7 | 370 | Ex | 40.05 | S082 | 100LA2 | 17898 | 5114 |
| 70.5 | 390 | 1.4 | 20.14 | S082 | 100LB4 | 17936 | 5125 |
| 69.3 | 401 | 2.2 | 13.99 | S102 | 132S6 | 22000 | 6422 |
| 68.6 | 405 | 2.1 | 13.99 | S102 | 132SA6 | 22000 | 6442 |
| 67.4 | 394 | Ex | 43.05 | S082 | 100L2 | 18000 | 5204 |
| 66.7 | 398 | Ex | 43.05 | S082 | 100LA2 | 18000 | 5220 |
| 66.5 | 399 | Ex | 43.64 | S062 | 100L2 | 7540 | 3016 |

# 5.1 S MOTORREDUCTORES (50Hz)



## 3.00 kW

| n2 [rpm] | M2 [Nm] | fs | i | Reductor | Motor | Fr2 D [N] | Fr2 C-L [N] |
|---|---|---|---|---|---|---|---|
| 66.5 | 418 | 2.1 | 13.99 | S102 | 112MB6 | 22000 | 6503 |
| 65.8 | 404 | Ex | 43.64 | S062 | 100LA2 | 7549 | 3019 |
| 65.5 | 420 | 1.4 | 22.13 | S082 | 112MS4 | 18000 | 5231 |
| 65.5 | 420 | 2.4 | 22.13 | S102 | 112MS4 | 22000 | 6534 |
| 64.2 | 429 | 1.3 | 22.13 | S082 | 100LB4 | 18000 | 5261 |
| 64.2 | 429 | 2.4 | 22.13 | S102 | 100LB4 | 22000 | 6575 |
| 60.4 | 455 | 1.3 | 24.00 | S082 | 112MS4 | 18000 | 5351 |
| 59.7 | 460 | 2.3 | 24.28 | S102 | 112MS4 | 22000 | 6716 |
| 59.2 | 465 | 1.2 | 24.00 | S082 | 100LB4 | 18000 | 5381 |
| 58.5 | 470 | 2.3 | 24.28 | S102 | 100LB4 | 22000 | 6758 |
| 57.7 | 460 | Ex | 50.25 | S082 | 100L2 | 18000 | 5434 |
| 57.1 | 465 | Ex | 50.25 | S082 | 100LA2 | 18000 | 5450 |
| 56.4 | 493 | 1.9 | 17.21 | S102 | 132S6 | 22000 | 6829 |
| 56.1 | 495 | 1.1 | 17.29 | S082 | 132S6 | 18000 | 5456 |
| 55.8 | 498 | 1.9 | 17.21 | S102 | 132SA6 | 22000 | 6850 |
| 55.5 | 500 | 1.1 | 17.29 | S082 | 132SA6 | 18000 | 5472 |
| 55.1 | 499 | 2.2 | 26.33 | S102 | 112MS4 | 22000 | 6879 |
| 54.0 | 514 | 1.8 | 17.21 | S102 | 112MB6 | 22000 | 6914 |
| 53.9 | 510 | 2.1 | 26.33 | S102 | 100LB4 | 22000 | 6922 |
| 53.8 | 517 | 1.1 | 17.29 | S082 | 112MB6 | 18000 | 5519 |
| 53.4 | 497 | Ex | 54.27 | S082 | 100L2 | 18000 | 5550 |
| 53.1 | 518 | 1.3 | 27.29 | S082 | 112MS4 | 18000 | 5542 |
| 52.9 | 502 | Ex | 54.27 | S082 | 100LA2 | 18000 | 5566 |
| 52.0 | 529 | 1.2 | 27.29 | S082 | 100LB4 | 18000 | 5573 |
| 51.1 | 544 | 1.9 | 19.00 | S102 | 132S6 | 22000 | 7029 |
| 50.6 | 544 | 1.2 | 28.67 | S082 | 112MS4 | 18000 | 5617 |
| 50.5 | 550 | 1.8 | 19.00 | S102 | 132SA6 | 22000 | 7051 |
| 49.5 | 555 | 1.2 | 28.67 | S082 | 100LB4 | 18000 | 5648 |
| 48.9 | 568 | 1.8 | 19.00 | S102 | 112MB6 | 22000 | 7116 |
| 48.5 | 567 | 1.9 | 29.87 | S102 | 112MS4 | 22000 | 7137 |
| 47.5 | 579 | 1.9 | 29.87 | S102 | 100LB4 | 22000 | 7181 |
| 46.8 | 567 | Ex | 61.98 | S082 | 100L2 | 18000 | 5754 |
| 46.3 | 573 | Ex | 61.98 | S082 | 100LA2 | 18000 | 5770 |
| 45.6 | 603 | 1.4 | 31.78 | S082 | 112MS4 | 18000 | 5773 |
| 44.8 | 615 | 2.1 | 32.40 | S102 | 112MS4 | 22000 | 7307 |
| 44.7 | 615 | 1.4 | 31.78 | S082 | 100LB4 | 18000 | 5805 |
| 43.8 | 634 | 1.6 | 22.13 | S102 | 132S6 | 22000 | 7346 |
| 43.8 | 628 | 2.0 | 32.40 | S102 | 100LB4 | 22000 | 7352 |
| 43.4 | 640 | 1.6 | 22.13 | S102 | 132SA6 | 22000 | 7368 |
| 42.9 | 605 | Ex | 67.52 | S083 | 100L2 | 18000 | 5899 |
| 42.5 | 611 | Ex | 67.52 | S083 | 100LA2 | 18000 | 5915 |
| 42.0 | 661 | 1.5 | 22.13 | S102 | 112MB6 | 22000 | 7435 |
| 41.5 | 662 | 1.3 | 34.91 | S082 | 112MS4 | 18000 | 5917 |
| 41.5 | 662 | 1.8 | 34.91 | S102 | 112MS4 | 22000 | 7466 |
| 40.7 | 676 | 1.3 | 34.91 | S082 | 100LB4 | 18000 | 5949 |

# 5.1 S MOTORREDUCTORES (50Hz)



## 3.00 kW

| n2 [rpm] | M2 [Nm] | fs | i | Reductor | Motor | Fr2 D [N] | Fr2 C-L [N] |
|---|---|---|---|---|---|---|---|
| 40.7 | 676 | 1.8 | 34.91 | S102 | 100LB4 | 22000 | 7510 |
| 40.0 | 695 | 1.6 | 24.28 | S102 | 132S6 | 22000 | 7543 |
| 39.5 | 702 | 1.5 | 24.28 | S102 | 132SA6 | 22000 | 7566 |
| 39.1 | 665 | Ex | 74.18 | S083 | 100L2 | 18000 | 6046 |
| 38.7 | 672 | Ex | 74.18 | S083 | 100LA2 | 18000 | 6063 |
| 38.3 | 725 | 1.5 | 24.28 | S102 | 112MB6 | 22000 | 7634 |
| 37.9 | 727 | 1.8 | 38.30 | S102 | 112MS4 | 22000 | 7665 |
| 37.1 | 742 | 1.7 | 38.30 | S102 | 100LB4 | 22000 | 7711 |
| 36.8 | 754 | 1.4 | 26.33 | S102 | 132S6 | 22000 | 7719 |
| 36.5 | 762 | 1.4 | 26.33 | S102 | 132SA6 | 22000 | 7742 |
| 36.2 | 760 | 1.1 | 40.05 | S082 | 112MS4 | 18000 | 6129 |
| 35.5 | 776 | 1.1 | 40.05 | S082 | 100LB4 | 18000 | 6161 |
| 35.3 | 787 | 1.4 | 26.33 | S102 | 112MB6 | 22000 | 7811 |
| 35.3 | 779 | 3.3 | 41.07 | S122 | 112MS4 | 30000 | 11167 |
| 34.6 | 795 | 3.2 | 41.07 | S122 | 100LB4 | 30000 | 11200 |
| 33.9 | 819 | 2.6 | 28.60 | S122 | 132S6 | 30000 | 11200 |
| 33.7 | 817 | 1.0 | 43.05 | S082 | 112MS4 | 18000 | 6240 |
| 33.6 | 828 | 2.6 | 28.60 | S122 | 132SA6 | 30000 | 11200 |
| 33.3 | 827 | 3.1 | 43.60 | S122 | 112MS4 | 30000 | 11200 |
| 33.0 | 834 | 1.0 | 43.05 | S082 | 100LB4 | 18000 | 6273 |
| 33.0 | 835 | 1.3 | 44.00 | S102 | 112MS4 | 22000 | 7969 |
| 32.6 | 844 | 3.0 | 43.60 | S122 | 100LB4 | 30000 | 11200 |
| 32.5 | 855 | 1.3 | 29.87 | S102 | 132S6 | 22000 | 7995 |
| 32.5 | 854 | 2.5 | 28.60 | S122 | 112MB6 | 30000 | 11200 |
| 32.3 | 852 | 1.3 | 44.00 | S102 | 100LB4 | 22000 | 8016 |
| 32.1 | 864 | 1.2 | 29.87 | S102 | 132SA6 | 22000 | 8018 |
| 31.8 | 874 | 2.9 | 30.51 | S122 | 132S6 | 30000 | 11200 |
| 31.5 | 883 | 2.9 | 30.51 | S122 | 132SA6 | 30000 | 11200 |
| 31.1 | 892 | 1.2 | 29.87 | S102 | 112MB6 | 22000 | 8089 |
| 30.8 | 894 | 1.5 | 47.13 | S102 | 112MS4 | 22000 | 8122 |
| 30.5 | 911 | 2.8 | 30.51 | S122 | 112MB6 | 30000 | 11200 |
| 30.1 | 913 | 1.5 | 47.13 | S102 | 100LB4 | 22000 | 8169 |
| 29.9 | 928 | 1.4 | 32.40 | S102 | 132S6 | 22000 | 8176 |
| 29.6 | 938 | 1.4 | 32.40 | S102 | 132SA6 | 22000 | 8200 |
| 29.6 | 930 | 2.2 | 49.04 | S122 | 112MS4 | 30000 | 11200 |
| 29.0 | 958 | 2.7 | 33.44 | S122 | 132S6 | 30000 | 11200 |
| 29.0 | 950 | 2.2 | 49.04 | S122 | 100LB4 | 30000 | 11200 |
| 28.7 | 968 | 1.3 | 32.40 | S102 | 112MB6 | 22000 | 8271 |
| 28.7 | 968 | 2.6 | 33.44 | S122 | 132SA6 | 30000 | 11200 |
| 27.8 | 1000 | 1.2 | 34.91 | S102 | 132S6 | 22000 | 8344 |
| 27.8 | 999 | 2.6 | 33.44 | S122 | 112MB6 | 30000 | 11200 |
| 27.6 | 1008 | 2.5 | 35.20 | S122 | 132S6 | 30000 | 11200 |
| 27.5 | 1010 | 1.2 | 34.91 | S102 | 132SA6 | 22000 | 8367 |
| 27.3 | 1019 | 2.5 | 35.20 | S122 | 132SA6 | 30000 | 11200 |
| 27.0 | 1020 | 2.2 | 53.75 | S122 | 112MS4 | 30000 | 11200 |

# 5.1 S MOTORREDUCTORES (50Hz)



## 3.00 kW

| n2 [rpm] | M2 [Nm] | fs | i | Reductor | Motor | Fr2 D [N] | Fr2 C-L [N] |
|---|---|---|---|---|---|---|---|
| 26.6 | 1043 | 1.1 | 34.91 | S102 | 112MB6 | 22000 | 8439 |
| 26.4 | 1051 | 2.4 | 35.20 | S122 | 112MB6 | 30000 | 11200 |
| 26.4 | 1041 | 2.1 | 53.75 | S122 | 100LB4 | 30000 | 11200 |
| 26.3 | 1046 | 1.1 | 55.14 | S102 | 112MS4 | 22000 | 8476 |
| 25.8 | 1068 | 1.0 | 55.14 | S102 | 100LB4 | 22000 | 8524 |
| 25.3 | 1097 | 1.2 | 38.30 | S102 | 132S6 | 22000 | 8554 |
| 25.1 | 1108 | 1.2 | 38.30 | S102 | 132SA6 | 22000 | 8578 |
| 24.4 | 1127 | 1.2 | 59.40 | S102 | 112MS4 | 22000 | 8647 |
| 24.3 | 1144 | 1.1 | 38.30 | S102 | 112MB6 | 22000 | 8651 |
| 23.9 | 1151 | 1.2 | 59.40 | S102 | 100LB4 | 22000 | 8695 |
| 23.6 | 1176 | 2.2 | 41.07 | S122 | 132S6 | 30000 | 11200 |
| 23.4 | 1188 | 2.2 | 41.07 | S122 | 132SA6 | 30000 | 11200 |
| 22.6 | 1227 | 2.1 | 41.07 | S122 | 112MB6 | 30000 | 11200 |
| 22.2 | 1249 | 2.1 | 43.60 | S122 | 132S6 | 30000 | 11200 |
| 22.0 | 1262 | 2.0 | 43.60 | S122 | 132SA6 | 30000 | 11200 |
| 22.0 | 1252 | 2.0 | 66.00 | S122 | 112MS4 | 30000 | 11200 |
| 21.5 | 1278 | 2.0 | 66.00 | S122 | 100LB4 | 30000 | 11200 |
| 21.4 | 1287 | 1.1 | 67.84 | S102 | 112MS4 | 22000 | 8953 |
| 21.3 | 1302 | 2.0 | 43.60 | S122 | 112MB6 | 30000 | 11200 |
| 20.9 | 1314 | 1.0 | 67.84 | S102 | 100LB4 | 22000 | 9000 |
| 20.6 | 1350 | 1.0 | 47.13 | S102 | 132S6 | 22000 | 9000 |
| 20.4 | 1364 | 1.0 | 47.13 | S102 | 132SA6 | 22000 | 9000 |
| 20.4 | 1320 | 1.7 | 71.07 | S123 | 112MS4 | 30000 | 11200 |
| 20.0 | 1348 | 1.7 | 71.07 | S123 | 100LB4 | 30000 | 11200 |
| 19.8 | 1404 | 1.5 | 49.04 | S122 | 132S6 | 30000 | 11200 |
| 19.6 | 1419 | 1.4 | 49.04 | S122 | 132SA6 | 30000 | 11200 |
| 19.0 | 1465 | 1.4 | 49.04 | S122 | 112MB6 | 30000 | 11200 |
| 18.0 | 1539 | 1.4 | 53.75 | S122 | 132S6 | 30000 | 11200 |
| 17.9 | 1555 | 1.4 | 53.75 | S122 | 132SA6 | 30000 | 11200 |
| 17.3 | 1606 | 1.4 | 53.75 | S122 | 112MB6 | 30000 | 11200 |
| 16.6 | 1621 | 1.6 | 87.27 | S123 | 112MS4 | 30000 | 11200 |
| 16.3 | 1655 | 1.5 | 87.27 | S123 | 100LB4 | 30000 | 11200 |
| 14.7 | 1890 | 1.4 | 66.00 | S122 | 132S6 | 30000 | 11200 |
| 14.5 | 1910 | 1.3 | 66.00 | S122 | 132SA6 | 30000 | 11200 |
| 14.1 | 1971 | 1.3 | 66.00 | S122 | 112MB6 | 30000 | 11200 |
| 13.6 | 1993 | 1.2 | 71.07 | S123 | 132S6 | 30000 | 11200 |
| 13.5 | 2014 | 1.1 | 71.07 | S123 | 132SA6 | 30000 | 11200 |
| 13.1 | 2079 | 1.1 | 71.07 | S123 | 112MB6 | 30000 | 11200 |
| 12.9 | 2090 | 1.2 | 112.52 | S123 | 112MS4 | 30000 | 11200 |
| 12.6 | 2134 | 1.2 | 112.52 | S123 | 100LB4 | 30000 | 11200 |
| 11.8 | 2291 | 1.1 | 123.33 | S123 | 112MS4 | 30000 | 11200 |
| 11.5 | 2339 | 1.1 | 123.33 | S123 | 100LB4 | 30000 | 11200 |
| 11.1 | 2447 | 1.0 | 87.27 | S123 | 132S6 | 30000 | 11200 |
| 11.0 | 2473 | 1.0 | 87.27 | S123 | 132SA6 | 30000 | 11200 |
| 10.8 | 2485 | 1.0 | 133.78 | S123 | 112MS4 | 30000 | 11200 |

# 5.1 S MOTORREDUCTORES (50Hz)



## 3.00 kW

| n2 [rpm] | M2 [Nm] | fs | i | Reductor | Motor | Fr2 D [N] | Fr2 C-L [N] |
|---|---|---|---|---|---|---|---|
| 10.7 | 2552 | 1.0 | 87.27 | S123 | 112MB6 | 30000 | 11200 |
| 10.6 | 2537 | 1.0 | 133.78 | S123 | 100LB4 | 30000 | 11200 |

## 4.00 kW

| n2 [rpm] | M2 [Nm] | fs | i | Reductor | Motor | Fr2 D [N] | Fr2 C-L [N] |
|---|---|---|---|---|---|---|---|
| 339.7 | 104 | Ex | 8.63 | S052 | 112M2 | 2814 | 2814 |
| 336.2 | 105 | Ex | 8.63 | S052 | 112MA2 | 2820 | 2820 |
| 332.8 | 106 | Ex | 8.63 | S052 | 100LB2 | 2825 | 2825 |
| 197.6 | 186 | 2.1 | 7.34 | S082 | 112M4 | 13068 | 3734 |
| 196.2 | 187 | 2.1 | 7.34 | S082 | 112MA4 | 13095 | 3741 |
| 181.3 | 202 | 1.2 | 8.00 | S062 | 112M4 | 5950 | 2380 |
| 180.0 | 204 | 1.2 | 8.00 | S062 | 112MA4 | 5958 | 2383 |
| 179.8 | 204 | 2.1 | 8.06 | S082 | 112M4 | 13439 | 3840 |
| 178.6 | 205 | 2.1 | 8.06 | S082 | 112MA4 | 13467 | 3848 |
| 169.4 | 209 | Ex | 17.29 | S082 | 112M2 | 13704 | 3915 |
| 167.7 | 211 | Ex | 17.29 | S082 | 112MA2 | 13746 | 3927 |
| 165.9 | 213 | Ex | 17.29 | S082 | 100LB2 | 13788 | 3939 |
| 162.8 | 225 | 2.9 | 8.85 | S102 | 112MA4 | 17159 | 4903 |
| 151.9 | 241 | 1.1 | 9.55 | S062 | 112M4 | 6137 | 2455 |
| 150.9 | 243 | 1.1 | 9.55 | S062 | 112MA4 | 6144 | 2458 |
| 149.9 | 236 | Ex | 19.55 | S062 | 112M2 | 6205 | 2482 |
| 148.3 | 239 | Ex | 19.55 | S062 | 112MA2 | 6215 | 2486 |
| 146.8 | 241 | Ex | 19.55 | S062 | 100LB2 | 6226 | 2490 |
| 145.8 | 251 | 1.9 | 9.94 | S082 | 112M4 | 14294 | 4084 |
| 145.5 | 243 | Ex | 20.14 | S082 | 112M2 | 14332 | 4095 |
| 144.8 | 253 | 1.9 | 9.94 | S082 | 112MA4 | 14323 | 4092 |
| 144.0 | 246 | Ex | 20.14 | S082 | 112MA2 | 14376 | 4107 |
| 142.5 | 248 | Ex | 20.14 | S082 | 100LB2 | 14419 | 4120 |
| 133.2 | 275 | 2.5 | 10.88 | S102 | 112M4 | 18243 | 5212 |
| 132.4 | 267 | Ex | 22.13 | S082 | 112M2 | 14731 | 4209 |
| 132.3 | 277 | 2.5 | 10.88 | S102 | 112MA4 | 18281 | 5223 |
| 131.1 | 270 | Ex | 22.13 | S082 | 112MA2 | 14775 | 4221 |
| 130.8 | 283 | 1.4 | 7.34 | S082 | 132MA6 | 14742 | 4212 |
| 129.7 | 273 | Ex | 22.13 | S082 | 100LB2 | 14819 | 4234 |
| 126.4 | 280 | Ex | 23.18 | S062 | 112M2 | 6372 | 2549 |
| 125.1 | 283 | Ex | 23.18 | S062 | 112MA2 | 6381 | 2552 |
| 124.9 | 294 | 1.7 | 11.61 | S082 | 112M4 | 14947 | 4271 |
| 124.1 | 296 | 1.7 | 11.61 | S082 | 112MA4 | 14977 | 4279 |
| 123.8 | 286 | Ex | 23.18 | S062 | 100LB2 | 6391 | 2556 |
| 122.1 | 290 | Ex | 24.00 | S082 | 112M2 | 15081 | 4309 |
| 120.8 | 293 | Ex | 24.00 | S082 | 112MA2 | 15125 | 4322 |
| 119.6 | 296 | Ex | 24.00 | S082 | 100LB2 | 15171 | 4334 |
| 119.1 | 311 | 1.4 | 8.06 | S082 | 132MA6 | 15144 | 4327 |

# 5.1 S MOTORREDUCTORES (50Hz)



## 4.00 kW

| n2 [rpm] | M2 [Nm] | fs | i | Reductor | Motor | Fr2 D [N] | Fr2 C-L [N] |
|---|---|---|---|---|---|---|---|
| 119.1 | 311 | 2.0 | 8.06 | S102 | 132MA6 | 18865 | 5390 |
| 116.5 | 304 | Ex | 25.14 | S062 | 112M2 | 6443 | 2577 |
| 115.3 | 307 | Ex | 25.14 | S062 | 112MA2 | 6452 | 2581 |
| 114.1 | 310 | Ex | 25.14 | S062 | 100LB2 | 6460 | 2584 |
| 113.7 | 322 | 1.7 | 12.75 | S082 | 112M4 | 15353 | 4387 |
| 113.7 | 322 | 2.2 | 12.75 | S102 | 112M4 | 19136 | 5467 |
| 112.9 | 325 | 1.7 | 12.75 | S082 | 112MA4 | 15384 | 4395 |
| 112.9 | 325 | 2.2 | 12.75 | S102 | 112MA4 | 19176 | 5479 |
| 108.5 | 341 | 1.9 | 8.85 | S102 | 132MA6 | 19398 | 5542 |
| 107.4 | 330 | Ex | 27.29 | S082 | 112M2 | 15644 | 4470 |
| 106.3 | 333 | Ex | 27.29 | S082 | 112MA2 | 15690 | 4483 |
| 105.2 | 336 | Ex | 27.29 | S082 | 100LB2 | 15736 | 4496 |
| 103.6 | 354 | 2.4 | 13.99 | S102 | 112M4 | 19676 | 5622 |
| 102.9 | 356 | 2.4 | 13.99 | S102 | 112MA4 | 19716 | 5633 |
| 102.2 | 346 | Ex | 28.67 | S082 | 112M2 | 15865 | 4533 |
| 101.1 | 350 | Ex | 28.67 | S082 | 112MA2 | 15911 | 4546 |
| 100.1 | 354 | Ex | 28.67 | S082 | 100LB2 | 15958 | 4559 |
| 96.5 | 384 | 1.2 | 9.94 | S082 | 132MA6 | 16064 | 4590 |
| 92.2 | 384 | Ex | 31.78 | S082 | 112M2 | 16328 | 4665 |
| 91.3 | 388 | Ex | 31.78 | S082 | 112MA2 | 16375 | 4679 |
| 90.3 | 392 | Ex | 31.78 | S082 | 100LB2 | 16422 | 4692 |
| 88.2 | 420 | 1.6 | 10.88 | S102 | 132MA6 | 20631 | 5894 |
| 84.2 | 435 | 2.2 | 17.21 | S102 | 112M4 | 20922 | 5978 |
| 83.9 | 422 | Ex | 34.91 | S082 | 112M2 | 16758 | 4788 |
| 83.8 | 437 | 1.3 | 17.29 | S082 | 112M4 | 16713 | 4775 |
| 83.7 | 438 | 2.1 | 17.21 | S102 | 112MA4 | 20965 | 5990 |
| 83.3 | 440 | 1.3 | 17.29 | S082 | 112MA4 | 16744 | 4784 |
| 83.1 | 426 | Ex | 34.91 | S082 | 112MA2 | 16806 | 4802 |
| 82.7 | 448 | 1.1 | 11.61 | S082 | 132MA6 | 16760 | 4789 |
| 82.2 | 430 | Ex | 34.91 | S082 | 100LB2 | 16854 | 4815 |
| 76.3 | 481 | 2.1 | 19.00 | S102 | 112M4 | 21536 | 6153 |
| 75.8 | 484 | 2.1 | 19.00 | S102 | 112MA4 | 21579 | 6166 |
| 75.3 | 492 | 1.1 | 12.75 | S082 | 132MA6 | 17189 | 4911 |
| 75.3 | 492 | 1.5 | 12.75 | S102 | 132MA6 | 21608 | 6174 |
| 73.2 | 484 | Ex | 40.05 | S082 | 112M2 | 17396 | 4970 |
| 72.4 | 489 | Ex | 40.05 | S082 | 112MA2 | 17444 | 4984 |
| 72.0 | 509 | 1.1 | 20.14 | S082 | 112M4 | 17412 | 4975 |
| 71.7 | 494 | Ex | 40.05 | S082 | 100LB2 | 17493 | 4998 |
| 71.5 | 513 | 1.1 | 20.14 | S082 | 112MA4 | 17444 | 4984 |
| 68.6 | 540 | 1.6 | 13.99 | S102 | 132MA6 | 22000 | 6342 |
| 68.1 | 520 | Ex | 43.05 | S082 | 112M2 | 17735 | 5067 |
| 67.4 | 525 | Ex | 43.05 | S082 | 112MA2 | 17784 | 5081 |
| 66.7 | 531 | Ex | 43.05 | S082 | 100LB2 | 17833 | 5095 |
| 65.5 | 560 | 1.0 | 22.13 | S082 | 112M4 | 17848 | 5100 |
| 65.5 | 560 | 1.8 | 22.13 | S102 | 112M4 | 22000 | 6430 |

# 5.1 S MOTORREDUCTORES (50Hz)



## 4.00 kW

| n2 [rpm] | M2 [Nm] | fs | i | Reductor | Motor | Fr2 D [N] | Fr2 C-L [N] |
|---|---|---|---|---|---|---|---|
| 65.1 | 563 | 1.0 | 22.13 | S082 | 112MA4 | 17881 | 5109 |
| 65.1 | 563 | 1.8 | 22.13 | S102 | 112MA4 | 22000 | 6443 |
| 59.7 | 614 | 1.8 | 24.28 | S102 | 112M4 | 22000 | 6602 |
| 59.3 | 618 | 1.7 | 24.28 | S102 | 112MA4 | 22000 | 6615 |
| 58.3 | 607 | Ex | 50.25 | S082 | 112M2 | 18000 | 5276 |
| 57.7 | 613 | Ex | 50.25 | S082 | 112MA2 | 18000 | 5290 |
| 57.1 | 620 | Ex | 50.25 | S082 | 100LB2 | 18000 | 5304 |
| 55.8 | 664 | 1.4 | 17.21 | S102 | 132MA6 | 22000 | 6727 |
| 55.1 | 666 | 1.6 | 26.33 | S102 | 112M4 | 22000 | 6756 |
| 54.7 | 671 | 1.6 | 26.33 | S102 | 112MA4 | 22000 | 6769 |
| 54.0 | 655 | Ex | 54.27 | S082 | 112M2 | 18000 | 5381 |
| 53.4 | 662 | Ex | 54.27 | S082 | 112MA2 | 18000 | 5395 |
| 52.9 | 669 | Ex | 54.27 | S082 | 100LB2 | 18000 | 5409 |
| 50.5 | 733 | 1.4 | 19.00 | S102 | 132MA6 | 22000 | 6915 |
| 48.5 | 755 | 1.4 | 29.87 | S102 | 112M4 | 22000 | 6997 |
| 48.2 | 761 | 1.4 | 29.87 | S102 | 112MA4 | 22000 | 7011 |
| 47.5 | 772 | 3.3 | 30.51 | S122 | 112M4 | 30000 | 10053 |
| 47.2 | 777 | 3.3 | 30.51 | S122 | 112MA4 | 30000 | 10072 |
| 45.6 | 804 | 1.1 | 31.78 | S082 | 112M4 | 18000 | 5584 |
| 45.3 | 809 | 1.1 | 31.78 | S082 | 112MA4 | 18000 | 5593 |
| 45.2 | 820 | 2.5 | 21.25 | S122 | 132MA6 | 30000 | 10184 |
| 44.8 | 819 | 1.6 | 32.40 | S102 | 112M4 | 22000 | 7155 |
| 44.4 | 825 | 1.6 | 32.40 | S102 | 112MA4 | 22000 | 7169 |
| 43.4 | 854 | 1.2 | 22.13 | S102 | 132MA6 | 22000 | 7210 |
| 43.4 | 846 | 3.0 | 33.44 | S122 | 112M4 | 30000 | 10308 |
| 43.1 | 852 | 3.0 | 33.44 | S122 | 112MA4 | 30000 | 10327 |
| 41.5 | 883 | 1.4 | 34.91 | S102 | 112M4 | 22000 | 7302 |
| 41.3 | 889 | 1.3 | 34.91 | S102 | 112MA4 | 22000 | 7316 |
| 41.2 | 899 | 2.3 | 23.29 | S122 | 132MA6 | 30000 | 10439 |
| 41.2 | 890 | 2.9 | 35.20 | S122 | 112M4 | 30000 | 10451 |
| 40.9 | 896 | 2.9 | 35.20 | S122 | 112MA4 | 30000 | 10470 |
| 39.5 | 937 | 1.2 | 24.28 | S102 | 132MA6 | 22000 | 7392 |
| 37.9 | 969 | 1.3 | 38.30 | S102 | 112M4 | 22000 | 7486 |
| 37.6 | 975 | 1.3 | 38.30 | S102 | 112MA4 | 22000 | 7499 |
| 36.7 | 1009 | 2.1 | 26.15 | S122 | 132MA6 | 30000 | 10765 |
| 36.5 | 1016 | 1.1 | 26.33 | S102 | 132MA6 | 22000 | 7553 |
| 35.3 | 1039 | 2.5 | 41.07 | S122 | 112M4 | 30000 | 10886 |
| 35.1 | 1046 | 2.4 | 41.07 | S122 | 112MA4 | 30000 | 10905 |
| 33.6 | 1103 | 2.0 | 28.60 | S122 | 132MA6 | 30000 | 11018 |
| 33.3 | 1103 | 2.3 | 43.60 | S122 | 112M4 | 30000 | 11056 |
| 33.0 | 1110 | 2.3 | 43.60 | S122 | 112MA4 | 30000 | 11075 |
| 31.5 | 1177 | 2.2 | 30.51 | S122 | 132MA6 | 30000 | 11200 |
| 30.8 | 1192 | 1.1 | 47.13 | S102 | 112M4 | 22000 | 7901 |
| 30.6 | 1200 | 1.1 | 47.13 | S102 | 112MA4 | 22000 | 7915 |
| 29.6 | 1250 | 1.0 | 32.40 | S102 | 132MA6 | 22000 | 7968 |

# 5.1 S MOTORREDUCTORES (50Hz)



## 4.00 kW

| n2 [rpm] | M2 [Nm] | fs | i | Reductor | Motor | Fr2 D [N] | Fr2 C-L [N] |
|---|---|---|---|---|---|---|---|
| 29.6 | 1240 | 1.7 | 49.04 | S122 | 112M4 | 30000 | 11200 |
| 29.4 | 1249 | 1.6 | 49.04 | S122 | 112MA4 | 30000 | 11200 |
| 28.7 | 1290 | 2.0 | 33.44 | S122 | 132MA6 | 30000 | 11200 |
| 27.3 | 1358 | 1.9 | 35.20 | S122 | 132MA6 | 30000 | 11200 |
| 27.0 | 1359 | 1.6 | 53.75 | S122 | 112M4 | 30000 | 11200 |
| 26.8 | 1369 | 1.6 | 53.75 | S122 | 112MA4 | 30000 | 11200 |
| 23.4 | 1584 | 1.6 | 41.07 | S122 | 132MA6 | 30000 | 11200 |
| 22.0 | 1682 | 1.5 | 43.60 | S122 | 132MA6 | 30000 | 11200 |
| 22.0 | 1669 | 1.5 | 66.00 | S122 | 112M4 | 30000 | 11200 |
| 21.8 | 1681 | 1.5 | 66.00 | S122 | 112MA4 | 30000 | 11200 |
| 20.4 | 1760 | 1.3 | 71.07 | S123 | 112M4 | 30000 | 11200 |
| 20.3 | 1772 | 1.3 | 71.07 | S123 | 112MA4 | 30000 | 11200 |
| 19.6 | 1892 | 1.1 | 49.04 | S122 | 132MA6 | 30000 | 11200 |
| 17.9 | 2074 | 1.1 | 53.75 | S122 | 132MA6 | 30000 | 11200 |
| 16.6 | 2161 | 1.2 | 87.27 | S123 | 112M4 | 30000 | 11200 |
| 16.5 | 2176 | 1.2 | 87.27 | S123 | 112MA4 | 30000 | 11200 |
| 14.5 | 2546 | 1.0 | 66.00 | S122 | 132MA6 | 30000 | 11200 |

## 4.80 kW

| n2 [rpm] | M2 [Nm] | fs | i | Reductor | Motor | Fr2 D [N] | Fr2 C-L [N] |
|---|---|---|---|---|---|---|---|
| 194.9 | 226 | 1.8 | 7.34 | S082 | 112MB4 | 12999 | 3714 |
| 177.4 | 248 | 1.7 | 8.06 | S082 | 112MB4 | 13359 | 3817 |
| 177.4 | 248 | 2.5 | 8.06 | S102 | 112MB4 | 16604 | 4744 |
| 161.6 | 272 | 2.4 | 8.85 | S102 | 112MB4 | 17078 | 4879 |
| 143.8 | 306 | 1.5 | 9.94 | S082 | 112MB4 | 14184 | 4053 |
| 131.4 | 335 | 2.0 | 10.88 | S102 | 112MB4 | 18175 | 5193 |
| 123.2 | 357 | 1.4 | 11.61 | S082 | 112MB4 | 14811 | 4232 |
| 112.2 | 392 | 1.4 | 12.75 | S082 | 112MB4 | 15199 | 4343 |
| 112.2 | 392 | 1.8 | 12.75 | S102 | 112MB4 | 19046 | 5442 |
| 102.2 | 431 | 2.0 | 13.99 | S102 | 112MB4 | 19571 | 5592 |
| 83.1 | 530 | 1.8 | 17.21 | S102 | 112MB4 | 20779 | 5937 |
| 82.7 | 532 | 1.0 | 17.29 | S082 | 112MB4 | 16485 | 4710 |
| 75.3 | 585 | 1.7 | 19.00 | S102 | 112MB4 | 21370 | 6106 |
| 64.6 | 681 | 1.5 | 22.13 | S102 | 112MB4 | 22000 | 6371 |
| 58.9 | 747 | 1.4 | 24.28 | S102 | 112MB4 | 22000 | 6536 |
| 54.7 | 805 | 2.7 | 26.15 | S122 | 112MB4 | 30000 | 9525 |
| 54.3 | 810 | 1.3 | 26.33 | S102 | 112MB4 | 22000 | 6682 |
| 50.0 | 880 | 2.5 | 28.60 | S122 | 112MB4 | 30000 | 9755 |
| 47.9 | 919 | 1.2 | 29.87 | S102 | 112MB4 | 22000 | 6911 |
| 46.9 | 939 | 2.7 | 30.51 | S122 | 112MB4 | 30000 | 9922 |
| 44.1 | 997 | 1.3 | 32.40 | S102 | 112MB4 | 22000 | 7059 |
| 42.8 | 1029 | 2.5 | 33.44 | S122 | 112MB4 | 30000 | 10161 |
| 41.0 | 1074 | 1.1 | 34.91 | S102 | 112MB4 | 22000 | 7197 |

# 5.1 S MOTORREDUCTORES (50Hz)



## 4.80 kW

| n2 [rpm] | M2 [Nm] | fs | i | Reductor | Motor | Fr2 D [N] | Fr2 C-L [N] |
|---|---|---|---|---|---|---|---|
| 40.6 | 1083 | 2.4 | 35.20 | S122 | 112MB4 | 30000 | 10294 |
| 37.3 | 1179 | 1.1 | 38.30 | S102 | 112MB4 | 22000 | 7368 |
| 34.8 | 1264 | 2.0 | 41.07 | S122 | 112MB4 | 30000 | 10697 |
| 32.8 | 1342 | 1.9 | 43.60 | S122 | 112MB4 | 30000 | 10853 |
| 29.2 | 1509 | 1.4 | 49.04 | S122 | 112MB4 | 30000 | 11159 |
| 26.6 | 1654 | 1.3 | 53.75 | S122 | 112MB4 | 30000 | 11200 |
| 21.7 | 2031 | 1.3 | 66.00 | S122 | 112MB4 | 30000 | 11200 |
| 20.1 | 2142 | 1.1 | 71.07 | S123 | 112MB4 | 30000 | 11200 |

## 5.50 kW

| n2 [rpm] | M2 [Nm] | fs | i | Reductor | Motor | Fr2 D [N] | Fr2 C-L [N] |
|---|---|---|---|---|---|---|---|
| 200.3 | 252 | 1.6 | 7.34 | S082 | 132MS4 | 12789 | 3654 |
| 197.6 | 255 | 1.6 | 7.34 | S082 | 132S4 | 12840 | 3668 |
| 182.3 | 277 | 1.6 | 8.06 | S082 | 132MS4 | 13137 | 3753 |
| 182.3 | 277 | 2.2 | 8.06 | S102 | 132MS4 | 16374 | 4678 |
| 179.8 | 280 | 1.5 | 8.06 | S082 | 132S4 | 13188 | 3768 |
| 179.8 | 280 | 2.2 | 8.06 | S102 | 132S4 | 16442 | 4698 |
| 170.6 | 285 | Ex | 17.29 | S082 | 132S2 | 13421 | 3834 |
| 168.3 | 289 | Ex | 17.29 | S082 | 112MB2 | 13472 | 3849 |
| 168.3 | 289 | Ex | 17.29 | S082 | 132SA2 | 13472 | 3849 |
| 166.2 | 303 | 2.1 | 8.85 | S102 | 132MS4 | 16836 | 4810 |
| 163.9 | 308 | 2.1 | 8.85 | S102 | 132S4 | 16905 | 4830 |
| 147.8 | 341 | 1.4 | 9.94 | S082 | 132MS4 | 13931 | 3980 |
| 146.5 | 332 | Ex | 20.14 | S082 | 132S2 | 14006 | 4002 |
| 145.8 | 346 | 1.4 | 9.94 | S082 | 132S4 | 13984 | 3995 |
| 144.5 | 337 | Ex | 20.14 | S082 | 112MB2 | 14059 | 4017 |
| 144.5 | 337 | Ex | 20.14 | S082 | 132SA2 | 14059 | 4017 |
| 135.1 | 373 | 1.8 | 10.88 | S102 | 132MS4 | 17902 | 5115 |
| 133.3 | 365 | Ex | 22.13 | S082 | 132S2 | 14375 | 4107 |
| 133.2 | 379 | 1.8 | 10.88 | S102 | 132S4 | 17975 | 5136 |
| 131.5 | 370 | Ex | 22.13 | S082 | 112MB2 | 14428 | 4122 |
| 131.5 | 370 | Ex | 22.13 | S082 | 132SA2 | 14428 | 4122 |
| 130.8 | 389 | 1.0 | 7.34 | S082 | 132MB6 | 14393 | 4112 |
| 126.7 | 398 | 1.3 | 11.61 | S082 | 132MS4 | 14532 | 4152 |
| 124.9 | 404 | 1.3 | 11.61 | S082 | 132S4 | 14585 | 4167 |
| 122.9 | 396 | Ex | 24.00 | S082 | 132S2 | 14697 | 4199 |
| 121.3 | 401 | Ex | 24.00 | S082 | 112MB2 | 14751 | 4215 |
| 121.3 | 401 | Ex | 24.00 | S082 | 132SA2 | 14751 | 4215 |
| 119.1 | 428 | 1.0 | 8.06 | S082 | 132MB6 | 14761 | 4217 |
| 119.1 | 428 | 1.4 | 8.06 | S102 | 132MB6 | 18562 | 5304 |
| 115.3 | 437 | 1.2 | 12.75 | S082 | 132MS4 | 14902 | 4258 |
| 115.3 | 437 | 1.6 | 12.75 | S102 | 132MS4 | 18748 | 5357 |
| 113.7 | 443 | 1.2 | 12.75 | S082 | 132S4 | 14956 | 4273 |

# 5.1 S MOTORREDUCTORES (50Hz)



## 5.50 kW

| n2 [rpm] | M2 [Nm] | fs | i | Reductor | Motor | Fr2 D [N] | Fr2 C-L [N] |
|---|---|---|---|---|---|---|---|
| 113.7 | 443 | 1.6 | 12.75 | S102 | 132S4 | 18822 | 5378 |
| 108.5 | 469 | 1.4 | 8.85 | S102 | 132MB6 | 19066 | 5447 |
| 108.1 | 450 | Ex | 27.29 | S082 | 132S2 | 15211 | 4346 |
| 106.6 | 456 | Ex | 27.29 | S082 | 112MB2 | 15266 | 4362 |
| 106.6 | 456 | Ex | 27.29 | S082 | 132SA2 | 15266 | 4362 |
| 105.1 | 480 | 1.8 | 13.99 | S102 | 132MS4 | 19256 | 5502 |
| 103.6 | 486 | 1.8 | 13.99 | S102 | 132S4 | 19331 | 5523 |
| 102.9 | 473 | Ex | 28.67 | S082 | 132S2 | 15411 | 4403 |
| 101.5 | 479 | Ex | 28.67 | S082 | 112MB2 | 15466 | 4419 |
| 101.5 | 479 | Ex | 28.67 | S082 | 132SA2 | 15466 | 4419 |
| 92.8 | 524 | Ex | 31.78 | S082 | 132S2 | 15828 | 4522 |
| 91.6 | 531 | Ex | 31.78 | S082 | 112MB2 | 15883 | 4538 |
| 91.6 | 531 | Ex | 31.78 | S082 | 132SA2 | 15883 | 4538 |
| 88.2 | 577 | 1.2 | 10.88 | S102 | 132MB6 | 20222 | 5778 |
| 85.4 | 590 | 1.6 | 17.21 | S102 | 132MS4 | 20420 | 5834 |
| 84.5 | 576 | Ex | 34.91 | S082 | 132S2 | 16211 | 4632 |
| 84.2 | 599 | 1.6 | 17.21 | S102 | 132S4 | 20499 | 5857 |
| 83.4 | 584 | Ex | 34.91 | S082 | 112MB2 | 16267 | 4648 |
| 83.4 | 584 | Ex | 34.91 | S082 | 132SA2 | 16267 | 4648 |
| 77.4 | 652 | 1.5 | 19.00 | S102 | 132MS4 | 20989 | 5997 |
| 76.3 | 661 | 1.5 | 19.00 | S102 | 132S4 | 21068 | 6020 |
| 75.3 | 676 | 1.1 | 12.75 | S102 | 132MB6 | 21129 | 6037 |
| 72.7 | 670 | Ex | 40.05 | S082 | 112MB2 | 16828 | 4808 |
| 69.2 | 729 | 2.8 | 21.25 | S122 | 132MS4 | 30000 | 8831 |
| 68.6 | 742 | 1.2 | 13.99 | S102 | 132MB6 | 21670 | 6191 |
| 68.2 | 739 | 2.7 | 21.25 | S122 | 132S4 | 30000 | 8863 |
| 66.4 | 759 | 1.3 | 22.13 | S102 | 132MS4 | 21879 | 6251 |
| 65.5 | 769 | 1.3 | 22.13 | S102 | 132S4 | 21960 | 6274 |
| 63.1 | 799 | 2.6 | 23.29 | S122 | 132MS4 | 30000 | 9050 |
| 62.3 | 810 | 2.6 | 23.29 | S122 | 132S4 | 30000 | 9083 |
| 60.6 | 833 | 1.3 | 24.28 | S102 | 132MS4 | 22000 | 6408 |
| 59.7 | 844 | 1.3 | 24.28 | S102 | 132S4 | 22000 | 6432 |
| 56.2 | 897 | 2.4 | 26.15 | S122 | 132MS4 | 30000 | 9331 |
| 55.8 | 913 | 1.0 | 17.21 | S102 | 132MB6 | 22000 | 6542 |
| 55.8 | 903 | 1.2 | 26.33 | S102 | 132MS4 | 22000 | 6547 |
| 55.4 | 910 | 2.4 | 26.15 | S122 | 132S4 | 30000 | 9364 |
| 55.1 | 916 | 1.2 | 26.33 | S102 | 132S4 | 22000 | 6571 |
| 51.4 | 981 | 2.2 | 28.60 | S122 | 132MS4 | 30000 | 9548 |
| 50.7 | 995 | 2.2 | 28.60 | S122 | 132S4 | 30000 | 9582 |
| 50.5 | 1008 | 1.0 | 19.00 | S102 | 132MB6 | 22000 | 6711 |
| 49.2 | 1025 | 1.1 | 29.87 | S102 | 132MS4 | 22000 | 6764 |
| 48.5 | 1039 | 1.0 | 29.87 | S102 | 132S4 | 22000 | 6787 |
| 48.2 | 1047 | 2.4 | 30.51 | S122 | 132MS4 | 30000 | 9706 |
| 47.5 | 1061 | 2.4 | 30.51 | S122 | 132S4 | 30000 | 9740 |
| 45.4 | 1111 | 1.2 | 32.40 | S102 | 132MS4 | 22000 | 6904 |

# 5.1 S MOTORREDUCTORES (50Hz)



## 5.50 kW

| n2 [rpm] | M2 [Nm] | fs | i | Reductor | Motor | Fr2 D [N] | Fr2 C-L [N] |
|---|---|---|---|---|---|---|---|
| 45.2 | 1127 | 1.8 | 21.25 | S122 | 132MB6 | 30000 | 9852 |
| 44.8 | 1127 | 1.1 | 32.40 | S102 | 132S4 | 22000 | 6928 |
| 44.0 | 1147 | 2.2 | 33.44 | S122 | 132MS4 | 30000 | 9931 |
| 43.4 | 1163 | 2.2 | 33.44 | S122 | 132S4 | 30000 | 9964 |
| 41.8 | 1207 | 2.1 | 35.20 | S122 | 132MS4 | 30000 | 10056 |
| 41.2 | 1236 | 1.7 | 23.29 | S122 | 132MB6 | 30000 | 10075 |
| 41.2 | 1224 | 2.1 | 35.20 | S122 | 132S4 | 30000 | 10089 |
| 36.7 | 1387 | 1.6 | 26.15 | S122 | 132MB6 | 30000 | 10355 |
| 35.8 | 1409 | 1.8 | 41.07 | S122 | 132MS4 | 30000 | 10431 |
| 35.3 | 1428 | 1.8 | 41.07 | S122 | 132S4 | 30000 | 10464 |
| 33.7 | 1495 | 1.7 | 43.60 | S122 | 132MS4 | 30000 | 10575 |
| 33.6 | 1517 | 1.4 | 28.60 | S122 | 132MB6 | 30000 | 10570 |
| 33.3 | 1516 | 1.7 | 43.60 | S122 | 132S4 | 30000 | 10608 |
| 31.5 | 1619 | 1.6 | 30.51 | S122 | 132MB6 | 30000 | 10724 |
| 30.0 | 1682 | 1.2 | 49.04 | S122 | 132MS4 | 30000 | 10856 |
| 29.6 | 1705 | 1.2 | 49.04 | S122 | 132S4 | 30000 | 10888 |
| 28.7 | 1774 | 1.4 | 33.44 | S122 | 132MB6 | 30000 | 10939 |
| 27.3 | 1867 | 1.4 | 35.20 | S122 | 132MB6 | 30000 | 11057 |
| 27.3 | 1844 | 1.2 | 53.75 | S122 | 132MS4 | 30000 | 11071 |
| 27.0 | 1869 | 1.2 | 53.75 | S122 | 132S4 | 30000 | 11102 |
| 23.4 | 2179 | 1.2 | 41.07 | S122 | 132MB6 | 30000 | 11200 |
| 22.3 | 2264 | 1.1 | 66.00 | S122 | 132MS4 | 30000 | 11200 |
| 22.0 | 2295 | 1.1 | 66.00 | S122 | 132S4 | 30000 | 11200 |
| 22.0 | 2313 | 1.1 | 43.60 | S122 | 132MB6 | 30000 | 11200 |

## 7.50 kW

| n2 [rpm] | M2 [Nm] | fs | i | Reductor | Motor | Fr2 D [N] | Fr2 C-L [N] |
|---|---|---|---|---|---|---|---|
| 198.9 | 346 | 1.1 | 7.34 | S082 | 132M4 | 12511 | 3575 |
| 197.6 | 348 | 1.1 | 7.34 | S082 | 132MA4 | 12535 | 3581 |
| 181.1 | 380 | 1.1 | 8.06 | S082 | 132M4 | 12830 | 3666 |
| 181.1 | 380 | 1.6 | 8.06 | S102 | 132M4 | 16145 | 4613 |
| 179.8 | 382 | 1.1 | 8.06 | S082 | 132MA4 | 12853 | 3672 |
| 179.8 | 382 | 1.6 | 8.06 | S102 | 132MA4 | 16177 | 4622 |
| 170.6 | 389 | Ex | 17.29 | S082 | 132M2 | 13080 | 3737 |
| 168.3 | 394 | Ex | 17.29 | S082 | 132SB2 | 13127 | 3751 |
| 165.0 | 417 | 1.6 | 8.85 | S102 | 132M4 | 16582 | 4738 |
| 163.9 | 420 | 1.5 | 8.85 | S102 | 132MA4 | 16615 | 4747 |
| 146.8 | 468 | 1.0 | 9.94 | S082 | 132MA4 | 13547 | 3871 |
| 146.8 | 468 | 1.0 | 9.94 | S082 | 132M4 | 13547 | 3871 |
| 146.5 | 453 | Ex | 20.14 | S082 | 132M2 | 13609 | 3888 |
| 144.5 | 459 | Ex | 20.14 | S082 | 132SB2 | 13657 | 3902 |
| 134.1 | 513 | 1.3 | 10.88 | S102 | 132M4 | 17584 | 5024 |
| 133.3 | 498 | Ex | 22.13 | S082 | 132M2 | 13939 | 3982 |

# 5.1 S MOTORREDUCTORES (50Hz)



## 7.50 kW

| n2 [rpm] | M2 [Nm] | fs | i | Reductor | Motor | Fr2 D [N] | Fr2 C-L [N] |
|---|---|---|---|---|---|---|---|
| 133.2 | 516 | 1.3 | 10.88 | S102 | 132MA4 | 17617 | 5034 |
| 131.5 | 504 | Ex | 22.13 | S082 | 132SB2 | 13986 | 3996 |
| 122.9 | 540 | Ex | 24.00 | S082 | 132M2 | 14224 | 4064 |
| 121.3 | 547 | Ex | 24.00 | S082 | 132SB2 | 14272 | 4078 |
| 120.3 | 577 | 1.1 | 8.06 | S102 | 160M6 | 18107 | 5174 |
| 114.5 | 600 | 1.2 | 12.75 | S102 | 132M4 | 18369 | 5248 |
| 114.4 | 607 | 1.8 | 8.48 | S122 | 160M6 | 26221 | 7492 |
| 113.7 | 605 | 1.2 | 12.75 | S102 | 132MA4 | 18404 | 5258 |
| 109.6 | 633 | 1.0 | 8.85 | S102 | 160M6 | 18571 | 5306 |
| 104.4 | 659 | 1.3 | 13.99 | S102 | 132M4 | 18837 | 5382 |
| 104.3 | 666 | 1.8 | 9.30 | S122 | 160M6 | 26877 | 7679 |
| 103.6 | 663 | 1.3 | 13.99 | S102 | 132MA4 | 18872 | 5392 |
| 85.0 | 817 | 1.7 | 11.42 | S122 | 160M6 | 28363 | 8104 |
| 84.8 | 811 | 1.2 | 17.21 | S102 | 132M4 | 19898 | 5685 |
| 84.2 | 816 | 1.2 | 17.21 | S102 | 132MA4 | 19934 | 5695 |
| 76.8 | 895 | 1.1 | 19.00 | S102 | 132M4 | 20409 | 5831 |
| 76.8 | 904 | 1.8 | 12.63 | S122 | 160M6 | 29098 | 8314 |
| 76.3 | 901 | 1.1 | 19.00 | S102 | 132MA4 | 20445 | 5841 |
| 70.1 | 991 | 1.8 | 13.84 | S122 | 160M6 | 29769 | 8505 |
| 68.7 | 1001 | 2.0 | 21.25 | S122 | 132M4 | 29953 | 8558 |
| 68.2 | 1008 | 2.0 | 21.25 | S122 | 132MA4 | 30000 | 8572 |
| 62.7 | 1097 | 1.9 | 23.29 | S122 | 132M4 | 30000 | 8750 |
| 62.3 | 1105 | 1.9 | 23.29 | S122 | 132MA4 | 30000 | 8765 |
| 57.1 | 1217 | 1.5 | 16.99 | S122 | 160M6 | 30000 | 8932 |
| 55.8 | 1232 | 1.8 | 26.15 | S122 | 132M4 | 30000 | 8992 |
| 55.4 | 1240 | 1.7 | 26.15 | S122 | 132MA4 | 30000 | 9006 |
| 51.0 | 1347 | 1.6 | 28.60 | S122 | 132M4 | 30000 | 9176 |
| 50.7 | 1356 | 1.6 | 28.60 | S122 | 132MA4 | 30000 | 9190 |
| 47.8 | 1437 | 1.8 | 30.51 | S122 | 132M4 | 30000 | 9308 |
| 47.5 | 1447 | 1.8 | 30.51 | S122 | 132MA4 | 30000 | 9322 |
| 45.6 | 1521 | 1.3 | 21.25 | S122 | 160M6 | 30000 | 9387 |
| 43.7 | 1575 | 1.6 | 33.44 | S122 | 132M4 | 30000 | 9493 |
| 43.4 | 1586 | 1.6 | 33.44 | S122 | 132MA4 | 30000 | 9507 |
| 41.6 | 1668 | 1.3 | 23.29 | S122 | 160M6 | 30000 | 9568 |
| 41.5 | 1658 | 1.5 | 35.20 | S122 | 132M4 | 30000 | 9594 |
| 41.2 | 1669 | 1.5 | 35.20 | S122 | 132MA4 | 30000 | 9608 |
| 37.1 | 1872 | 1.2 | 26.15 | S122 | 160M6 | 30000 | 9790 |
| 35.6 | 1934 | 1.3 | 41.07 | S122 | 132M4 | 30000 | 9889 |
| 35.3 | 1947 | 1.3 | 41.07 | S122 | 132MA4 | 30000 | 9902 |
| 33.9 | 2048 | 1.1 | 28.60 | S122 | 160M6 | 30000 | 9954 |
| 33.5 | 2053 | 1.2 | 43.60 | S122 | 132M4 | 30000 | 9999 |
| 33.3 | 2067 | 1.2 | 43.60 | S122 | 132MA4 | 30000 | 10012 |
| 31.8 | 2185 | 1.2 | 30.51 | S122 | 160M6 | 30000 | 10069 |
| 29.0 | 2394 | 1.1 | 33.44 | S122 | 160M6 | 30000 | 10224 |
| 27.6 | 2520 | 1.0 | 35.20 | S122 | 160M6 | 30000 | 10306 |

# 5.1 S MOTORREDUCTORES (50Hz)



## 9.20 kW

| n2 [rpm] | M2 [Nm] | fs | i | Reductor | Motor | Fr2 D [N] | Fr2 C-L [N] |
|---|---|---|---|---|---|---|---|
| 179.8 | 469 | 1.3 | 8.06 | S102 | 132MB4 | 15952 | 4558 |
| 169.4 | 480 | Ex | 17.29 | S082 | 132M2 | 12812 | 3660 |
| 168.3 | 484 | Ex | 17.29 | S082 | 132MA2 | 12833 | 3667 |
| 163.9 | 515 | 1.3 | 8.85 | S102 | 132MB4 | 16368 | 4677 |
| 133.2 | 633 | 1.1 | 10.88 | S102 | 132MB4 | 17314 | 4947 |
| 103.6 | 814 | 1.1 | 13.99 | S102 | 132MB4 | 18482 | 5281 |
| 68.2 | 1236 | 1.6 | 21.25 | S122 | 132MB4 | 29138 | 8325 |
| 62.3 | 1355 | 1.5 | 23.29 | S122 | 132MB4 | 29728 | 8494 |
| 55.4 | 1521 | 1.4 | 26.15 | S122 | 132MB4 | 30000 | 8702 |
| 50.7 | 1664 | 1.3 | 28.60 | S122 | 132MB4 | 30000 | 8858 |
| 47.5 | 1775 | 1.4 | 30.51 | S122 | 132MB4 | 30000 | 8967 |
| 43.4 | 1945 | 1.3 | 33.44 | S122 | 132MB4 | 30000 | 9117 |
| 41.2 | 2048 | 1.3 | 35.20 | S122 | 132MB4 | 30000 | 9198 |
| 35.3 | 2389 | 1.1 | 41.07 | S122 | 132MB4 | 30000 | 9424 |
| 33.3 | 2536 | 1.0 | 43.60 | S122 | 132MB4 | 30000 | 9504 |

## 11.00 kW

| n2 [rpm] | M2 [Nm] | fs | i | Reductor | Motor | Fr2 D [N] | Fr2 C-L [N] |
|---|---|---|---|---|---|---|---|
| 182.9 | 551 | 1.1 | 8.06 | S102 | 160MA4 | 15642 | 4469 |
| 178.6 | 565 | 1.1 | 8.06 | S102 | 132MC4 | 15743 | 4498 |
| 178.6 | 565 | 1.1 | 8.06 | S102 | 160S4 | 15743 | 4498 |
| 173.9 | 580 | 1.9 | 8.48 | S122 | 160MA4 | 22641 | 6469 |
| 169.8 | 594 | 1.8 | 8.48 | S122 | 160S4 | 22785 | 6510 |
| 166.7 | 605 | 1.1 | 8.85 | S102 | 160MA4 | 16034 | 4581 |
| 162.8 | 620 | 1.0 | 8.85 | S102 | 132MC4 | 16136 | 4610 |
| 162.8 | 620 | 1.0 | 8.85 | S102 | 160S4 | 16136 | 4610 |
| 158.6 | 636 | 1.9 | 9.30 | S122 | 160MA4 | 23193 | 6627 |
| 154.9 | 651 | 1.9 | 9.30 | S122 | 160S4 | 23338 | 6668 |
| 129.2 | 781 | 1.8 | 11.42 | S122 | 160MA4 | 24439 | 6983 |
| 126.1 | 800 | 1.7 | 11.42 | S122 | 160S4 | 24585 | 7024 |
| 116.8 | 863 | 1.8 | 12.63 | S122 | 160MA4 | 25052 | 7158 |
| 114.4 | 891 | 1.2 | 8.48 | S122 | 160L6 | 25148 | 7185 |
| 114.1 | 884 | 1.8 | 12.63 | S122 | 160S4 | 25197 | 7199 |
| 106.6 | 946 | 1.8 | 13.84 | S122 | 160MA4 | 25608 | 7317 |
| 104.3 | 976 | 1.3 | 9.30 | S122 | 160L6 | 25700 | 7343 |
| 104.1 | 969 | 1.8 | 13.84 | S122 | 160S4 | 25753 | 7358 |
| 86.8 | 1162 | 1.6 | 16.99 | S122 | 160MA4 | 26837 | 7668 |
| 85.0 | 1199 | 1.1 | 11.42 | S122 | 160L6 | 26918 | 7691 |
| 84.7 | 1190 | 1.6 | 16.99 | S122 | 160S4 | 26979 | 7708 |
| 76.8 | 1326 | 1.2 | 12.63 | S122 | 160L6 | 27500 | 7857 |
| 70.1 | 1453 | 1.2 | 13.84 | S122 | 160L6 | 28017 | 8005 |
| 69.4 | 1453 | 1.4 | 21.25 | S122 | 160MA4 | 28127 | 8036 |
| 67.8 | 1488 | 1.4 | 21.25 | S122 | 132MC4 | 28260 | 8074 |

# 5.1 S MOTORREDUCTORES (50Hz)



## 11.00 kW

| n2 [rpm] | M2 [Nm] | fs | i | Reductor | Motor | Fr2 D [N] | Fr2 C-L [N] |
|---|---|---|---|---|---|---|---|
| 67.8 | 1488 | 1.4 | 21.25 | S122 | 160S4 | 28260 | 8074 |
| 63.3 | 1592 | 1.3 | 23.29 | S122 | 160MA4 | 28631 | 8180 |
| 61.8 | 1631 | 1.3 | 23.29 | S122 | 132MC4 | 28761 | 8217 |
| 61.8 | 1631 | 1.3 | 23.29 | S122 | 160S4 | 28761 | 8217 |
| 57.1 | 1784 | 1.1 | 16.99 | S122 | 160L6 | 29113 | 8318 |
| 56.4 | 1788 | 1.2 | 26.15 | S122 | 160MA4 | 29242 | 8355 |
| 55.1 | 1832 | 1.2 | 26.15 | S122 | 132MC4 | 29364 | 8390 |
| 55.1 | 1832 | 1.2 | 26.15 | S122 | 160S4 | 29364 | 8390 |
| 51.6 | 1955 | 1.1 | 28.60 | S122 | 160MA4 | 29687 | 8482 |
| 50.3 | 2003 | 1.1 | 28.60 | S122 | 132MC4 | 29802 | 8515 |
| 50.3 | 2003 | 1.1 | 28.60 | S122 | 160S4 | 29802 | 8515 |
| 48.3 | 2086 | 1.2 | 30.51 | S122 | 160MA4 | 29992 | 8569 |
| 47.2 | 2137 | 1.2 | 30.51 | S122 | 132MC4 | 30000 | 8600 |
| 47.2 | 2137 | 1.2 | 30.51 | S122 | 160S4 | 30000 | 8600 |
| 44.1 | 2287 | 1.1 | 33.44 | S122 | 160MA4 | 30000 | 8685 |
| 43.1 | 2342 | 1.1 | 33.44 | S122 | 132MC4 | 30000 | 8714 |
| 43.1 | 2342 | 1.1 | 33.44 | S122 | 160S4 | 30000 | 8714 |
| 41.9 | 2407 | 1.1 | 35.20 | S122 | 160MA4 | 30000 | 8745 |
| 40.9 | 2465 | 1.0 | 35.20 | S122 | 132MC4 | 30000 | 8772 |
| 40.9 | 2465 | 1.0 | 35.20 | S122 | 160S4 | 30000 | 8772 |

## 15.00 kW

| n2 [rpm] | M2 [Nm] | fs | i | Reductor | Motor | Fr2 D [N] | Fr2 C-L [N] |
|---|---|---|---|---|---|---|---|
| 173.9 | 791 | 1.4 | 8.48 | S122 | 160LA4 | 21842 | 6241 |
| 158.6 | 867 | 1.4 | 9.30 | S122 | 160LA4 | 22318 | 6376 |
| 129.2 | 1064 | 1.3 | 11.42 | S122 | 160LA4 | 23364 | 6675 |
| 116.8 | 1177 | 1.4 | 12.63 | S122 | 160LA4 | 23862 | 6818 |
| 106.6 | 1290 | 1.3 | 13.84 | S122 | 160LA4 | 24305 | 6944 |
| 86.8 | 1584 | 1.2 | 16.99 | S122 | 160LA4 | 25237 | 7211 |
| 69.4 | 1981 | 1.0 | 21.25 | S122 | 160LA4 | 26125 | 7464 |

## 18.50 kW

| n2 [rpm] | M2 [Nm] | fs | i | Reductor | Motor | Fr2 D [N] | Fr2 C-L [N] |
|---|---|---|---|---|---|---|---|
| 173.3 | 979 | 1.1 | 8.48 | S122 | 180M4 | 21158 | 6045 |
| 158.1 | 1073 | 1.1 | 9.30 | S122 | 180M4 | 21566 | 6162 |
| 128.8 | 1317 | 1.0 | 11.42 | S122 | 180M4 | 22437 | 6411 |
| 116.4 | 1457 | 1.1 | 12.63 | S122 | 180M4 | 22835 | 6524 |
| 106.2 | 1597 | 1.1 | 13.84 | S122 | 180M4 | 23176 | 6622 |

# 5.2 IS REDUCTOR - 1750 RPM



## IS052

| $Mn_2$ [Nm] | i | $Pn_1$ [kW] | n2 [rpm] | Fr1 [N] | Fr2 D [N] | Fr2 C-L [N] |
|---|---|---|---|---|---|---|
| 123 | 8.63 | 2.72 | 202.9 | 759 | 3125 | 3125 |
| 137 | 11.14 | 2.35 | 157.1 | 846 | 3373 | 3373 |
| 152 | 13.66 | 2.12 | 128.2 | 901 | 3570 | 3570 |
| 174 | 15.27 | 2.17 | 114.6 | 890 | 3584 | 3584 |
| 174 | 16.29 | 2.04 | 107.5 | 922 | 3689 | 3689 |
| 174 | 18.63 | 1.78 | 93.9 | 983 | 3916 | 3916 |
| 188 | 21.04 | 1.71 | 83.2 | 1000 | 4020 | 4020 |
| 188 | 24.07 | 1.49 | 72.7 | 1051 | 4267 | 4267 |
| 208 | 25.79 | 1.54 | 67.9 | 1037 | 4234 | 4234 |
| 208 | 27.81 | 1.43 | 62.9 | 1064 | 4381 | 4381 |
| 208 | 30.00 | 1.32 | 58.3 | 1089 | 4532 | 4532 |
| 256 | 32.55 | 1.50 | 53.8 | 1104 | 4644 | 4644 |
| 282 | 36.55 | 1.47 | 47.9 | 1110 | 4725 | 4725 |
| 298 | 39.90 | 1.43 | 43.9 | 1118 | 4808 | 4808 |
| 298 | 42.63 | 1.33 | 41.1 | 1137 | 4956 | 4956 |
| 298 | 47.20 | 1.21 | 37.1 | 1163 | 5191 | 5191 |
| 298 | 52.25 | 1.09 | 33.5 | 1186 | 5433 | 5433 |
| 298 | 57.86 | 0.98 | 30.2 | 1208 | 5685 | 5685 |
| 298 | 72.83 | 0.78 | 24.0 | 1249 | 6000 | 6000 |

## IS053

| $Mn_2$ [Nm] | i | $Pn_1$ [kW] | n2 [rpm] | Fr1 [N] | Fr2 D [N] | Fr2 C-L [N] |
|---|---|---|---|---|---|---|
| 300 | 74.20 | 0.79 | 23.6 | 1251 | 6000 | 6000 |
| 298 | 95.84 | 0.61 | 18.3 | 1286 | 6000 | 6000 |
| 296 | 117.48 | 0.49 | 14.9 | 1309 | 6000 | 6000 |
| 300 | 137.45 | 0.43 | 12.7 | 1323 | 6000 | 6000 |
| 300 | 177.55 | 0.33 | 9.9 | 1342 | 6000 | 6000 |
| 304 | 198.45 | 0.30 | 8.8 | 1348 | 6000 | 6000 |
| 298 | 217.64 | 0.27 | 8.0 | 1354 | 6000 | 6000 |
| 294 | 256.33 | 0.22 | 6.8 | 1362 | 6000 | 6000 |
| 292 | 314.21 | 0.18 | 5.6 | 1370 | 6000 | 6000 |

## IS062

| $Mn_2$ [Nm] | i | $Pn_1$ [kW] | n2 [rpm] | Fr1 [N] | Fr2 D [N] | Fr2 C-L [N] |
|---|---|---|---|---|---|---|
| 238 | 8.00 | 5.68 | 218.8 | 413 | 4832 | 1933 |
| 260 | 9.55 | 5.20 | 183.3 | 499 | 5061 | 2024 |
| 282 | 11.71 | 4.60 | 149.5 | 605 | 5385 | 2154 |
| 302 | 13.36 | 4.32 | 131.0 | 650 | 5548 | 2219 |
| 324 | 15.94 | 3.88 | 109.8 | 727 | 5853 | 2341 |
| 332 | 19.55 | 3.24 | 89.5 | 841 | 6388 | 2555 |
| 338 | 23.18 | 2.78 | 75.5 | 920 | 6856 | 2742 |

# 5.2 IS REDUCTOR - 1750 RPM



## IS062

| $Mn_2$ [Nm] | i | $Pn_1$ [kW] | n2 [rpm] | Fr1 [N] | Fr2 D [N] | Fr2 C-L [N] |
|---|---|---|---|---|---|---|
| 346 | 25.14 | 2.63 | 69.6 | 948 | 7059 | 2824 |
| 346 | 27.66 | 2.39 | 63.3 | 990 | 7376 | 2950 |
| 360 | 30.00 | 2.29 | 58.3 | 1007 | 7536 | 3014 |
| 510 | 36.57 | 2.66 | 47.9 | 1013 | 7650 | 3060 |
| 510 | 39.38 | 2.47 | 44.4 | 1041 | 7927 | 3171 |
| 510 | 43.64 | 2.23 | 40.1 | 1077 | 8324 | 3329 |
| 510 | 46.10 | 2.11 | 38.0 | 1095 | 8541 | 3416 |
| 510 | 53.53 | 1.82 | 32.7 | 1138 | 9154 | 3661 |
| 510 | 55.00 | 1.77 | 31.8 | 1146 | 9268 | 3707 |
| 510 | 67.47 | 1.44 | 25.9 | 1194 | 10000 | 4000 |

## IS063

| $Mn_2$ [Nm] | i | $Pn_1$ [kW] | n2 [rpm] | Fr1 [N] | Fr2 D [N] | Fr2 C-L [N] |
|---|---|---|---|---|---|---|
| 510 | 81.43 | 1.22 | 21.5 | 1231 | 10000 | 4000 |
| 510 | 99.89 | 1.00 | 17.5 | 1264 | 10000 | 4000 |
| 510 | 126.43 | 0.79 | 13.8 | 1294 | 10000 | 4000 |
| 510 | 150.85 | 0.66 | 11.6 | 1313 | 10000 | 4000 |
| 515 | 185.05 | 0.54 | 9.5 | 1331 | 10000 | 4000 |
| 510 | 217.79 | 0.46 | 8.0 | 1342 | 10000 | 4000 |
| 510 | 267.16 | 0.37 | 6.5 | 1355 | 10000 | 4000 |

## IS082

| $Mn_2$ [Nm] | i | $Pn_1$ [kW] | n2 [rpm] | Fr1 [N] | Fr2 D [N] | Fr2 C-L [N] |
|---|---|---|---|---|---|---|
| 396 | 7.34 | 10.30 | 238.4 | 1365 | 11156 | 3188 |
| 432 | 8.06 | 10.23 | 217.1 | 1376 | 11407 | 3259 |
| 470 | 9.94 | 9.02 | 176.0 | 1572 | 12203 | 3487 |
| 505 | 11.61 | 8.31 | 150.8 | 1681 | 12792 | 3655 |
| 540 | 12.75 | 8.08 | 137.2 | 1714 | 13109 | 3745 |
| 555 | 17.29 | 6.13 | 101.2 | 2023 | 14680 | 4194 |
| 555 | 20.14 | 5.26 | 86.9 | 2159 | 15559 | 4445 |
| 575 | 22.13 | 4.96 | 79.1 | 2204 | 16032 | 4580 |
| 575 | 24.00 | 4.57 | 72.9 | 2265 | 16535 | 4724 |
| 650 | 27.29 | 4.55 | 64.1 | 2273 | 17049 | 4871 |
| 650 | 28.67 | 4.33 | 61.0 | 2308 | 17375 | 4964 |
| 850 | 31.78 | 5.11 | 55.1 | 2306 | 17762 | 5075 |
| 850 | 34.91 | 4.65 | 50.1 | 2367 | 18000 | 5263 |
| 850 | 40.05 | 4.05 | 43.7 | 2447 | 18000 | 5548 |
| 850 | 43.05 | 3.77 | 40.6 | 2484 | 18000 | 5703 |
| 850 | 50.25 | 3.23 | 34.8 | 2556 | 18000 | 6047 |
| 850 | 54.27 | 2.99 | 32.2 | 2588 | 18000 | 6226 |
| 850 | 61.98 | 2.62 | 28.2 | 2638 | 18000 | 6544 |

# 5.2 IS REDUCTOR - 1750 RPM



## IS083

| $Mn_2$ [Nm] | i | $Pn_1$ [kW] | n2 [rpm] | Fr1 [N] | Fr2 D [N] | Fr2 C-L [N] |
|---|---|---|---|---|---|---|
| 850 | 67.52 | 2.45 | 25.9 | 2667 | 18000 | 6757 |
| 850 | 74.18 | 2.23 | 23.6 | 2695 | 18000 | 6998 |
| 850 | 91.49 | 1.81 | 19.1 | 2750 | 18000 | 7200 |
| 850 | 117.17 | 1.41 | 14.9 | 2802 | 18000 | 7200 |
| 850 | 128.73 | 1.29 | 13.6 | 2819 | 18000 | 7200 |
| 850 | 158.76 | 1.04 | 11.0 | 2851 | 18000 | 7200 |
| 850 | 184.88 | 0.90 | 9.5 | 2870 | 18000 | 7200 |
| 855 | 203.11 | 0.82 | 8.6 | 2881 | 18000 | 7200 |
| 850 | 250.50 | 0.66 | 7.0 | 2901 | 18000 | 7200 |
| 845 | 292.36 | 0.56 | 6.0 | 2913 | 18000 | 7200 |
| 845 | 315.73 | 0.52 | 5.5 | 2919 | 18000 | 7200 |
| 845 | 360.58 | 0.46 | 4.8 | 2927 | 18000 | 7200 |

## IS102

| $Mn_2$ [Nm] | i | $Pn_1$ [kW] | n2 [rpm] | Fr1 [N] | Fr2 D [N] | Fr2 C-L [N] |
|---|---|---|---|---|---|---|
| 610 | 8.06 | 14.44 | 217.1 | 788 | 14063 | 4018 |
| 650 | 8.85 | 14.03 | 197.8 | 865 | 14442 | 4126 |
| 685 | 10.88 | 12.01 | 160.8 | 1166 | 15499 | 4428 |
| 720 | 12.75 | 10.78 | 137.2 | 1351 | 16332 | 4666 |
| 865 | 13.99 | 11.80 | 125.1 | 1198 | 16427 | 4694 |
| 940 | 17.21 | 10.42 | 101.7 | 1412 | 17554 | 5015 |
| 1010 | 19.00 | 10.15 | 92.1 | 1450 | 17997 | 5142 |
| 1010 | 22.13 | 8.71 | 79.1 | 1668 | 19100 | 5457 |
| 1080 | 24.28 | 8.49 | 72.1 | 1699 | 19556 | 5588 |
| 1080 | 26.33 | 7.83 | 66.5 | 1800 | 20188 | 5768 |
| 1080 | 29.87 | 6.90 | 58.6 | 1940 | 21200 | 6057 |
| 1280 | 32.40 | 7.54 | 54.0 | 2022 | 21877 | 6250 |
| 1195 | 34.91 | 6.53 | 50.1 | 2152 | 22000 | 6502 |
| 1280 | 38.30 | 6.38 | 45.7 | 2171 | 22000 | 6665 |
| 1110 | 44.00 | 4.82 | 39.8 | 2372 | 22000 | 7165 |
| 1365 | 47.13 | 5.53 | 37.1 | 2280 | 22000 | 7141 |
| 1110 | 55.14 | 3.84 | 31.7 | 2497 | 22000 | 7789 |
| 1365 | 59.40 | 4.39 | 29.5 | 2426 | 22000 | 7796 |
| 1365 | 67.84 | 3.84 | 25.8 | 2496 | 22000 | 8196 |

## IS103

| $Mn_2$ [Nm] | i | $Pn_1$ [kW] | n2 [rpm] | Fr1 [N] | Fr2 D [N] | Fr2 C-L [N] |
|---|---|---|---|---|---|---|
| 1365 | 74.18 | 3.59 | 23.6 | 2539 | 22000 | 8474 |
| 1365 | 81.39 | 3.27 | 21.5 | 2578 | 22000 | 8773 |
| 1365 | 100.15 | 2.66 | 17.5 | 2655 | 22000 | 9000 |
| 1365 | 110.55 | 2.41 | 15.8 | 2687 | 22000 | 9000 |

# 5.2 IS REDUCTOR - 1750 RPM



## IS103

| $Mn_2$ [Nm] | i | $Pn_1$ [kW] | n2 [rpm] | Fr1 [N] | Fr2 D [N] | Fr2 C-L [N] |
|---|---|---|---|---|---|---|
| 1365 | 128.73 | 2.07 | 13.6 | 2729 | 22000 | 9000 |
| 1365 | 141.24 | 1.88 | 12.4 | 2752 | 22000 | 9000 |
| 1370 | 173.78 | 1.54 | 10.1 | 2797 | 22000 | 9000 |
| 1365 | 203.11 | 1.31 | 8.6 | 2824 | 22000 | 9000 |
| 1365 | 222.85 | 1.19 | 7.8 | 2839 | 22000 | 9000 |
| 1365 | 274.20 | 0.97 | 6.4 | 2867 | 22000 | 9000 |
| 1370 | 320.79 | 0.83 | 5.5 | 2885 | 22000 | 9000 |
| 1360 | 345.60 | 0.77 | 5.1 | 2892 | 22000 | 9000 |
| 1360 | 394.69 | 0.67 | 4.4 | 2904 | 22000 | 9000 |

## IS122

| $Mn_2$ [Nm] | i | $Pn_1$ [kW] | n2 [rpm] | Fr1 [N] | Fr2 D [N] | Fr2 C-L [N] |
|---|---|---|---|---|---|---|
| 1080 | 8.48 | 24.30 | 206.3 | 3012 | 18134 | 5181 |
| 1225 | 9.30 | 25.15 | 188.2 | 2979 | 18143 | 5184 |
| 1370 | 11.42 | 22.91 | 153.3 | 3068 | 19127 | 5465 |
| 1590 | 12.63 | 24.04 | 138.6 | 3026 | 18934 | 5410 |
| 1735 | 13.84 | 23.93 | 126.5 | 3030 | 19045 | 5441 |
| 1880 | 16.99 | 21.12 | 103.0 | 3140 | 20267 | 5791 |
| 2020 | 21.25 | 18.14 | 82.3 | 3255 | 21815 | 6233 |
| 2095 | 23.29 | 17.17 | 75.1 | 3294 | 22436 | 6410 |
| 2165 | 26.15 | 15.80 | 66.9 | 3347 | 23357 | 6674 |
| 2165 | 28.60 | 14.45 | 61.2 | 3400 | 24377 | 6965 |
| 2560 | 30.51 | 16.01 | 57.4 | 3435 | 25134 | 7181 |
| 2560 | 33.44 | 14.61 | 52.3 | 3482 | 26235 | 7496 |
| 2560 | 35.20 | 13.88 | 49.7 | 3506 | 26863 | 7675 |
| 2560 | 41.07 | 11.90 | 42.6 | 3571 | 28822 | 8235 |
| 2560 | 43.60 | 11.21 | 40.1 | 3594 | 29610 | 8460 |
| 2050 | 49.04 | 7.98 | 35.7 | 3702 | 30000 | 9526 |
| 2220 | 53.75 | 7.88 | 32.6 | 3705 | 30000 | 9690 |
| 2560 | 66.00 | 7.40 | 26.5 | 3720 | 30000 | 10148 |

## IS123

| $Mn_2$ [Nm] | i | $Pn_1$ [kW] | n2 [rpm] | Fr1 [N] | Fr2 D [N] | Fr2 C-L [N] |
|---|---|---|---|---|---|---|
| 2305 | 71.07 | 6.32 | 24.6 | 3761 | 30000 | 10780 |
| 2560 | 87.27 | 5.72 | 20.1 | 3780 | 30000 | 11200 |
| 2560 | 112.52 | 4.44 | 15.6 | 3822 | 30000 | 11200 |
| 2560 | 123.33 | 4.05 | 14.2 | 3834 | 30000 | 11200 |
| 2565 | 133.78 | 3.74 | 13.1 | 3845 | 30000 | 11200 |
| 2560 | 151.43 | 3.30 | 11.6 | 3859 | 30000 | 11200 |
| 2565 | 177.53 | 2.82 | 9.9 | 3874 | 30000 | 11200 |
| 2555 | 194.59 | 2.56 | 9.0 | 3882 | 30000 | 11200 |

# 5.2 IS REDUCTOR - 1750 RPM



## IS123

| $Mn_2$ [Nm] | i | $Pn_1$ [kW] | n2 [rpm] | Fr1 [N] | Fr2 D [N] | Fr2 C-L [N] |
|---|---|---|---|---|---|---|
| 2565 | 238.93 | 2.09 | 7.3 | 3898 | 30000 | 11200 |

# 5.3 IS REDUCTOR - 1400 RPM



## IS052

| $Mn_2$ [Nm] | i | $Pn_1$ [kW] | n2 [rpm] | Fr1 [N] | Fr2 D [N] | Fr2 C-L [N] |
|---|---|---|---|---|---|---|
| 123 | 8.63 | 2.18 | 162.3 | 718 | 3375 | 3375 |
| 137 | 11.14 | 1.88 | 125.7 | 810 | 3644 | 3644 |
| 152 | 13.66 | 1.70 | 102.5 | 869 | 3857 | 3857 |
| 174 | 15.27 | 1.74 | 91.7 | 857 | 3874 | 3874 |
| 174 | 16.29 | 1.63 | 86.0 | 891 | 3987 | 3987 |
| 174 | 18.63 | 1.43 | 75.1 | 956 | 4231 | 4231 |
| 188 | 21.04 | 1.36 | 66.5 | 974 | 4345 | 4345 |
| 188 | 24.07 | 1.19 | 58.2 | 1029 | 4611 | 4611 |
| 208 | 25.79 | 1.23 | 54.3 | 1013 | 4578 | 4578 |
| 208 | 27.81 | 1.14 | 50.3 | 1042 | 4736 | 4736 |
| 208 | 30.00 | 1.06 | 46.7 | 1069 | 4898 | 4898 |
| 256 | 32.55 | 1.20 | 43.0 | 1084 | 5020 | 5020 |
| 282 | 36.55 | 1.18 | 38.3 | 1091 | 5109 | 5109 |
| 298 | 39.90 | 1.14 | 35.1 | 1100 | 5200 | 5200 |
| 298 | 42.63 | 1.07 | 32.8 | 1119 | 5359 | 5359 |
| 298 | 47.20 | 0.96 | 29.7 | 1147 | 5612 | 5612 |
| 298 | 52.25 | 0.87 | 26.8 | 1172 | 5873 | 5873 |
| 298 | 57.86 | 0.79 | 24.2 | 1195 | 6000 | 6000 |
| 298 | 72.83 | 0.62 | 19.2 | 1238 | 6000 | 6000 |

## IS053

| $Mn_2$ [Nm] | i | $Pn_1$ [kW] | n2 [rpm] | Fr1 [N] | Fr2 D [N] | Fr2 C-L [N] |
|---|---|---|---|---|---|---|
| 300 | 74.20 | 0.63 | 18.9 | 1242 | 6000 | 6000 |
| 298 | 95.84 | 0.48 | 14.6 | 1279 | 6000 | 6000 |
| 296 | 117.48 | 0.39 | 11.9 | 1302 | 6000 | 6000 |
| 300 | 137.45 | 0.34 | 10.2 | 1317 | 6000 | 6000 |
| 300 | 177.55 | 0.26 | 7.9 | 1338 | 6000 | 6000 |
| 304 | 198.45 | 0.24 | 7.0 | 1345 | 6000 | 6000 |
| 298 | 217.64 | 0.21 | 6.4 | 1350 | 6000 | 6000 |
| 294 | 256.33 | 0.18 | 5.5 | 1359 | 6000 | 6000 |
| 292 | 314.21 | 0.14 | 4.5 | 1367 | 6000 | 6000 |

## IS062

| $Mn_2$ [Nm] | i | $Pn_1$ [kW] | n2 [rpm] | Fr1 [N] | Fr2 D [N] | Fr2 C-L [N] |
|---|---|---|---|---|---|---|
| 238 | 8.00 | 4.54 | 175.0 | 350 | 5225 | 2090 |
| 260 | 9.55 | 4.16 | 146.7 | 441 | 5474 | 2190 |
| 282 | 11.71 | 3.68 | 119.6 | 554 | 5825 | 2330 |
| 302 | 13.36 | 3.45 | 104.8 | 602 | 6004 | 2401 |
| 324 | 15.94 | 3.10 | 87.8 | 684 | 6334 | 2533 |
| 332 | 19.55 | 2.59 | 71.6 | 805 | 6911 | 2764 |
| 338 | 23.18 | 2.23 | 60.4 | 888 | 7415 | 2966 |

# 5.3 IS REDUCTOR - 1400 RPM



## IS062

| $Mn_2$ [Nm] | i | $Pn_1$ [kW] | n2 [rpm] | Fr1 [N] | Fr2 D [N] | Fr2 C-L [N] |
|---|---|---|---|---|---|---|
| 346 | 25.14 | 2.10 | 55.7 | 919 | 7635 | 3054 |
| 346 | 27.66 | 1.91 | 50.6 | 963 | 7976 | 3190 |
| 360 | 30.00 | 1.83 | 46.7 | 981 | 8149 | 3260 |
| 510 | 36.57 | 2.13 | 38.3 | 988 | 8280 | 3312 |
| 510 | 39.38 | 1.98 | 35.6 | 1018 | 8578 | 3431 |
| 510 | 43.64 | 1.78 | 32.1 | 1056 | 9005 | 3602 |
| 510 | 46.10 | 1.69 | 30.4 | 1075 | 9239 | 3695 |
| 510 | 53.53 | 1.45 | 26.1 | 1121 | 9898 | 3959 |
| 510 | 55.00 | 1.42 | 25.4 | 1129 | 10000 | 4000 |
| 510 | 67.47 | 1.15 | 20.8 | 1181 | 10000 | 4000 |

## IS063

| $Mn_2$ [Nm] | i | $Pn_1$ [kW] | n2 [rpm] | Fr1 [N] | Fr2 D [N] | Fr2 C-L [N] |
|---|---|---|---|---|---|---|
| 510 | 81.43 | 0.98 | 17.2 | 1220 | 10000 | 4000 |
| 510 | 99.89 | 0.80 | 14.0 | 1255 | 10000 | 4000 |
| 510 | 126.43 | 0.63 | 11.1 | 1287 | 10000 | 4000 |
| 510 | 150.85 | 0.53 | 9.3 | 1307 | 10000 | 4000 |
| 515 | 185.05 | 0.43 | 7.6 | 1326 | 10000 | 4000 |
| 510 | 217.79 | 0.37 | 6.4 | 1338 | 10000 | 4000 |
| 510 | 267.16 | 0.30 | 5.2 | 1351 | 10000 | 4000 |

## IS082

| $Mn_2$ [Nm] | i | $Pn_1$ [kW] | n2 [rpm] | Fr1 [N] | Fr2 D [N] | Fr2 C-L [N] |
|---|---|---|---|---|---|---|
| 396 | 7.34 | 8.24 | 190.8 | 1261 | 12030 | 3437 |
| 432 | 8.06 | 8.18 | 173.6 | 1273 | 12302 | 3515 |
| 470 | 9.94 | 7.22 | 140.8 | 1482 | 13161 | 3760 |
| 505 | 11.61 | 6.64 | 120.6 | 1598 | 13797 | 3942 |
| 540 | 12.75 | 6.47 | 109.8 | 1632 | 14140 | 4040 |
| 555 | 17.29 | 4.90 | 81.0 | 1962 | 15832 | 4523 |
| 555 | 20.14 | 4.21 | 69.5 | 2107 | 16778 | 4794 |
| 575 | 22.13 | 3.97 | 63.3 | 2154 | 17288 | 4939 |
| 575 | 24.00 | 3.66 | 58.3 | 2219 | 17830 | 5094 |
| 650 | 27.29 | 3.64 | 51.3 | 2228 | 18000 | 5253 |
| 650 | 28.67 | 3.46 | 48.8 | 2264 | 18000 | 5354 |
| 850 | 31.78 | 4.08 | 44.1 | 2262 | 18000 | 5474 |
| 850 | 34.91 | 3.72 | 40.1 | 2327 | 18000 | 5676 |
| 850 | 40.05 | 3.24 | 35.0 | 2412 | 18000 | 5983 |
| 850 | 43.05 | 3.01 | 32.5 | 2452 | 18000 | 6150 |
| 850 | 50.25 | 2.58 | 27.9 | 2529 | 18000 | 6521 |
| 850 | 54.27 | 2.39 | 25.8 | 2563 | 18000 | 6712 |
| 850 | 61.98 | 2.09 | 22.6 | 2616 | 18000 | 7055 |

# 5.3 IS REDUCTOR - 1400 RPM



## IS083

| $Mn_2$ [Nm] | i | $Pn_1$ [kW] | n2 [rpm] | Fr1 [N] | Fr2 D [N] | Fr2 C-L [N] |
|---|---|---|---|---|---|---|
| 850 | 67.52 | 1.96 | 20.7 | 2646 | 18000 | 7200 |
| 850 | 74.18 | 1.79 | 18.9 | 2677 | 18000 | 7200 |
| 850 | 91.49 | 1.45 | 15.3 | 2735 | 18000 | 7200 |
| 850 | 117.17 | 1.13 | 11.9 | 2791 | 18000 | 7200 |
| 850 | 128.73 | 1.03 | 10.9 | 2808 | 18000 | 7200 |
| 850 | 158.76 | 0.83 | 8.8 | 2842 | 18000 | 7200 |
| 850 | 184.88 | 0.72 | 7.6 | 2863 | 18000 | 7200 |
| 855 | 203.11 | 0.66 | 6.9 | 2874 | 18000 | 7200 |
| 850 | 250.50 | 0.53 | 5.6 | 2895 | 18000 | 7200 |
| 845 | 292.36 | 0.45 | 4.8 | 2908 | 18000 | 7200 |
| 845 | 315.73 | 0.42 | 4.4 | 2914 | 18000 | 7200 |
| 845 | 360.58 | 0.37 | 3.9 | 2923 | 18000 | 7200 |

## IS102

| $Mn_2$ [Nm] | i | $Pn_1$ [kW] | n2 [rpm] | Fr1 [N] | Fr2 D [N] | Fr2 C-L [N] |
|---|---|---|---|---|---|---|
| 610 | 8.06 | 11.55 | 173.6 | 647 | 15163 | 4332 |
| 650 | 8.85 | 11.22 | 158.3 | 729 | 15574 | 4450 |
| 685 | 10.88 | 9.61 | 128.6 | 1050 | 16712 | 4775 |
| 720 | 12.75 | 8.62 | 109.8 | 1247 | 17610 | 5032 |
| 865 | 13.99 | 9.44 | 100.1 | 1084 | 17719 | 5063 |
| 940 | 17.21 | 8.34 | 81.3 | 1311 | 18935 | 5410 |
| 1010 | 19.00 | 8.12 | 73.7 | 1352 | 19415 | 5547 |
| 1010 | 22.13 | 6.97 | 63.3 | 1583 | 20603 | 5886 |
| 1080 | 24.28 | 6.79 | 57.7 | 1616 | 21097 | 6028 |
| 1080 | 26.33 | 6.26 | 53.2 | 1724 | 21777 | 6222 |
| 1080 | 29.87 | 5.52 | 46.9 | 1873 | 22000 | 6533 |
| 1280 | 32.40 | 6.03 | 43.2 | 1961 | 22000 | 6741 |
| 1195 | 34.91 | 5.23 | 40.1 | 2098 | 22000 | 7011 |
| 1280 | 38.30 | 5.10 | 36.5 | 2119 | 22000 | 7187 |
| 1110 | 44.00 | 3.85 | 31.8 | 2333 | 22000 | 7724 |
| 1365 | 47.13 | 4.42 | 29.7 | 2235 | 22000 | 7701 |
| 1110 | 55.14 | 3.07 | 25.4 | 2465 | 22000 | 8396 |
| 1365 | 59.40 | 3.51 | 23.6 | 2391 | 22000 | 8406 |
| 1365 | 67.84 | 3.07 | 20.6 | 2465 | 22000 | 8836 |

## IS103

| $Mn_2$ [Nm] | i | $Pn_1$ [kW] | n2 [rpm] | Fr1 [N] | Fr2 D [N] | Fr2 C-L [N] |
|---|---|---|---|---|---|---|
| 1365 | 74.18 | 2.87 | 18.9 | 2510 | 22000 | 9000 |
| 1365 | 81.39 | 2.62 | 17.2 | 2552 | 22000 | 9000 |
| 1365 | 100.15 | 2.13 | 14.0 | 2634 | 22000 | 9000 |
| 1365 | 110.55 | 1.93 | 12.7 | 2667 | 22000 | 9000 |

# 5.3 IS REDUCTOR - 1400 RPM



## IS103

| $Mn_2$ [Nm] | i | $Pn_1$ [kW] | n2 [rpm] | Fr1 [N] | Fr2 D [N] | Fr2 C-L [N] |
|---|---|---|---|---|---|---|
| 1365 | 128.73 | 1.65 | 10.9 | 2713 | 22000 | 9000 |
| 1365 | 141.24 | 1.51 | 9.9 | 2737 | 22000 | 9000 |
| 1370 | 173.78 | 1.23 | 8.1 | 2784 | 22000 | 9000 |
| 1365 | 203.11 | 1.05 | 6.9 | 2814 | 22000 | 9000 |
| 1365 | 222.85 | 0.96 | 6.3 | 2829 | 22000 | 9000 |
| 1365 | 274.20 | 0.78 | 5.1 | 2859 | 22000 | 9000 |
| 1370 | 320.79 | 0.67 | 4.4 | 2878 | 22000 | 9000 |
| 1360 | 345.60 | 0.61 | 4.0 | 2886 | 22000 | 9000 |
| 1360 | 394.69 | 0.54 | 3.5 | 2899 | 22000 | 9000 |

## IS122

| $Mn_2$ [Nm] | i | $Pn_1$ [kW] | n2 [rpm] | Fr1 [N] | Fr2 D [N] | Fr2 C-L [N] |
|---|---|---|---|---|---|---|
| 1080 | 8.48 | 19.44 | 165.1 | 2951 | 19587 | 5596 |
| 1225 | 9.30 | 20.12 | 150.6 | 2916 | 19606 | 5602 |
| 1370 | 11.42 | 18.33 | 122.6 | 3010 | 20674 | 5907 |
| 1590 | 12.63 | 19.23 | 110.9 | 2966 | 20480 | 5851 |
| 1735 | 13.84 | 19.14 | 101.2 | 2970 | 20608 | 5888 |
| 1880 | 16.99 | 16.89 | 82.4 | 3087 | 21932 | 6266 |
| 2020 | 21.25 | 14.52 | 65.9 | 3209 | 23608 | 6745 |
| 2095 | 23.29 | 13.74 | 60.1 | 3251 | 24280 | 6937 |
| 2165 | 26.15 | 12.64 | 53.5 | 3307 | 25277 | 7222 |
| 2165 | 28.60 | 11.56 | 49.0 | 3364 | 26374 | 7535 |
| 2560 | 30.51 | 12.81 | 45.9 | 3401 | 27189 | 7768 |
| 2560 | 33.44 | 11.69 | 41.9 | 3451 | 28374 | 8107 |
| 2560 | 35.20 | 11.11 | 39.8 | 3476 | 29050 | 8300 |
| 2560 | 41.07 | 9.52 | 34.1 | 3546 | 30000 | 8903 |
| 2560 | 43.60 | 8.97 | 32.1 | 3571 | 30000 | 9145 |
| 2050 | 49.04 | 6.38 | 28.6 | 3685 | 30000 | 10285 |
| 2220 | 53.75 | 6.31 | 26.1 | 3688 | 30000 | 10464 |
| 2560 | 66.00 | 5.92 | 21.2 | 3705 | 30000 | 10962 |

## IS123

| $Mn_2$ [Nm] | i | $Pn_1$ [kW] | n2 [rpm] | Fr1 [N] | Fr2 D [N] | Fr2 C-L [N] |
|---|---|---|---|---|---|---|
| 2305 | 71.07 | 5.06 | 19.7 | 3748 | 30000 | 11200 |
| 2560 | 87.27 | 4.57 | 16.0 | 3768 | 30000 | 11200 |
| 2560 | 112.52 | 3.55 | 12.4 | 3813 | 30000 | 11200 |
| 2560 | 123.33 | 3.24 | 11.3 | 3826 | 30000 | 11200 |
| 2565 | 133.78 | 2.99 | 10.5 | 3837 | 30000 | 11200 |
| 2560 | 151.43 | 2.64 | 9.2 | 3852 | 30000 | 11200 |
| 2565 | 177.53 | 2.25 | 7.9 | 3869 | 30000 | 11200 |
| 2555 | 194.59 | 2.05 | 7.2 | 3877 | 30000 | 11200 |

# 5.3 IS REDUCTOR - 1400 RPM



## IS123

| $Mn_2$ [Nm] | i | $Pn_1$ [kW] | n2 [rpm] | Fr1 [N] | Fr2 D [N] | Fr2 C-L [N] |
|---|---|---|---|---|---|---|
| 2565 | 238.93 | 1.67 | 5.9 | 3894 | 30000 | 11200 |

# 5.4 IS REDUCTOR - 1140 RPM



## IS052

| $Mn_2$ [Nm] | i | $Pn_1$ [kW] | n2 [rpm] | Fr1 [N] | Fr2 D [N] | Fr2 C-L [N] |
|---|---|---|---|---|---|---|
| 123 | 8.63 | 1.77 | 132.2 | 700 | 3657 | 3657 |
| 137 | 11.14 | 1.53 | 102.3 | 795 | 3949 | 3949 |
| 152 | 13.66 | 1.38 | 83.5 | 855 | 4183 | 4183 |
| 174 | 15.27 | 1.42 | 74.6 | 843 | 4209 | 4209 |
| 174 | 16.29 | 1.33 | 70.0 | 878 | 4330 | 4330 |
| 174 | 18.63 | 1.16 | 61.2 | 945 | 4591 | 4591 |
| 188 | 21.04 | 1.11 | 54.2 | 964 | 4718 | 4718 |
| 188 | 24.07 | 0.97 | 47.4 | 1019 | 5003 | 5003 |
| 208 | 25.79 | 1.00 | 44.2 | 1003 | 4975 | 4975 |
| 208 | 27.81 | 0.93 | 41.0 | 1033 | 5144 | 5144 |
| 208 | 30.00 | 0.86 | 38.0 | 1060 | 5318 | 5318 |
| 256 | 32.55 | 0.98 | 35.0 | 1076 | 5451 | 5451 |
| 282 | 36.55 | 0.96 | 31.2 | 1083 | 5554 | 5554 |
| 298 | 39.90 | 0.93 | 28.6 | 1092 | 5656 | 5656 |
| 298 | 42.63 | 0.87 | 26.7 | 1112 | 5827 | 5827 |
| 298 | 47.20 | 0.78 | 24.1 | 1141 | 6000 | 6000 |
| 298 | 52.25 | 0.71 | 21.8 | 1166 | 6000 | 6000 |
| 298 | 57.86 | 0.64 | 19.7 | 1190 | 6000 | 6000 |
| 298 | 72.83 | 0.51 | 15.7 | 1234 | 6000 | 6000 |

## IS053

| $Mn_2$ [Nm] | i | $Pn_1$ [kW] | n2 [rpm] | Fr1 [N] | Fr2 D [N] | Fr2 C-L [N] |
|---|---|---|---|---|---|---|
| 300 | 74.20 | 0.51 | 15.4 | 1237 | 6000 | 6000 |
| 298 | 95.84 | 0.39 | 11.9 | 1276 | 6000 | 6000 |
| 296 | 117.48 | 0.32 | 9.7 | 1300 | 6000 | 6000 |
| 300 | 137.45 | 0.28 | 8.3 | 1315 | 6000 | 6000 |
| 300 | 177.55 | 0.21 | 6.4 | 1336 | 6000 | 6000 |
| 304 | 198.45 | 0.19 | 5.7 | 1343 | 6000 | 6000 |
| 298 | 217.64 | 0.17 | 5.2 | 1349 | 6000 | 6000 |
| 294 | 256.33 | 0.15 | 4.5 | 1357 | 6000 | 6000 |
| 292 | 314.21 | 0.12 | 3.6 | 1367 | 6000 | 6000 |

## IS062

| $Mn_2$ [Nm] | i | $Pn_1$ [kW] | n2 [rpm] | Fr1 [N] | Fr2 D [N] | Fr2 C-L [N] |
|---|---|---|---|---|---|---|
| 238 | 8.00 | 3.70 | 142.5 | 323 | 5686 | 2275 |
| 260 | 9.55 | 3.39 | 119.4 | 416 | 5962 | 2385 |
| 282 | 11.71 | 2.99 | 97.4 | 532 | 6346 | 2538 |
| 302 | 13.36 | 2.81 | 85.3 | 581 | 6545 | 2618 |
| 324 | 15.94 | 2.53 | 71.5 | 666 | 6907 | 2763 |
| 332 | 19.55 | 2.11 | 58.3 | 790 | 7527 | 3011 |
| 338 | 23.18 | 1.81 | 49.2 | 875 | 8070 | 3228 |

# 5.4 IS REDUCTOR - 1140 RPM



## IS062

| $Mn_2$ [Nm] | i | $Pn_1$ [kW] | n2 [rpm] | Fr1 [N] | Fr2 D [N] | Fr2 C-L [N] |
|---|---|---|---|---|---|---|
| 346 | 25.14 | 1.71 | 45.3 | 906 | 8308 | 3323 |
| 346 | 27.66 | 1.56 | 41.2 | 952 | 8673 | 3469 |
| 360 | 30.00 | 1.49 | 38.0 | 970 | 8864 | 3545 |
| 510 | 36.57 | 1.73 | 31.2 | 977 | 9032 | 3613 |
| 510 | 39.38 | 1.61 | 28.9 | 1008 | 9351 | 3740 |
| 510 | 43.64 | 1.45 | 26.1 | 1047 | 9808 | 3923 |
| 510 | 46.10 | 1.38 | 24.7 | 1066 | 10000 | 4000 |
| 510 | 53.53 | 1.18 | 21.3 | 1114 | 10000 | 4000 |
| 510 | 55.00 | 1.15 | 20.7 | 1122 | 10000 | 4000 |
| 510 | 67.47 | 0.94 | 16.9 | 1175 | 10000 | 4000 |

## IS063

| $Mn_2$ [Nm] | i | $Pn_1$ [kW] | n2 [rpm] | Fr1 [N] | Fr2 D [N] | Fr2 C-L [N] |
|---|---|---|---|---|---|---|
| 510 | 81.43 | 0.80 | 14.0 | 1215 | 10000 | 4000 |
| 510 | 99.89 | 0.65 | 11.4 | 1251 | 10000 | 4000 |
| 510 | 126.43 | 0.51 | 9.0 | 1284 | 10000 | 4000 |
| 510 | 150.85 | 0.43 | 7.6 | 1304 | 10000 | 4000 |
| 515 | 185.05 | 0.35 | 6.2 | 1324 | 10000 | 4000 |
| 510 | 217.79 | 0.30 | 5.2 | 1336 | 10000 | 4000 |
| 510 | 267.16 | 0.24 | 4.3 | 1350 | 10000 | 4000 |

## IS082

| $Mn_2$ [Nm] | i | $Pn_1$ [kW] | n2 [rpm] | Fr1 [N] | Fr2 D [N] | Fr2 C-L [N] |
|---|---|---|---|---|---|---|
| 396 | 7.34 | 6.71 | 155.3 | 1218 | 12956 | 3702 |
| 432 | 8.06 | 6.66 | 141.4 | 1230 | 13254 | 3787 |
| 470 | 9.94 | 5.88 | 114.6 | 1444 | 14180 | 4052 |
| 505 | 11.61 | 5.41 | 98.2 | 1563 | 14869 | 4248 |
| 540 | 12.75 | 5.27 | 89.4 | 1599 | 15243 | 4355 |
| 555 | 17.29 | 3.99 | 65.9 | 1936 | 17056 | 4873 |
| 555 | 20.14 | 3.43 | 56.6 | 2085 | 18000 | 5163 |
| 575 | 22.13 | 3.23 | 51.5 | 2134 | 18000 | 5320 |
| 575 | 24.00 | 2.98 | 47.5 | 2200 | 18000 | 5485 |
| 650 | 27.29 | 2.96 | 41.8 | 2209 | 18000 | 5660 |
| 650 | 28.67 | 2.82 | 39.8 | 2246 | 18000 | 5767 |
| 850 | 31.78 | 3.33 | 35.9 | 2244 | 18000 | 5900 |
| 850 | 34.91 | 3.03 | 32.7 | 2311 | 18000 | 6116 |
| 850 | 40.05 | 2.64 | 28.5 | 2398 | 18000 | 6445 |
| 850 | 43.05 | 2.45 | 26.5 | 2439 | 18000 | 6624 |
| 850 | 50.25 | 2.10 | 22.7 | 2517 | 18000 | 7020 |
| 850 | 54.27 | 1.95 | 21.0 | 2552 | 18000 | 7200 |
| 850 | 61.98 | 1.71 | 18.4 | 2606 | 18000 | 7200 |

# 5.4 IS REDUCTOR - 1140 RPM



## IS083

| $Mn_2$ [Nm] | i | $Pn_1$ [kW] | n2 [rpm] | Fr1 [N] | Fr2 D [N] | Fr2 C-L [N] |
|---|---|---|---|---|---|---|
| 850 | 67.52 | 1.60 | 16.9 | 2638 | 18000 | 7200 |
| 850 | 74.18 | 1.46 | 15.4 | 2669 | 18000 | 7200 |
| 850 | 91.49 | 1.18 | 12.5 | 2729 | 18000 | 7200 |
| 850 | 117.17 | 0.92 | 9.7 | 2786 | 18000 | 7200 |
| 850 | 128.73 | 0.84 | 8.9 | 2804 | 18000 | 7200 |
| 850 | 158.76 | 0.68 | 7.2 | 2838 | 18000 | 7200 |
| 850 | 184.88 | 0.58 | 6.2 | 2859 | 18000 | 7200 |
| 855 | 203.11 | 0.53 | 5.6 | 2871 | 18000 | 7200 |
| 850 | 250.50 | 0.43 | 4.5 | 2893 | 18000 | 7200 |
| 845 | 292.36 | 0.37 | 3.9 | 2906 | 18000 | 7200 |
| 845 | 315.73 | 0.34 | 3.6 | 2912 | 18000 | 7200 |
| 845 | 360.58 | 0.30 | 3.2 | 2922 | 18000 | 7200 |

## IS102

| $Mn_2$ [Nm] | i | $Pn_1$ [kW] | n2 [rpm] | Fr1 [N] | Fr2 D [N] | Fr2 C-L [N] |
|---|---|---|---|---|---|---|
| 610 | 8.06 | 9.41 | 141.4 | 589 | 16327 | 4665 |
| 650 | 8.85 | 9.14 | 128.9 | 673 | 16772 | 4792 |
| 685 | 10.88 | 7.83 | 104.7 | 1002 | 17996 | 5142 |
| 720 | 12.75 | 7.02 | 89.4 | 1203 | 18963 | 5418 |
| 865 | 13.99 | 7.69 | 81.5 | 1036 | 19103 | 5458 |
| 940 | 17.21 | 6.79 | 66.2 | 1269 | 20416 | 5833 |
| 1010 | 19.00 | 6.61 | 60.0 | 1311 | 20941 | 5983 |
| 1010 | 22.13 | 5.68 | 51.5 | 1548 | 22000 | 6346 |
| 1080 | 24.28 | 5.53 | 47.0 | 1582 | 22000 | 6501 |
| 1080 | 26.33 | 5.10 | 43.3 | 1692 | 22000 | 6709 |
| 1080 | 29.87 | 4.50 | 38.2 | 1845 | 22000 | 7042 |
| 1280 | 32.40 | 4.91 | 35.2 | 1935 | 22000 | 7264 |
| 1195 | 34.91 | 4.26 | 32.7 | 2076 | 22000 | 7550 |
| 1280 | 38.30 | 4.16 | 29.8 | 2097 | 22000 | 7742 |
| 1110 | 44.00 | 3.14 | 25.9 | 2316 | 22000 | 8309 |
| 1365 | 47.13 | 3.60 | 24.2 | 2216 | 22000 | 8295 |
| 1110 | 55.14 | 2.50 | 20.7 | 2452 | 22000 | 9000 |
| 1365 | 59.40 | 2.86 | 19.2 | 2376 | 22000 | 9000 |
| 1365 | 67.84 | 2.50 | 16.8 | 2452 | 22000 | 9000 |

## IS103

| $Mn_2$ [Nm] | i | $Pn_1$ [kW] | n2 [rpm] | Fr1 [N] | Fr2 D [N] | Fr2 C-L [N] |
|---|---|---|---|---|---|---|
| 1365 | 74.18 | 2.34 | 15.4 | 2498 | 22000 | 9000 |
| 1365 | 81.39 | 2.13 | 14.0 | 2541 | 22000 | 9000 |
| 1365 | 100.15 | 1.73 | 11.4 | 2625 | 22000 | 9000 |
| 1365 | 110.55 | 1.57 | 10.3 | 2659 | 22000 | 9000 |

# 5.4 IS REDUCTOR - 1140 RPM



## IS103

| $Mn_2$ [Nm] | i | $Pn_1$ [kW] | n2 [rpm] | Fr1 [N] | Fr2 D [N] | Fr2 C-L [N] |
|---|---|---|---|---|---|---|
| 1365 | 128.73 | 1.35 | 8.9 | 2706 | 22000 | 9000 |
| 1365 | 141.24 | 1.23 | 8.1 | 2731 | 22000 | 9000 |
| 1370 | 173.78 | 1.00 | 6.6 | 2779 | 22000 | 9000 |
| 1365 | 203.11 | 0.85 | 5.6 | 2810 | 22000 | 9000 |
| 1365 | 222.85 | 0.78 | 5.1 | 2825 | 22000 | 9000 |
| 1365 | 274.20 | 0.63 | 4.2 | 2856 | 22000 | 9000 |
| 1370 | 320.79 | 0.54 | 3.5 | 2875 | 22000 | 9000 |
| 1360 | 345.60 | 0.50 | 3.3 | 2883 | 22000 | 9000 |
| 1360 | 394.69 | 0.44 | 2.9 | 2897 | 22000 | 9000 |

## IS122

| $Mn_2$ [Nm] | i | $Pn_1$ [kW] | n2 [rpm] | Fr1 [N] | Fr2 D [N] | Fr2 C-L [N] |
|---|---|---|---|---|---|---|
| 1080 | 8.48 | 15.83 | 134.4 | 2925 | 21217 | 6062 |
| 1225 | 9.30 | 16.38 | 122.6 | 2890 | 21272 | 6078 |
| 1370 | 11.42 | 14.92 | 99.9 | 2987 | 22449 | 6414 |
| 1590 | 12.63 | 15.66 | 90.3 | 2941 | 22293 | 6369 |
| 1735 | 13.84 | 15.59 | 82.4 | 2945 | 22464 | 6418 |
| 1880 | 16.99 | 13.76 | 67.1 | 3066 | 23915 | 6833 |
| 2020 | 21.25 | 11.82 | 53.6 | 3190 | 25743 | 7355 |
| 2095 | 23.29 | 11.18 | 48.9 | 3233 | 26480 | 7566 |
| 2165 | 26.15 | 10.29 | 43.6 | 3291 | 27563 | 7875 |
| 2165 | 28.60 | 9.41 | 39.9 | 3349 | 28737 | 8211 |
| 2560 | 30.51 | 10.43 | 37.4 | 3387 | 29609 | 8460 |
| 2560 | 33.44 | 9.52 | 34.1 | 3438 | 30000 | 8822 |
| 2560 | 35.20 | 9.04 | 32.4 | 3464 | 30000 | 9029 |
| 2560 | 41.07 | 7.75 | 27.8 | 3536 | 30000 | 9674 |
| 2560 | 43.60 | 7.30 | 26.1 | 3561 | 30000 | 9933 |
| 2050 | 49.04 | 5.20 | 23.2 | 3678 | 30000 | 11123 |
| 2220 | 53.75 | 5.14 | 21.2 | 3681 | 30000 | 11200 |
| 2560 | 66.00 | 4.82 | 17.3 | 3698 | 30000 | 11200 |

## IS123

| $Mn_2$ [Nm] | i | $Pn_1$ [kW] | n2 [rpm] | Fr1 [N] | Fr2 D [N] | Fr2 C-L [N] |
|---|---|---|---|---|---|---|
| 2305 | 71.07 | 4.12 | 16.0 | 3742 | 30000 | 11200 |
| 2560 | 87.27 | 3.73 | 13.1 | 3763 | 30000 | 11200 |
| 2560 | 112.52 | 2.89 | 10.1 | 3809 | 30000 | 11200 |
| 2560 | 123.33 | 2.64 | 9.2 | 3822 | 30000 | 11200 |
| 2565 | 133.78 | 2.43 | 8.5 | 3834 | 30000 | 11200 |
| 2560 | 151.43 | 2.15 | 7.5 | 3849 | 30000 | 11200 |
| 2565 | 177.53 | 1.83 | 6.4 | 3866 | 30000 | 11200 |
| 2555 | 194.59 | 1.67 | 5.9 | 3875 | 30000 | 11200 |

# 5.4 IS REDUCTOR - 1140 RPM



## IS123

| $Mn_2$ [Nm] | i | $Pn_1$ [kW] | n2 [rpm] | Fr1 [N] | Fr2 D [N] | Fr2 C-L [N] |
|---|---|---|---|---|---|---|
| 2565 | 238.93 | 1.36 | 4.8 | 3892 | 30000 | 11200 |

# 5.5 IS REDUCTOR - 900 RPM



## IS052

| $Mn_2$ [Nm] | i | $Pn_1$ [kW] | n2 [rpm] | Fr1 [N] | Fr2 D [N] | Fr2 C-L [N] |
|---|---|---|---|---|---|---|
| 123 | 8.63 | 1.39 | 104.3 | 683 | 4011 | 4011 |
| 137 | 11.14 | 1.20 | 80.8 | 781 | 4334 | 4334 |
| 152 | 13.66 | 1.08 | 65.9 | 842 | 4593 | 4593 |
| 174 | 15.27 | 1.11 | 58.9 | 830 | 4631 | 4631 |
| 174 | 16.29 | 1.04 | 55.3 | 866 | 4762 | 4762 |
| 174 | 18.63 | 0.91 | 48.3 | 934 | 5045 | 5045 |
| 188 | 21.04 | 0.87 | 42.8 | 953 | 5189 | 5189 |
| 188 | 24.07 | 0.76 | 37.4 | 1010 | 5496 | 5496 |
| 208 | 25.79 | 0.78 | 34.9 | 994 | 5476 | 5476 |
| 208 | 27.81 | 0.73 | 32.4 | 1024 | 5659 | 5659 |
| 208 | 30.00 | 0.67 | 30.0 | 1052 | 5848 | 5848 |
| 256 | 32.55 | 0.76 | 27.6 | 1068 | 5994 | 5994 |
| 282 | 36.55 | 0.75 | 24.6 | 1075 | 6000 | 6000 |
| 298 | 39.90 | 0.73 | 22.6 | 1084 | 6000 | 6000 |
| 298 | 42.63 | 0.68 | 21.1 | 1105 | 6000 | 6000 |
| 298 | 47.20 | 0.61 | 19.1 | 1134 | 6000 | 6000 |
| 298 | 52.25 | 0.55 | 17.2 | 1161 | 6000 | 6000 |
| 298 | 57.86 | 0.50 | 15.6 | 1184 | 6000 | 6000 |
| 298 | 72.83 | 0.40 | 12.4 | 1230 | 6000 | 6000 |

## IS053

| $Mn_2$ [Nm] | i | $Pn_1$ [kW] | n2 [rpm] | Fr1 [N] | Fr2 D [N] | Fr2 C-L [N] |
|---|---|---|---|---|---|---|
| 300 | 74.20 | 0.40 | 12.1 | 1233 | 6000 | 6000 |
| 298 | 95.84 | 0.31 | 9.4 | 1272 | 6000 | 6000 |
| 296 | 117.48 | 0.25 | 7.7 | 1297 | 6000 | 6000 |
| 300 | 137.45 | 0.22 | 6.5 | 1313 | 6000 | 6000 |
| 300 | 177.55 | 0.17 | 5.1 | 1334 | 6000 | 6000 |
| 304 | 198.45 | 0.15 | 4.5 | 1342 | 6000 | 6000 |
| 298 | 217.64 | 0.14 | 4.1 | 1347 | 6000 | 6000 |
| 294 | 256.33 | 0.11 | 3.5 | 1356 | 6000 | 6000 |
| 292 | 314.21 | 0.09 | 2.9 | 1366 | 6000 | 6000 |

## IS062

| $Mn_2$ [Nm] | i | $Pn_1$ [kW] | n2 [rpm] | Fr1 [N] | Fr2 D [N] | Fr2 C-L [N] |
|---|---|---|---|---|---|---|
| 238 | 8.00 | 2.89 | 112.5 | 297 | 6269 | 2508 |
| 260 | 9.55 | 2.65 | 94.3 | 392 | 6578 | 2631 |
| 282 | 11.71 | 2.34 | 76.9 | 511 | 7004 | 2802 |
| 302 | 13.36 | 2.20 | 67.4 | 561 | 7231 | 2892 |
| 324 | 15.94 | 1.98 | 56.5 | 648 | 7633 | 3053 |
| 332 | 19.55 | 1.65 | 46.0 | 775 | 8308 | 3323 |
| 338 | 23.18 | 1.42 | 38.8 | 862 | 8898 | 3559 |

# 5.5 IS REDUCTOR - 900 RPM



## IS062

| $Mn_2$ [Nm] | i | $Pn_1$ [kW] | n2 [rpm] | Fr1 [N] | Fr2 D [N] | Fr2 C-L [N] |
|---|---|---|---|---|---|---|
| 346 | 25.14 | 1.34 | 35.8 | 894 | 9159 | 3663 |
| 346 | 27.66 | 1.22 | 32.5 | 941 | 9553 | 3821 |
| 360 | 30.00 | 1.17 | 30.0 | 960 | 9767 | 3907 |
| 510 | 36.57 | 1.36 | 24.6 | 967 | 9986 | 3994 |
| 510 | 39.38 | 1.26 | 22.9 | 998 | 10000 | 4000 |
| 510 | 43.64 | 1.14 | 20.6 | 1038 | 10000 | 4000 |
| 510 | 46.10 | 1.08 | 19.5 | 1058 | 10000 | 4000 |
| 510 | 53.53 | 0.93 | 16.8 | 1107 | 10000 | 4000 |
| 510 | 55.00 | 0.90 | 16.4 | 1115 | 10000 | 4000 |
| 510 | 67.47 | 0.73 | 13.3 | 1169 | 10000 | 4000 |

## IS063

| $Mn_2$ [Nm] | i | $Pn_1$ [kW] | n2 [rpm] | Fr1 [N] | Fr2 D [N] | Fr2 C-L [N] |
|---|---|---|---|---|---|---|
| 510 | 81.43 | 0.62 | 11.1 | 1210 | 10000 | 4000 |
| 510 | 99.89 | 0.51 | 9.0 | 1247 | 10000 | 4000 |
| 510 | 126.43 | 0.40 | 7.1 | 1281 | 10000 | 4000 |
| 510 | 150.85 | 0.34 | 6.0 | 1302 | 10000 | 4000 |
| 515 | 185.05 | 0.28 | 4.9 | 1321 | 10000 | 4000 |
| 510 | 217.79 | 0.23 | 4.1 | 1335 | 10000 | 4000 |
| 510 | 267.16 | 0.19 | 3.4 | 1348 | 10000 | 4000 |

## IS082

| $Mn_2$ [Nm] | i | $Pn_1$ [kW] | n2 [rpm] | Fr1 [N] | Fr2 D [N] | Fr2 C-L [N] |
|---|---|---|---|---|---|---|
| 396 | 7.34 | 5.24 | 122.6 | 1175 | 14112 | 4032 |
| 432 | 8.06 | 5.21 | 111.6 | 1188 | 14444 | 4127 |
| 470 | 9.94 | 4.59 | 90.5 | 1406 | 15455 | 4416 |
| 505 | 11.61 | 4.23 | 77.5 | 1529 | 16209 | 4631 |
| 540 | 12.75 | 4.12 | 70.6 | 1565 | 16623 | 4749 |
| 555 | 17.29 | 3.12 | 52.0 | 1910 | 18000 | 5311 |
| 555 | 20.14 | 2.68 | 44.7 | 2063 | 18000 | 5623 |
| 575 | 22.13 | 2.53 | 40.7 | 2113 | 18000 | 5795 |
| 575 | 24.00 | 2.33 | 37.5 | 2181 | 18000 | 5974 |
| 650 | 27.29 | 2.32 | 33.0 | 2190 | 18000 | 6168 |
| 650 | 28.67 | 2.20 | 31.4 | 2228 | 18000 | 6285 |
| 850 | 31.78 | 2.60 | 28.3 | 2226 | 18000 | 6433 |
| 850 | 34.91 | 2.37 | 25.8 | 2294 | 18000 | 6667 |
| 850 | 40.05 | 2.06 | 22.5 | 2383 | 18000 | 7022 |
| 850 | 43.05 | 1.92 | 20.9 | 2425 | 18000 | 7200 |
| 850 | 50.25 | 1.64 | 17.9 | 2506 | 18000 | 7200 |
| 850 | 54.27 | 1.52 | 16.6 | 2542 | 18000 | 7200 |
| 850 | 61.98 | 1.33 | 14.5 | 2597 | 18000 | 7200 |

# 5.5 IS REDUCTOR - 900 RPM



## IS083

| $Mn_2$ [Nm] | i | $Pn_1$ [kW] | n2 [rpm] | Fr1 [N] | Fr2 D [N] | Fr2 C-L [N] |
|---|---|---|---|---|---|---|
| 850 | 67.52 | 1.25 | 13.3 | 2629 | 18000 | 7200 |
| 850 | 74.18 | 1.14 | 12.1 | 2661 | 18000 | 7200 |
| 850 | 91.49 | 0.92 | 9.8 | 2723 | 18000 | 7200 |
| 850 | 117.17 | 0.72 | 7.7 | 2781 | 18000 | 7200 |
| 850 | 128.73 | 0.66 | 7.0 | 2799 | 18000 | 7200 |
| 850 | 158.76 | 0.53 | 5.7 | 2835 | 18000 | 7200 |
| 850 | 184.88 | 0.46 | 4.9 | 2856 | 18000 | 7200 |
| 855 | 203.11 | 0.42 | 4.4 | 2868 | 18000 | 7200 |
| 850 | 250.50 | 0.34 | 3.6 | 2891 | 18000 | 7200 |
| 845 | 292.36 | 0.29 | 3.1 | 2904 | 18000 | 7200 |
| 845 | 315.73 | 0.27 | 2.9 | 2911 | 18000 | 7200 |
| 845 | 360.58 | 0.23 | 2.5 | 2920 | 18000 | 7200 |

## IS102

| $Mn_2$ [Nm] | i | $Pn_1$ [kW] | n2 [rpm] | Fr1 [N] | Fr2 D [N] | Fr2 C-L [N] |
|---|---|---|---|---|---|---|
| 610 | 8.06 | 7.35 | 111.6 | 530 | 17780 | 5080 |
| 650 | 8.85 | 7.14 | 101.7 | 616 | 18268 | 5220 |
| 685 | 10.88 | 6.12 | 82.7 | 953 | 19599 | 5600 |
| 720 | 12.75 | 5.49 | 70.6 | 1160 | 20652 | 5901 |
| 865 | 13.99 | 6.01 | 64.3 | 988 | 20834 | 5953 |
| 940 | 17.21 | 5.31 | 52.3 | 1227 | 22000 | 6362 |
| 1010 | 19.00 | 5.17 | 47.4 | 1270 | 22000 | 6529 |
| 1010 | 22.13 | 4.44 | 40.7 | 1513 | 22000 | 6922 |
| 1080 | 24.28 | 4.32 | 37.1 | 1548 | 22000 | 7093 |
| 1080 | 26.33 | 3.99 | 34.2 | 1660 | 22000 | 7318 |
| 1080 | 29.87 | 3.51 | 30.1 | 1818 | 22000 | 7678 |
| 1280 | 32.40 | 3.84 | 27.8 | 1909 | 22000 | 7918 |
| 1195 | 34.91 | 3.33 | 25.8 | 2054 | 22000 | 8223 |
| 1280 | 38.30 | 3.25 | 23.5 | 2076 | 22000 | 8434 |
| 1110 | 44.00 | 2.45 | 20.4 | 2300 | 22000 | 9000 |
| 1365 | 47.13 | 2.82 | 19.1 | 2197 | 22000 | 9000 |
| 1110 | 55.14 | 1.96 | 16.3 | 2439 | 22000 | 9000 |
| 1365 | 59.40 | 2.23 | 15.2 | 2361 | 22000 | 9000 |
| 1365 | 67.84 | 1.96 | 13.3 | 2439 | 22000 | 9000 |

## IS103

| $Mn_2$ [Nm] | i | $Pn_1$ [kW] | n2 [rpm] | Fr1 [N] | Fr2 D [N] | Fr2 C-L [N] |
|---|---|---|---|---|---|---|
| 1365 | 74.18 | 1.83 | 12.1 | 2486 | 22000 | 9000 |
| 1365 | 81.39 | 1.66 | 11.1 | 2530 | 22000 | 9000 |
| 1365 | 100.15 | 1.35 | 9.0 | 2616 | 22000 | 9000 |
| 1365 | 110.55 | 1.23 | 8.1 | 2651 | 22000 | 9000 |

# 5.5 IS REDUCTOR - 900 RPM



## IS103

| $Mn_2$ [Nm] | i | $Pn_1$ [kW] | n2 [rpm] | Fr1 [N] | Fr2 D [N] | Fr2 C-L [N] |
|---|---|---|---|---|---|---|
| 1365 | 128.73 | 1.05 | 7.0 | 2699 | 22000 | 9000 |
| 1365 | 141.24 | 0.96 | 6.4 | 2725 | 22000 | 9000 |
| 1370 | 173.78 | 0.78 | 5.2 | 2774 | 22000 | 9000 |
| 1365 | 203.11 | 0.67 | 4.4 | 2805 | 22000 | 9000 |
| 1365 | 222.85 | 0.61 | 4.0 | 2821 | 22000 | 9000 |
| 1365 | 274.20 | 0.49 | 3.3 | 2853 | 22000 | 9000 |
| 1370 | 320.79 | 0.42 | 2.8 | 2873 | 22000 | 9000 |
| 1360 | 345.60 | 0.39 | 2.6 | 2881 | 22000 | 9000 |
| 1360 | 394.69 | 0.34 | 2.3 | 2894 | 22000 | 9000 |

## IS122

| $Mn_2$ [Nm] | i | $Pn_1$ [kW] | n2 [rpm] | Fr1 [N] | Fr2 D [N] | Fr2 C-L [N] |
|---|---|---|---|---|---|---|
| 1080 | 8.48 | 12.38 | 106.1 | 2900 | 23269 | 6648 |
| 1225 | 9.30 | 12.81 | 96.8 | 2864 | 23372 | 6678 |
| 1370 | 11.42 | 11.66 | 78.8 | 2963 | 24689 | 7054 |
| 1590 | 12.63 | 12.24 | 71.3 | 2916 | 24586 | 7025 |
| 1735 | 13.84 | 12.19 | 65.0 | 2921 | 24815 | 7090 |
| 1880 | 16.99 | 10.75 | 53.0 | 3044 | 26428 | 7551 |
| 2020 | 21.25 | 9.24 | 42.4 | 3172 | 28448 | 8128 |
| 2095 | 23.29 | 8.74 | 38.6 | 3215 | 29267 | 8362 |
| 2165 | 26.15 | 8.05 | 34.4 | 3274 | 30000 | 8703 |
| 2165 | 28.60 | 7.36 | 31.5 | 3333 | 30000 | 9066 |
| 2560 | 30.51 | 8.15 | 29.5 | 3373 | 30000 | 9335 |
| 2560 | 33.44 | 7.44 | 26.9 | 3425 | 30000 | 9727 |
| 2560 | 35.20 | 7.07 | 25.6 | 3452 | 30000 | 9950 |
| 2560 | 41.07 | 6.06 | 21.9 | 3525 | 30000 | 10647 |
| 2560 | 43.60 | 5.71 | 20.6 | 3551 | 30000 | 10928 |
| 2050 | 49.04 | 4.06 | 18.4 | 3671 | 30000 | 11200 |
| 2220 | 53.75 | 4.01 | 16.7 | 3674 | 30000 | 11200 |
| 2560 | 66.00 | 3.77 | 13.6 | 3692 | 30000 | 11200 |

## IS123

| $Mn_2$ [Nm] | i | $Pn_1$ [kW] | n2 [rpm] | Fr1 [N] | Fr2 D [N] | Fr2 C-L [N] |
|---|---|---|---|---|---|---|
| 2305 | 71.07 | 3.22 | 12.7 | 3737 | 30000 | 11200 |
| 2560 | 87.27 | 2.91 | 10.3 | 3758 | 30000 | 11200 |
| 2560 | 112.52 | 2.26 | 8.0 | 3805 | 30000 | 11200 |
| 2560 | 123.33 | 2.06 | 7.3 | 3819 | 30000 | 11200 |
| 2565 | 133.78 | 1.90 | 6.7 | 3830 | 30000 | 11200 |
| 2560 | 151.43 | 1.68 | 5.9 | 3846 | 30000 | 11200 |
| 2565 | 177.53 | 1.43 | 5.1 | 3864 | 30000 | 11200 |
| 2555 | 194.59 | 1.30 | 4.6 | 3873 | 30000 | 11200 |

# 5.5 IS REDUCTOR - 900 RPM



## IS123

| $Mn_2$ [Nm] | i | $Pn_1$ [kW] | n2 [rpm] | Fr1 [N] | Fr2 D [N] | Fr2 C-L [N] |
|---|---|---|---|---|---|---|
| 2565 | 238.93 | 1.07 | 3.8 | 3890 | 30000 | 11200 |

# 5.6 IS REDUCTOR - 700 RPM



## IS052

| $Mn_2$ [Nm] | i | $Pn_1$ [kW] | n2 [rpm] | Fr1 [N] | Fr2 D [N] | Fr2 C-L [N] |
|---|---|---|---|---|---|---|
| 123 | 8.63 | 1.07 | 81.2 | 674 | 4435 | 4435 |
| 137 | 11.14 | 0.93 | 62.8 | 773 | 4795 | 4795 |
| 152 | 13.66 | 0.84 | 51.3 | 835 | 5086 | 5086 |
| 174 | 15.27 | 0.86 | 45.8 | 823 | 5141 | 5141 |
| 174 | 16.29 | 0.80 | 43.0 | 859 | 5283 | 5283 |
| 174 | 18.63 | 0.70 | 37.6 | 928 | 5590 | 5590 |
| 188 | 21.04 | 0.67 | 33.3 | 947 | 5756 | 5756 |
| 188 | 24.07 | 0.59 | 29.1 | 1005 | 6000 | 6000 |
| 208 | 25.79 | 0.61 | 27.1 | 989 | 6000 | 6000 |
| 208 | 27.81 | 0.56 | 25.2 | 1019 | 6000 | 6000 |
| 208 | 30.00 | 0.52 | 23.3 | 1047 | 6000 | 6000 |
| 256 | 32.55 | 0.59 | 21.5 | 1064 | 6000 | 6000 |
| 282 | 36.55 | 0.58 | 19.1 | 1071 | 6000 | 6000 |
| 298 | 39.90 | 0.56 | 17.5 | 1081 | 6000 | 6000 |
| 298 | 42.63 | 0.53 | 16.4 | 1101 | 6000 | 6000 |
| 298 | 47.20 | 0.47 | 14.8 | 1131 | 6000 | 6000 |
| 298 | 52.25 | 0.43 | 13.4 | 1158 | 6000 | 6000 |
| 298 | 57.86 | 0.39 | 12.1 | 1182 | 6000 | 6000 |
| 298 | 72.83 | 0.31 | 9.6 | 1228 | 6000 | 6000 |

## IS053

| $Mn_2$ [Nm] | i | $Pn_1$ [kW] | n2 [rpm] | Fr1 [N] | Fr2 D [N] | Fr2 C-L [N] |
|---|---|---|---|---|---|---|
| 300 | 74.20 | 0.31 | 9.4 | 1231 | 6000 | 6000 |
| 298 | 95.84 | 0.24 | 7.3 | 1271 | 6000 | 6000 |
| 296 | 117.48 | 0.19 | 6.0 | 1296 | 6000 | 6000 |
| 300 | 137.45 | 0.17 | 5.1 | 1312 | 6000 | 6000 |
| 300 | 177.55 | 0.13 | 3.9 | 1333 | 6000 | 6000 |
| 304 | 198.45 | 0.12 | 3.5 | 1341 | 6000 | 6000 |
| 298 | 217.64 | 0.11 | 3.2 | 1347 | 6000 | 6000 |
| 294 | 256.33 | 0.09 | 2.7 | 1356 | 6000 | 6000 |
| 292 | 314.21 | 0.07 | 2.2 | 1365 | 6000 | 6000 |

## IS062

| $Mn_2$ [Nm] | i | $Pn_1$ [kW] | n2 [rpm] | Fr1 [N] | Fr2 D [N] | Fr2 C-L [N] |
|---|---|---|---|---|---|---|
| 238 | 8.00 | 2.24 | 87.5 | 284 | 6975 | 2790 |
| 260 | 9.55 | 2.05 | 73.3 | 380 | 7325 | 2930 |
| 282 | 11.71 | 1.81 | 59.8 | 500 | 7803 | 3121 |
| 302 | 13.36 | 1.70 | 52.4 | 551 | 8065 | 3226 |
| 324 | 15.94 | 1.53 | 43.9 | 639 | 8516 | 3407 |
| 332 | 19.55 | 1.28 | 35.8 | 767 | 9254 | 3702 |
| 338 | 23.18 | 1.10 | 30.2 | 856 | 9901 | 3960 |

# 5.6 IS REDUCTOR - 700 RPM



## IS062

| $Mn_2$ [Nm] | i | $Pn_1$ [kW] | n2 [rpm] | Fr1 [N] | Fr2 D [N] | Fr2 C-L [N] |
|---|---|---|---|---|---|---|
| 346 | 25.14 | 1.04 | 27.8 | 888 | 10000 | 4000 |
| 346 | 27.66 | 0.94 | 25.3 | 935 | 10000 | 4000 |
| 360 | 30.00 | 0.90 | 23.3 | 954 | 10000 | 4000 |
| 510 | 36.57 | 1.05 | 19.1 | 961 | 10000 | 4000 |
| 510 | 39.38 | 0.97 | 17.8 | 993 | 10000 | 4000 |
| 510 | 43.64 | 0.88 | 16.0 | 1034 | 10000 | 4000 |
| 510 | 46.10 | 0.83 | 15.2 | 1054 | 10000 | 4000 |
| 510 | 53.53 | 0.72 | 13.1 | 1103 | 10000 | 4000 |
| 510 | 55.00 | 0.70 | 12.7 | 1111 | 10000 | 4000 |
| 510 | 67.47 | 0.57 | 10.4 | 1166 | 10000 | 4000 |

## IS063

| $Mn_2$ [Nm] | i | $Pn_1$ [kW] | n2 [rpm] | Fr1 [N] | Fr2 D [N] | Fr2 C-L [N] |
|---|---|---|---|---|---|---|
| 510 | 81.43 | 0.48 | 8.6 | 1208 | 10000 | 4000 |
| 510 | 99.89 | 0.39 | 7.0 | 1245 | 10000 | 4000 |
| 510 | 126.43 | 0.31 | 5.5 | 1279 | 10000 | 4000 |
| 510 | 150.85 | 0.26 | 4.6 | 1300 | 10000 | 4000 |
| 515 | 185.05 | 0.21 | 3.8 | 1320 | 10000 | 4000 |
| 510 | 217.79 | 0.18 | 3.2 | 1334 | 10000 | 4000 |
| 510 | 267.16 | 0.15 | 2.6 | 1348 | 10000 | 4000 |

## IS082

| $Mn_2$ [Nm] | i | $Pn_1$ [kW] | n2 [rpm] | Fr1 [N] | Fr2 D [N] | Fr2 C-L [N] |
|---|---|---|---|---|---|---|
| 396 | 7.34 | 4.06 | 95.4 | 1153 | 15474 | 4421 |
| 432 | 8.06 | 4.03 | 86.8 | 1166 | 15847 | 4528 |
| 470 | 9.94 | 3.56 | 70.4 | 1388 | 16959 | 4845 |
| 505 | 11.61 | 3.27 | 60.3 | 1511 | 17790 | 5083 |
| 540 | 12.75 | 3.19 | 54.9 | 1548 | 18000 | 5215 |
| 555 | 17.29 | 2.41 | 40.5 | 1898 | 18000 | 5826 |
| 555 | 20.14 | 2.07 | 34.8 | 2052 | 18000 | 6166 |
| 575 | 22.13 | 1.95 | 31.6 | 2102 | 18000 | 6355 |
| 575 | 24.00 | 1.80 | 29.2 | 2171 | 18000 | 6550 |
| 650 | 27.29 | 1.79 | 25.6 | 2180 | 18000 | 6768 |
| 650 | 28.67 | 1.71 | 24.4 | 2219 | 18000 | 6894 |
| 850 | 31.78 | 2.01 | 22.0 | 2217 | 18000 | 7063 |
| 850 | 34.91 | 1.83 | 20.1 | 2286 | 18000 | 7200 |
| 850 | 40.05 | 1.60 | 17.5 | 2376 | 18000 | 7200 |
| 850 | 43.05 | 1.49 | 16.3 | 2419 | 18000 | 7200 |
| 850 | 50.25 | 1.27 | 13.9 | 2500 | 18000 | 7200 |
| 850 | 54.27 | 1.18 | 12.9 | 2536 | 18000 | 7200 |
| 850 | 61.98 | 1.03 | 11.3 | 2592 | 18000 | 7200 |

# 5.6 IS REDUCTOR - 700 RPM



## IS083

| $Mn_2$ [Nm] | i | $Pn_1$ [kW] | n2 [rpm] | Fr1 [N] | Fr2 D [N] | Fr2 C-L [N] |
|---|---|---|---|---|---|---|
| 850 | 67.52 | 0.97 | 10.4 | 2625 | 18000 | 7200 |
| 850 | 74.18 | 0.88 | 9.4 | 2657 | 18000 | 7200 |
| 850 | 91.49 | 0.71 | 7.7 | 2720 | 18000 | 7200 |
| 850 | 117.17 | 0.56 | 6.0 | 2778 | 18000 | 7200 |
| 850 | 128.73 | 0.51 | 5.4 | 2797 | 18000 | 7200 |
| 850 | 158.76 | 0.41 | 4.4 | 2833 | 18000 | 7200 |
| 850 | 184.88 | 0.35 | 3.8 | 2855 | 18000 | 7200 |
| 855 | 203.11 | 0.32 | 3.5 | 2867 | 18000 | 7200 |
| 850 | 250.50 | 0.26 | 2.8 | 2889 | 18000 | 7200 |
| 845 | 292.36 | 0.22 | 2.4 | 2903 | 18000 | 7200 |
| 845 | 315.73 | 0.21 | 2.2 | 2910 | 18000 | 7200 |
| 845 | 360.58 | 0.18 | 1.9 | 2919 | 18000 | 7200 |

## IS102

| $Mn_2$ [Nm] | i | $Pn_1$ [kW] | n2 [rpm] | Fr1 [N] | Fr2 D [N] | Fr2 C-L [N] |
|---|---|---|---|---|---|---|
| 610 | 8.06 | 5.69 | 86.8 | 501 | 19490 | 5569 |
| 650 | 8.85 | 5.53 | 79.1 | 588 | 20031 | 5723 |
| 685 | 10.88 | 4.73 | 64.3 | 929 | 21487 | 6139 |
| 720 | 12.75 | 4.25 | 54.9 | 1138 | 22000 | 6469 |
| 865 | 13.99 | 4.65 | 50.0 | 964 | 22000 | 6537 |
| 940 | 17.21 | 4.11 | 40.7 | 1206 | 22000 | 6988 |
| 1010 | 19.00 | 4.00 | 36.8 | 1250 | 22000 | 7175 |
| 1010 | 22.13 | 3.43 | 31.6 | 1495 | 22000 | 7601 |
| 1080 | 24.28 | 3.35 | 28.8 | 1531 | 22000 | 7793 |
| 1080 | 26.33 | 3.09 | 26.6 | 1645 | 22000 | 8037 |
| 1080 | 29.87 | 2.72 | 23.4 | 1804 | 22000 | 8429 |
| 1280 | 32.40 | 2.97 | 21.6 | 1896 | 22000 | 8690 |
| 1195 | 34.91 | 2.58 | 20.1 | 2042 | 22000 | 9000 |
| 1280 | 38.30 | 2.51 | 18.3 | 2065 | 22000 | 9000 |
| 1110 | 44.00 | 1.90 | 15.9 | 2292 | 22000 | 9000 |
| 1365 | 47.13 | 2.18 | 14.8 | 2188 | 22000 | 9000 |
| 1110 | 55.14 | 1.51 | 12.7 | 2432 | 22000 | 9000 |
| 1365 | 59.40 | 1.73 | 11.8 | 2353 | 22000 | 9000 |
| 1365 | 67.84 | 1.51 | 10.3 | 2432 | 22000 | 9000 |

## IS103

| $Mn_2$ [Nm] | i | $Pn_1$ [kW] | n2 [rpm] | Fr1 [N] | Fr2 D [N] | Fr2 C-L [N] |
|---|---|---|---|---|---|---|
| 1365 | 74.18 | 1.41 | 9.4 | 2480 | 22000 | 9000 |
| 1365 | 81.39 | 1.29 | 8.6 | 2525 | 22000 | 9000 |
| 1365 | 100.15 | 1.05 | 7.0 | 2612 | 22000 | 9000 |
| 1365 | 110.55 | 0.95 | 6.3 | 2647 | 22000 | 9000 |

# 5.6 IS REDUCTOR - 700 RPM



## IS103

| $Mn_2$ [Nm] | i | $Pn_1$ [kW] | n2 [rpm] | Fr1 [N] | Fr2 D [N] | Fr2 C-L [N] |
|---|---|---|---|---|---|---|
| 1365 | 128.73 | 0.81 | 5.4 | 2696 | 22000 | 9000 |
| 1365 | 141.24 | 0.74 | 5.0 | 2722 | 22000 | 9000 |
| 1370 | 173.78 | 0.61 | 4.0 | 2772 | 22000 | 9000 |
| 1365 | 203.11 | 0.52 | 3.5 | 2803 | 22000 | 9000 |
| 1365 | 222.85 | 0.47 | 3.1 | 2819 | 22000 | 9000 |
| 1365 | 274.20 | 0.38 | 2.5 | 2851 | 22000 | 9000 |
| 1370 | 320.79 | 0.33 | 2.2 | 2871 | 22000 | 9000 |
| 1360 | 345.60 | 0.30 | 2.0 | 2880 | 22000 | 9000 |
| 1360 | 394.69 | 0.26 | 1.8 | 2893 | 22000 | 9000 |

## IS122

| $Mn_2$ [Nm] | i | $Pn_1$ [kW] | n2 [rpm] | Fr1 [N] | Fr2 D [N] | Fr2 C-L [N] |
|---|---|---|---|---|---|---|
| 1080 | 8.48 | 9.58 | 82.5 | 2887 | 25726 | 7350 |
| 1225 | 9.30 | 9.91 | 75.3 | 2851 | 25898 | 7399 |
| 1370 | 11.42 | 9.03 | 61.3 | 2951 | 27388 | 7825 |
| 1590 | 12.63 | 9.47 | 55.4 | 2903 | 27364 | 7818 |
| 1735 | 13.84 | 9.43 | 50.6 | 2908 | 27673 | 7906 |
| 1880 | 16.99 | 8.32 | 41.2 | 3033 | 29485 | 8424 |
| 2020 | 21.25 | 7.15 | 32.9 | 3162 | 30000 | 9068 |
| 2095 | 23.29 | 6.77 | 30.1 | 3206 | 30000 | 9331 |
| 2165 | 26.15 | 6.23 | 26.8 | 3266 | 30000 | 9710 |
| 2165 | 28.60 | 5.69 | 24.5 | 3326 | 30000 | 10104 |
| 2560 | 30.51 | 6.31 | 22.9 | 3366 | 30000 | 10396 |
| 2560 | 33.44 | 5.76 | 20.9 | 3419 | 30000 | 10822 |
| 2560 | 35.20 | 5.47 | 19.9 | 3446 | 30000 | 11065 |
| 2560 | 41.07 | 4.69 | 17.1 | 3520 | 30000 | 11200 |
| 2560 | 43.60 | 4.42 | 16.1 | 3546 | 30000 | 11200 |
| 2050 | 49.04 | 3.14 | 14.3 | 3667 | 30000 | 11200 |
| 2220 | 53.75 | 3.11 | 13.0 | 3671 | 30000 | 11200 |
| 2560 | 66.00 | 2.92 | 10.6 | 3688 | 30000 | 11200 |

## IS123

| $Mn_2$ [Nm] | i | $Pn_1$ [kW] | n2 [rpm] | Fr1 [N] | Fr2 D [N] | Fr2 C-L [N] |
|---|---|---|---|---|---|---|
| 2305 | 71.07 | 2.49 | 9.8 | 3734 | 30000 | 11200 |
| 2560 | 87.27 | 2.25 | 8.0 | 3756 | 30000 | 11200 |
| 2560 | 112.52 | 1.75 | 6.2 | 3803 | 30000 | 11200 |
| 2560 | 123.33 | 1.59 | 5.7 | 3817 | 30000 | 11200 |
| 2565 | 133.78 | 1.47 | 5.2 | 3829 | 30000 | 11200 |
| 2560 | 151.43 | 1.30 | 4.6 | 3845 | 30000 | 11200 |
| 2565 | 177.53 | 1.11 | 3.9 | 3863 | 30000 | 11200 |
| 2555 | 194.59 | 1.01 | 3.6 | 3872 | 30000 | 11200 |

# 5.6 IS REDUCTOR - 700 RPM



## IS123

| $Mn_2$ [Nm] | i | $Pn_1$ [kW] | n2 [rpm] | Fr1 [N] | Fr2 D [N] | Fr2 C-L [N] |
|---|---|---|---|---|---|---|
| 2565 | 238.93 | 0.82 | 2.9 | 3889 | 30000 | 11200 |

# 5.7 IS REDUCTOR - 500 RPM



## IS052

| $Mn_2$ [Nm] | i | $Pn_1$ [kW] | n2 [rpm] | Fr1 [N] | Fr2 D [N] | Fr2 C-L [N] |
|---|---|---|---|---|---|---|
| 123 | 8.63 | 0.76 | 58.0 | 666 | 5067 | 5067 |
| 137 | 11.14 | 0.66 | 44.9 | 766 | 5482 | 5482 |
| 152 | 13.66 | 0.60 | 36.6 | 829 | 5820 | 5820 |
| 174 | 15.27 | 0.61 | 32.7 | 816 | 5901 | 5901 |
| 174 | 16.29 | 0.57 | 30.7 | 853 | 6000 | 6000 |
| 174 | 18.63 | 0.50 | 26.8 | 922 | 6000 | 6000 |
| 188 | 21.04 | 0.48 | 23.8 | 942 | 6000 | 6000 |
| 188 | 24.07 | 0.42 | 20.8 | 1000 | 6000 | 6000 |
| 208 | 25.79 | 0.43 | 19.4 | 984 | 6000 | 6000 |
| 208 | 27.81 | 0.40 | 18.0 | 1015 | 6000 | 6000 |
| 208 | 30.00 | 0.37 | 16.7 | 1043 | 6000 | 6000 |
| 256 | 32.55 | 0.42 | 15.4 | 1060 | 6000 | 6000 |
| 282 | 36.55 | 0.41 | 13.7 | 1067 | 6000 | 6000 |
| 298 | 39.90 | 0.40 | 12.5 | 1077 | 6000 | 6000 |
| 298 | 42.63 | 0.37 | 11.7 | 1098 | 6000 | 6000 |
| 298 | 47.20 | 0.34 | 10.6 | 1128 | 6000 | 6000 |
| 298 | 52.25 | 0.30 | 9.6 | 1155 | 6000 | 6000 |
| 298 | 57.86 | 0.28 | 8.6 | 1179 | 6000 | 6000 |
| 298 | 72.83 | 0.22 | 6.9 | 1226 | 6000 | 6000 |

## IS053

| $Mn_2$ [Nm] | i | $Pn_1$ [kW] | n2 [rpm] | Fr1 [N] | Fr2 D [N] | Fr2 C-L [N] |
|---|---|---|---|---|---|---|
| 300 | 74.20 | 0.22 | 6.7 | 1229 | 6000 | 6000 |
| 298 | 95.84 | 0.17 | 5.2 | 1269 | 6000 | 6000 |
| 296 | 117.48 | 0.14 | 4.3 | 1294 | 6000 | 6000 |
| 300 | 137.45 | 0.12 | 3.6 | 1311 | 6000 | 6000 |
| 300 | 177.55 | 0.09 | 2.8 | 1332 | 6000 | 6000 |
| 304 | 198.45 | 0.08 | 2.5 | 1340 | 6000 | 6000 |
| 298 | 217.64 | 0.07 | 2.3 | 1346 | 6000 | 6000 |
| 294 | 256.33 | 0.06 | 1.9 | 1355 | 6000 | 6000 |
| 292 | 314.21 | 0.05 | 1.6 | 1365 | 6000 | 6000 |

## IS062

| $Mn_2$ [Nm] | i | $Pn_1$ [kW] | n2 [rpm] | Fr1 [N] | Fr2 D [N] | Fr2 C-L [N] |
|---|---|---|---|---|---|---|
| 238 | 8.00 | 1.59 | 62.5 | 270 | 8029 | 3212 |
| 260 | 9.55 | 1.46 | 52.4 | 368 | 8442 | 3377 |
| 282 | 11.71 | 1.29 | 42.7 | 490 | 8997 | 3599 |
| 302 | 13.36 | 1.21 | 37.4 | 541 | 9310 | 3724 |
| 324 | 15.94 | 1.09 | 31.4 | 630 | 9837 | 3935 |
| 332 | 19.55 | 0.91 | 25.6 | 759 | 10000 | 4000 |
| 338 | 23.18 | 0.78 | 21.6 | 849 | 10000 | 4000 |

# 5.7 IS REDUCTOR - 500 RPM



## IS062

| $Mn_2$ [Nm] | i | $Pn_1$ [kW] | n2 [rpm] | Fr1 [N] | Fr2 D [N] | Fr2 C-L [N] |
|---|---|---|---|---|---|---|
| 346 | 25.14 | 0.74 | 19.9 | 882 | 10000 | 4000 |
| 346 | 27.66 | 0.67 | 18.1 | 930 | 10000 | 4000 |
| 360 | 30.00 | 0.64 | 16.7 | 949 | 10000 | 4000 |
| 510 | 36.57 | 0.75 | 13.7 | 956 | 10000 | 4000 |
| 510 | 39.38 | 0.69 | 12.7 | 988 | 10000 | 4000 |
| 510 | 43.64 | 0.62 | 11.5 | 1029 | 10000 | 4000 |
| 510 | 46.10 | 0.59 | 10.8 | 1050 | 10000 | 4000 |
| 510 | 53.53 | 0.51 | 9.3 | 1100 | 10000 | 4000 |
| 510 | 55.00 | 0.50 | 9.1 | 1108 | 10000 | 4000 |
| 510 | 67.47 | 0.40 | 7.4 | 1163 | 10000 | 4000 |

## IS063

| $Mn_2$ [Nm] | i | $Pn_1$ [kW] | n2 [rpm] | Fr1 [N] | Fr2 D [N] | Fr2 C-L [N] |
|---|---|---|---|---|---|---|
| 510 | 81.43 | 0.34 | 6.1 | 1206 | 10000 | 4000 |
| 510 | 99.89 | 0.28 | 5.0 | 1243 | 10000 | 4000 |
| 510 | 126.43 | 0.22 | 4.0 | 1278 | 10000 | 4000 |
| 510 | 150.85 | 0.18 | 3.3 | 1299 | 10000 | 4000 |
| 515 | 185.05 | 0.15 | 2.7 | 1319 | 10000 | 4000 |
| 510 | 217.79 | 0.13 | 2.3 | 1333 | 10000 | 4000 |
| 510 | 267.16 | 0.10 | 1.9 | 1347 | 10000 | 4000 |

## IS082

| $Mn_2$ [Nm] | i | $Pn_1$ [kW] | n2 [rpm] | Fr1 [N] | Fr2 D [N] | Fr2 C-L [N] |
|---|---|---|---|---|---|---|
| 396 | 7.34 | 2.89 | 68.1 | 1132 | 17494 | 4998 |
| 432 | 8.06 | 2.86 | 62.0 | 1145 | 17930 | 5123 |
| 470 | 9.94 | 2.53 | 50.3 | 1369 | 18000 | 5483 |
| 505 | 11.61 | 2.33 | 43.1 | 1494 | 18000 | 5754 |
| 540 | 12.75 | 2.26 | 39.2 | 1531 | 18000 | 5907 |
| 555 | 17.29 | 1.72 | 28.9 | 1885 | 18000 | 6592 |
| 555 | 20.14 | 1.47 | 24.8 | 2041 | 18000 | 6972 |
| 575 | 22.13 | 1.39 | 22.6 | 2092 | 18000 | 7186 |
| 575 | 24.00 | 1.28 | 20.8 | 2162 | 18000 | 7200 |
| 650 | 27.29 | 1.27 | 18.3 | 2171 | 18000 | 7200 |
| 650 | 28.67 | 1.21 | 17.4 | 2210 | 18000 | 7200 |
| 850 | 31.78 | 1.43 | 15.7 | 2208 | 18000 | 7200 |
| 850 | 34.91 | 1.30 | 14.3 | 2278 | 18000 | 7200 |
| 850 | 40.05 | 1.13 | 12.5 | 2369 | 18000 | 7200 |
| 850 | 43.05 | 1.06 | 11.6 | 2412 | 18000 | 7200 |
| 850 | 50.25 | 0.90 | 9.9 | 2494 | 18000 | 7200 |
| 850 | 54.27 | 0.84 | 9.2 | 2531 | 18000 | 7200 |
| 850 | 61.98 | 0.73 | 8.1 | 2588 | 18000 | 7200 |

# 5.7 IS REDUCTOR - 500 RPM



## IS083

| $Mn_2$ [Nm] | i | $Pn_1$ [kW] | n2 [rpm] | Fr1 [N] | Fr2 D [N] | Fr2 C-L [N] |
|---|---|---|---|---|---|---|
| 850 | 67.52 | 0.69 | 7.4 | 2620 | 18000 | 7200 |
| 850 | 74.18 | 0.63 | 6.7 | 2653 | 18000 | 7200 |
| 850 | 91.49 | 0.51 | 5.5 | 2717 | 18000 | 7200 |
| 850 | 117.17 | 0.40 | 4.3 | 2776 | 18000 | 7200 |
| 850 | 128.73 | 0.36 | 3.9 | 2795 | 18000 | 7200 |
| 850 | 158.76 | 0.29 | 3.1 | 2831 | 18000 | 7200 |
| 850 | 184.88 | 0.25 | 2.7 | 2853 | 18000 | 7200 |
| 855 | 203.11 | 0.23 | 2.5 | 2865 | 18000 | 7200 |
| 850 | 250.50 | 0.19 | 2.0 | 2888 | 18000 | 7200 |
| 845 | 292.36 | 0.16 | 1.7 | 2902 | 18000 | 7200 |
| 845 | 315.73 | 0.15 | 1.6 | 2909 | 18000 | 7200 |
| 845 | 360.58 | 0.13 | 1.4 | 2918 | 18000 | 7200 |

## IS102

| $Mn_2$ [Nm] | i | $Pn_1$ [kW] | n2 [rpm] | Fr1 [N] | Fr2 D [N] | Fr2 C-L [N] |
|---|---|---|---|---|---|---|
| 610 | 8.06 | 4.05 | 62.0 | 471 | 22000 | 6293 |
| 650 | 8.85 | 3.93 | 56.5 | 560 | 22000 | 6470 |
| 685 | 10.88 | 3.36 | 45.9 | 905 | 22000 | 6939 |
| 720 | 12.75 | 3.02 | 39.2 | 1116 | 22000 | 7312 |
| 865 | 13.99 | 3.31 | 35.7 | 941 | 22000 | 7405 |
| 940 | 17.21 | 2.92 | 29.1 | 1185 | 22000 | 7917 |
| 1010 | 19.00 | 2.84 | 26.3 | 1229 | 22000 | 8134 |
| 1010 | 22.13 | 2.44 | 22.6 | 1478 | 22000 | 8611 |
| 1080 | 24.28 | 2.38 | 20.6 | 1513 | 22000 | 8833 |
| 1080 | 26.33 | 2.19 | 19.0 | 1629 | 22000 | 9000 |
| 1080 | 29.87 | 1.93 | 16.7 | 1790 | 22000 | 9000 |
| 1280 | 32.40 | 2.11 | 15.4 | 1883 | 22000 | 9000 |
| 1195 | 34.91 | 1.83 | 14.3 | 2031 | 22000 | 9000 |
| 1280 | 38.30 | 1.79 | 13.1 | 2054 | 22000 | 9000 |
| 1110 | 44.00 | 1.35 | 11.4 | 2283 | 22000 | 9000 |
| 1365 | 47.13 | 1.55 | 10.6 | 2178 | 22000 | 9000 |
| 1110 | 55.14 | 1.08 | 9.1 | 2426 | 22000 | 9000 |
| 1365 | 59.40 | 1.23 | 8.4 | 2346 | 22000 | 9000 |
| 1365 | 67.84 | 1.08 | 7.4 | 2426 | 22000 | 9000 |

## IS103

| $Mn_2$ [Nm] | i | $Pn_1$ [kW] | n2 [rpm] | Fr1 [N] | Fr2 D [N] | Fr2 C-L [N] |
|---|---|---|---|---|---|---|
| 1365 | 74.18 | 1.00 | 6.7 | 2474 | 22000 | 9000 |
| 1365 | 81.39 | 0.92 | 6.1 | 2520 | 22000 | 9000 |
| 1365 | 100.15 | 0.74 | 5.0 | 2607 | 22000 | 9000 |
| 1365 | 110.55 | 0.67 | 4.5 | 2643 | 22000 | 9000 |

# 5.7 IS REDUCTOR - 500 RPM



## IS103

| $Mn_2$ [Nm] | i | $Pn_1$ [kW] | n2 [rpm] | Fr1 [N] | Fr2 D [N] | Fr2 C-L [N] |
|---|---|---|---|---|---|---|
| 1365 | 128.73 | 0.58 | 3.9 | 2692 | 22000 | 9000 |
| 1365 | 141.24 | 0.53 | 3.5 | 2718 | 22000 | 9000 |
| 1370 | 173.78 | 0.43 | 2.9 | 2769 | 22000 | 9000 |
| 1365 | 203.11 | 0.37 | 2.5 | 2801 | 22000 | 9000 |
| 1365 | 222.85 | 0.33 | 2.2 | 2817 | 22000 | 9000 |
| 1365 | 274.20 | 0.27 | 1.8 | 2850 | 22000 | 9000 |
| 1370 | 320.79 | 0.23 | 1.6 | 2870 | 22000 | 9000 |
| 1360 | 345.60 | 0.21 | 1.4 | 2878 | 22000 | 9000 |
| 1360 | 394.69 | 0.19 | 1.3 | 2892 | 22000 | 9000 |

## IS122

| $Mn_2$ [Nm] | i | $Pn_1$ [kW] | n2 [rpm] | Fr1 [N] | Fr2 D [N] | Fr2 C-L [N] |
|---|---|---|---|---|---|---|
| 1080 | 8.48 | 6.81 | 59.0 | 2875 | 29386 | 8396 |
| 1225 | 9.30 | 7.04 | 53.8 | 2838 | 29662 | 8475 |
| 1370 | 11.42 | 6.42 | 43.8 | 2939 | 30000 | 8975 |
| 1590 | 12.63 | 6.73 | 39.6 | 2891 | 30000 | 9004 |
| 1735 | 13.84 | 6.70 | 36.1 | 2896 | 30000 | 9127 |
| 1880 | 16.99 | 5.92 | 29.4 | 3022 | 30000 | 9729 |
| 2020 | 21.25 | 5.08 | 23.5 | 3153 | 30000 | 10473 |
| 2095 | 23.29 | 4.81 | 21.5 | 3197 | 30000 | 10779 |
| 2165 | 26.15 | 4.43 | 19.1 | 3258 | 30000 | 11200 |
| 2165 | 28.60 | 4.05 | 17.5 | 3318 | 30000 | 11200 |
| 2560 | 30.51 | 4.49 | 16.4 | 3359 | 30000 | 11200 |
| 2560 | 33.44 | 4.09 | 14.9 | 3412 | 30000 | 11200 |
| 2560 | 35.20 | 3.89 | 14.2 | 3440 | 30000 | 11200 |
| 2560 | 41.07 | 3.33 | 12.2 | 3515 | 30000 | 11200 |
| 2560 | 43.60 | 3.14 | 11.5 | 3541 | 30000 | 11200 |
| 2050 | 49.04 | 2.24 | 10.2 | 3664 | 30000 | 11200 |
| 2220 | 53.75 | 2.21 | 9.3 | 3667 | 30000 | 11200 |
| 2560 | 66.00 | 2.07 | 7.6 | 3685 | 30000 | 11200 |

## IS123

| $Mn_2$ [Nm] | i | $Pn_1$ [kW] | n2 [rpm] | Fr1 [N] | Fr2 D [N] | Fr2 C-L [N] |
|---|---|---|---|---|---|---|
| 2305 | 71.07 | 1.77 | 7.0 | 3731 | 30000 | 11200 |
| 2560 | 87.27 | 1.60 | 5.7 | 3753 | 30000 | 11200 |
| 2560 | 112.52 | 1.24 | 4.4 | 3801 | 30000 | 11200 |
| 2560 | 123.33 | 1.13 | 4.0 | 3815 | 30000 | 11200 |
| 2565 | 133.78 | 1.05 | 3.7 | 3827 | 30000 | 11200 |
| 2560 | 151.43 | 0.92 | 3.3 | 3843 | 30000 | 11200 |
| 2565 | 177.53 | 0.79 | 2.8 | 3861 | 30000 | 11200 |
| 2555 | 194.59 | 0.72 | 2.6 | 3870 | 30000 | 11200 |

# 5.7 IS REDUCTOR - 500 RPM



## IS123

| $Mn_2$ [Nm] | i | $Pn_1$ [kW] | n2 [rpm] | Fr1 [N] | Fr2 D [N] | Fr2 C-L [N] |
|---|---|---|---|---|---|---|
| 2565 | 238.93 | 0.59 | 2.1 | 3888 | 30000 | 11200 |

# 6.1 CONDICIONES DE VENTA



Todos los suministros efectuados por Motovario se rigen exclusivamente por las condiciones generales de venta que se pueden encontrar en nuestra página web:

http://www.motovario.com/spa/empresa/condiciones-de-venta