CATALOGO TECNICO

B SERIES

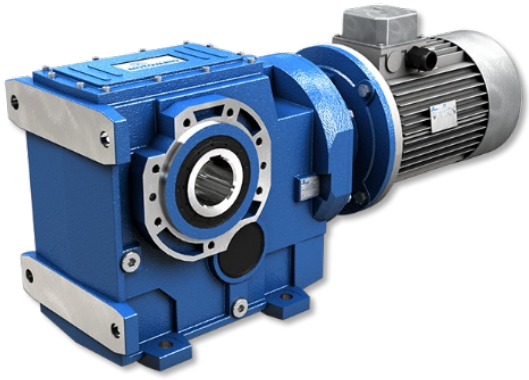

MOTORIDUTTORI **ORTOGONALI**

STANDARD **IEC**

MOTOVARIO®
HEART OF MOTION
a TECO Group company

INDICE

1. INFORMAZIONI GENERALI

1.1 SIMBOLOGIA E FORMULE **5**
1.1.1 Simbologia **5**
1.1.2 Formule **6**
1.2 SELEZIONE DEL PRODOTTO **7**
1.3 FATTORE DI SERVIZIO **8**
1.4 INSTALLAZIONE **9**

2. INFORMAZIONI DI PRODOTTO

2.1 CARATTERISTICHE COSTRUTTIVE **10**
2.2 TIPOLOGIA **11**
2.2.1 Designazione **11**
2.2.2 Versioni **12**
2.2.3 Modularità **16**
2.3 POSIZIONI DI MONTAGGIO **18**
2.3.1 Posizioni di montaggio **18**
2.3.2 Posizione morsettiera **18**
2.4 POTENZA TERMICA **19**
2.4.1 Informazioni **19**
2.4.2 Verifica **19**
2.5 SENSO DI ROTAZIONE **20**
2.6 APPLICAZIONI CRITICHE **21**
2.6.1 Applicazioni critiche **21**
2.6.2 Informazioni **21**
2.7 DISPONIBILITÀ FLANGE ATTACCO MOTORE **22**
2.7.1 Disponibilità flange attacco motore BA **22**
2.7.2 Disponibilità flange attacco motore B **23**
2.8 CUSCINETTI ASSE LENTO **26**
2.9 CARICHI RADIALI **27**
2.9.1 Informazioni **27**
2.9.2 Entrata **27**
2.9.3 Uscita **28**
2.10 LUBRIFICAZIONE **29**

2.10.1 Informazioni 29
2.10.2 Lubrificanti 29
2.10.3 Lubrificanti speciali 30
2.10.4 Quantità 31

2.11 MOMENTI D'INERZIA 32

3. DIMENSIONI

3.1 RIDUTTORI/MOTORIDUTTORI 33
3.1.1 BA.2 33
3.1.2 BA.3 34
3.1.3 CBA.2 35
3.1.4 CBA.3 36
3.1.5 IBA.2 37
3.1.6 IBA.3 38
3.1.7 B 39
3.1.8 CB 41
3.1.9 IB 43

3.2 MOTORI ELETTRICI 45
3.2.1 Motori elettrici 45
3.2.2 Motori ad efficienza standard (TS), alta (TH) e premium (TP) 47
3.2.3 Potenza nominale - [kW] 48

3.3 PESI 49

3.4 ESTREMITÀ D'ALBERO 50

4. ACCESSORI & OPZIONI

4.1 ALBERI LENTI 51

4.2 FLANGIA USCITA 52
4.2.1 BA 52
4.2.2 B 53

4.3 SISTEMI DI FISSAGGIO PENDOLARE 54
4.3.1 Braccio di reazione: Posizioni di montaggio BA 54
4.3.2 Braccio di reazione: Dimensioni BA 54
4.3.3 Braccio di reazione: Posizioni di montaggio B 55
4.3.4 Braccio di reazione: Dimensioni B063-083-103-123 56
4.3.5 Braccio di reazione: Dimensioni B143-153-163 56

4.4 COPERCHIO DI PROTEZIONE ASSE LENTO 57

4.5 DISPOSITIVO ANTIRETRO 58

4.6 ALBERO LENTO CAVO CON CALETTATORE 59

4.7 TENUTE RINFORZATE ASSE LENTO 60

4.8 KIT MONTAGGIO/SMONTAGGIO 61

5. PRESTAZIONALI

5.1 B/BA MOTORIDUTTORE (50Hz) 62

5.2 IB/IBA RIDUTTORE - 1750 RPM 179

5.3 IB/IBA RIDUTTORE - 1400 RPM 186

5.4 IB/IBA RIDUTTORE - 1140 RPM 193

5.5 IB/IBA RIDUTTORE - 900 RPM 200

5.6 IB/IBA RIDUTTORE - 700 RPM 207

5.7 IB/IBA RIDUTTORE - 500 RPM 214

6. CONDIZIONI DI VENDITA

6.1 CONDIZIONI DI VENDITA 221

1.1 SIMBOLOGIA E FORMULE

1.1.1 Simbologia

Dimensione fisica	Simbolo	Simbolo unità di misura	Entrata	Uscita
Potenza	P	[kW]	P_1	P_2
Potenza richiesta	Pr	[kW]	Pr_1	Pr_2
Potenza nominale	Pn	[kW]	Pn_1	Pn_2
Momento torcente	M	[Nm]	M_1	M_2
Momento torcente nominale	Mn	[Nm]		Mn_2
Momento torcente richiesto	Mr	[Nm]	Mr_1	Mr_2
Numero giri	n	[rpm]	n_1	n_2
Forza	F	[N]		
Carico radiale	Fr	[N]	Fr_1	Fr_2
Carico assiale	Fa	[N]	Fa_1	Fa_2
Rapporto di riduzione	i			
Rendimento dinamico	η_d			
Fattore di servizio	f.s.			
Statico	s			
Dinamico	d			
Calcolato	c			
Massimo	max			
Minimo	min			
Momenti d'inerzia	J	[kgm^2]	J_1	
Temperatura ambiente	T_{amb}	[°C]		
Dimensioni		[mm]		

1.1 SIMBOLOGIA E FORMULE

1.1.2 Formule

RIDUTTORE		
Tempo di avviamento o arresto	$t = v / a$	[s]
Velocità di rotazione	$v = \pi * d * n / 60$ $v = \omega * r$	[m/s]
Velocità angolare	$n = 60 * v / (\pi * d)$ $\omega = v / r$	[rpm] [rad/s]
Accelerazione o decelerazione	$a = v / t$	[m/s^2]
Accelerazione angolare	$\alpha = n / (9{,}55 * t)$ $\alpha = \omega / t$	[rad/s^2]
Spazio (in funzione di una accelerazione o di una velocità iniziale o finale)	$s = a * t^2 / 2$ $s = v * t / 2$	[m]
Forza di traslazione su piano orizzontale	$F = \mu * m * g$	[N]
Forza di traslazione su piano verticale (sollevamento)	$F = m * g$	
Forza di traslazione su piano inclinato	$F = m * g (\mu * \cos\beta + \mathrm{sen}\beta)$	
m= massa [kg]; g= accelerazione gravitazionale [m/s^2]; μ= coefficiente di attrito; β= angolo di inclinazione		
Momento di inerzia	$J = m * v^2 / \omega^2$	[kgm^2]
Momento torcente	$M = F * d / 2$ $M = J * \omega / t$	[Nm]

MOTORE e MOTORIDUTTORE		
Tempo di accelerazione	$ta = (Jext+Jm)*n_n/9{,}55+(M_{spunto}-Mr)$	[s]
Tempo di frenatura	$ts = (Jext+Jm)*n_n/9{,}55+(M_{spunto}+Mr)$	[s]
Angolo di rotazione del motore in accelerazione	$\varphi = n_n * ta / 19{,}1$	[rad]
Angolo di rotazione del motore in frenatura	$\varphi = n_n * ts / 19{,}1$	[rad]
Potenza resa all'albero di un motore monofase	$P = V * I * \eta * \cos\omega$	[W]
Potenza resa all'albero di un motore trifase	$P = 1{,}73 * V * I * \eta * \cos\omega$	[W]

FUNZIONAMENTO a 60Hz		
Velocità angolare a 60Hz	$n_{60Hz} = 1{,}2 * n_{50Hz}$	[rpm]
Potenza a 60Hz	$P1_{60Hz} = P1_{50Hz} * V_{60Hz}/V_{50Hz}$	[kW]
Se la tensione di alimentazione V_{60Hz} è uguale a quella di avvolgimento V_{50Hz}, la potenza non varia ovvero $P1_{60Hz} = P1_{50Hz}$ Se la tensione di alimentazione V_{60Hz} è maggiore del 20% di quella di avvolgimento V_{50Hz} , la potenza aumenta del 20% ovvero $P1_{60Hz} = 1{,}2\ P1_{50Hz}$		
Momento torcente a 60Hz	$M_{60hz} = M_{50Hz} * P1_{60Hz} / (1{,}2 * P1_{50Hz})$	[Nm]
Fattore di servizio a 60Hz	$f.s_{60Hz} = f.s_{50Hz} * 1{,}175 * P1_{50Hz} / P1_{60Hz}$	-

1.2 SELEZIONE DEL PRODOTTO

Per la corretta selezione di un riduttore o di un motoriduttore occorre disporre di alcuni dati fondamentali quali:

A. La velocità angolare in entrata al riduttore **(n_1)** e la velocità angolare in uscita **(n_2)**. Attraverso questi due valori è possibile calcolare il rapporto di riduzione **(i)** del riduttore attraverso la formula: $i=n_1/n_2$

B. Il momento torcente richiesto dall'applicazione **(Mr_2)**

Noti questi dati si può procedere alla selezione del motoriduttore o del riduttore.
Questa guida conduce alla selezione del prodotto attraverso pochi passi:

Selezione dei motoriduttori

1. Determinare il fattore di servizio effettivo dell'applicazione **(f.s.)**. Questo parametro è funzione del tipo di carico della macchina azionata, del numero di azionamenti per ora e del numero di ore di funzionamento (vedi paragrafo "Fattore di servizio").
2. Ricavare la potenza in entrata Pr_1 mediante il momento torcente richiesto Mr_2, la velocità n_2 e il rendimento dinamico. $Pr_1=(Mr_2*n_2)/(9550*\eta_d)$. Il valore di rendimento dinamico dipende dalla tipologia del riduttore e dal numero di stadi d'ingranaggi di riduzione (per ricavare il valore di rendimento vedi relativa pagina).
3. Consultare le tabelle delle prestazioni dei motoriduttori ricercando una potenza normalizzata Pn_1 superiore a quella richiesta Pr_1 tale che: $Pn_1 \geq Pr_1$
4. Individuata la potenza nominale idonea, selezionare dunque il motoriduttore in grado di sviluppare la velocità angolare più vicina a quella n_2 desiderata e con fattore di servizio f.s. maggiore o uguale a quello richiesto dall'applicazione.

Nelle tabelle di selezione dei motoriduttori gli abbinamenti sono realizzati con motori 2,4,6 poli alimentati a 50Hz.

Selezione dei riduttori:

1. Determinare il fattore di servizio dell'applicazione **(f.s.)** (vedi paragrafo "Fattore di servizio").
2. Calcolare il rapporto di riduzione i dalla velocità in uscita n_2 richiesta e dalla quella in entrata n_1. $i=n_1/n_2$
3. Calcolare il momento torcente Mc_2 per la selezione del riduttore attraverso la coppia richiesta dall'applicazione Mr_2 ed il fattore di servizio f.s.: $Mc_2=Mr_2*(f.s.)$
4. Consultare le tabelle delle Prestazioni dei Riduttori cercando il riduttore che, col rapporto di riduzione più prossimo a quello calcolato, dispone di una coppia nominale Mn_2 tale che: $Mn_2 \geq Mc_2$

Verifiche

Eseguita la selezione del riduttore o del motoriduttore è opportuno effettuare le seguenti verifiche:

A. **Potenza Termica**

La potenza termica del riduttore deve essere uguale o maggiore della potenza meccanica installata o della potenza richiesta dall'applicazione secondo le indicazioni contenute nella sezione (vedi paragrafo "Potenza termica").

B. **Coppia Massima**

Generalmente la coppia massima (picco di carico istantaneo) che può essere applicata al riduttore non deve superare il 200% della coppia nominale Mn_2 (o, per Atex, M_2max).

C. **Carichi radiali**

1. Verificare che i carichi radiali agenti sugli alberi di entrata e/o di uscita rispettino i valori ammessi a catalogo. Se superiori, aumentare la grandezza del riduttore o modificare la supportazione del carico esterno. Nella fase di verifica occorre tenere conto che i valori indicati a catalogo si riferiscono a carichi agenti sulla mezzeria della sporgenza dell'albero per cui, nel caso il carico sia applicato in posizione diversa, è necessario determinare con le apposite formule il carico ammissibile nella posizione desiderata (vedi paragrafo "Carichi Radiali").
2. In caso di alberi accessori in uscita verificare che il carico applicato sia compatibile con la dimensione dell'albero. In caso di necessità contattare l'ASSISTENZA TECNICA MOTOVARIO.

D. Se al riduttore selezionato verrà abbinato un motore elettrico, verificarne l'applicabilità consultando la tabella delle predisposizioni (vedi paragrafo "Predisposizioni"). Per motori di dimensione maggiore a IEC 180, verificare la necessità di supportare il motore con i piedi. In caso di necessità contattare l'ASSISTENZA TECNICA MOTOVARIO.

1.3 FATTORE DI SERVIZIO

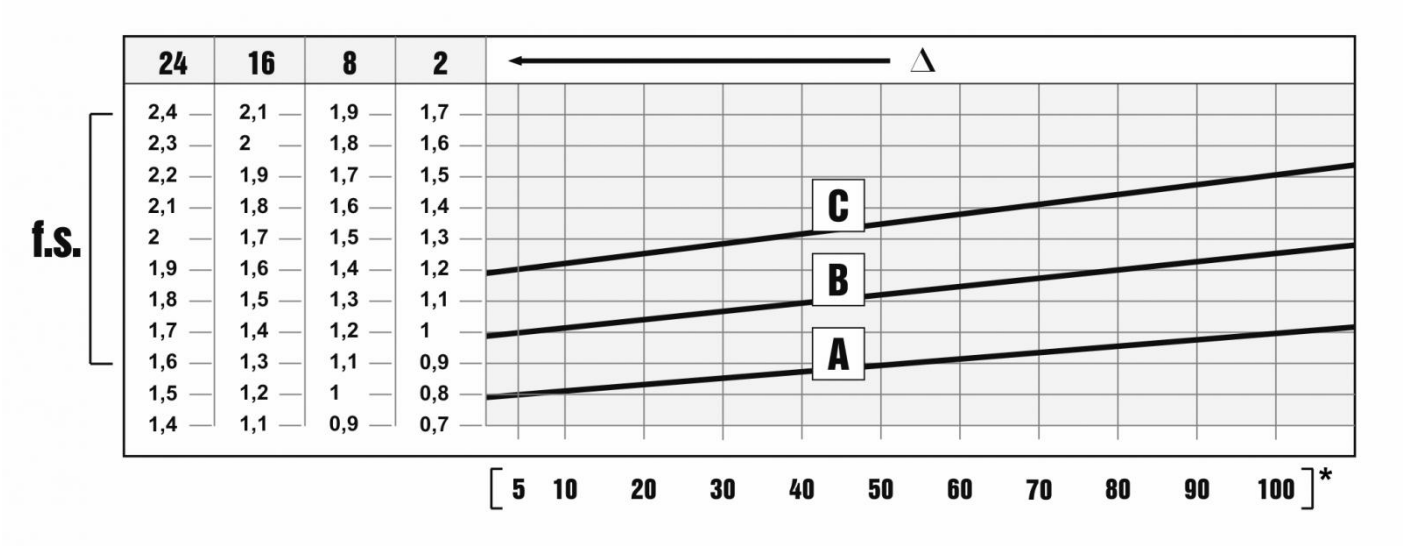

Il fattore di servizio f.s. dipende dalle condizioni di funzionamento alle quali il riduttore è sottoposto. I parametri che occorre considerare per una corretta selezione del fattore di servizio più adeguato sono:

- tipo del carico della macchina azionata: A - B - C
- durata di funzionamento giornaliero: ore/giorno (Δ)
- frequenza di avviamento: avv./ora (*)

CARICO:

- **A** - uniforme = fa ≤ 0,3
- **B** - medio = fa ≤ 3
- **C** - forte = fa ≤ 10

fa = Je/Jm

- Je [kgm^{2}] momento d'inerzia esterno ridotto all'albero motore
- Jm [kgm^{2}] momento d'inerzia motore

Se fa > 10 interpellare il ns. Servizio Tecnico.

A. Coclee per materiali leggeri, ventole, linee di montaggio, nastri trasportatori per materiali leggeri, piccoli agitatori, elevatori, macchine pulitrici, macchine riempitrici, macchine per il controllo, nastri trasportatori.
B. Dispositivi di avvolgimento, apparecchi per l'alimentazione delle macchine per il legno, montacarichi, equilibratrici, filettatrici, agitatori medi e mescolatori, nastri trasportatori per materiali pesanti, verricelli, porte scorrevoli, raschiatore di concime, macchine per l'imballaggio, betoniere, meccanismi per il movimento delle gru, frese, piegatrici, pompe a ingranaggi.
C. Agitatori per materiali pesanti, cesoie, presse, centrifughe, supporti rotanti, verricelli ed ascensori per materiali pesanti, torni per la rettifica, frantoi da pietre, elevatori a tazze, perforatrici, mulini a martello, presse ad eccentrico, piegatrici, tavole rotanti, barilatrici, vibratori, trinciatrici.

1.4 INSTALLAZIONE

Per l'installazione del riduttore è consigliabile attenersi alle seguenti indicazioni:

- Il fissaggio sulla macchina deve essere stabile per evitare qualsiasi vibrazione.
- Verificare il corretto senso di rotazione dell'albero di uscita del riduttore prima del montaggio del gruppo sulla macchina.
- In caso di periodi particolarmente lunghi di stoccaggio (4/6 mesi) se l'anello di tenuta non è immerso nel lubrificante contenuto all'interno del gruppo si consiglia la sua sostituzione in quanto la gomma potrebbe essersi incollata all'albero o addirittura aver perso quelle caratteristiche di elasticità necessarie al corretto funzionamento.
- Quando possibile proteggere il riduttore dall'irraggiamento solare e dalle intemperie.
- Garantire un corretto raffreddamento del motore assicurando un buon passaggio d'aria dal lato ventola.
- Nel caso di temperature ambiente < -5°C o >+40°C contattare il servizio Assistenza Tecnica.
- Il montaggio dei vari organi (pulegge, ruote dentate, giunti, alberi, ecc.) sugli alberi deve essere eseguito utilizzando appositi fori filettati o altri sistemi che comunque garantiscano una corretta operazione senza rischiare il danneggiamento dei cuscinetti o delle parti esterne dei gruppi.
- Lubrificare le superfici a contatto per evitare grippaggi o ossidazioni.
- La verniciatura non deve assolutamente interessare le parti in gomma e i fori esistenti sui tappi di sfiato, quando presenti.
- Per i gruppi provvisti di tappi per olio sostituire il tappo chiuso utilizzato per la spedizione con l'apposito tappo di sfiato.
- Controllare il corretto livello del lubrificante tramite, quando prevista, l'apposita spia.
- La messa in funzione deve avvenire in maniera graduale, evitando l'applicazione immediata del carico massimo.
- Quando sotto alla motorizzazione sono presenti organi, cose o materiali danneggiabili dall'eventuale fuoriuscita, anche limitata, di olio è opportuno prevedere un'apposita protezione.

Montaggio motore su flange pam

Quando il gruppo viene fornito senza motore occorre osservare le seguenti raccomandazioni per garantire un corretto montaggio del motore elettrico. Controllare che le tolleranze dell'albero e della flangia motore siano corrispondenti almeno a una classe di qualità "normale". Pulire accuratamente l'albero, il centraggio ed il piano della flangia da sporco o tracce di vernice. Procedere al montaggio del semigiunto/manicotto (vedi figura) sull'albero del motore elettrico che deve avvenire senza eccessiva forzatura, in caso diverso controllare la corretta posizione e la tolleranza della linguetta motore; utilizzare comunque opportuni sistemi che garantiscano un corretto montaggio senza rischiare il danneggiamento dei cuscinetti motore. Per la versione con semigiunto procedere al montaggio del motore, completo di semigiunto, fasando i denti di trascinamento del semigiunto lato motore con quelli dell'elemento elastico presente sul semigiunto fisso lato riduttore. Non è previsto nessun adattamento della linguetta motore.

Giunto elastico

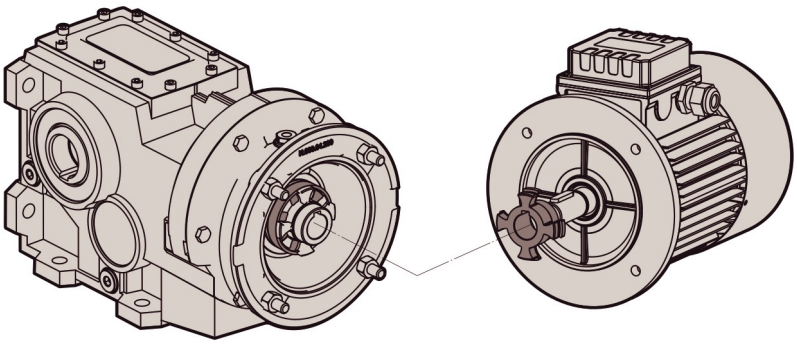

Manicotto PAM

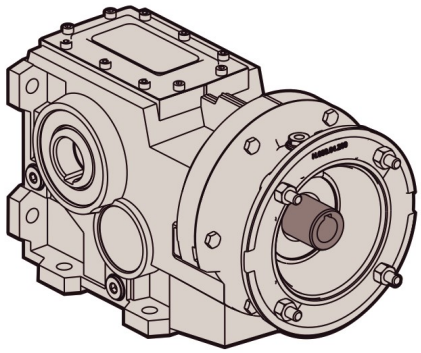

2.1 CARATTERISTICHE COSTRUTTIVE

I prodotti Motovario vengono forniti con il seguente stato di finitura superficiale.

Gruppi con casse in lega di alluminio pressofuso
Le fusioni subiscono le seguenti operazioni di pulizia superficiale:
- Eliminazione delle bave di fonderia con sistemi meccanici di asportazione (trancianti).
- Accurata pallinatura.
- Verniciatura.
- Lavaggio e passivazione.

Gruppi con casse in ghisa grigia:
- Le fusioni vengono sempre verniciate.

Specifiche verniciatura:
- Epossipoliestere Blu Bucciato RAL5010. Prodotto utilizzato: Polvere termoindurente a base di resine poliesteri, modificate con resina epossidica.

Proprietà meccaniche
- Le prove eseguite su lamierini Unichim sgrassati con spessore del film di 60 micron hanno soddisfatto le seguenti caratteristiche: aderenza (ISO2409).

Resistenza al calore:
- 24 ORE A 150°C.

Resistenza alla corrosione:
- Nebbia salina ASTM B 117/97 da 100 a 500 ore in funzione del trattamento preliminare del supporto.

Prestazioni:
- Capacità di carico verificata secondo DIN 3990, ISO 6336, AGMA 2101, ISO 10300, DIN 3991, ISO 281, DIN 743.

Rendimento η:
- Il rendimento è il rapporto tra la potenza resa in uscita P_2 e la assorbita dal riduttore P_1: $\eta = P_2/P_1$.

I riduttori ortogonali della serie B e BA presentano un valore medio pari a:
B..3 stadi = 0,9
BA.2 stadi = 0,95
BA.3 stadi = 0,9

2.2 TIPOLOGIA

2.2.1 Designazione

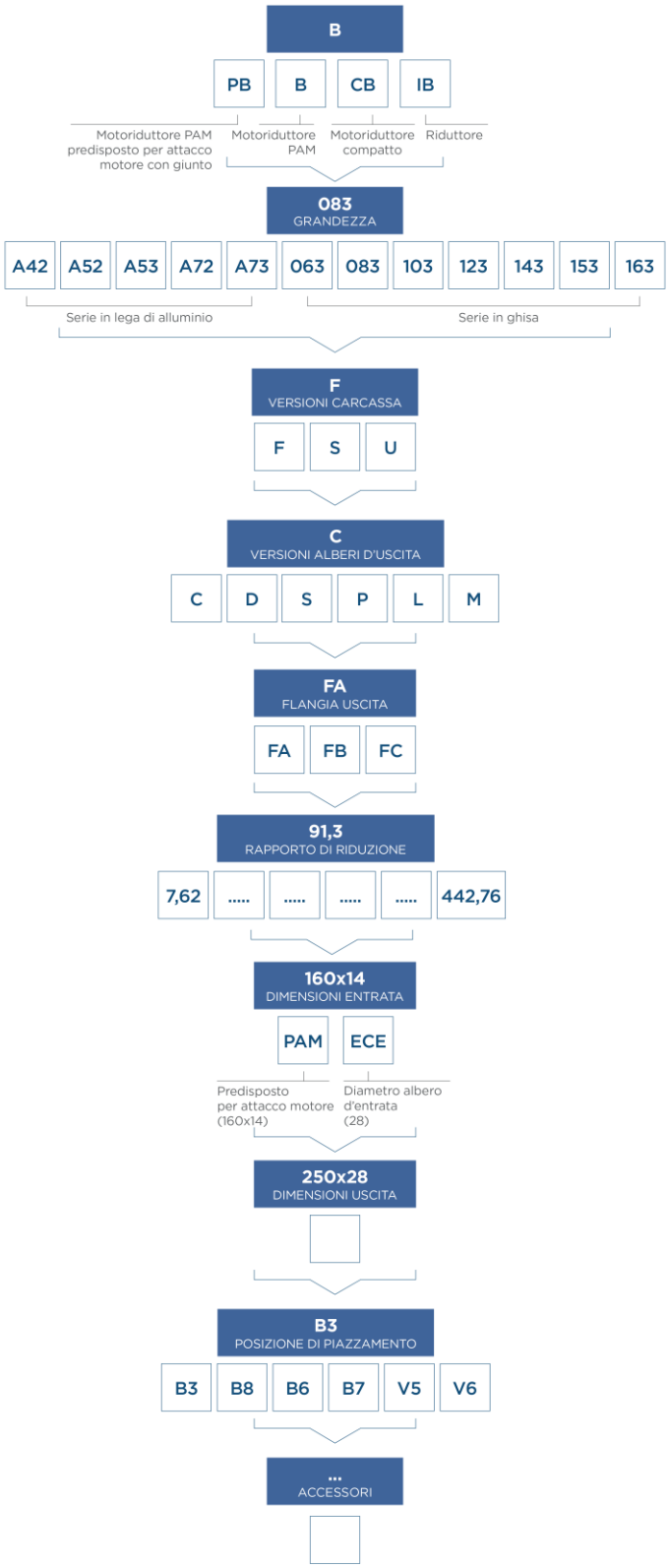

2.2 TIPOLOGIA

2.2.2 Versioni

A40-A50-A70

C FISSAGGIO PIEDE / ALBERO CAVO C

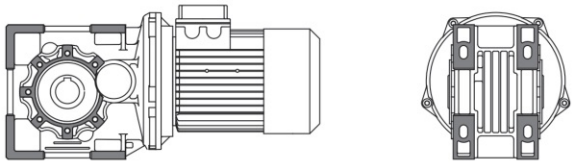

D FISSAGGIO PIEDE / ALBERO PIENO D

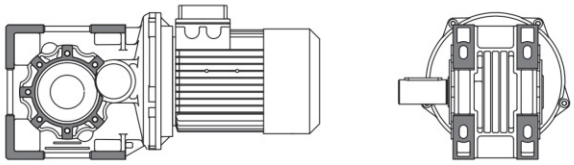

S FISSAGGIO PIEDE / ALBERO CAVO S

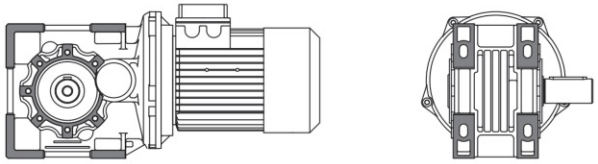

P FISSAGGIO PIEDE / ALBERO DOPPIO P

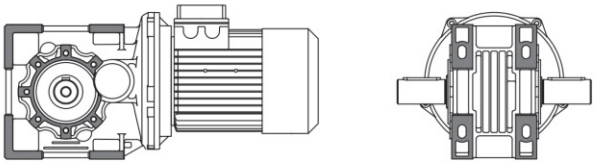

L FISSAGGIO PIEDE / ALBERO CALETTATORE L

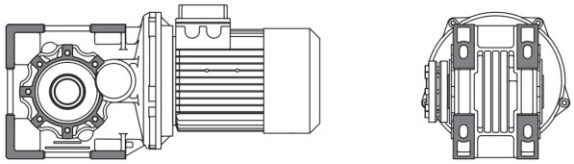

Le grandezze A42 - A52 - A53 non sono disponibili nelle versioni D-S-P.

2.2 TIPOLOGIA

063 - 083 - 103 - 123

FC FISSAGGIO PIEDE / ALBERO CAVO C

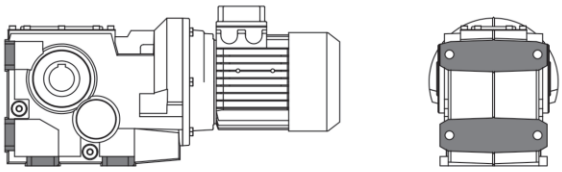

FD FISSAGGIO PIEDE / ALBERO PIENO D

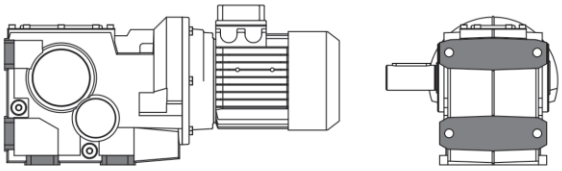

FS FISSAGGIO PIEDE / ALBERO CAVO S

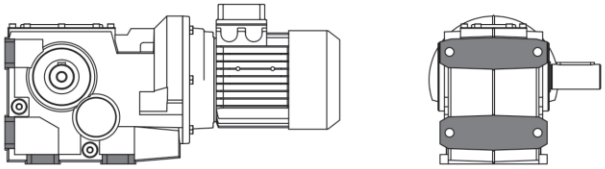

FP FISSAGGIO PIEDE / ALBERO DOPPIO P

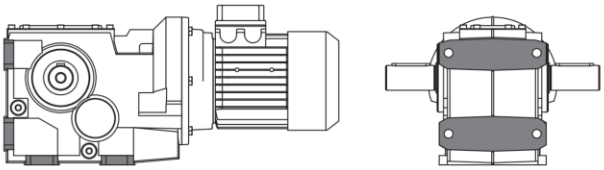

FL FISSAGGIO PIEDE / ALBERO CALETTATORE L

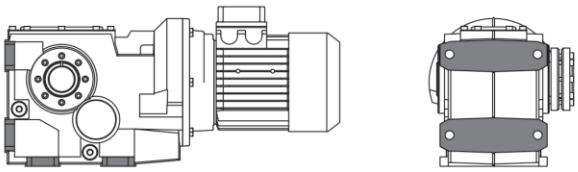

FM FISSAGGIO PIEDE / ALBERO CALETTATORE M

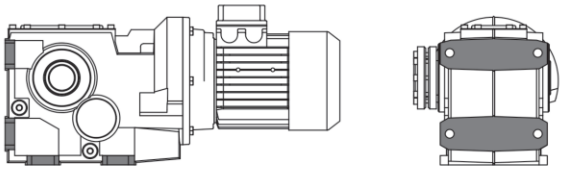

2.2 TIPOLOGIA

063 - 083 - 103 - 123

SC FISSAGIO FLANGIA / ALBERO CAVO C

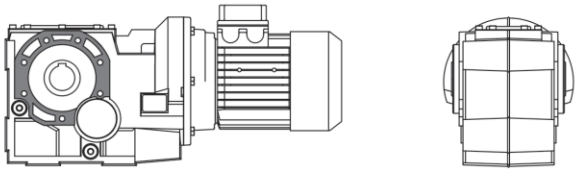

SD FISSAGGIO FLANGIA / ALBERO PIENO D

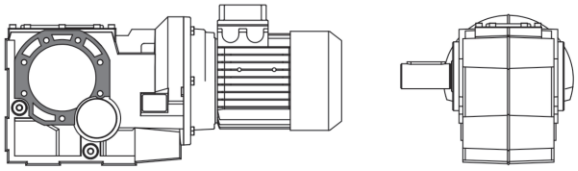

SS FISSAGIO FLANGIA / ALBERO PIENO S

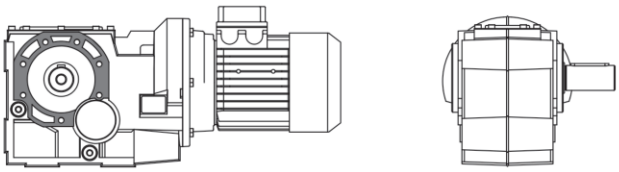

SP FISSAGIO FLANGIA / ALBERO DOPPIO P

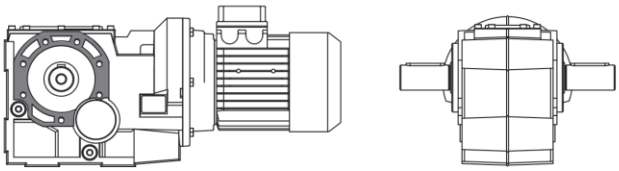

SL FISSAGIO FLANGIA / ALBERO CALETTATORE L

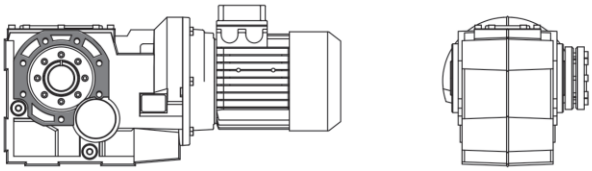

SM FISSAGIO FLANGIA / ALBERO CALETTATORE M

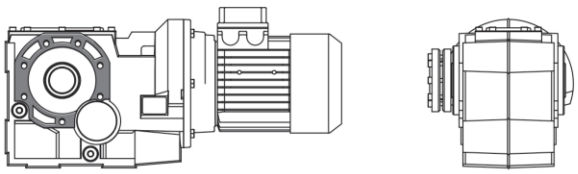

2.2 TIPOLOGIA

063 - 083 - 103 - 123 - 143 - 153 - 163

UC FISSAGGIO PIEDE-FLANGIA / ALBERO CAVO C

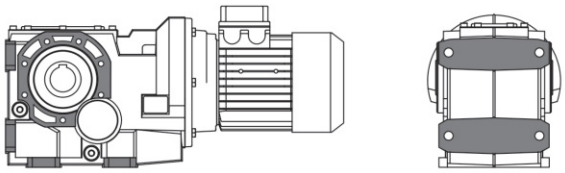

UD FISSAGGIO PIEDE-FLANGIA / ALBERO PIENO D

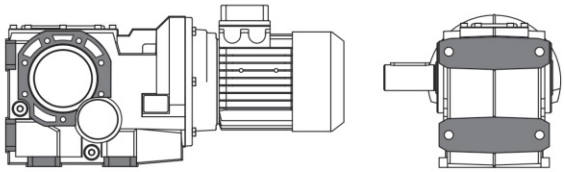

US FISSAGGIO PIEDE-FLANGIA / ALBERO PIENO S

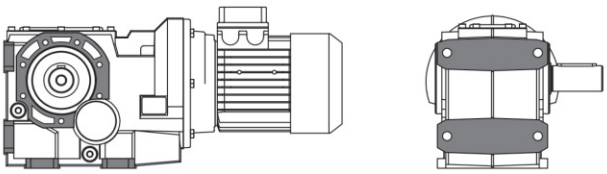

UP FISSAGGIO PIEDE-FLANGIA / ALBERO PIENO P

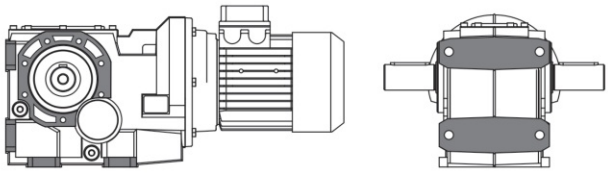

UL FISSAGGIO PIEDE-FLANGIA / ALBERO CALETTATORE L

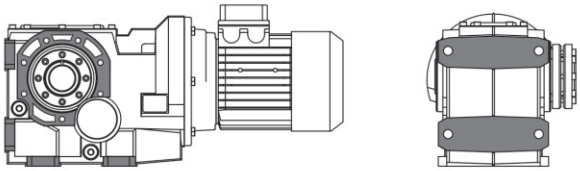

UM FISSAGGIO PIEDE-FLANGIA / ALBERO CALETTATORE M

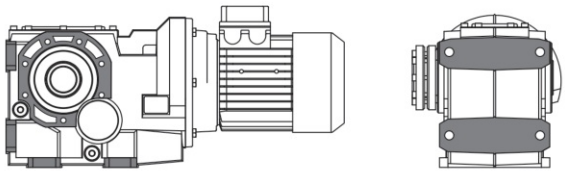

2.2.3 Modularità

BA SERIE IN LEGA D'ALLUMINIO

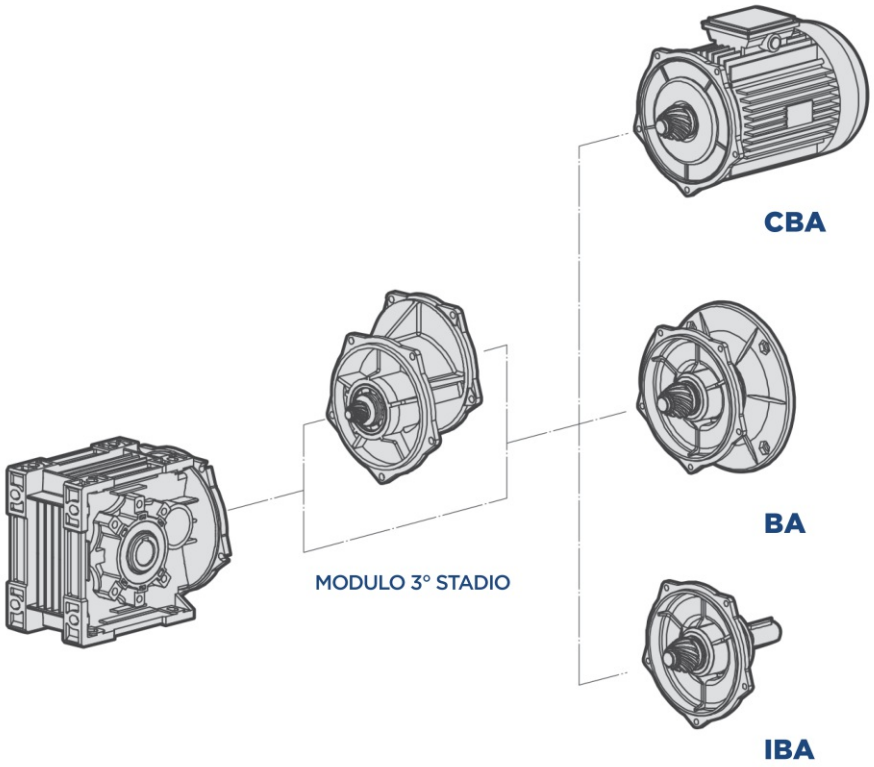

CBA

Versioni con motore elettrico compatto

BA

Versione con predisposizione per attacco motor PAM

IBA

Versioni con albero maschio in ingresso

2.2 TIPOLOGIA

B SERIE IN GHISA GRIGIA

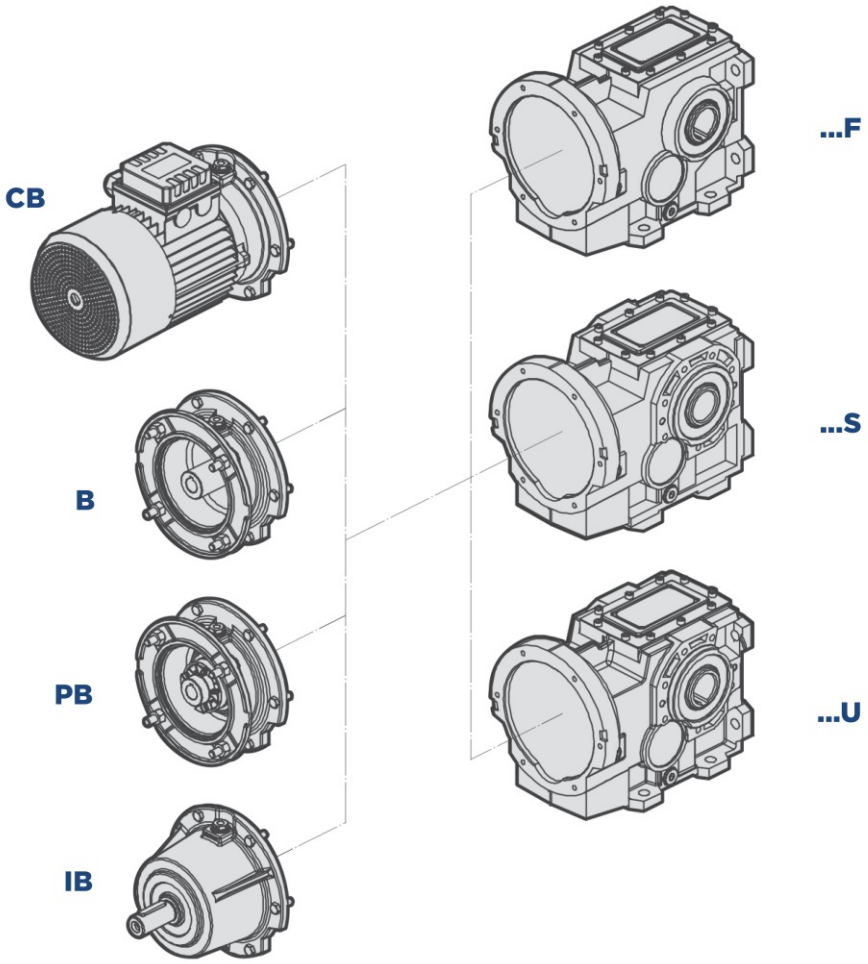

CB

Versioni con motore elettrico compatto

PB

Predisposto per attacco motore con giunto

B

Versione con predisposizione per attacco motore PAM

IB

Versioni con albero maschio in ingresso

2.3 POSIZIONI DI MONTAGGIO

2.3.1 Posizioni di montaggio

La posizione di montaggio identifica l'orientamento del riduttore nello spazio. Quando possibile privilegiare la posizione di montaggio B3, in quanto da un punto di vista tecnico garantisce minor sbattimento d'olio, miglior lubrificazione e minor riscaldamento.

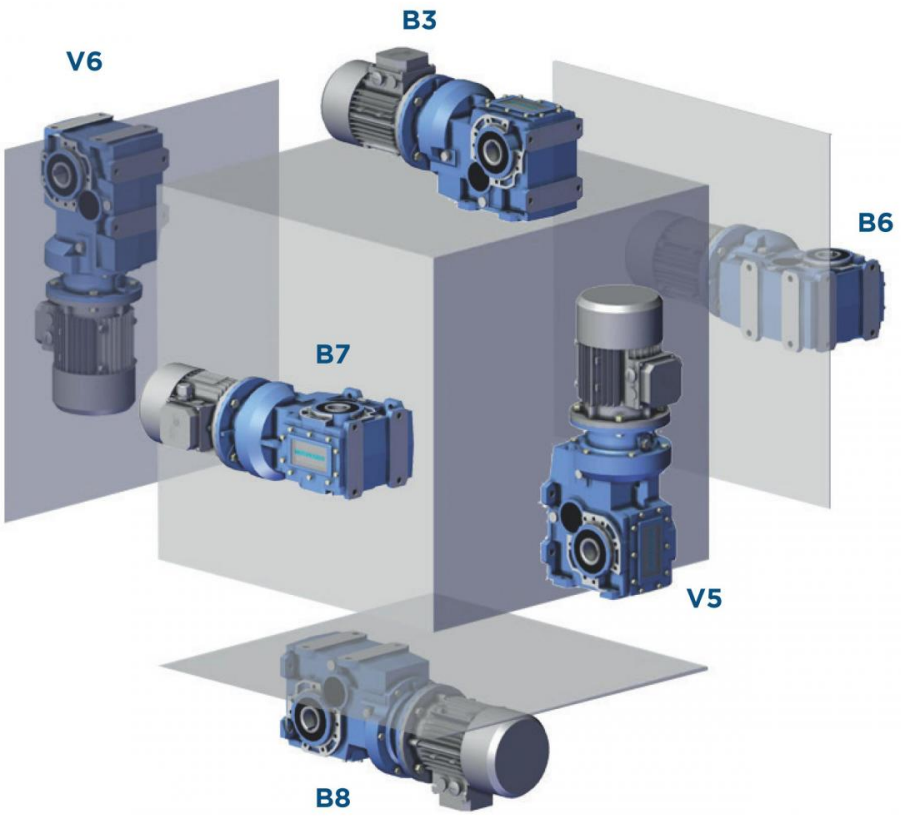

2.3.2 Posizione morsettiera

Se non diversamente specificato in fase d'ordine, il gruppo viene fornito con morsettiera in pos.1.

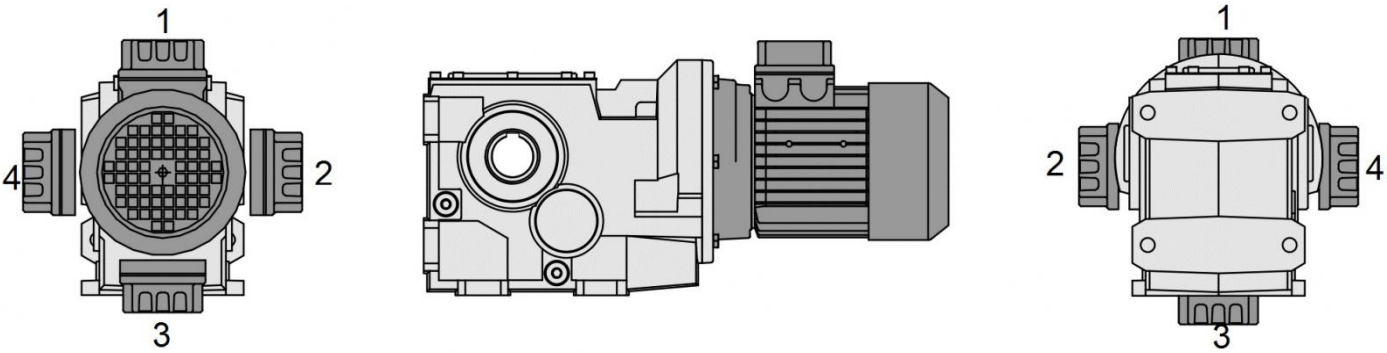

2.4 POTENZA TERMICA

2.4.1 Informazioni

La seguente tabella riporta i valori di potenza termica nominale espressa in [kW] nelle seguenti condizioni di riferimento:

- posizione di montaggio B3
- funzionamento continuo con velocità di entrata <= 1500rpm
- temperatura ambiente di T_{amb}=25°C
- altitudine pari al livello del mare
- velocità dell'aria nell'intorno del riduttore >=1m/s
- assenza di carichi radiali e/o assiali esterni

n_1 = 1500rpm	
	Pth [kW]
B063	10,5
B083	11
B103	12,5
B123	19
B143	22,5
B153	38
B163	55

Applicando al riduttore, nelle suddette condizioni di riferimento, una potenza non superiore a Pth, risultano garantiti la corretta lubrificazione ed il buon funzionamento del riduttore (T olio max=95°C).

NOTA: I riduttori della serie BA non necessitano di verifiche termiche.

2.4.2 Verifica

Verifica della applicazione
Fatta eccezione per tempi di funzionamento continuo inferiori a due ore e successive pause in grado di riportare il riduttore a temperatura ambiente, per ogni applicazione è tassativo eseguire la verifica del limite termico del riduttore, secondo la seguente formula: $\mathbf{P_1 < Pth * Fc * Fv * Fa}$, dove:

- P_1 = potenza in entrata [kW]
- Pth = potenza termica in condizioni di riferimento [kW] (vedi tabella sopra)
- Fc = fattore correttivo di temperatura ambiente e servizio
- Fv = fattore correttivo di aerazione
- Fa = fattore correttivo dell'altitudine

I fattori correttivi sono relativi a condizioni operative differenti da quelle di riferimento, e sono forniti dalle seguenti tabelle ISO14179:

		Servizio a carico per ora di funzionamento %				
	Fc	100	80	70	40	20
Temperatura ambiente °C	10	1,15	1,21	1,32	1,55	2,07
	18	1,07	1,12	1,23	1,44	1,93
	25	1,00	1,05	1,15	1,35	1,80
	30	0,93	0,98	1,07	1,26	1,67
	40	0,83	0,87	0,95	1,12	1,49
	43	0,75	0,79	0,86	1,01	1,35
	50	0,67	0,70	0,77	0,90	1,21

Altitudine (m)	Fa
0*	1
750	0,95
1500	0,9
2250	0,85
3000	0,81

Velocità dell'aria ambientale	Fv
Aria stagnante (<0,5 m/s)	0.75
Installazione al chiuso con lieve aerazione	1
Installazione al chiuso con buona aerazione (>1,4 m/s)	1.4
Installazione all'aperto (>3,7 m/s)	1.9

*Livello del mare
In caso di funzionamento con velocità di ingresso maggiori di 2000rpm, o temperature ambiente maggiori di 40°C è consigliabile contattare il ns servizio di assistenza.

2.5 SENSO DI ROTAZIONE

I riduttori ortogonali vengono forniti di serie con rotazione come da schemi riportati.
A richiesta il senso di rotazione dell'asse lento può essere invertito, specificando rotazione opposta in fase d'ordine.
La rotazione opposta non è disponibile per BA42-BA52-BA53.

SENSO DI ROTAZIONE - ALBERO VELOCE

B-CB-IB A42-A52-A72

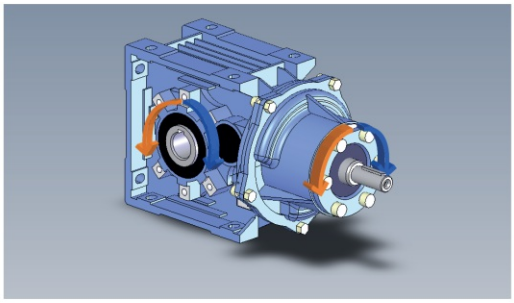

VERSIONI **C-D-P-L**

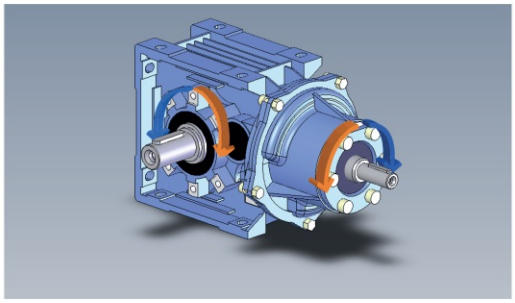

VERSIONE **S**

B-CB-IB A53-A73

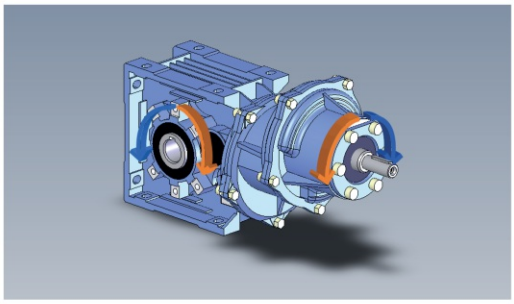

VERSIONI **C-D-P-L**

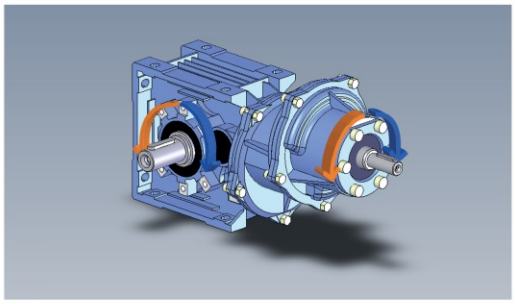

VERSIONE **S**

B-PB-CB-IB 063-163

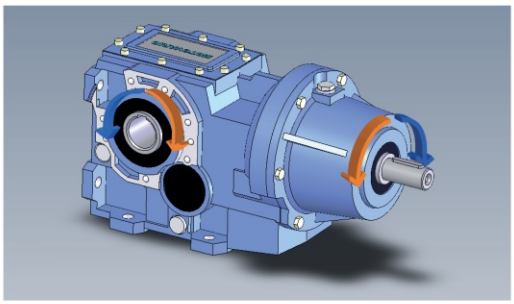

VERSIONI **C-D-P-L**

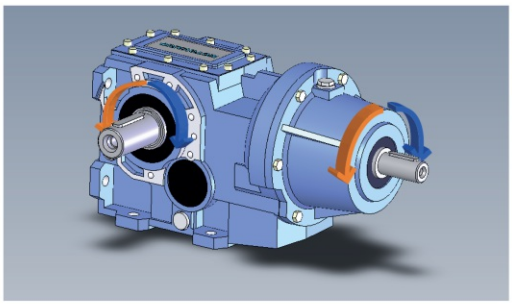

VERSIONE **S-M**

2.6 APPLICAZIONI CRITICHE

2.6.1 Applicazioni critiche

B	A40	A50	A70
2000 < n1 < 3000	✔	✔	✔
V6	B	B	B
n1 > 3000	B	B	B
...L : B6 - B7	B	B	B

B	060	080	100	125	140	150	160
2000 < n1 < 3000	✔	✔	✔	B	B	B	B
V6	B	B	B	B	B	B	B
n1 > 3000	B	B	B	B	A	A	A
...L : B6 - B7	B	B	B	B	B	B	B

✔ Applicazione verificata
A Applicazione sconsigliata
B Verificare l'applicazione e/o contattare il ns. servizio tecnico

Il calettatore è funzionale alla trasmissione del solo momento torcente.
In caso di posizione di montaggio con presenza di carichi radiali e/o assiali, contattare il servizio tecnico.

2.6.2 Informazioni

Le prestazioni indicate a catalogo corrispondono alla posizione B3 o similari, quando cioè il primo stadio non è interamente immerso in olio. Per situazioni di montaggio diverse e/o velocità di ingresso particolari attenersi alle tabelle che evidenziano situazioni critiche diverse per ciascuna grandezza di riduttore. Occorre anche tenere nella giusta considerazione e valutare attentamente le seguenti applicazioni consultando il ns. Servizio Tecnico:

- Utilizzo in servizi che potrebbero risultare pericolosi per l'uomo in caso di rottura del riduttore.
- Evitare l'utilizzo come moltiplicatore.
- Applicazioni con inerzie particolarmente elevate.
- Utilizzo come argano di sollevamento.
- Applicazioni con elevate sollecitazioni dinamiche sulla cassa del riduttore.
- Utilizzo in ambiente con T_{amb} inferiore a -5°C o superiore a 40°C.
- Utilizzo in ambiente con presenza di aggressivi chimici.
- Utilizzo in ambiente salmastro.
- Posizioni di piazzamento non previste a catalogo.
- Utilizzo in ambiente radioattivo.
- Utilizzo in ambiente con pressione diversa da quella atmosferica.

Evitare applicazioni dove è prevista l'immersione, anche parziale, del riduttore.
In presenza di sovraccarichi, dovuti ad avviamenti a pieno carico, frenature, urti ed altre cause statiche e dinamiche, verificare che il picco del momento torcente sia sempre inferiore a 2^*Mn_2.

2.7 DISPONIBILITÀ FLANGE ATTACCO MOTORE

2.7.1 Disponibilità flange attacco motore BA

B10 = Versioni con motore elettrico compatto.

Le tabelle riportano la fattibilità dimensionale degli accoppiamenti. Verificare il fattore di servizio.

	i	063	071	080	090	100	112
CB A42	7,62 ÷ 64,13	B10	B10	B10			
CB A42	78,17	B10	B10				
CB A52	7,91 ÷ 31,63	B10	B10	B10	B10		
CB A52	35,1 ÷ 64,87	B10	B10	B10			
CB A52	79,07	B10	B10				
CB A53	73,7 ÷ 172,53	B10	B10	B10	B10		
CB A53	197,11 ÷ 342,65	B10	B10				
CB A72	8,36 ÷ 22,19				B10	B10	B10
CB A72	27,45 ÷ 40,87			B10	B10	B10	B10
CB A72	45,64 ÷ 67,96			B10	B10		
CB A73	43,89 ÷ 222,93	B10	B10	B10	B10		
CB A73	260,2 ÷ 442,76	B10	B10				

	i	063	071	080	090	100	112
BA42	7,62 ÷ 64,13	B5	B5-B14	B5 - B14			
BA42	78,17	B5	B5-B14				
BA52	7,91 ÷ 31,63	B5	B5-B14	B5-B14	B5-B14		
BA52	35,1 ÷ 64,87	B5	B5-B14	B5-B14			
BA52	79,07	B5	B5-B14				
BA53	73,7 ÷ 172,53	B5	B5-B14	B5-B14	B5-B14		
BA53	197,11 ÷ 342,65	B5	B5-B14				
BA72	8,36 ÷ 22,19				B5-B14	B5-B14	B5-B14
BA72	27,45 ÷ 40,87			B5-B14	B5-B14	B5-B14	B5-B14
BA72	45,64 ÷ 67,96			B5-B14	B5-B14		
BA73	43,89 ÷ 222,93	B5	B5-B14	B5-B14	B5-B14		
BA73	260,2 ÷ 442,76	B5	B5-B14				

2.7 DISPONIBILITÀ FLANGE ATTACCO MOTORE

2.7.2 Disponibilità flange attacco motore B

B11 = Versioni con motore elettrico compatto.

Le tabelle riportano la fattibilità dimensionale degli accoppiamenti. Verificare il fattore di servizio.

*Motore gr.063 non esiste la versione PB.

CB - B - PB 063					
i	*063	071	080	090	100-112
5,71			B5-B11	B5-B11	B5-B11
6,88			B5-B11	B5-B11	B5-B11
7,32		B5-B11	B5-B11	B5-B11	B5-B11
9,16			B5-B11	B5-B11	B5-B11
10,26			B5-B11	B5-B11	B5-B11
11,03			B5-B11	B5-B11	B5-B11
12,35			B5-B11	B5-B11	B5-B11
13,15		B5-B11	B5-B11	B5-B11	B5-B11
15,18		B5-B11	B5-B11	B5-B11	B5-B11
17,00		B5-B11	B5-B11	B5-B11	B5-B11
22,39		B5-B11	B5-B11	B5-B11	B5-B11
26,09			B5-B11	B5-B11	B5-B11
28,03			B5-B11	B5-B11	B5-B11
33,43		B5-B11	B5-B11	B5-B11	B5-B11
38,58		B5-B11	B5-B11	B5-B11	B5-B11
43,22		B5-B11	B5-B11	B5-B11	B5-B11
50,81		B5-B11	B5-B11	B5-B11	B5-B11
56,93		B5-B11	B5-B11	B5-B11	B5-B11
69,16	B5-B11	B5-B11	B5-B11	B5-B11	
77,48	B5-B11	B5-B11	B5-B11	B5-B11	
90,33	B5-B11	B5-B11	B5-B11		
101,20	B5-B11	B5-B11	B5-B11		
111,74	B5-B11	B5-B11	B5-B11		
124,20	B5-B11	B5-B11	B5-B11		
139,15	B5-B11	B5-B11	B5-B11		
157,42	B5-B11	B5-B11	B5-B11		

CB - B - PB 083					
i	080	090	100	112	132
7,81	B5-B11	B5-B11	B5-B11	B5-B11	B5-B11
8,62	B5-B11	B5-B11	B5-B11	B5-B11	B5-B11
10,49	B5-B11	B5-B11	B5-B11	B5-B11	B5-B11
11,59	B5-B11	B5-B11	B5-B11	B5-B11	B5-B11
14,43	B5-B11	B5-B11	B5-B11	B5-B11	B5-B11
16,60	B5-B11	B5-B11	B5-B11	B5-B11	B5-B11
18,32	B5-B11	B5-B11	B5-B11	B5-B11	B5-B11
22,82	B5-B11	B5-B11	B5-B11	B5-B11	B5-B11
26,71	B5-B11	B5-B11	B5-B11	B5-B11	B5-B11
29,50	B5-B11	B5-B11	B5-B11	B5-B11	B5-B11
31,80	B5-B11	B5-B11	B5-B11	B5-B11	B5-B11
34,49	B5-B11	B5-B11	B5-B11	B5-B11	B5-B11
39,60	B5-B11	B5-B11	B5-B11	B5-B11	B5-B11
42,95	B5-B11	B5-B11	B5-B11	B5-B11	B5-B11
45,44	B5-B11	B5-B11	B5-B11	B5-B11	B5-B11
51,19	B5-B11	B5-B11	B5-B11	B5-B11	B5-B11
55,52	B5-B11	B5-B11	B5-B11	B5-B11	B5-B11
59,96	B5-B11	B5-B11	B5-B11	B5-B11	B5-B11
63,74	B5-B11	B5-B11	B5-B11	B5-B11	B5-B11
69,14	B5-B11	B5-B11	B5-B11	B5-B11	B5-B11
73,14	B5-B11	B5-B11	B5-B11	B5-B11	B5-B11
80,76	B5-B11	B5-B11	B5-B11	B5-B11	B5-B11
92,19	B5-B11	B5-B11	B5-B11	B5-B11	
100,57	B5-B11	B5-B11	B5-B11	B5-B11	B5-B11
105,29	B5-B11	B5-B11	B5-B11	B5-B11	
116,25	B5-B11	B5-B11	B5-B11	B5-B11	
126,76	B5-B11	B5-B11	B5-B11	B5-B11	
144,77	B5-B11	B5-B11	B5-B11	B5-B11	

2.7 DISPONIBILITÀ FLANGE ATTACCO MOTORE

CB - B - PB 103						
i	080	090	100	112	132	160
8,13	B5-B11	B5-B11	B5-B11	B5-B11	B5-B11	B5
8,97	B5-B11	B5-B11	B5-B11	B5-B11	B5-B11	B5
10,92	B5-B11	B5-B11	B5-B11	B5-B11	B5-B11	B5
12,05	B5-B11	B5-B11	B5-B11	B5-B11	B5-B11	B5
14,99	B5-B11	B5-B11	B5-B11	B5-B11	B5-B11	B5
17,27	B5-B11	B5-B11	B5-B11	B5-B11	B5-B11	B5
19,06	B5-B11	B5-B11	B5-B11	B5-B11	B5-B11	B5
23,70	B5-B11	B5-B11	B5-B11	B5-B11	B5-B11	B5
26,51	B5-B11	B5-B11	B5-B11	B5-B11	B5-B11	B5
30,55	B5-B11	B5-B11	B5-B11	B5-B11	B5-B11	B5
33,07	B5-B11	B5-B11	B5-B11	B5-B11	B5-B11	
35,87	B5-B11	B5-B11	B5-B11	B5-B11	B5-B11	
41,12	B5-B11	B5-B11	B5-B11	B5-B11	B5-B11	
44,61	B5-B11	B5-B11	B5-B11	B5-B11	B5-B11	
47,28	B5-B11	B5-B11	B5-B11	B5-B11	B5-B11	
50,24	B5-B11	B5-B11	B5-B11	B5-B11	B5-B11	
53,02	B5-B11	B5-B11	B5-B11	B5-B11	B5-B11	
58,50	B5-B11	B5-B11	B5-B11	B5-B11	B5-B11	
64,89	B5-B11	B5-B11	B5-B11	B5-B11	B5-B11	
68,58	B5-B11	B5-B11	B5-B11	B5-B11	B5-B11	
72,76	B5-B11	B5-B11	B5-B11	B5-B11	B5-B11	
78,92	B5-B11	B5-B11	B5-B11	B5-B11	B5-B11	
83,66	B5-B11	B5-B11	B5-B11	B5-B11	B5-B11	
92,31	B5-B11	B5-B11	B5-B11	B5-B11	B5-B11	
105,44	B5-B11	B5-B11	B5-B11	B5-B11		
114,80	B5-B11	B5-B11	B5-B11	B5-B11	B5-B11	
120,42	B5-B11	B5-B11	B5-B11	B5-B11		
132,87	B5-B11	B5-B11	B5-B11	B5-B11		
144,69	B5-B11	B5-B11	B5-B11	B5-B11		
165,25	B5-B11	B5-B11	B5-B11	B5-B11		

CB - B - PB 123						
i	090	100	112	132	160	180
7,97				B5-B11	B5	B5
9,62				B5-B11	B5	B5
10,33				B5-B11	B5	B5
12,48				B5-B11	B5	B5
13,84				B5-B11	B5	B5
15,38				B5-B11	B5	B5
18,58				B5-B11	B5	B5
20,61				B5-B11	B5	B5
22,78				B5-B11	B5	B5
25,89		B5-B11	B5-B11	B5-B11	B5	B5
27,51				B5-B11	B5	B5
30,79				B5-B11	B5	B5
31,26		B5-B11	B5-B11	B5-B11	B5	B5
34,68		B5-B11	B5-B11	B5-B11	B5	B5
40,53		B5-B11	B5-B11	B5-B11	B5	B5
44,89		B5-B11	B5-B11	B5-B11	B5	B5
49,80		B5-B11	B5-B11	B5-B11	B5	B5
54,30		B5-B11	B5-B11	B5-B11	B5	B5
59,36		B5-B11	B5-B11	B5-B11	B5	B5
62,59		B5-B11	B5-B11	B5-B11	B5	B5
69,43		B5-B11	B5-B11	B5-B11	B5	B5
74,42		B5-B11	B5-B11	B5-B11	B5	B5
80,04	B5-B11	B5-B11	B5-B11	B5-B11		
89,87		B5-B11	B5-B11	B5-B11	B5	B5
99,70		B5-B11	B5-B11	B5-B11	B5	B5
106,65	B5-B11	B5-B11	B5-B11	B5-B11		
119,60	B5-B11	B5-B11	B5-B11	B5-B11		
129,96	B5-B11	B5-B11	B5-B11	B5-B11		
144,43	B5-B11	B5-B11	B5-B11	B5-B11		
160,23	B5-B11	B5-B11	B5-B11	B5-B11		
180,40	B5-B11	B5-B11	B5-B11	B5-B11		

2.7 DISPONIBILITÀ FLANGE ATTACCO MOTORE

CB - B - PB 143						
i	100	112	132	160	180	200
10,84			B5-B11	B5	B5	B5
11,87			B5-B11	B5	B5	B5
14,49			B5-B11	B5	B5	B5
17,04			B5-B11	B5	B5	B5
18,66			B5-B11	B5	B5	B5
21,00			B5-B11	B5	B5	B5
22,77			B5-B11	B5	B5	B5
25,63			B5-B11	B5	B5	B5
27,44	B5-B11	B5-B11	B5-B11	B5	B5	B5
30,05	B5-B11	B5-B11	B5-B11	B5	B5	B5
33,01			B5-B11	B5	B5	B5
36,67	B5-B11	B5-B11	B5-B11	B5	B5	B5
40,29			B5-B11	B5	B5	B5
44,16	B5-B11	B5-B11	B5-B11	B5	B5	B5
48,35	B5-B11	B5-B11	B5-B11	B5	B5	B5
53,16	B5-B11	B5-B11	B5-B11	B5	B5	B5
54,63	B5-B11	B5-B11	B5-B11	B5	B5	B5
59,02	B5-B11	B5-B11	B5-B11	B5	B5	B5
64,88	B5-B11	B5-B11	B5-B11	B5	B5	B5
70,43	B5-B11	B5-B11	B5-B11	B5	B5	
77,12	B5-B11	B5-B11	B5-B11	B5	B5	
85,54	B5-B11	B5-B11	B5-B11	B5	B5	B5
94,13	B5-B11	B5-B11	B5-B11	B5	B5	
105,83	B5-B11	B5-B11	B5-B11			
111,94	B5-B11	B5-B11	B5-B11	B5	B5	
124,62	B5-B11	B5-B11	B5-B11	B5	B5	
136,44	B5-B11	B5-B11	B5-B11	B5	B5	
149,59	B5-B11	B5-B11	B5-B11	B5	B5	
166,53	B5-B11	B5-B11	B5-B11	B5	B5	
187,24	B5-B11	B5-B11	B5-B11			

CB - B - PB 153					
i	132	160	180	200	225
10,49		B5	B5	B5	B5
12,64		B5	B5	B5	B5
14,01		B5	B5	B5	B5
15,40		B5	B5	B5	B5
18,56		B5	B5	B5	B5
20,56		B5	B5	B5	B5
23,86		B5	B5	B5	B5
25,19	B5	B5	B5	B5	B5
28,23	B5	B5	B5	B5	B5
30,35	B5	B5	B5	B5	B5
33,63	B5	B5	B5	B5	B5
35,02		B5	B5	B5	B5
38,81		B5	B5	B5	B5
42,30	B5	B5	B5	B5	B5
47,53	B5	B5	B5	B5	B5
50,56	B5	B5	B5	B5	B5
54,64	B5	B5	B5	B5	B5
57,27	B5	B5	B5	B5	B5
60,92	B5	B5	B5	B5	B5
63,47	B5	B5	B5	B5	B5
71,10	B5	B5	B5		
77,22	B5	B5	B5	B5	B5
83,90	B5	B5	B5		
87,70	B5	B5	B5		
93,05	B5	B5	B5	B5	B5
103,12	B5	B5	B5	B5	B5
123,90	B5	B5	B5		
134,30	B5	B5	B5		
149,30	B5	B5	B5		
165,40	B5	B5	B5		

CB - B - PB 163						
i	160	180	200	225	250	280
8,89		B5	B5	B5	B5	B5
10,58		B5	B5	B5	B5	B5
11,87		B5	B5	B5	B5	B5
12,81		B5	B5	B5	B5	B5
14,08		B5	B5	B5	B5	B5
15,52		B5	B5	B5	B5	B5
16,39		B5	B5	B5	B5	B5
18,02	B5	B5	B5	B5	B5	B5
19,96	B5	B5	B5	B5	B5	
21,94	B5	B5	B5	B5	B5	B5
24,17	B5	B5	B5	B5	B5	B5
26,58	B5	B5	B5	B5	B5	B5
28,80	B5	B5	B5	B5	B5	
30,92	B5	B5	B5	B5	B5	B5
34,25	B5	B5	B5	B5	B5	
37,66	B5	B5	B5	B5	B5	
40,65	B5	B5	B5	B5	B5	
45,09	B5	B5	B5	B5	B5	
51,00	B5	B5	B5	B5	B5	
53,63	B5	B5	B5	B5	B5	
58,97	B5	B5	B5	B5	B5	
69,78	B5	B5	B5	B5		
76,72	B5	B5	B5			
87,54	B5	B5	B5			
96,25	B5	B5	B5			
103,93	B5	B5	B5			
114,27	B5	B5				
126,29	B5	B5				
138,85	B5	B5				
154,83	B5	B5				

2.8 CUSCINETTI ASSE LENTO

BA		BA40		BA50		BA70	
Versione (*)		Standard	A richiesta	Standard	A richiesta	Standard	A richiesta
U	C	1	/	1	/	1	/
	D/S/P	/	/	/	/	1	/
	L/M	1	/	1	/	1	/

(*) NB. Le grandezze A42 - A52 - A53 non sono disponibili nelle versioni D-S-P.

B		B060		B080		B100/125		B140/150/160	
Versione		Standard	A richiesta	Standard	A richiesta	Standard	A richiesta	Standard	A richiesta
U	C	2	/	2 (Ø40)	1 (Ø45)	2	/	2	/
	D/S/P	2	/	2	/	2	/	2	/
	L/M	1	/	1	/	1	/	2	/
F/S	C	1	2	1	2	1	2	/	/
	D/S/P	2	/	2	/	2	/	/	/
	L/M	1	/	1	/	1	/	/	/

1 - Cuscinetti a sfera

2 - Cuscinetti a rulli conici

/ - Non Disponibile

2.9 CARICHI RADIALI

2.9.1 Informazioni

Il valore del carico radiale [N] ammissibile viene riportato nelle tabelle relative alle prestazioni del riduttore in esame, ed è relativo al carico applicato sulla mezzeria dell'albero e nelle condizioni più sfavorevoli come angolo di applicazione e senso di rotazione. I carichi assiali massimi ammissibili sono 1/5 del valore del carico radiale indicato quando sono applicati in combinazione col carico radiale stesso. Nelle tabelle relative agli alberi di uscita viene indicato il valore massimo ammissibile, questo valore non deve mai essere superato in quanto è relativo alla resistenza della cassa. Possono essere verificate condizioni particolari di carico radiale superiori ai limiti di catalogo, in questo caso contattare il ns. Servizio Tecnico e fornire tutti i dati applicativi: direzione del carico, senso di rotazione dell'albero, tipo di servizio. Nel caso di alberi bisporgenti e cavi in cui è previsto l'applicazione di carichi radiali su entrambe le estremità, i carichi massimi ammissibili sono da definire in funzione delle condizioni di esercizio specifiche, in questo caso contattare il ns. Servizio Tecnico. Il carico radiale sull'albero si calcola con la seguente formula: **Fre=(2000*M*fz)/D≤Fr1 o Fr2**

- **Fre** [N] Carico radiale risultante
- **M** [Nm] Momento torcente sull'albero
- **D** [mm] Diametro dell'elemento di trasmissione montato sull'albero
- **Fr1**-**Fr2** [N] Valore di carico radiale massimo ammesso (ved. tab. relative)
- **fz** = 1,1 pignone dentato - 1,4 ruota per catena - 1,7 puleggia a gola - 2,5 puleggia piana

2.9.2 Entrata

Con carico radiale risultante non in mezzeria dell'albero, correggere il carico radiale ammissibile Fr1 con la formula: **Frx=(Fr1*a)/(b+x)**

- **a** , **b** = valori riportati nelle tabelle
- **x** = distanza del punto di applicazione del carico dallo spallamento dell'albero

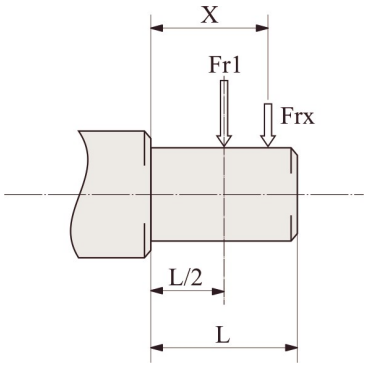

IB	A42 A52 A53 A73	A72
a	84	89
b	64	69
Fr1 max (**)	500	830

IB	063	083	103	123	143	153	163
a	105	137	137	175	175	225	221
b	80	108	108	135	135	170	166
Fr1 max (**)	2200	2500	3200	4200	7000	10000	12000

(**Fr1 max) Valore massimo ammissibile dal riduttore in condizioni statiche e/o per funzionamenti limitati. Per carichi radiali in servizio continuativo verificare i valori delle tabelle prestazionali calcolati in funzione della carcassa, dell'albero e dei cuscinetti.

2.9.3 Uscita

Con carico radiale risultante non in mezzeria dell'albero, correggere il carico radiale ammissibile Fr2 con la formula: **Frx=(Fr2*a)/(b+x)**

- **a** , **b** = valori riportati nelle tabelle
- **x** = distanza del punto di applicazione del carico dallo spallamento dell'albero

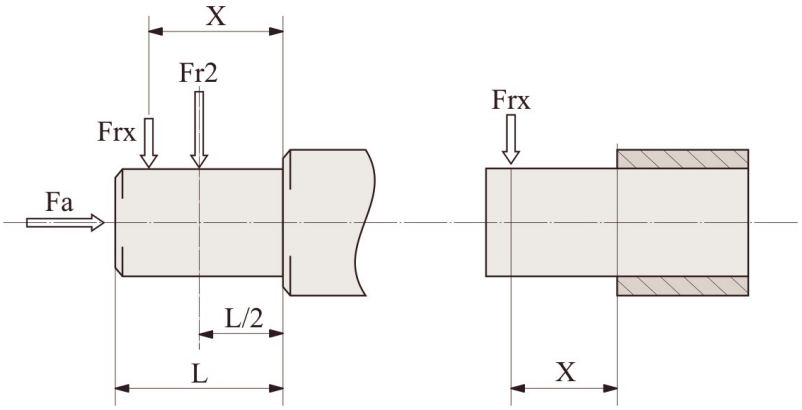

B	A42	A52 A53	A72 A73
a	105	119	145
b	85	94	116
D-S-P (Fr2 max **)	-	-	10000
C (Fr2 max **)	4000	4000	5500

B	063	083	103	123	143	153	163
a	129	190	225	262	306	348	468
b	100	150	175	202	236	278	363
D-S-P (Fr2 max **)	12000	18000	22000	30000	40000	65000	80000
C (Fr2 max **)	8000	12000	15000	20000	40000	65000	65000

(**Fr2 max) Valore massimo ammissibile dal riduttore in condizioni statiche e/o per funzionamenti limitati. Per carichi radiali in servizio continuativo verificare i valori delle tabelle prestazionali calcolati in funzione della carcassa, dell'albero e dei cuscinetti.

2.10 LUBRIFICAZIONE

2.10.1 Informazioni

Nei casi con temperature ambiente non previste in tabella contattare il ns. Servizio Tecnico. In caso di temperature inferiori a -30°C o superiori a 60°C occorre utilizzare anelli di tenuta con mescole speciali. Per i campi di funzionamento con temperature inferiori a 0°C occorre considerare quanto segue:

1. I motori devono essere idonei al funzionamento con temperatura ambiente prevista.
2. La potenza del motore elettrico deve essere adeguata al superamento delle maggiori coppie di avviamento richieste.
3. Nel caso di riduttori con cassa in ghisa prestare attenzione ai carichi d'urto in quanto la ghisa può presentare problemi di fragilità a temperature inferiori ai -15°C.
4. Durante le prime fasi di servizio possono insorgere problemi di lubrificazione causa l'elevata viscosità che assume l'olio e quindi è opportuno procedere ad alcuni minuti di funzionamento a "vuoto".

Il cambio olio (prodotti NON Atex) deve essere eseguito dopo circa 10.000 ore/2 anni di funzionamento, questo periodo è in funzione del tipo di servizio e dell'ambiente in cui opera il riduttore. Per i gruppi forniti senza tappi per l'olio la lubrificazione si intende permanente e quindi non hanno necessità di alcuna manutenzione.

2.10.2 Lubrificanti

Specifiche dei lubrificanti consigliati da Motovario.
Tutti i gruppi sono forniti con olio ENI BLASIA 220, salvo diversa richiesta.

	B063 ÷ 163		BA42 ÷ A72/3
	Olio minerale		Olio minerale
T_{amb}°C ISO/SAE	(-5) ÷ (+40) ISO VG220	(-15) ÷ (+25) ISO VG150	(-5) ÷ (+40) SAE 85W-140
ENI	BLASIA 220	BLASIA 150	ROTRA MP (85W-140)
SHELL	OMALA OIL220	OMALA OIL150	SPIRAX S2 A 85W-140
KLUBER	Kluberoil GEM 1-220N	Kluberoil GEM 1-150N	Klubersynth GH 6-460
MOBIL	MOBILGEAR 600 XP220	MOBILGEAR 600 XP150	-
CASTROL	ALPHA SP 220	ALPHA SP 150	-
BP	ENERGOL GR-XP220	ENERGOL GR-XP150	-

2.10 LUBRIFICAZIONE

2.10.3 Lubrificanti speciali

	T_{amb}°C	Olio sintetico a basi di poliglicoli
ENI	**(-30) ÷ (+30)**	Blasia S 150 (ISO VG150)
	(-20) ÷ (+40)	Blasia S 220 (ISO VG220)
MOBIL	**(-45) ÷ (+0)**	SCH 624 (ISO VG32)
	(-40) ÷ (+5)	SCH 626 (ISO VG68)
KLUBER	**(-40) ÷ (+5)**	Klubersynth GH 6-32 (ISO VG32)
	(-35) ÷ 10)	Klubersynth GH 6-80 (ISO VG80)
	(-30) ÷ (+40)	Klubersynth GH 6-150 (ISO VG150)
	(-25) ÷ (+40)	Klubersynth GH 6-220 (ISO VG220)
	(-15) ÷ (+50)	Klubersynth GH 6-460 (ISO VG460)
	(-10) ÷ (+70)	Klubersynth GH 6-680 (ISO VG680)

	T_{amb}°C	Olio sintetico a basi di poliglicoli per settore alimentare
KLUBER	**(-30) ÷ (+15)**	Klubersynth UH1-6 100 (ISO VG100)
	(-25) ÷ (+40)	Klubersynth UH1-6 220 (ISO VG220)
	(-15) ÷ (+40)	Klubersynth UH1-6 320 (ISO VG320)
	(-15) ÷ (+50)	Klubersynth UH1-6 460 (ISO VG460)
	(-10) ÷ (+50)	Klubersynth UH1-6 680 (ISO VG680)

Per l'utilizzo di lubrificanti speciali, contattare l'assistenza tecnica.

2.10.4 Quantità

- Per i riduttori della serie B occorre sempre specificare la posizione di montaggio prevista.
- I riduttori della serie BA.. a 2, 3 stadi e B060, vengono forniti completi di lubrificante, sono sprovvisti dei tappi olio e non hanno necessità di alcuna manutenzione.
- I riduttori della serie B nelle grandezze 080, 100, 125, 140, 150, 160 vengono forniti completi di lubrificante e dei tappi olio necessari a garantire la corretta lubrificazione nella posizione di montaggio richiesta.

Si raccomanda, effettuata l'installazione, di sostituire il tappo chiuso, utilizzato per il trasporto, con il tappo di sfiato fornito a corredo.
Le quantità di olio in tabella (litri ~) sono solo indicative e per il corretto riempimento si dovrà fare riferimento al tappo di livello o all'astina di livello, se presente. Eventuali scostamenti di livello possono dipendere da tolleranze costruttive ma anche dal piazzamento del gruppo o dal piano di montaggio presso cliente. Per tale motivo è opportuno che il cliente verifichi e, se necessario, ristabilisca il livello a gruppo installato.

B	A42	A52	A53	A72	A73
B3	0,33	0,42	0,63	1	1,21
B8					
B6/B7					
V5					
V6					

CB	A42	A52	A53	A72	A73
B3	0,33	0,42	0,55	1	1,13
B8					
B6/B7					
V5					
V6					

B-CB	063	083	103	123	143	153	163
B3	1,2	2,5	3,7	5,7	11,1	19	33
B8	1,5	2,8	4,2	7,9	13	17,5	42,8
B6	1,5	3,5	6	8,5	14,5	26	43
B7	1,5	2,8	3,9	7,3	11,8	19	30
V5	2,1	3,7	7	9,9	18,5	32,5	54,5
V6	1,3	2,6	4,5	6,7	10,8	16,5	37,3

2.11 MOMENTI D'INERZIA

I seguenti valori di momento d'inerzia J_1 sono solo indicativi, riferiti al massimo di quelli calcolati, e sono riferiti all'albero di entrata del riduttore.

BA-2/3	J_1 [Kg*m^2]
A42	0,0011
A52/A53	0,0012
A72/A73	0,0034

B	J_1 [Kg*m^2]
063	0,0011
083	0,0025
103	0,007
123	0,01
143	0,023
153	0,0348
163	0,0929

3.1.1 BA.2

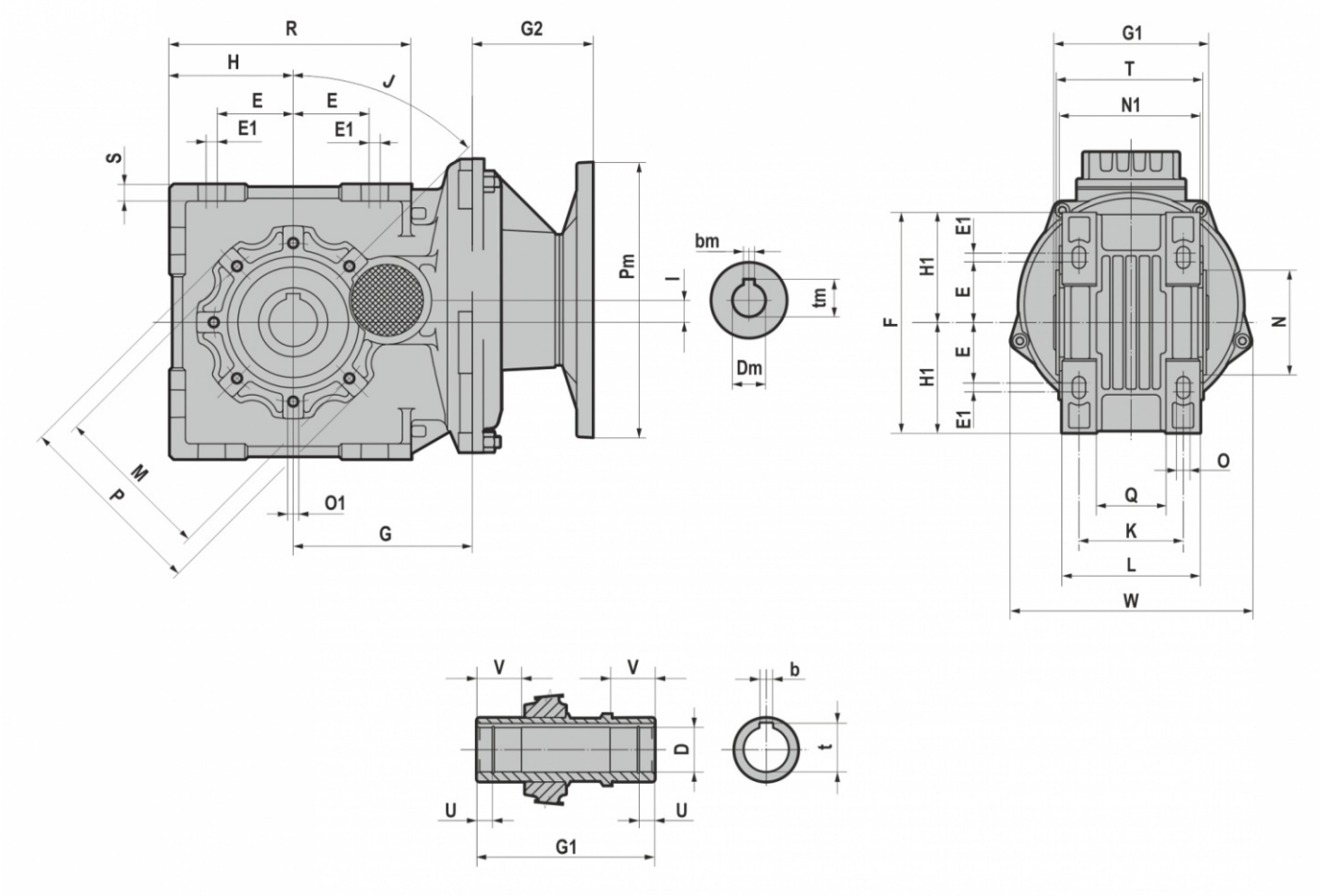

	D H7	b	t	U	V	E	E1	F	G	G1	H	H1	I	J	K	L	M	N	N1	O	O1	P	Q	R	S	T	W
BA42	20	6	22,8	/	30	45	/	130	95	100	65	65	8	45	73,5	90	85	70	92	9	M8x12 n.4	100	45	127,5	8	97	152
BA52	25	8	28,3	/	30	55	/	160	98	112	80	80	4,2	45	80	100	95	80	102	9	M8x14 n.6	110	51	153	10	108	152
	28	8	31,1																								
BA72	35	10	38,3	12	35	55	8	200	129,5	140	90	100	16	45	94,5	125	115	95	130	12	M8x14 n.7	136	63	175	12	136	218
	30	8	33,3																								

			G2	
IEC	Pm x Dm	Pm x Dm	BA42-BA52	BA72
063	**140x11**	**090x11**	55	/
071	**160x14**	**105x14**	55	/
080	**200x19**	**120x19**	86	87,5
090	**200x24**	**140x24**	86	87,5
100-112	**250x28**	**160x28**	/	87,5

B5	Pm	Dm	bm	tm
063	140	11	4	12,8
071	160	14	5	16,3
080	200	19	6	21,8
090	200	24	8	27,3
100	250	28	8	31,3
112	250	28	8	31,3

B14	Pm	Dm	bm	tm
063	90	11	4	12,8
071	105	14	5	16,3
080	120	19	6	21,8
090	140	24	8	27,3
100	160	28	8	31,3
112	160	28	8	31,3

3.1.2 BA.3

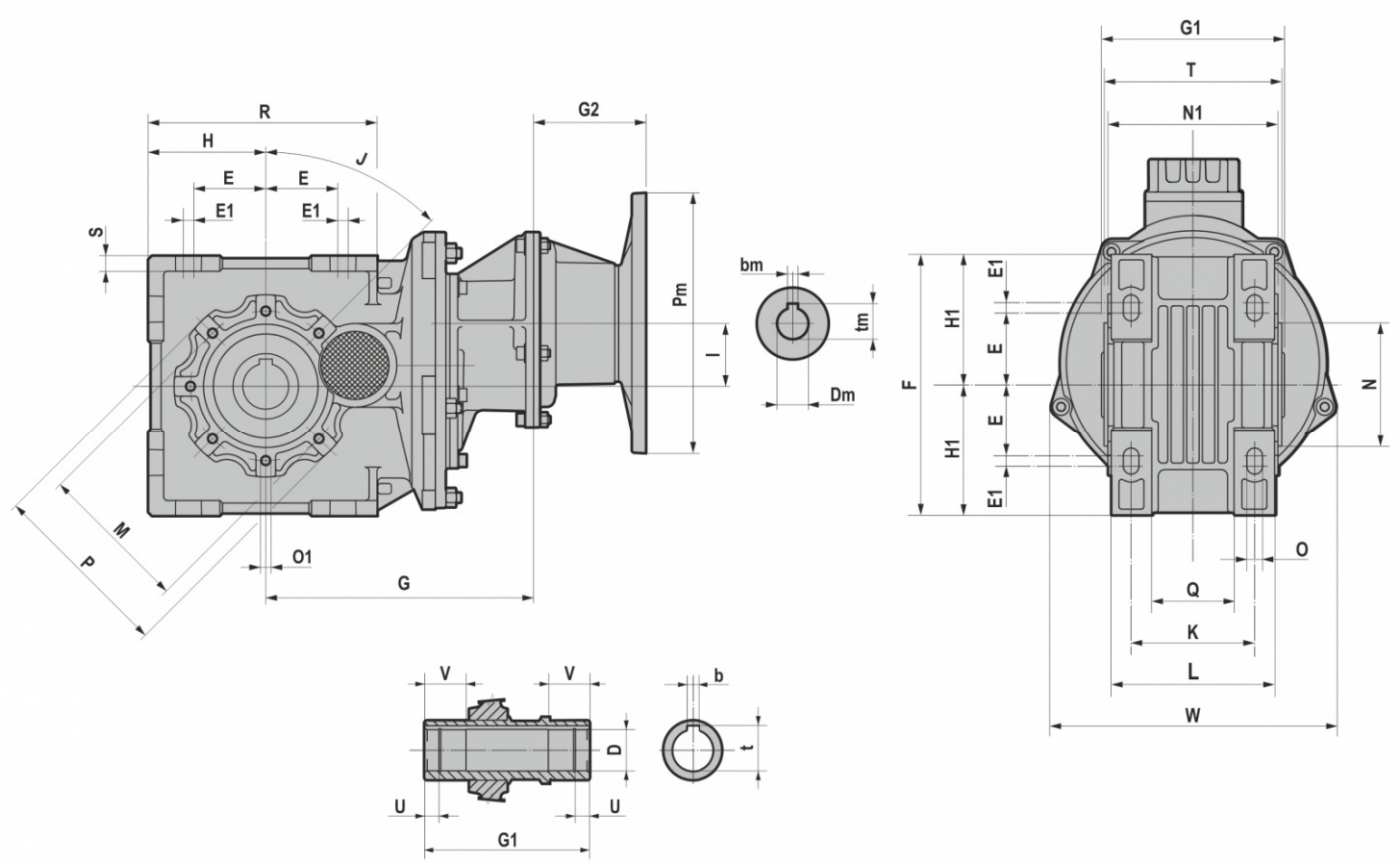

	D H7	b	t	U	V	E	E1	F	G	G1	H	H1	I	J	K	L	M	N	N1	O	O1	P	Q	R	S	T	W
BA53	25	8	28,3	/	30	55	/	160	162	112	80	80	36,2	45	80	100	95	80	102	9	M8x14 n.6	110	51	153	10	108	152
	28	8	31,1																								
BA73	35	10	38,3	12	35	55	8	200	204,5	140	90	100	48	45	94,5	125	115	95	130	12	M8x14 n.7	136	63	175	12	136	218
	30	8	33,3																								

			G2
IEC	Pm x Dm	Pm x Dm	BA53-BA73
063	**140X11**	**090x11**	55
071	**160X14**	**105x14**	55
080	**200X19**	**120x19**	86
090	**200X24**	**140x24**	86

B5	Pm	Dm	bm	tm
063	140	11	4	12,8
071	160	14	5	16,3
080	200	19	6	21,8
090	200	24	8	27,3
100	250	28	8	31,3
112	250	28	8	31,3

B14	Pm	Dm	bm	tm
063	90	11	4	12,8
071	105	14	5	16,3
080	120	19	6	21,8
090	140	24	8	27,3
100	160	28	8	31,3
112	160	28	8	31,3

3.1.3 CBA.2

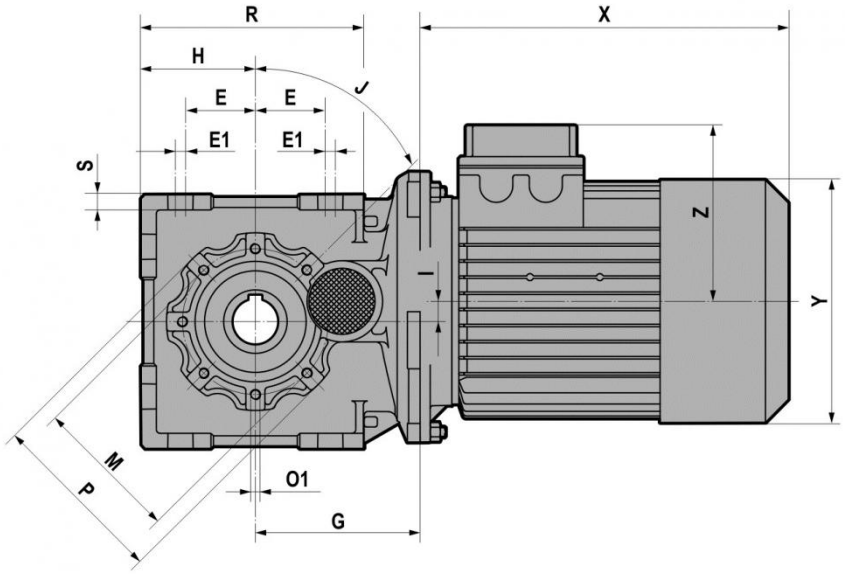

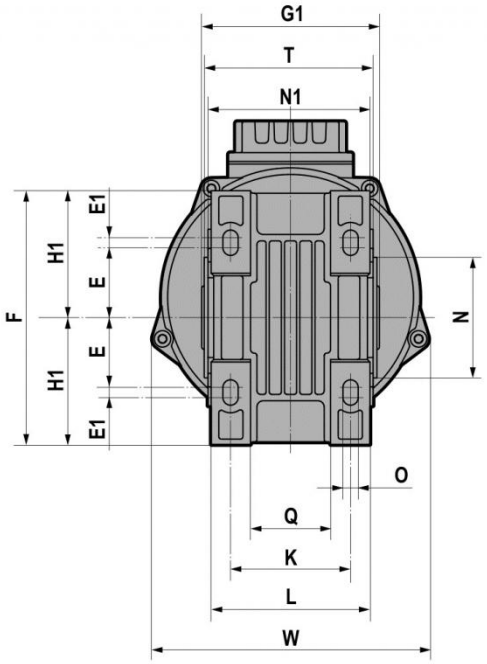

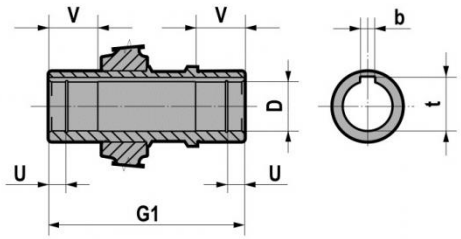

	D H7	b	t	U	V	E	E1	F	G	G1	H	H1	I	J	K	L	M	N	N1	O	O1	P	Q	R	S	T	W
CBA42	20	6	22,8	/	30	45	/	130	95	100	65	65	8	45	73,5	90	85	70	92	9	M8x12 n.4	100	45	127,5	8	97	152
CBA52	25	8	28,3	/	30	55	/	160	98	112	80	80	4,2	45	80	100	95	80	102	9	M8x14 n.6	110	51	153	10	108	152
	28	8	31,1																								
CBA72	35	10	38,3	12	35	55	8	200	129,5	140	90	100	16	45	94,5	125	115	95	130	12	M8x14 n.7	136	63	175	12	136	218
	30	8	33,3																								

T (IE1 - IE2)								
		063	071	080	090S	090L	100	112
CBA42 CBA52	X	180	205	223	237	262	/	/
	Y	121	139	158	173	173	/	/
	Z	104	112	122	130	130	/	/
CBA72	X	/	/	218	232	257	290	302
	Y	/	/	158	173	173	191	211
	Z	/	/	122	130	130	139	154

TB (IE1 - IE2)								
		063	071	080	090S	090L	100	112
CBA42 CBA52	X	238	270,5	294	313	338	/	/
	Y	121	139	158	173	173	/	/
	Z	119	129	137	157	157	/	/
CBA72	X	/	/	290	309	334	372	400
	Y	/	/	158	173	173	191	211
	Z	/	/	137	157	157	168	183

3.1.4 CBA.3

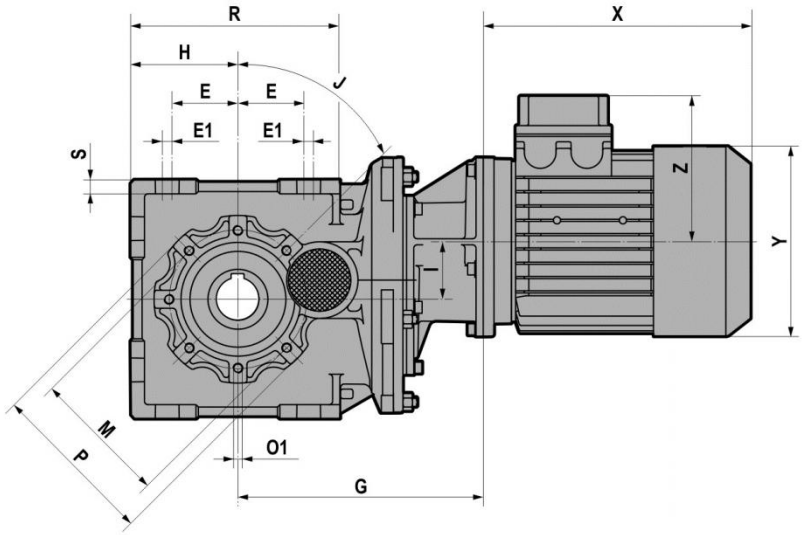

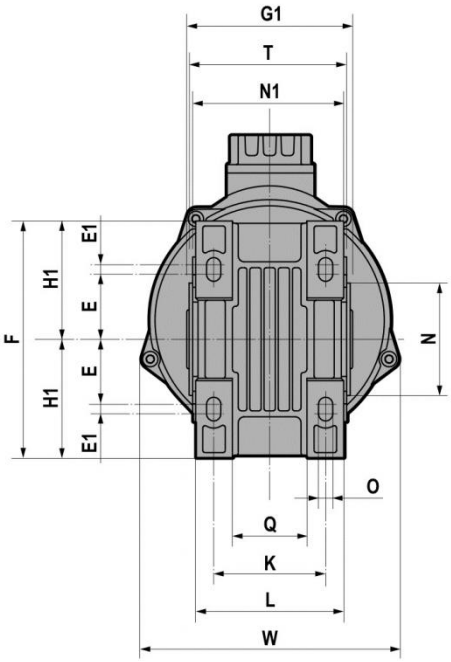

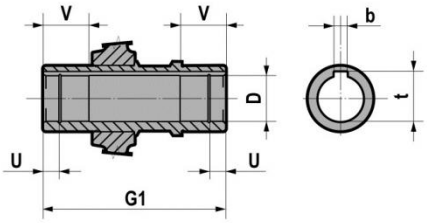

	D H7	b	t	U	V	E	E1	F	G	G1	H	H1	I	J	K	L	M	N	N1	O	O1	P	Q	R	S	T	W
CBA53	25	8	28,3	/	30	55	/	160	162	112	80	80	36,2	45	80	100	95	80	102	9	M8x14 n.6	110	51	153	10	108	152
	28	8	31,1																								
CBA73	35	10	38,3	12	35	55	8	200	204,5	140	90	100	48	45	94,5	125	115	95	130	12	M8x14 n.7	136	63	175	12	136	218
	30	8	33,3																								

T (IE1 - IE2)						
		063	071	080	090S	090L
CBA53 CBA73	X	180	205	223	237	262
	Y	121	139	158	173	173
	Z	104	112	122	130	130

TB (IE1 - IE2)						
		063	071	080	090S	090L
CBA53 CBA73	X	238	270,5	294	313	338
	Y	121	139	158	173	173
	Z	119	129	137	157	157

3.1.5 IBA.2

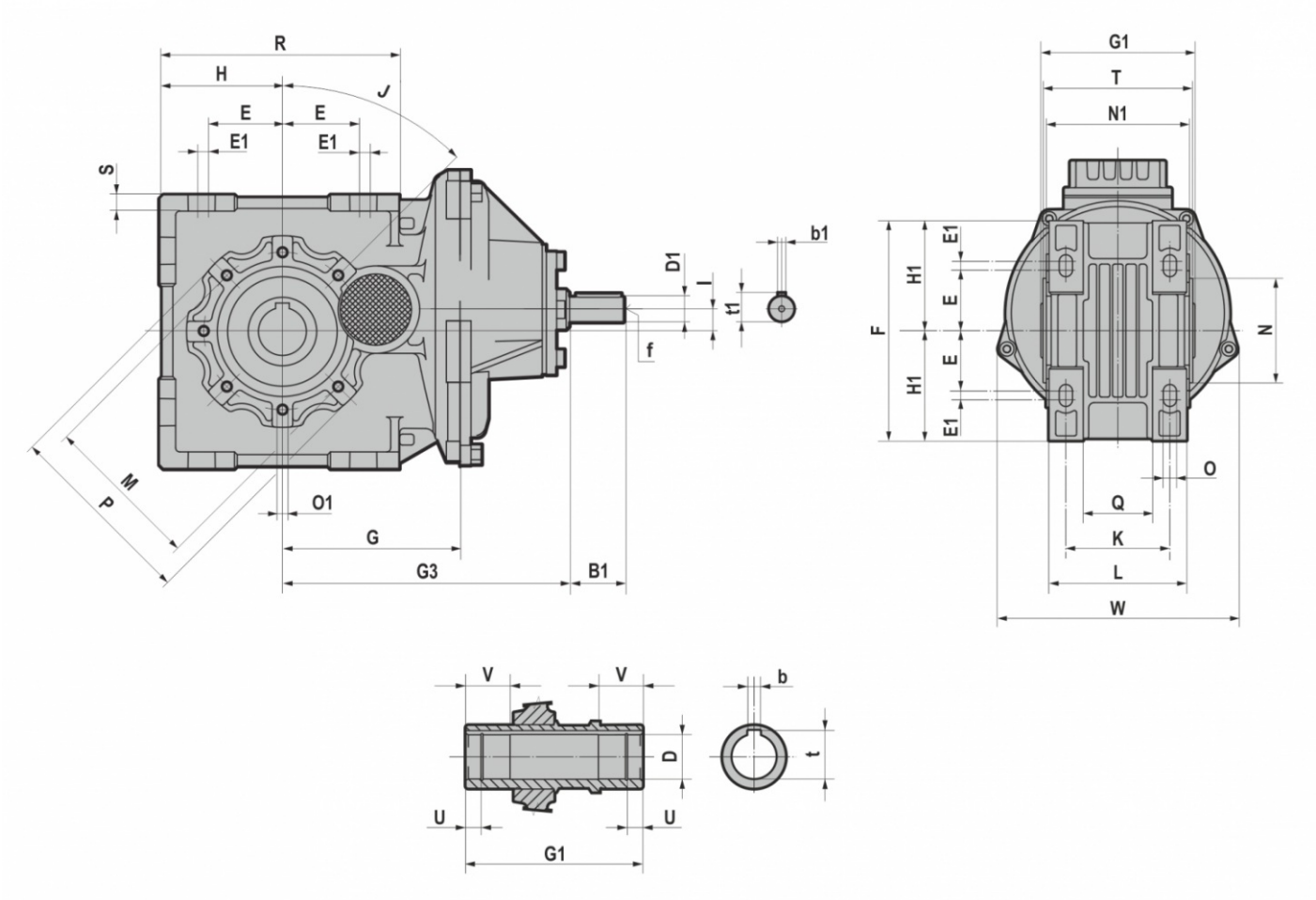

	D H7	b	t	U	V	E	E1	F	G	G1	H	H1	I	J	K	L	M	N	N1	O	O1	P	Q	R	S	T	W
IBA42	20	6	22,8	/	30	45	/	130	95	100	65	65	8	45	73,5	90	85	70	92	9	M8x12 n.4	100	45	127,5	8	97	152
IBA52	25	8	28,3	/	30	55	/	160	98	112	80	80	4,2	45	80	100	95	80	102	9	M8x14 n.6	110	51	153	10	108	152
	28	8	31,1																								
IBA72	35	10	38,3	12	35	55	8	200	129,5	140	90	100	16	45	94,5	125	115	95	130	12	M8x14 n.7	136	63	175	12	136	218
	30	8	33,3																								

	G3	D1	B1	b1	t1	f
IBA42	175,5	16	40	5	18	M6
IBA52	179	16	40	5	18	M6
IBA72	210	19	40	6	21,5	M6

3.1.6 IBA.3

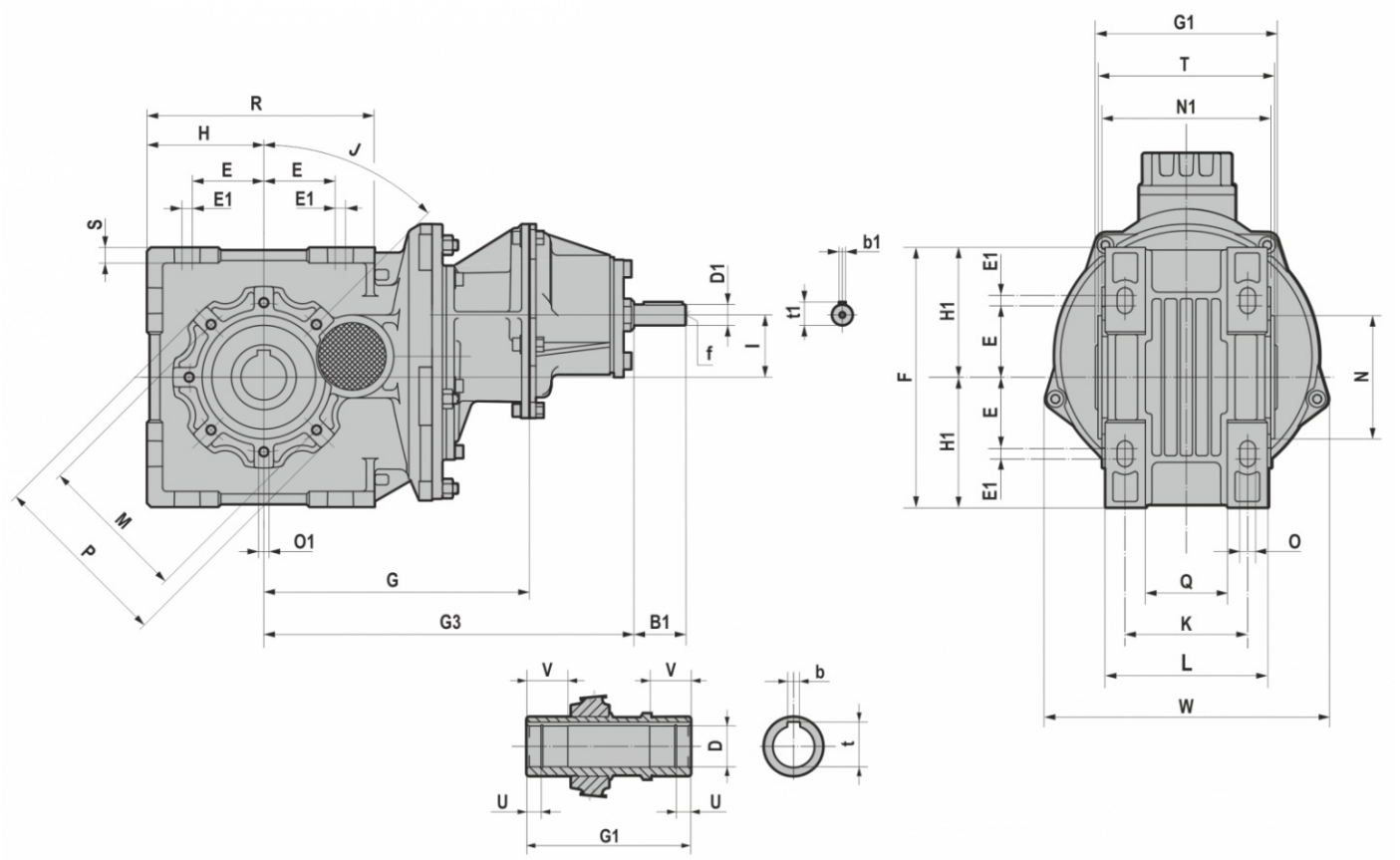

	D H7	b	t	U	V	E	E1	F	G	G1	H	H1	I	J	K	L	M	N	N1	O	O1	P	Q	R	S	T	W
IBA53	25	8	28,3	/	30	55	/	160	162	112	80	80	36,2	45	80	100	95	80	102	9	M8x14 n.6	110	51	153	10	108	152
	28	8	31,1																								
IBA73	35	10	38,3	12	35	55	8	200	204,5	140	90	100	48	45	94,5	125	115	95	130	12	M8x14 n.7	136	63	175	12	136	218
	30	8	33,3																								

	G3	D1	B1	b1	t1	f
IBA53	242,5	16	40	5	18	M6
IBA73	285	16	40	5	18	M6

3.1.7 B

B...F

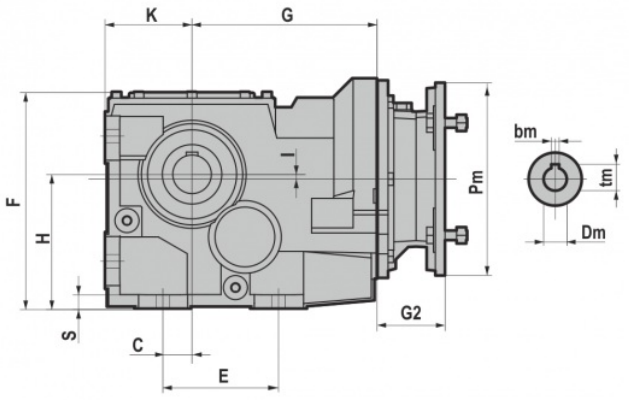
K
G
F
H
S
C
E
I
Pm
G2
bm
tm
Dm

B...S

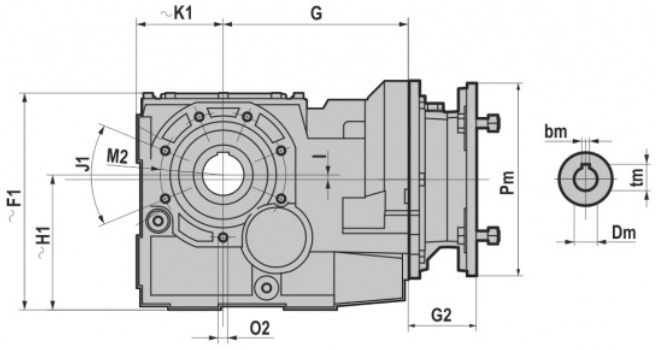
~K1
G
~F1
~H1
J1
M2
I
Pm
O2
G2
bm
tm
Dm

B...U

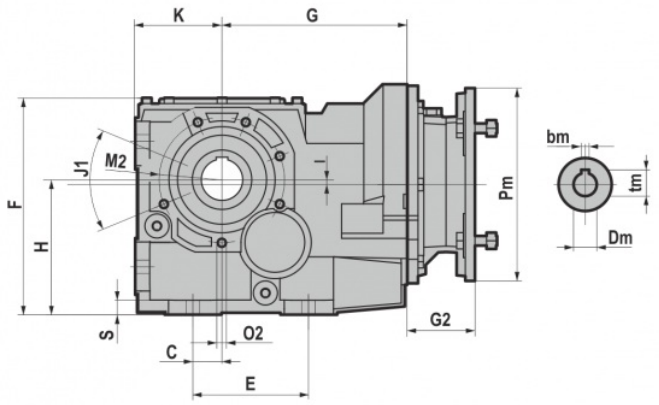
K
G
F
H
J1
M2
S
C
O2
E
I
Pm
G2
bm
tm
Dm

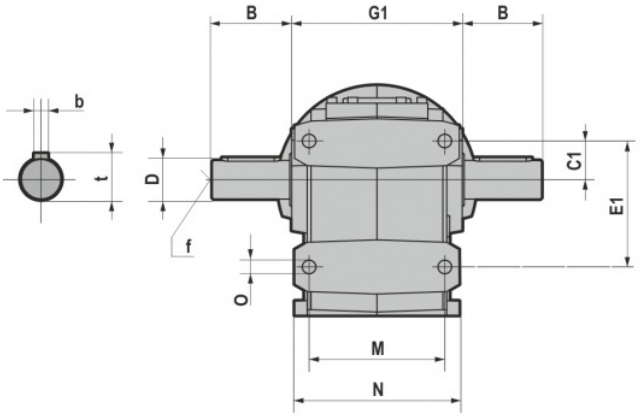
b
t
B
G1
B
D
f
O
C1
E1
M
N

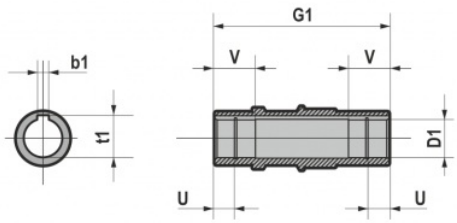
b1
t1
G1
V
V
D1
U
U

3.1 RIDUTTORI/MOTORIDUTTORI

	D1 H7	b1	t1	U	V	B	D	b	t	f	C	C1	E	E1	F	F1
B063	35	10	38,3	12	35	58	35 k6	10	38	M12	30	39	130	126	215	219,5
	40	12	43,3													
B083	40	12	43,3	22,25	42	80	40 k6	12	43	M16	30	40	120	130	225	225
	45	14	47,6													
B103	45	14	48,8	22,25	50	100	50 k6	14	53,5	M16	40	50	150	160	283	283
	50	14	53,8	25												
B123	60	18	64,4	28	70	120	60 m6	18	64	M20	55	78	180	220	341	342
B143	70	20	74,9	27,5	75	140	70 m6	20	74,5	M20	75	90	240	280	414	/
B153	90	25	95,4	34	90	170	90 m6	25	95	M20	95	110	280	330	490	/
	80	22	85,4													
B163	100	28	106,4	40	100	210	110 m6	28	116	M20	115	155	350	420	615	/

	G	G1	H	H1	I	K	K1	M	N	O	S	J1	M2	O2
B063	174	140	132	137	33	88	92,5	104	126	14	12	45	130	M10x20 (n.6)
B083	192	180	140	140	5	90	90	140	170	14	15	45	130	M10x20 (n.6/7)
B103	213,5	210	180	180	25	112	112	165	205	18	18	45	165	M12x22 (n.6/7)
B123	246	240	212	213	33,5	132	133	180	230	22	22	45	185	M14x28 (n.7)
B143	279	300	265	/	34	160	/	240	290	22	22	45	200	M14x30 (n.7)
B153	353	350	315	/	35	200	/	270	330	26	26	45	245	M16x32 (n.7)
B163	426,5	445	375	/	47	230,5	/	330	400	38	45	45	298	M18x40 (n.6)

		G2				
IEC	Pm x Dm	B063	B083-B103	B123-B143	B153	B163
063	**140x11**	57	/	/	/	/
071	**160x14**	69,0	/	/	/	/
080	**200x19**	90,0	70,0	60,5	/	/
090	**200x24**	90,0	70,0	60,5	/	/
100-112	**250x28**	105,0	85,0	75,5	/	/
132	**300x38**	/	110,0	100,5	76,0	/
160	**350x42**	/	157,5	148,0	123,5	109,0
180	**350x48**	/	157,5	148,0	123,5	109,0
200	**400x55**	/	/	185,0	160,5	146,0
225	**450x60**	/	/	/	160,5	146,0
250	**550*65**	/	/	/	/	175,0
280	**550*75**	/	/	/	/	175,0

B5	Pm	Dm	bm	tm
063	140	11	4	12,8
071	160	14	5	16,3
080	200	19	6	21,8
090	200	24	8	27,3
100	250	28	8	31,3
112	250	28	8	31,3
132	300	38	10	41,3
160	350	42	12	45,3
180	350	48	14	51,8
200	400	55	16	59,3
225	450	60	18	64,4
250	550	65	18	69,4
280	550	75	20	79,9

3.1.8 CB

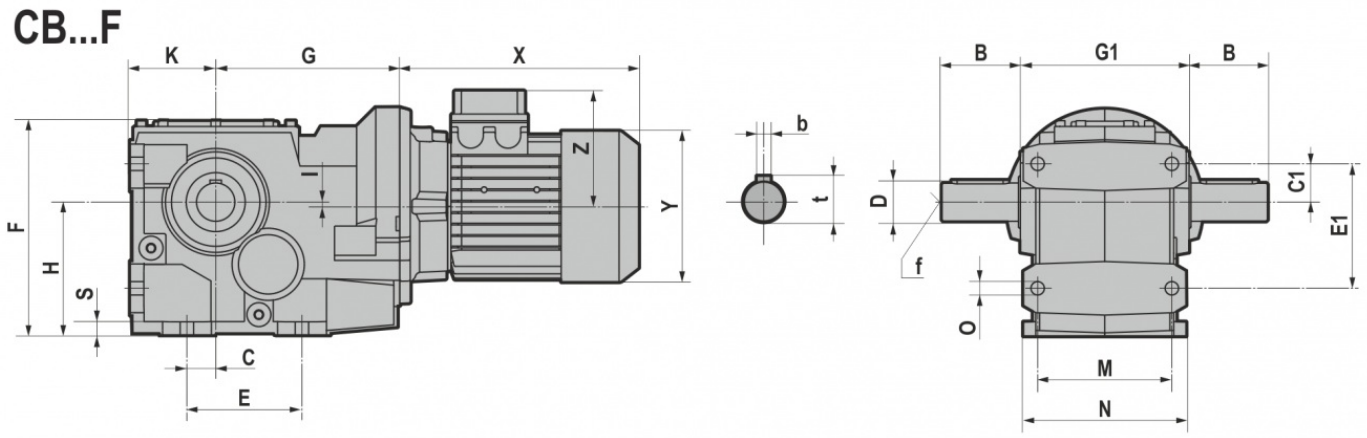
CB...F
K
G
X
B
G1
B
b
t
D
f
C1
E1
O
M
N
F
H
S
C
E
I
Z
Y

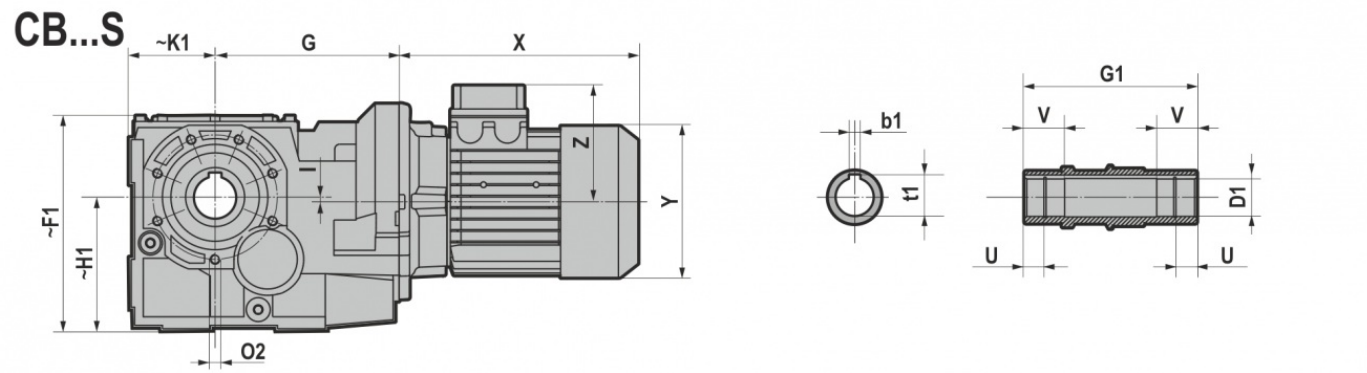
CB...S
~K1
G
X
G1
b1
V
V
t1
D1
U
U
~F1
~H1
O2
I
Z
Y

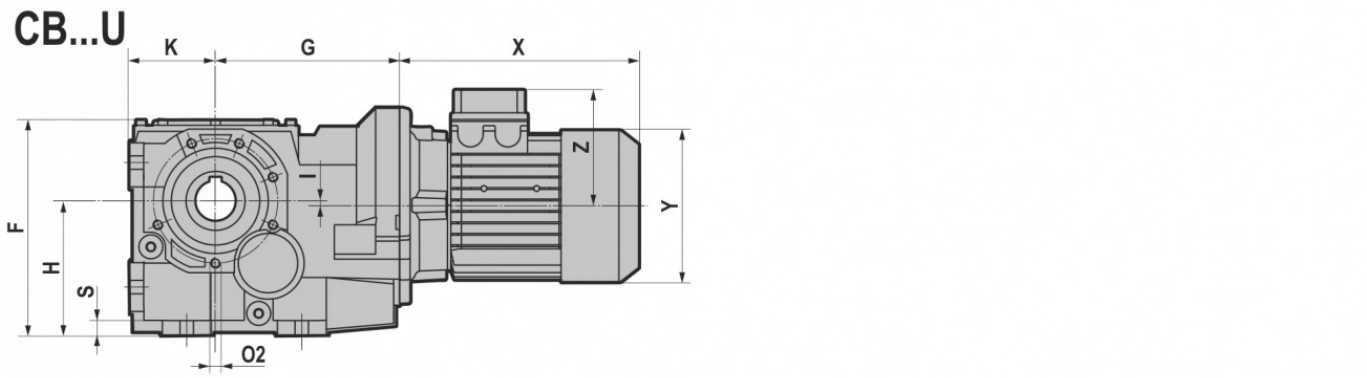
CB...U
K
G
X
F
H
S
O2
I
Z
Y

3.1 RIDUTTORI/MOTORIDUTTORI

	D1 H7	b1	t1	U	V	B	D	b	t	f	C	C1	E	E1	F	F1
CB063	35	10	38,3	12	35	58	35 k6	10	38	M12	30	39	130	126	215	219,5
	40	12	43,3													
CB083	40	12	43,3	22,25	42	80	40 k6	12	43	M16	30	40	120	130	225	225
	45	14	47,6													
CB103	45	14	48,8	22,25	50	100	50 k6	14	53,5	M16	40	50	150	160	283	283
	50	14	53,8	25												
CB123	60	18	64,4	28	70	120	60 m6	18	64	M20	55	78	180	220	341	342
CB143	70	20	74,9	27,5	75	140	70 m6	20	74,5	M20	75	90	240	280	414	/
CB153	90	25	95,4	34	90	170	90 m6	25	95	M20	95	110	280	330	490	/
	80	22	85,4													
CB163	100	28	106,4	40	100	210	110 m6	28	116	M20	115	155	350	420	615	/

	G	G1	H	H1	I	K	K1	M	N	O	S	J1	M2	O2
CB063	174	140	132	137	33	88	92,5	104	126	14	12	45	130	M10x20 (n.6)
CB083	192	180	140	140	5	90	90	140	170	14	15	45	130	M10x20 (n.6/7)
CB103	213,5	210	180	180	25	112	112	165	205	18	18	45	165	M12x22 (n.6/7)
CB123	246	240	212	213	33,5	132	133	180	230	22	22	45	185	M14x28 (n.7)
CB143	279	300	265	/	34	160	/	240	290	22	22	45	200	M14x30 (n.7)
CB153	353	350	315	/	35	200	/	270	330	26	26	45	245	M16x32 (n.7)
CB163	426,5	445	375	/	47	230,5	/	330	400	38	45	45	298	M18x40 (n.6)

T (IE1 - IE2)										
		063	071	080	090S	090L	100	112	132S	132M
CB063	X	215	241	268	296	321	333	351	/	/
	Y	121	139	158	173	173	191	211	/	/
	Z	104	112	122	130	130	139	154	/	/
CB083 CB103	X	/	221	248	276	301	335	356	405	443
	Y	/	139	158	173	173	191	211	249	249
	Z	/	112	122	130	130	139	154	194	194
CB123 CB143	X	/	/	/	267	292	326	347	396	434
	Y	/	/	/	173	173	191	211	249	249
	Z	/	/	/	130	130	139	154	194	194

TB (IE1 - IE2)										
		063	071	080	090S	090L	100	112	132S	132M
CB063	X	273	307	341	373	398	415	448	/	/
	Y	121	139	158	173	173	191	211	/	/
	Z	119	129	137	157	157	168	183	/	/
CB083 CB103	X	/	287	321	353	378	417	453	505	547
	Y	/	139	158	173	173	191	211	249	249
	Z	/	129	137	157	157	168	183	230	230
CB123 CB143	X	/	/	/	343	368	407	443	495	537
	Y	/	/	/	173	173	191	211	249	249
	Z	/	/	/	157	157	168	183	230	230

3.1.9 IB

IB...F

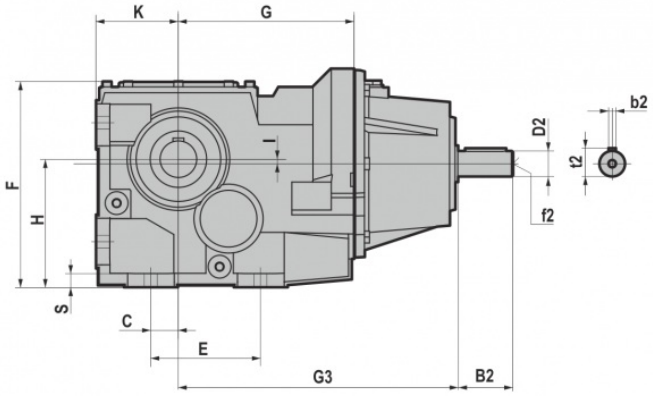

IB...S

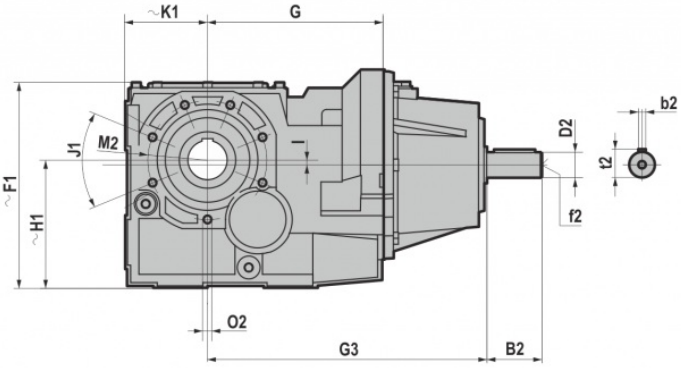

IB...U

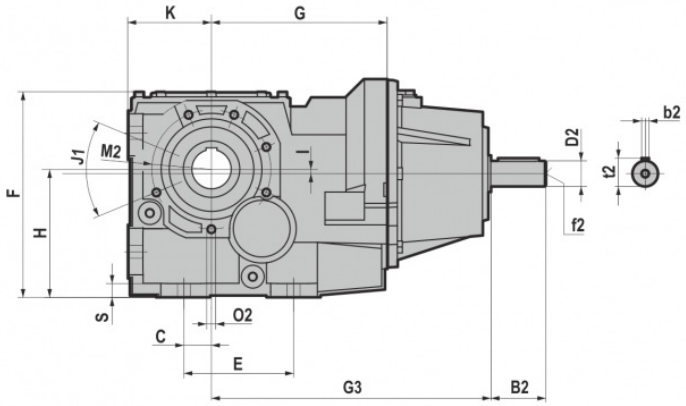

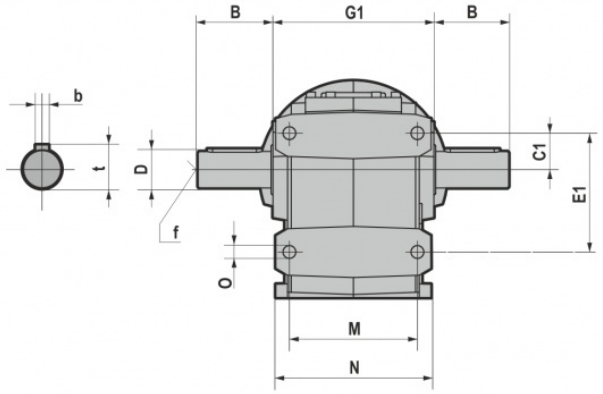

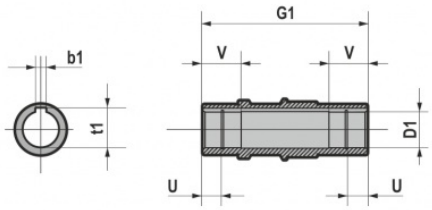

3.1 RIDUTTORI/MOTORIDUTTORI

	D1 H7	b1	t1	U	V	B	D	b	t	f	C	C1	E	E1	F	F1
IB063	35	10	38,3	12	35	58	35 k6	10	38	M12	30	39	130	126	215	219,5
	40	12	43,3													
IB083	40	12	43,3	22,25	42	80	40 k6	12	43	M16	30	40	120	130	225	225
	45	14	47,6													
IB103	45	14	48,8	22,25	50	100	50 k6	14	53,5	M16	40	50	150	160	283	283
	50	14	53,8	25												
IB123	60	18	64,4	28	70	120	60 m6	18	64	M20	55	78	180	220	341	342
IB143	70	20	74,9	27,5	75	140	70 m6	20	74,5	M20	75	90	240	280	414	/
IB153	90	25	95,4	34	90	170	90 m6	25	95	M20	95	110	280	330	490	/
	80	22	85,4													
IB163	100	28	106,4	40	100	210	110 m6	28	116	M20	115	155	350	420	615	/

	G	G1	H	H1	I	K	K1	M	N	O	S	J1	M2	O2
IB063	174	140	132	137	33	88	92,5	104	126	14	12	45	130	M10x20 (n.6)
IB083	192	180	140	140	5	90	90	140	170	14	15	45	130	M10x20 (n.6/7)
IB103	213,5	210	180	180	25	112	112	165	205	18	18	45	165	M12x22 (n.6/7)
IB123	246	240	212	213	33,5	132	133	180	230	22	22	45	185	M14x28 (n.7)
IB143	279	300	265	/	34	160	/	240	290	22	22	45	200	M14x30 (n.7)
IB153	353	350	315	/	35	200	/	270	330	26	26	45	245	M16x32 (n.7)
IB163	426,5	445	375	/	47	230,5	/	330	400	38	45	45	298	M18x40 (n.6)

	G3	B2	D2	b2	t2	f2
IB063	264	50	24 j6	8	27	M8
IB083	305	60	28 j6	8	31	M10
IB103	326,5	60	28 j6	8	31	M10
IB123	372,5	80	38 k6	10	41	M12
IB143	405,5	80	38 k6	10	41	M12
IB153	493	110	42 k6	12	45	M16
IB163	561,5	110	48 k6	14	51,5	M16

3.2.1 Motori elettrici

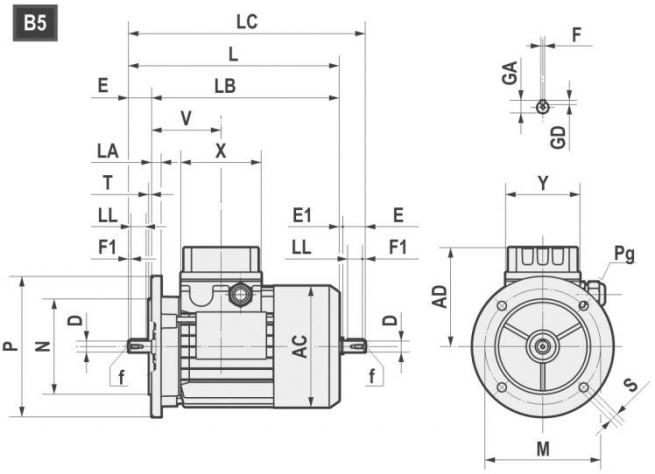

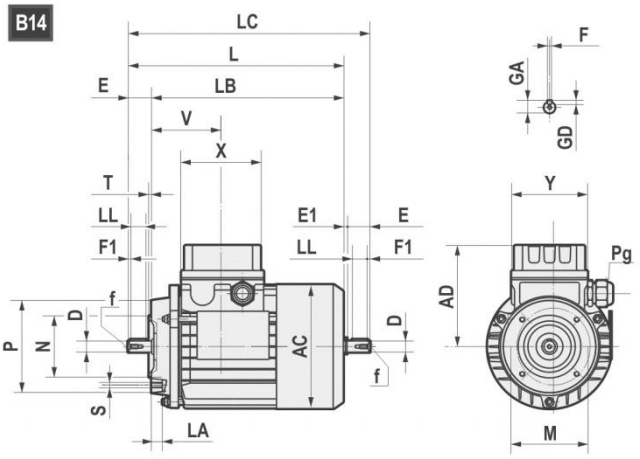

	AC	AD	L	LB	LC	X	Y	V	D	E	E1	f	F1	GA	F	GD
063	121	104	211	188	235,5	80	74	69	11 j6	23	1,5	M4x10	2,5	12,5	4	4
071	139	112	238,5	208,5	271	80	74	74,5	14 j6	30	2,5	M5x12.5	3	16	5	5
080	158	122	272,5 *(296)	232,5 *(256)	314 *(337)	80	74	78	19 j6	40	1,5	M6x16	5	21,5	6	6
90S	173	146	298 *(331)	248 *(281)	349,5 *(381)	98	98	89,5	24 j6	50	1,5	M8x19	5	27	8	7
90L	173	146	323 *(356)	273 *(306)	374,5 *(408)	98	98	89,5	24 j6	50	1,5	M8x19	5	27	8	7
100	191	155	368	308	431,5	98	98	97,5	28 j6	60	3,5	M10x22	7,5	31	8	7
112	211	170	382,5 *(408)	322,5 *(348)	447 *(472)	98	98	100	28 j6	60	3,5	M10x22	7,5	31	8	7
132S	249	195	452	372	536,5	118	118	115,5	38 k6	80	4	M12x28	10	41	10	8
132L	249	195	490	410	574,5	118	118	115,5	38 k6	80	4	M12x28	10	41	10	8
160S	249	195	520	410	/	118	118	115,5	42k6	100	/	M16x36	10	45	12	8

*TP80B4,TP90S4, TP90L4, TP90S6, TP112M4, TP112M6

B5	M	N	P	LA	S	T
063	115	95	140	10	9	3
071	130	110	160	10	9,5	3,5
080	165	130	200	12	11	3,5
090	165	130	200	12	11	3,5
100	215	180	250	15	14	4
112	215	180	250	14,5	14	4
132	265	230	300	20	14	3,5
160	300	250	350	13	18,5	3,5

B14	M	N	P	LA	S	T
063	75	60	90	10	M5	2,5
071	85	70	105	10,5	M6	2,5
080	100	80	120	10,5	M6	3
090	115	95	140	11,5	M8	3
100	130	110	160	15	M8	3,5
112	130	110	160	11,5	M8	3,5
132	165	130	200	20,5	M10	3,5
160	215	180	250	-	M12	4

3.2 MOTORI ELETTRICI

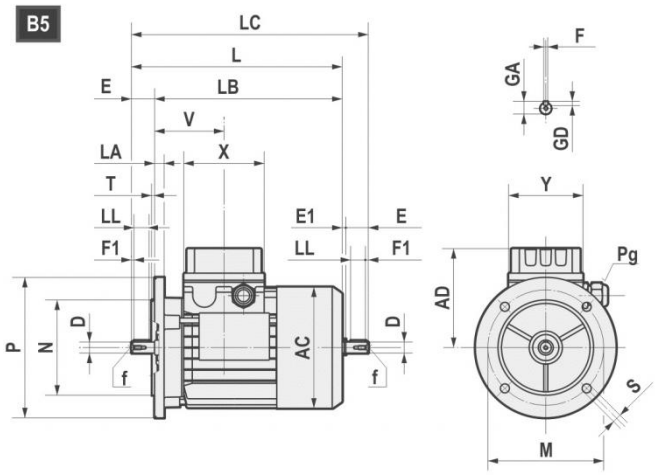

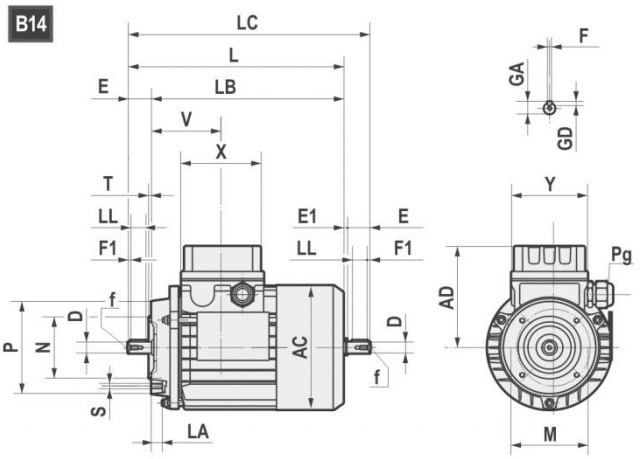

		AC	AD	L	LB	X	D	E	f	GA	F	GD	LL	Pg	
160M	2-4-6	314	251	600	490	158	42	110	M16	45	12	8	90	2-M40x1,5	1-M16x1,5
160L	2-4-6	314	251	645	535	158	42	110	M16	45	12	8	90	2-M40x1,5	1-M16x1,5
180M	2-4	355	267	680	570	158	48	110	M16	51,5	14	9	100	2-M40x1,5	1-M16x1,5
180L	4-6	355	267	720	610	158	48	110	M16	51,5	14	9	100	2-M40x1,5	1-M16x1,5
200L	2-4-6	397	300	785	675	187	55	110	M20	59	16	10	100	2-M50x1,5	1-M16x1,5
225S	4	446	325	820	680	187	60	140	M20	64	18	11	125	2-M50x1,5	1-M16x1,5
225M	2	446	325	815	705	187	55	110	M20	59	16	10	100	2-M50x1,5	1-M16x1,5
225M	4-6	446	325	845	705	187	60	140	M20	64	18	11	125	2-M50x1,5	1-M16x1,5
250M	2-4-6	485	360	910	770	238	60	140	M20	64	18	11	125	2-M63x1,5	1-M16x1,5
250M	2-4-6	485	360	910	770	238	65	140	M20	69	18	11	125	2-M63x1,5	1-M16x1,5
280S	2-4-6	547	390	970	830	238	65	140	M20	69	18	11	125	2-M63x1,5	1-M16x1,5
280S	2-4-6	547	390	970	830	238	75	140	M20	79,5	20	12	125	2-M63x1,5	1-M16x1,5
280M	2-4-6	547	390	1025	885	238	65	140	M20	69	18	11	125	2-M63x1,5	1-M16x1,5
280M	2-4-6	547	390	1025	885	238	75	140	M20	79,5	20	12	125	2-M63x1,5	1-M16x1,5

B5	M	N	P	LA	S	T
160	300	250	350	13	19	5
180	300	250	350	15	19	5
200	350	300	400	17	19	5
225	400	350	450	20	19	5
250	500	450	550	22	19	5
280	500	450	550	22	19	5

3.2.2 Motori ad efficienza standard (TS), alta (TH) e premium (TP)

I motori trifase a singola polarità Motovario sono disponibili in tre versioni differenti (IE1-IE2-IE3) in accordo alla norma IEC 60034-30-1 (vedi tabella); Il rendimento è calcolato secondo il metodo prescritto dalla norma IEC 60034-2-1.

1. IE1: Serie TS ad efficienza standard
2. IE2: Serie TH ad alta efficienza
3. IE3: Serie TP ad efficienza premium

Tabella disponibilità commerciale Motovario

		LIVELLI DI EFFICIENZA		
POTENZA NOMINALE [kW]	POLI	IE1	IE2	IE3
0,09 ≤ Pn < 0,75	2 - 4 - 6	TS-TBS	-	-
0,75 ≤ Pn ≤ 11	2 - 4	TBS	-	-
0,75 ≤ Pn ≤ 5,5	6	TBS	TH-TBH	TP-TBP
0,75 ≤ Pn ≤ 9,2	2 - 4	-	TH-TBH	-
0,75 ≤ Pn ≤ 7,5	2 - 4	-	-	TP-TBP
11 ≤ Pn ≤ 37	2	TBS (*)	-	TP
11 ≤ Pn ≤ 55	4	TBS (*)	-	-
11 ≤ Pn ≤ 90	4	-	-	TP
7,5 ≤ Pn ≤ 22	6	TBS (*)	-	TP

(*) Serie disponibile su richiesta.

3.2.3 Potenza nominale - [kW]

	63A	63B	63C	71A	71B	71C	80A			80B		
Poli	TS	TS	TS	TS	TS	TS	TS	TH	TP	TS	TH	TP
2	0,18	0,25	0,37	0,37	0,55	-	-	0,75	0,75	-	1,1	1,1
4	0,12	0,18	0,22	0,25	0,37	0,55	0,55	-	-	-	0,75	0,75
6	0,09	0,12	0,15	0,18	0,25	0,37	0,37	-	-	0,55	-	-

	90S		90L		100LR	100L	100LA		112MR	112MS	112MA	112M
Poli	TH	TP	TH	TP	TP	TP	TH	TP	TP	TP	TH	TP
2	1,5	1,5	2,2	2,2	-	3	3	-	-	-	4	4
4	1,1	1,1	1,5	1,5	-	-	2,2	2,2	2,2	3	4	4
6	-	0,75	0,75	-	1,1	1,5	1,1	-	-	-	2,2	2,2

	112MR	112MS	132S	132SA	132MS	132SB	132M	132MA		132MB	
Poli	TP	TP	TP	TH	TP	TH	TP	TH	TP	TH	TP
2	-	-	5,5	5,5	-	7,5	7,5	9,2	-	-	-
4	2,2	3	-	5,5	5,5	-	7,5	7,5	-	-	-
6	-	-	3	3	-	-	-	4	4	5,5	5,5

	160M	160MA	160MB	160L	160LA	180M	180L
Poli	TP	TP	TP	TP	TP	TP	TP
2	-	11	15	18,5	-	22	-
4	-	11	-	-	15	18,5	22
6	7,5	-	-	11	-	-	15

	200L	200LA	200LB	225S	225M	250M	280S	280M
Poli	TP	TP	TP	TP	TP	TP	TP	TP
2	-	30	37	-	-	-	-	-
4	30	-	-	37	45	55	75	90
6	-	18,5	22	-	-	-	-	-

3.3 PESI

Nelle tabelle vengono riportati le masse indicative dei riduttori completi di lubrificante.

* B-PB	063	071	080-090	100-112	132	160-180	200	225	250	280	
A42	4,8	4,9	5,1	/	/	/	/	/	/	/	~ kg
A52	5,4	5,5	5,7	/	/	/	/	/	/	/	
A53	7,0	7,1	8,5	/	/	/	/	/	/	/	
A72	/	/	15,3	15,5	/	/	/	/	/	/	
A73	14.2	14,3	15,7	/	/	/	/	/	/	/	
063	20,6	21	21,6	25,9	/	/	/	/	/	/	
083	/	/	29,3	31,3	33,8	/	/	/	/	/	
103	/	/	54,8	56,8	59,5	66,2	/	/	/	/	
123	/	/	76,6	79	81,7	87,7	/	/	/	/	
143	/	/	/	124	127	133	148	/	/	/	
153	/	/	/	/	199	206,5	221	223	/	/	
163	/	/	/	/	/	385,3	449,8	457,1	473,5	473,5	

IB	~ kg
A42	4,8
A52	5,4
A53	8,2
A72	15,4
A73	15,4
063	23,7
083	33,1
103	58,8
123	86,5
143	132
153	213
163	455,6

*Peso senza motore

	TS									
CB	063	071	080	090S	090L	100	112	132S	132M	
A42	7,4	9,3	13,3	/	/	/	/	/	/	~ kg
A52	8,2	10,2	14,2	16,1	18,6	/	/	/	/	
A53	9,7	11,7	15,7	17,6	20,1	/	/	/	/	
A72	/	/	21,6	23,6	26,1	34,6	41,6	/	/	
A73	16,9	18,9	22,9	24,9	27,4	/	/	/	/	
063	24,1	25	29,7	33,6	35,6	41,1	52,6	/	/	
083	/	/	35,7	38,1	39,6	44,7	56,1	70,1	81,7	
103	/	/	61,4	63,8	65,3	70,4	81,8	95,8	107,4	
123	/	/	/	85,7	86,7	92,7	102,7	117,7	126,7	
143	/	/	/	/	/	138	148	163	172	

	TH							
CB	080	090S	090L	100	112	132S	132M	
A42	15,0	/	/	/	/	/	/	~ kg
A52	15,9	18,4	20,6	/	/	/	/	
A53	17,4	19,9	22,1	/	/	/	/	
A72	23,3	25,9	28,1	36,9	44,7	/	/	
A73	24,6	27,2	29,4	/	/	/	/	
063	31,4	35,9	37,6	43,4	55,7	/	/	
083	37,4	40,4	41,6	47,0	59,2	75,4	88,5	
103	63,1	66,1	67,3	72,7	84,9	101,1	114,2	
123	/	88,0	88,7	95,0	105,8	123,0	133,5	
143	/	/	/	140,3	151,1	168,3	178,8	

	TBS									
CB	063	071	080	090S	090L	100	112	132S	132M	
A42	8,8	11,3	16,4	/	/	/	/	/	/	~ kg
A52	9,6	12,1	17,3	20,9	13,5	/	/	/	/	
A53	11,1	13,6	18,8	22,4	25	/	/	/	/	
A72	/	/	25,6	27,1	31,6	41,6	51,6	/	/	
A73	18,4	20,9	26,9	28,9	32,9	/	/	/	/	
063	25,6	27,2	33,2	39,1	41,1	46,6	62,3	/	/	
083	/	/	39,2	43,6	45,1	50,2	65,8	80,3	96,3	
103	/	/	64,8	69,3	70,8	75,8	91,5	106,1	122,1	
123	/	/	/	91,2	92,2	98,2	112,4	128	141,4	
143	/	/	/	/	/	143,5	158	173	187	

	TBH							
CB	080	090S	090L	100	112	132S	132M	
A42	18,1	/	/	/	/	/	/	~ kg
A52	19,0	23,2	15,5	/	/	/	/	
A53	20,5	24,7	27,0	/	/	/	/	
A72	27,3	29,4	33,6	45,3	54,7	/	/	
A73	28,6	31,2	34,9	/	/	/	/	
063	34,9	41,4	43,1	50,3	65,4	/	/	
083	40,9	45,9	47,1	53,9	68,9	85,6	102,8	
103	66,5	71,6	72,8	79,5	94,6	111,4	128,6	
123	/	93,5	94,2	101,9	115,5	133,3	147,9	
143	/	/	/	147,2	161,1	178,3	193,5	

3.4 ESTREMITÀ D'ALBERO

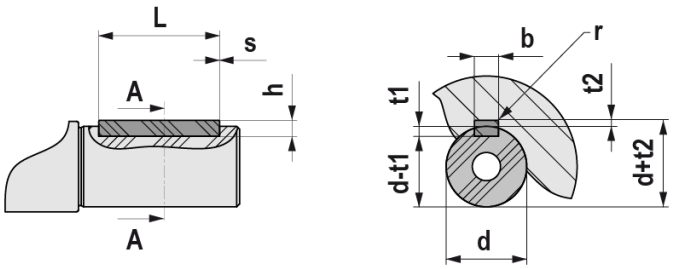

UNI 6604 - DIN 6885															
d			b x h			Tol. b / h	L		s min / max	b	t1	t2	Tol. t1 / t2	r max
	6	8	2	×	2	h9 / h9	6	20	0,16 0,25	2	1,2	1	0,1 0	0,08 0,16
>	8	10	3	×	3		6	36		3	1,8	1,4		
>	10	12	4	×	4		8	45		4	2,5	1,8		
>	12	17	5	×	5		10	56	0,25 0,4	5	3	2,3		0,16 0,25
>	17	22	6	×	6		14	70		6	3	2,8		
>	22	30	8	×	7	h9 / h11	18	90		8	4	3,3	0,2 0	
>	30	38	10	×	8		22	110	0,4 0,6	10	5	3,3		0,25 0,4
>	38	44	12	×	8		28	140		12	5	3,3		
>	44	50	14	×	9		36	160		14	5,5	3,8		
>	50	58	16	×	10		45	180		16	6	4,3		
>	58	65	18	×	11		50	200		18	7	4,4		
>	65	75	20	×	12		56	110	0,6 0,8	20	7,5	4,9		0,4 0,6
>	75	85	22	×	14		63	140		22	9	5,4		
>	85	95	25	×	14		70	160		25	9	5,4		
>	95	110	28	×	16		80	180		28	10	6,4		
>	110	130	32	×	18		90	200		32	11	7,4		
>	130	150	36	×	20		100	160	1 1,2	36	12	8,4	0,3 0	0,7 1
>	150	170	40	×	22		110	180		40	13	9,4		
>	170	200	45	×	25		125	200		45	14	10,4		

4.1 ALBERI LENTI

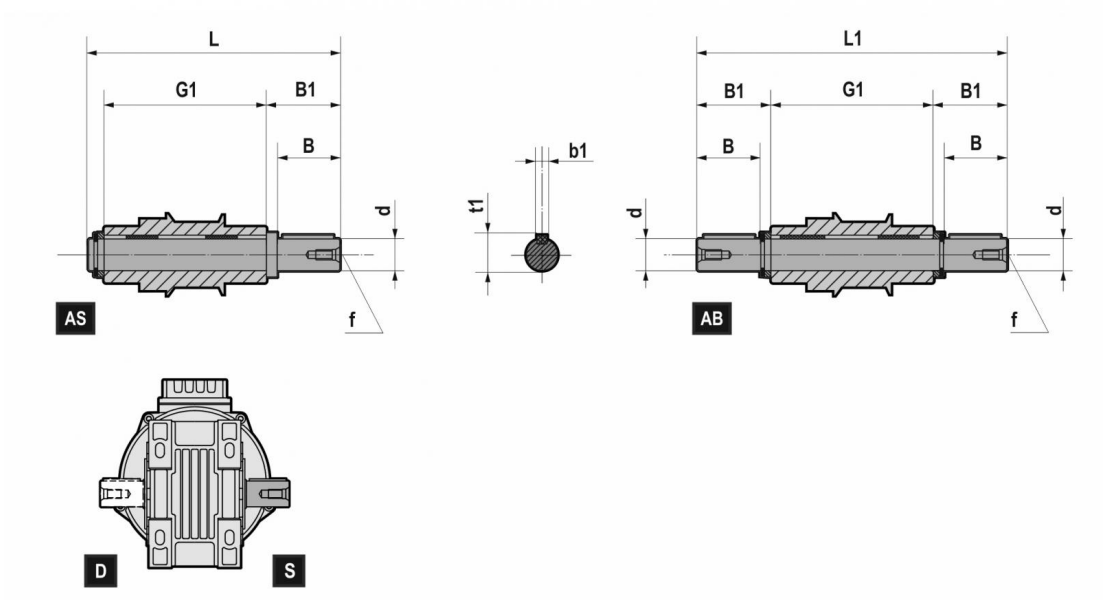

BA70 albero pieno

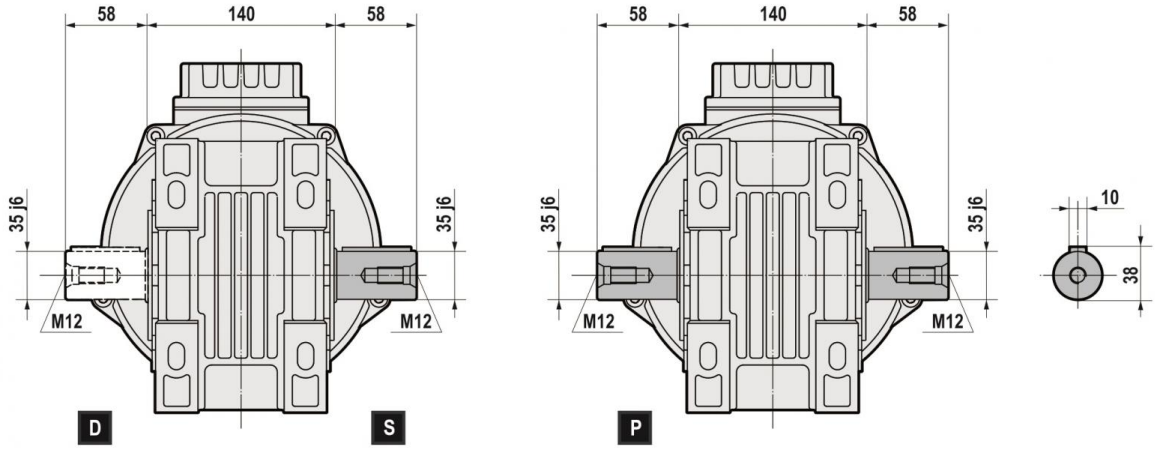

	d h6	B	B1	G1	L	L1	f	b1	t1
BA42	20	40	43,5	100	151	187	M6	6	22,5
BA52-BA53	25	50	53,5	112	173	219	M10	8	28
B063	35	58	62	140	210,5	264	M12	10	38
B083	40	80	84,25	180	273	348,5	M16	12	43
B103	50	100	105	210	325	420	M16	14	53,5
B123	60	120	125	240	375	490	M20	18	64
B143	70	140	146	300	458	592	M20	20	74,5
B153	90	170	176,5	350	540	703	M20	25	95
B163	100	210	217,5	445	677	880	M20	28	106

4.2 FLANGIA USCITA

4.2.1 BA

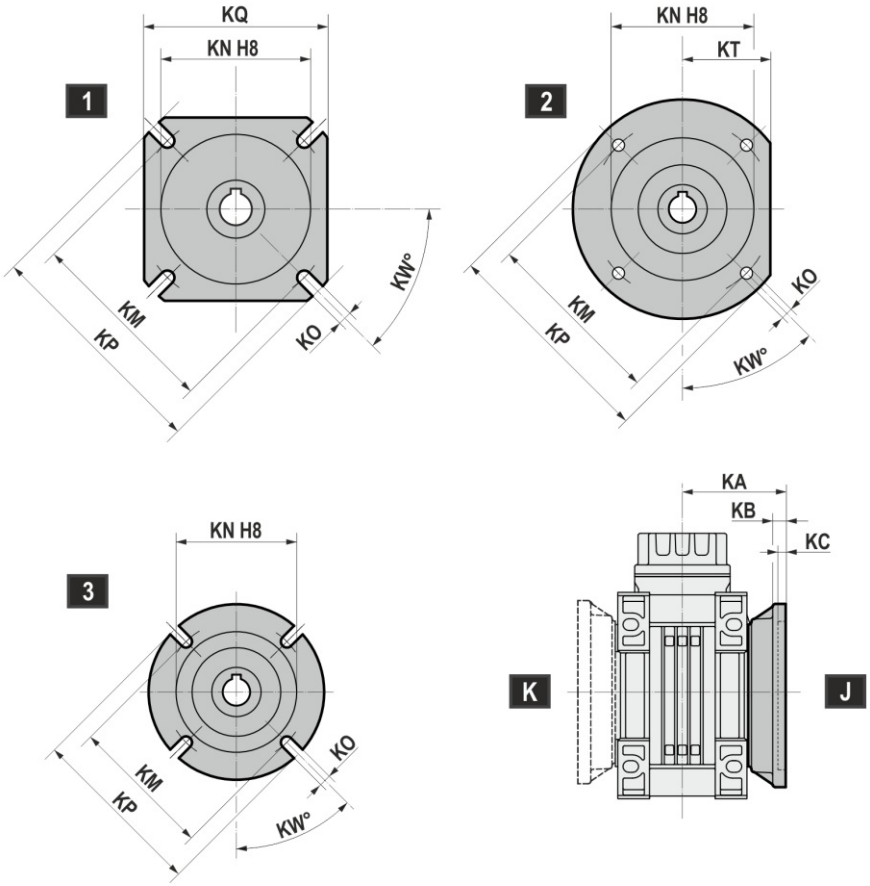

	A42	A52-A53	A72-A73
FA	1	1	1
FB	1	1	3
FC	2	2	-
FD	2	2	-

B..F-CB..F		KA	KB	KC	KN	KM	KO	KP	KQ	KT	KW
BA42	FA	92,5	9	5	70	90 min	11 (n°4)	125	110	-	45°
	FB	122,5	9	5	70	90 min	11 (n°4)	125	110	-	45°
	FC	91,5	10	5	110	130	9.5 (n°4)	160	-	66	45°
	FD	74,5	14,5	5	95	115	11 (n°4)	140	-	60	45°
BA52 BA53	FA	80	10	6	115	150	11 (n°4)	180	142	-	45°
	FB	110	10	6	115	150	11 (n°4)	180	142	-	45°
	FC	96	10	5	130	165	11 (n°4)	200	-	80	45°
	FD	105	10	5	130	165	11 (n°4)	200	-	-	45°
BA72 BA73	FA	119	13	6	130	165	14 (n°4)	200	170	-	45°
	FB	98	13	6	110	130	11 (n°4)	160	-	-	45°

Se non diversamente specificato il riduttore viene fornito con l'accessorio in pos. J riferito alla posizione di piazzamento B3/B5.

4.2 FLANGIA USCITA

4.2.2 B

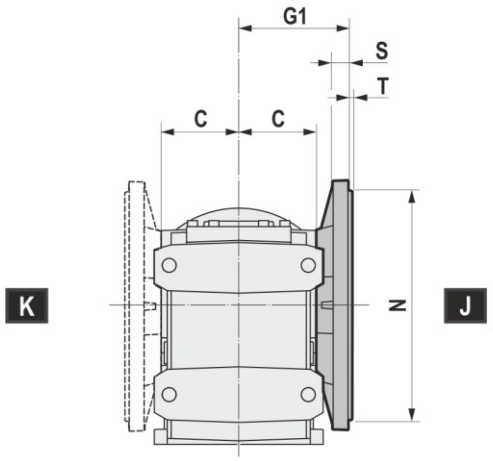

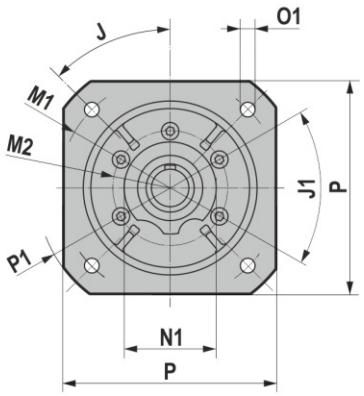

FA

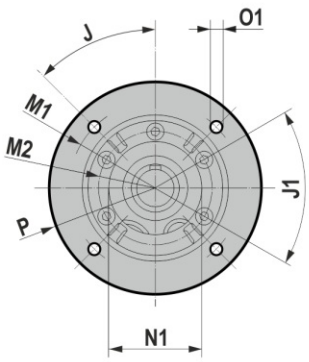

FB

FC

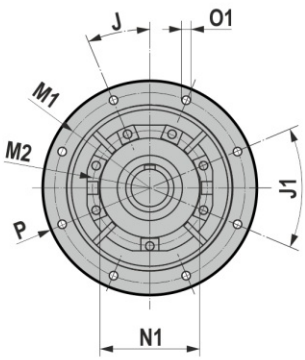

FB

(B150/B160)

B..S - B..U		J	J1	M1	M2	N f8	N1	O1	P	P1	S	T	C	G1
B063	FA	45	45	265	130	230	110	14	250	300	15	4	61,5	93,5
	FB	45	45	215	130	180	110	14	250	/	15	4		
	FC	45	45	165	130	130	110	11	200	/	15	3,5		
B083	FA	45	45	265	130	230	110	14	250	300	15	4	78	110
	FB	45	45	215	130	180	110	14	250	/	15	4		
	FC	45	45	165	130	130	110	11	200	/	15	3,5		
B103	FA	45	45	300	165	250	130	18	300	350	16	5	95	135
	FB	45	45	265	165	230	130	14	300	/	16	4		
	FC	45	45	215	165	180	130	14	250	/	16	4		
B123	FA	45	45	350	185	300	150	18	350	400	18	5	107,5	150
	FB	45	45	300	185	250	150	18	350	/	18	5		
	FC	45	45	265	185	230	150	14	300	/	18	4		
B143	FB	45	45	350	200	300	170	18	400	/	18	5	138	187,5
B153	FB	22,5	45	400	245	350	210	18	450	/	25	5	162,5	207,5
	FC	45	45	350	245	300	210	18	400	/	25	5		
B163	FA	22,5	45	500	298	450	255	18	550	/	28	5	202,5	256

Se non diversamente specificato il riduttore viene fornito con l'accessorio in pos. J riferito alla posizione di piazzamento B3/B5.

4.3 SISTEMI DI FISSAGGIO PENDOLARE

4.3.1 Braccio di reazione: Posizioni di montaggio BA

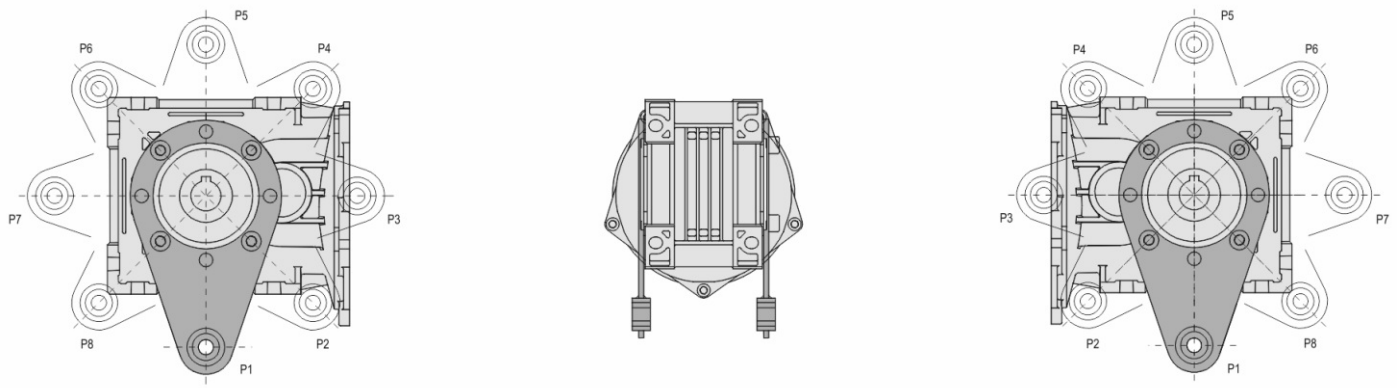

	P1		P2		P3		P4		P5		P6		P7		P8	
	J	K	J	K	J	K	J	K	J	K	J	K	J	K	J	K
BA42		*	/	/	/	/	/	/			/	/			/	/
BA52/A53			/	/	/	/	/	/								
BA72/A73			/	/	/	/	/	/								

(*) Non disponibile con calettatore (/) Non disponibile

4.3.2 Braccio di reazione: Dimensioni BA

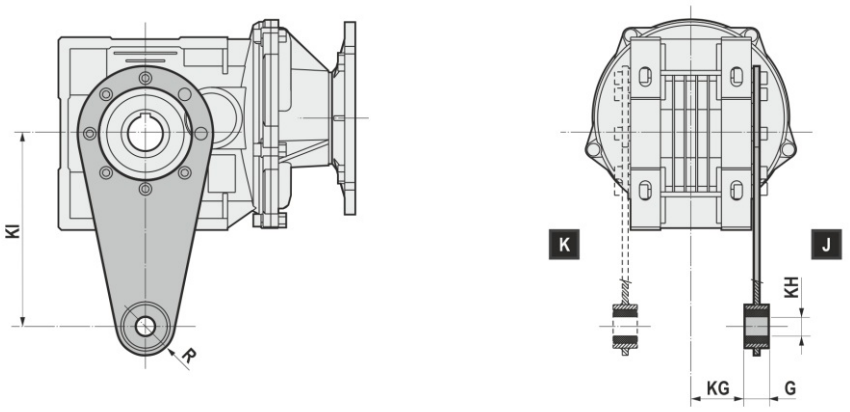

	KI	KG	KH	G	R
BA42	100	41	10	14	18
BA52/BA53	150	47	10	14	18
BA72/BA73	200	55,5	20	25	30

Se non diversamente specificato il riduttore viene fornito con l'accessorio in pos. J riferito alla posizione di piazzamento B3/B5.

4.3.3 Braccio di reazione: Posizioni di montaggio B

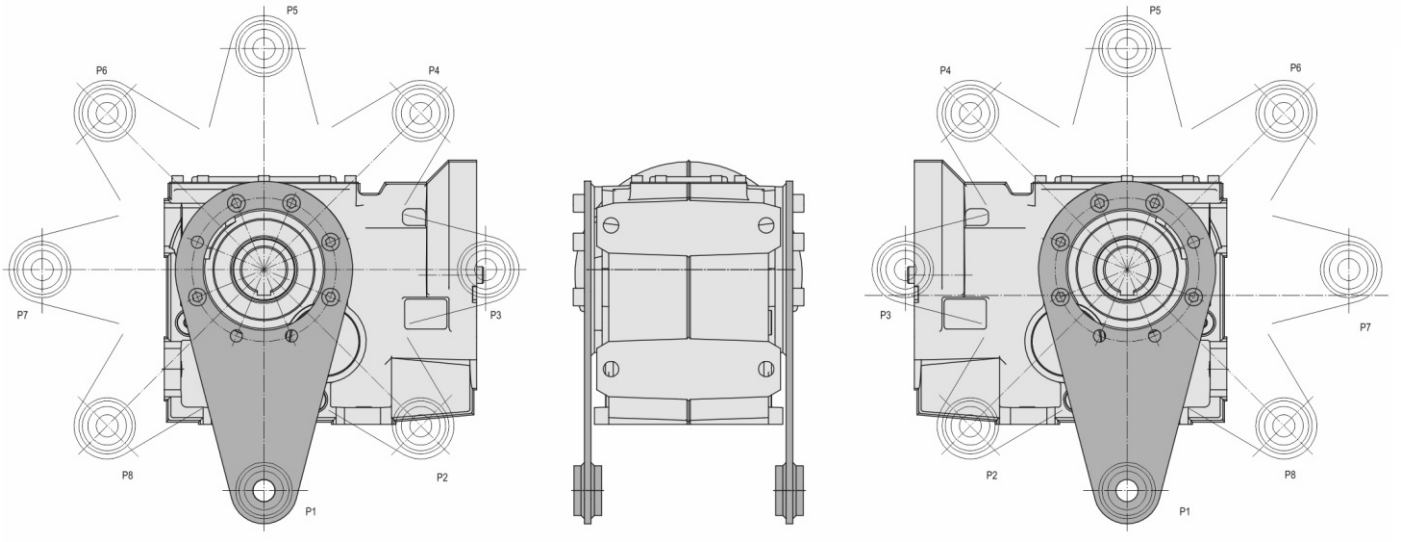

J K J K

	P1		P2		P3		P4		P5		P6		P7		P8	
	J	K	J	K	J	K	J	K	J	K	J	K	J	K	J	K
B063					/	/										
B083			/	/	/	/										
B103			/	/	/	/										
B123			/	/	/	/										

(/) Non disponibile

4.3 SISTEMI DI FISSAGGIO PENDOLARE

4.3.4 Braccio di reazione: Dimensioni B063-083-103-123

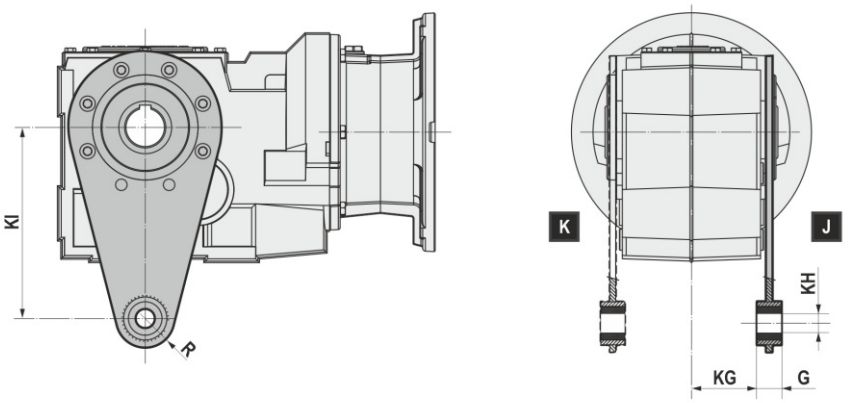

	KI	KG	KH	G	R
B063S	200	62	20	25	30
B083S	200	68,5	20	25	30
B103S	250	83	25	30	35
B123S	300	91,5	25	40	40
B063U	200	62	20	25	30
B083U	200	78,5	20	25	30
B103U	250	95	25	30	35
B123U	300	103,5	25	40	40

Se non diversamente specificato il riduttore viene fornito con l'accessorio in pos. J riferito alla posizione di piazzamento B3/B5.

4.3.5 Braccio di reazione: Dimensioni B143-153-163

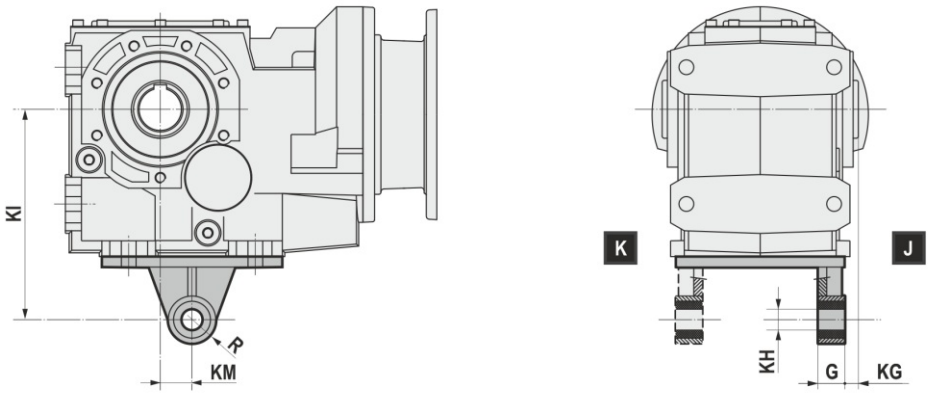

	KM	KI	KG	KH	G	R
B143	45	350	40	30	60	45
B153	45	450	45	30	60	45
B163	60	550	7,5	40	110	65

Se non diversamente specificato il riduttore viene fornito con l'accessorio in pos. J riferito alla posizione di piazzamento B3/B5.

4.4 COPERCHIO DI PROTEZIONE ASSE LENTO

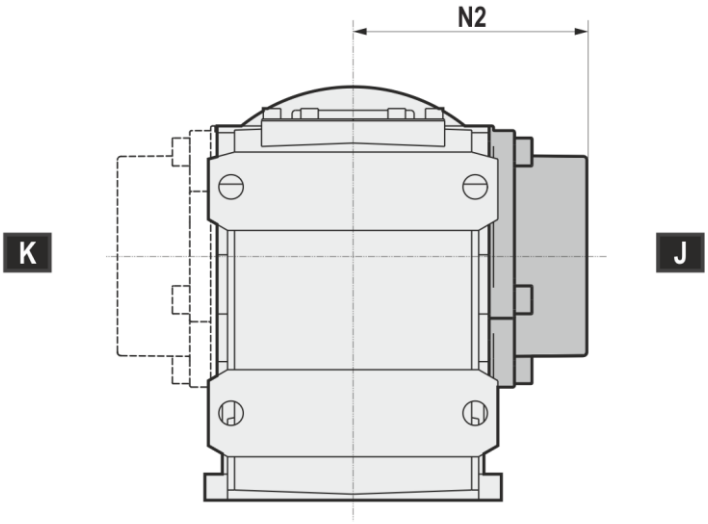

	N2
B063	117,5
B083	134
B103	150
B123	174
B143	217
B153	256,5
B163	301,5

Per le versioni FL, FM, SL, SM, UL, UM l'accessorio è fornito non montato.

Accessorio NON certificato ATEX.

4.5 DISPOSITIVO ANTIRETRO

Il riduttore può essere fornito munito di dispositivo antiretro sull'asse veloce. L'antiretro permette la rotazione degli alberi in un solo senso, a seconda della grandezza è disponibile nella flangia PAM oppure nel motore, senza ingombri aggiuntivi. E' molto importante, in fase di ordine, specificare il senso di rotazione richiesto. Il dispositivo non è disponibile per posizione di piazzamento V5 con motore grandezza IEC 100...280. A richiesta il senso di rotazione dell'asse lento può essere invertito, specificando "rotazione opposta" in fase d'ordine

SENSO DI ROTAZIONE LIBERO STANDARD

BA..2/S - **BA..**3/C-D-P-L - **B..**3/C-D-P-L

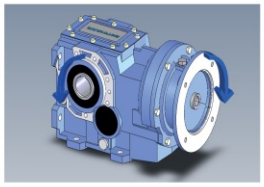

SENSO **ORARIO** RIFERITO ALL'ASSE VELOCE

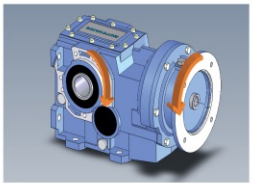

SENSO **ANTIORARIO** RIFERITO ALL'ASSE VELOCE

BA..2/C-D-P-L - **BA..**3/S - **B..**3/S-M

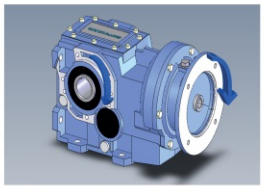

SENSO **ORARIO** RIFERITO ALL'ASSE VELOCE

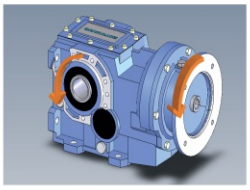

SENSO **ANTIORARIO** RIFERITO ALL'ASSE VELOCE

SENSO DI ROTAZIONE LIBERO ROTAZIONE OPPOSTA

BA..2/S - **BA..**3/C-D-P-L - **B..**3/C-D-P-L

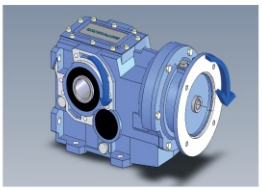

SENSO **ORARIO** RIFERITO ALL'ASSE VELOCE

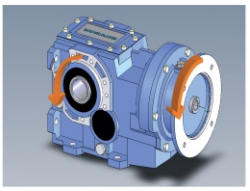

SENSO **ANTIORARIO** RIFERITO ALL'ASSE VELOCE

BA..2/C-D-P-L - **BA..**3/S - **B..**3/S-M

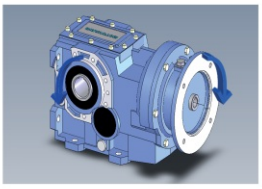

SENSO **ORARIO** RIFERITO ALL'ASSE VELOCE

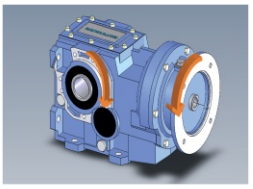

SENSO **ANTIORARIO** RIFERITO ALL'ASSE VELOCE

	063	071	080	090	100-112	132	160	180	200	225	250	280
	140x11	160x14	200x19	200x24	250x28	300x38	350x42	350x48	400x55	450x60	550x65	550x75
B063	B5	B5	B5	B5	B5							
B083			B5	B5	B5	B5						
B103			B5	B5	B5	B5	B5					
B123				B5	B5	B5	B5	B5				
B143					B5	B5	B5	B5	B5			
B153						B5	B5	B5	B5	B5		
B163							B5	B5	B5	B5	B5	B5

4.6 ALBERO LENTO CAVO CON CALETTATORE

Pulire e sgrassare le zone degli alberi interessati all'accoppiamento. Rispettare la coppia di serraggio viti indicata (M_T).

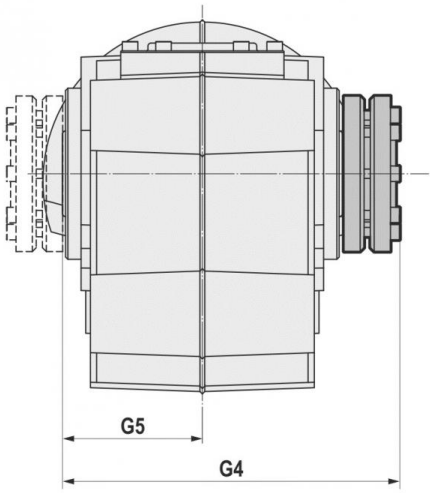

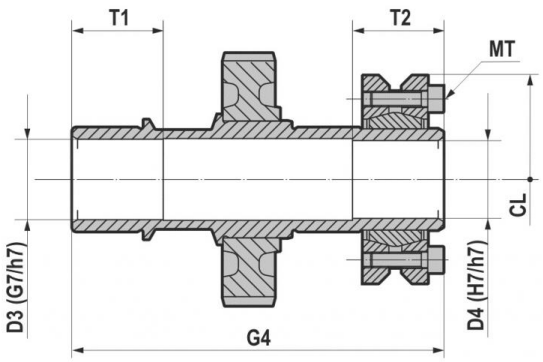

	D3	D4	G4	G5	T1	T2	CL	M_T 12,9 [Nm]
BA42	24	24	130	50	25	35	72	15
BA52-BA53	31	30	143	56	35	35	80	15
BA72-BA73	36	35	173	70	40	35	80	15
B063	36	35	173	70	40	35	80	15
B083	41	40	217	90	50	40	100	15
B103	51	50	248	105	55	40	115	15
B123	61	60	282	120	60	50	145	40
B143	72	70	355	150	70	65	170	50
B153	92	90	415	175	80	75	184	70
B163	102	100	512	222,5	100	100	215	70

4.7 TENUTE RINFORZATE ASSE LENTO

La tenuta rinforzata viene realizzata a seconda della grandezza o tramite due anelli di tenuta o tramite anello di tenuta standard con anello VRM. La differenza tra le due soluzioni è chiarita dai disegni.
A richiesta il riduttore può essere fornito di tenute in mescola fluorata FPM (FKM).

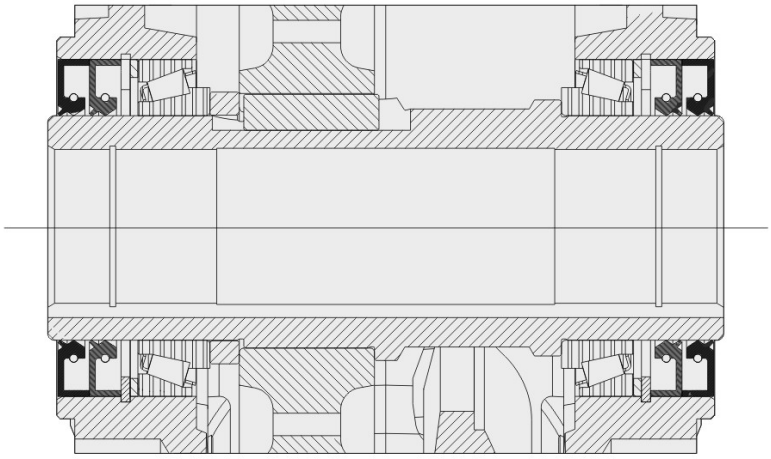

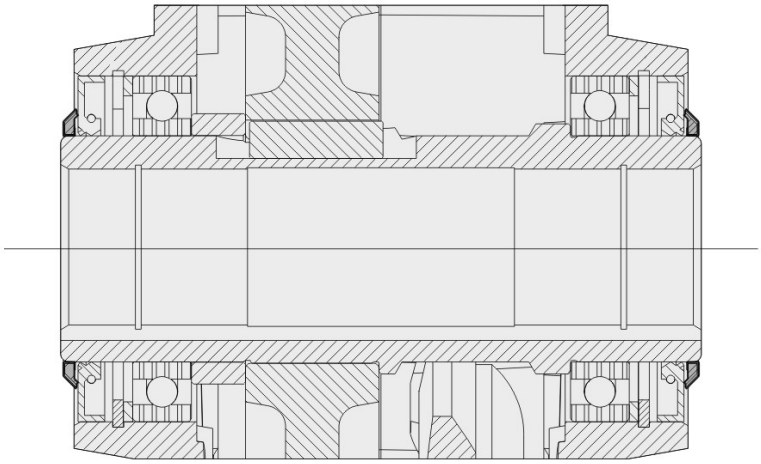

	Doppio anello	Anello VRM
B063		x
B083		x
B103		x
B123		x
B143	x	
B153	x	
B163	x	

4.8 KIT MONTAGGIO/SMONTAGGIO

Kit di smontaggio/montaggio dei riduttori ad albero cavo con linguetta. A richiesta la fornitura comprende:

1. Vite di fissaggio
2. Anello di sicurezza
3. Dado a nasello
4. Dischetto di spinta

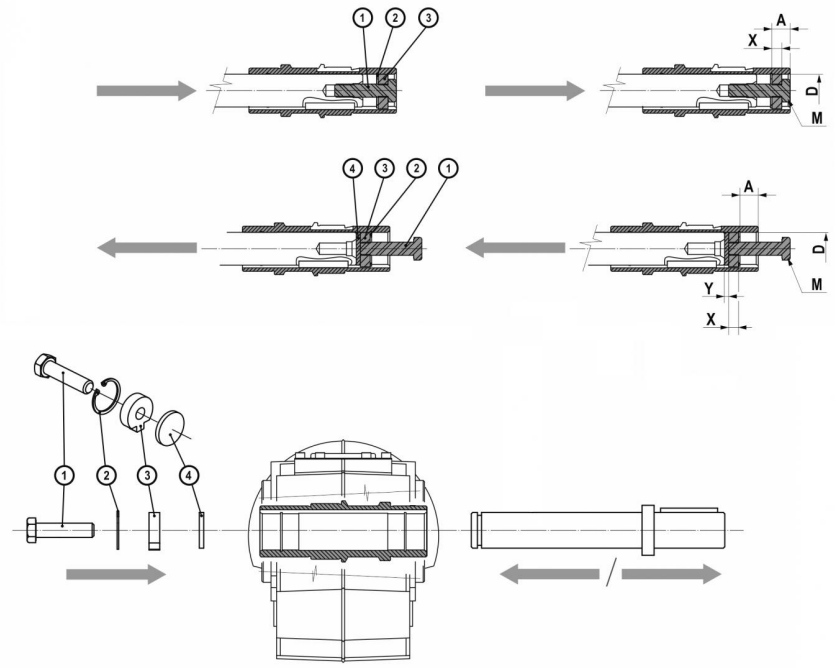

	D	A	X	Y	M
BA42	20	-	-	-	-
BA52/BA53	25	-	-	-	-
	28				
BA72/BA73	25	12	12	5	M12x45
	30	13,8	10		M10x35
B063	35	12	12	5	M12x45
	40				M16x50
B083	40	22,25	12	5	M16x50
	45				
B103	50	25	12	5	M16x50
B123	60	28	16	5	M20x70
B143	70	27,5	16	5	M20x70
B153	90	34	20	5	M24x60
B163	100	40	20	5	M24x120

5.1 B/BA MOTORIDUTTORE (50Hz)

0.09 kW

n2 [rpm]	M2 [Nm]	fs	i	Riduttore	Motore	Fr2 D-S-P [N]	Fr2 C [N]
25.5	32	3.9	33.78	BA42	63A6	-	3507
18.3	45	2.8	47.12	BA42	63A6	-	3918
15.0	55	2.3	57.43	BA42	63A6	-	4000
13.4	61	1.9	64.13	BA42	63A6	-	4000
13.3	62	3.4	64.87	BA52	63A6	-	4000
11.7	67	3.5	73.70	BA53	63A6	-	4000
11.0	75	1.5	78.17	BA42	63A6	-	4000
10.9	76	2.8	79.07	BA52	63A6	-	4000
9.2	85	2.7	93.33	BA53	63A6	-	4000
7.7	101	2.3	111.61	BA53	63A6	-	4000
6.3	124	1.9	136.53	BA53	63A6	-	4000
5.7	136	3.5	149.73	BA73	63A6	10000	5500
5.0	157	1.5	172.53	BA53	63A6	-	4000
4.8	164	2.9	180.23	BA73	63A6	10000	5500
4.4	179	1.3	197.11	BA53	63A6	-	4000
3.9	203	2.3	222.93	BA73	63A6	10000	5500
3.5	226	1.0	249.08	BA53	63A6	-	4000
3.3	236	2.0	260.20	BA73	63A6	10000	5500
3.2	246	0.9	271.16	BA53	63A6	-	4000
2.7	292	1.6	321.85	BA73	63A6	10000	5500
2.4	325	1.5	357.95	BA73	63A6	10000	5500
1.9	402	1.2	442.76	BA73	63A6	10000	5500

0.12 kW

n2 [rpm]	M2 [Nm]	fs	i	Riduttore	Motore	Fr2 D-S-P [N]	Fr2 C [N]
30.7	36	3.5	28.00	BA42	63B6	-	3294
28.4	38	3.1	47.12	BA42	63A4	-	3379
27.5	40	3.2	31.27	BA42	63B6	-	3417
25.5	43	2.9	33.78	BA42	63B6	-	3507
23.3	47	2.6	57.43	BA42	63A4	-	3610
20.9	52	2.1	64.13	BA42	63A4	-	3745
20.7	53	3.8	64.87	BA52	63A4	-	4000
20.5	54	3.9	41.97	BA52	63B6	-	4000
18.3	60	2.1	47.12	BA42	63B6	-	3918
18.2	57	3.9	73.70	BA53	63A4	-	4000
17.1	64	1.7	78.17	BA42	63A4	-	4000
16.9	64	3.1	79.07	BA52	63A4	-	4000
16.8	66	3.5	51.34	BA52	63B6	-	4000
15.0	73	1.7	57.43	BA42	63B6	-	4000
14.4	72	3.1	93.33	BA53	63A4	-	4000
13.4	82	1.4	64.13	BA42	63B6	-	4000
13.3	83	2.5	64.87	BA52	63B6	-	4000
12.0	86	2.6	111.61	BA53	63A4	-	4000

5.1 B/BA MOTORIDUTTORE (50Hz)

0.12 kW

n2 [rpm]	M2 [Nm]	fs	i	Riduttore	Motore	Fr2 D-S-P [N]	Fr2 C [N]
11.7	89	2.6	73.70	BA53	63B6	-	4000
11.0	100	1.2	78.17	BA42	63B6	-	4000
10.9	101	2.1	79.07	BA52	63B6	-	4000
9.8	105	2.1	136.53	BA53	63A4	-	4000
9.2	113	2.0	93.33	BA53	63B6	-	4000
8.9	115	3.9	149.73	BA73	63A4	10000	5500
7.8	133	1.7	172.53	BA53	63A4	-	4000
7.7	135	1.7	111.61	BA53	63B6	-	4000
7.4	139	3.2	180.23	BA73	63A4	10000	5500
7.1	146	3.2	120.34	BA73	63B6	10000	5500
6.8	152	1.5	197.11	BA53	63A4	-	4000
6.3	165	1.4	136.53	BA53	63B6	-	4000
6.2	169	3.7	139.15	B063	63B6	12000	7811
6.0	172	2.6	222.93	BA73	63A4	10000	5500
5.7	181	2.6	149.73	BA73	63B6	10000	5500
5.5	191	3.3	157.42	B063	63B6	12000	8000
5.4	192	1.1	249.08	BA53	63A4	-	4000
5.1	200	2.2	260.20	BA73	63A4	10000	5500
5.0	209	1.1	172.53	BA53	63B6	-	4000
4.9	209	1.1	271.16	BA53	63A4	-	4000
4.8	218	2.2	180.23	BA73	63B6	10000	5500
4.4	239	1.0	197.11	BA53	63B6	-	4000
4.2	248	1.8	321.85	BA73	63A4	10000	5500
3.9	270	1.7	222.93	BA73	63B6	10000	5500
3.7	276	1.6	357.95	BA73	63A4	10000	5500
3.3	315	1.5	260.20	BA73	63B6	10000	5500
3.0	341	1.3	442.76	BA73	63A4	10000	5500
2.7	390	1.2	321.85	BA73	63B6	10000	5500
2.4	434	1.1	357.95	BA73	63B6	10000	5500

0.15 kW

n2 [rpm]	M2 [Nm]	fs	i	Riduttore	Motore	Fr2 D-S-P [N]	Fr2 C [N]
56.0	25	3.9	14.46	BA42	63C6	-	2696
35.3	39	3.2	22.97	BA42	63C6	-	3146
28.9	48	2.7	28.00	BA42	63C6	-	3360
25.9	53	2.4	31.27	BA42	63C6	-	3486
25.6	54	3.9	31.63	BA52	63C6	-	3750
24.0	57	2.2	33.78	BA42	63C6	-	3577
23.1	60	3.5	35.10	BA52	63C6	-	3882
19.3	71	2.9	41.97	BA52	63C6	-	4000
17.2	80	1.6	47.12	BA42	63C6	-	3997
15.8	87	2.7	51.34	BA52	63C6	-	4000
14.1	97	1.3	57.43	BA42	63C6	-	4000

5.1 B/BA MOTORIDUTTORE (50Hz)

0.15 kW

n2 [rpm]	M2 [Nm]	fs	i	Riduttore	Motore	Fr2 D-S-P [N]	Fr2 C [N]
12.6	109	1.1	64.13	BA42	63C6	-	4000
12.5	110	1.9	64.87	BA52	63C6	-	4000
11.0	118	1.9	73.70	BA53	63C6	-	4000
10.2	134	1.6	79.07	BA52	63C6	-	4000
10.0	130	3.6	80.83	BA73	63C6	10000	5500
8.7	150	1.5	93.33	BA53	63C6	-	4000
8.3	156	3.0	97.29	BA73	63C6	10000	5500
8.0	163	3.9	101.20	B063	63C6	12000	7162
7.3	179	1.3	111.61	BA53	63C6	-	4000
7.2	180	3.5	111.74	B063	63C6	12000	7385
6.7	193	2.4	120.34	BA73	63C6	10000	5500
6.5	200	3.2	124.20	B063	63C6	12000	7630
5.9	219	1.1	136.53	BA53	63C6	-	4000
5.8	224	2.8	139.15	B063	63C6	12000	7900
5.4	241	2.0	149.73	BA73	63C6	10000	5500
5.1	253	2.5	157.42	B063	63C6	12000	8000
4.5	290	1.6	180.23	BA73	63C6	10000	5500
3.6	358	1.3	222.93	BA73	63C6	10000	5500
3.1	418	1.1	260.20	BA73	63C6	10000	5500
2.5	517	0.9	321.85	BA73	63C6	10000	5500

0.18 kW

n2 [rpm]	M2 [Nm]	fs	i	Riduttore	Motore	Fr2 D-S-P [N]	Fr2 C [N]
69.5	24	4.0	12.95	BA42	71A6	-	2509
62.2	26	3.6	14.46	BA42	71A6	-	2603
59.4	27	3.4	47.12	BA42	63A2	-	2643
48.8	32	2.8	57.43	BA42	63A2	-	2824
47.5	34	3.5	28.00	BA42	63B4	-	2848
43.7	36	2.3	64.13	BA42	63A2	-	2929
42.5	38	3.1	31.27	BA42	63B4	-	2955
39.4	41	2.9	33.78	BA42	63B4	-	3032
39.2	42	3.0	22.97	BA42	71A6	-	3037
35.8	44	1.9	78.17	BA42	63A2	-	3129
35.4	45	3.4	79.07	BA52	63A2	-	3366
32.1	51	2.5	28.00	BA42	71A6	-	3244
31.7	52	3.9	41.97	BA52	63B4	-	3492
30.0	50	3.3	93.33	BA53	63A2	-	3557
28.8	57	2.2	31.27	BA42	71A6	-	3366
28.5	58	3.6	31.63	BA52	71A6	-	3620
28.2	58	2.1	47.12	BA42	63B4	-	3388
26.6	62	2.0	33.78	BA42	71A6	-	3454
25.9	63	3.5	51.34	BA52	63B4	-	3735
25.6	64	3.3	35.10	BA52	71A6	-	3748

5.1 B/BA MOTORIDUTTORE (50Hz)

0.18 kW

n2 [rpm]	M2 [Nm]	fs	i	Riduttore	Motore	Fr2 D-S-P [N]	Fr2 C [N]
25.1	60	2.8	111.61	BA53	63A2	-	3775
23.2	71	1.7	57.43	BA42	63B4	-	3619
21.4	77	2.7	41.97	BA52	71A6	-	3978
20.7	79	1.4	64.13	BA42	63B4	-	3754
20.5	80	2.5	64.87	BA52	63B4	-	4000
20.5	73	2.3	136.53	BA53	63A2	-	4000
19.1	86	1.5	47.12	BA42	71A6	-	3859
18.0	86	2.6	73.70	BA53	63B4	-	4000
17.5	94	2.5	51.34	BA52	71A6	-	4000
17.0	96	1.1	78.17	BA42	63B4	-	4000
16.8	97	2.1	79.07	BA52	63B4	-	4000
16.2	92	1.8	172.53	BA53	63A2	-	4000
15.7	105	1.2	57.43	BA42	71A6	-	4000
15.5	96	3.5	180.23	BA73	63A2	10000	5500
14.3	109	2.0	93.33	BA53	63B4	-	4000
14.2	105	1.6	197.11	BA53	63A2	-	4000
14.0	118	1.0	64.13	BA42	71A6	-	4000
13.9	119	1.8	64.87	BA52	71A6	-	4000
13.7	113	4.0	97.29	BA73	63B4	10000	5500
12.6	119	2.8	222.93	BA73	63A2	10000	5500
12.2	128	1.8	73.70	BA53	71A6	-	4000
11.9	130	1.7	111.61	BA53	63B4	-	4000
11.4	145	1.4	79.07	BA52	71A6	-	4000
11.2	133	1.2	249.08	BA53	63A2	-	4000
11.1	140	3.4	80.83	BA73	71A6	10000	5500
11.1	140	3.2	120.34	BA73	63B4	10000	5500
10.8	139	2.4	260.20	BA73	63A2	10000	5500
10.3	145	1.1	271.16	BA53	63A2	-	4000
9.7	159	1.4	136.53	BA53	63B4	-	4000
9.6	162	3.7	139.15	B063	63B4	12000	6744
9.6	162	1.4	93.33	BA53	71A6	-	4000
9.3	169	2.8	97.29	BA73	71A6	10000	5500
8.9	176	3.6	101.20	B063	71A6	12000	6893
8.9	174	2.6	149.73	BA73	63B4	10000	5500
8.7	172	2.0	321.85	BA73	63A2	10000	5500
8.4	183	3.3	157.42	B063	63B4	12000	7005
8.1	194	3.2	111.74	B063	71A6	12000	7106
8.1	194	1.2	111.61	BA53	71A6	-	4000
7.8	191	1.8	357.95	BA73	63A2	10000	5500
7.7	201	1.1	172.53	BA53	63B4	-	4000
7.5	209	2.3	120.34	BA73	71A6	10000	5500
7.4	210	2.1	180.23	BA73	63B4	10000	5500
7.2	216	2.9	124.20	B063	71A6	12000	7340
6.7	229	1.0	197.11	BA53	63B4	-	4000
6.6	237	1.0	136.53	BA53	71A6	-	4000

5.1 B/BA MOTORIDUTTORE (50Hz)

0.18 kW

n2 [rpm]	M2 [Nm]	fs	i	Riduttore	Motore	Fr2 D-S-P [N]	Fr2 C [N]
6.5	242	2.6	139.15	B063	71A6	12000	7597
6.3	236	1.4	442.76	BA73	63A2	10000	5500
6.0	260	1.8	149.73	BA73	71A6	10000	5500
6.0	259	1.7	222.93	BA73	63B4	10000	5500
5.7	273	2.3	157.42	B063	71A6	12000	7885
5.1	303	1.5	260.20	BA73	63B4	10000	5500
5.0	313	1.5	180.23	BA73	71A6	10000	5500
4.1	374	1.2	321.85	BA73	63B4	10000	5500
4.0	387	1.2	222.93	BA73	71A6	10000	5500
3.7	416	1.1	357.95	BA73	63B4	10000	5500
3.5	452	1.0	260.20	BA73	71A6	10000	5500

0.22 kW

n2 [rpm]	M2 [Nm]	fs	i	Riduttore	Motore	Fr2 D-S-P [N]	Fr2 C [N]
57.9	34	3.5	22.97	BA42	63C4	-	2667
47.5	42	2.9	28.00	BA42	63C4	-	2848
42.5	47	2.6	31.27	BA42	63C4	-	2955
39.4	51	2.4	33.78	BA42	63C4	-	3032
37.9	53	3.8	35.10	BA52	63C4	-	3290
31.7	63	3.2	41.97	BA52	63C4	-	3492
28.2	71	1.7	47.12	BA42	63C4	-	3388
25.9	77	2.9	51.34	BA52	63C4	-	3735
23.2	86	1.4	57.43	BA42	63C4	-	3619
20.7	96	1.1	64.13	BA42	63C4	-	3754
20.5	97	2.1	64.87	BA52	63C4	-	4000
18.0	105	2.1	73.70	BA53	63C4	-	4000
17.0	117	0.9	78.17	BA42	63C4	-	4000
16.8	119	1.7	79.07	BA52	63C4	-	4000
16.5	115	3.9	80.83	BA73	63C4	10000	5500
14.3	133	1.7	93.33	BA53	63C4	-	4000
13.7	138	3.3	97.29	BA73	63C4	10000	5500
11.9	159	3.8	111.74	B063	63C4	12000	6262
11.9	159	1.4	111.61	BA53	63C4	-	4000
11.1	171	2.6	120.34	BA73	63C4	10000	5500
10.7	177	3.4	124.20	B063	63C4	12000	6469
9.7	194	1.1	136.53	BA53	63C4	-	4000
9.6	198	3.0	139.15	B063	63C4	12000	6697
8.9	213	2.1	149.73	BA73	63C4	10000	5500
8.4	224	2.7	157.42	B063	63C4	12000	6953
7.4	256	1.8	180.23	BA73	63C4	10000	5500
6.0	317	1.4	222.93	BA73	63C4	10000	5500
5.1	370	1.2	260.20	BA73	63C4	10000	5500
4.1	458	1.0	321.85	BA73	63C4	10000	5500

5.1 B/BA MOTORIDUTTORE (50Hz)

0.25 kW

n2 [rpm]	M2 [Nm]	fs	i	Riduttore	Motore	Fr2 D-S-P [N]	Fr2 C [N]
96.1	24	3.8	14.46	BA42	71A4	-	2252
91.3	25	3.6	14.46	BA42	63D4	-	2291
89.6	24	3.7	31.27	BA42	63B2	-	2306
84.7	27	3.5	10.62	BA42	71B6	-	2349
82.9	26	3.4	33.78	BA42	63B2	-	2366
69.5	33	2.9	12.95	BA42	71B6	-	2509
62.2	37	2.6	14.46	BA42	71B6	-	2603
60.5	37	3.2	22.97	BA42	71A4	-	2628
59.4	37	2.4	47.12	BA42	63B2	-	2643
57.5	39	3.0	22.97	BA42	63D4	-	2673
54.6	42	3.0	16.47	BA42	71B6	-	2718
49.6	46	2.6	28.00	BA42	71A4	-	2807
48.8	45	2.0	57.43	BA42	63B2	-	2824
47.1	48	2.5	28.00	BA42	63D4	-	2855
44.5	51	2.4	31.27	BA42	71A4	-	2912
43.9	52	3.9	31.63	BA52	71A4	-	3132
43.7	50	1.6	64.13	BA42	63B2	-	2929
43.2	51	3.0	64.87	BA52	63B2	-	3151
42.2	54	2.2	31.27	BA42	63D4	-	2962
41.7	54	3.7	31.63	BA52	63D4	-	3186
41.1	55	2.2	33.78	BA42	71A4	-	2988
39.6	57	3.5	35.10	BA52	71A4	-	3242
39.2	58	2.2	22.97	BA42	71B6	-	3037
39.1	58	2.1	33.78	BA42	63D4	-	3040
38.0	55	3.0	73.70	BA53	63B2	-	3288
37.6	60	3.3	35.10	BA52	63D4	-	3299
36.0	64	3.3	25.03	BA52	71B6	-	3349
35.8	61	1.4	78.17	BA42	63B2	-	3129
35.4	62	2.4	79.07	BA52	63B2	-	3366
33.1	68	2.9	41.97	BA52	71A4	-	3441
32.1	71	1.8	28.00	BA42	71B6	-	3244
31.5	72	2.8	41.97	BA52	63D4	-	3501
30.0	69	2.4	93.33	BA53	63B2	-	3557
29.5	77	1.6	47.12	BA42	71A4	-	3338
28.8	80	1.6	31.27	BA42	71B6	-	3366
28.5	81	2.6	31.63	BA52	71B6	-	3620
28.0	81	1.5	47.12	BA42	63D4	-	3396
27.1	84	2.6	51.34	BA52	71A4	-	3681
26.6	86	1.5	33.78	BA42	71B6	-	3454
25.7	88	2.5	51.34	BA52	63D4	-	3745
25.6	89	2.4	35.10	BA52	71B6	-	3748
25.1	83	2.0	111.61	BA53	63B2	-	3775
24.2	94	1.3	57.43	BA42	71A4	-	3566
23.3	89	3.8	120.34	BA73	63B2	9807	4904
23.0	99	1.2	57.43	BA42	63D4	-	3628

5.1 B/BA MOTORIDUTTORE (50Hz)

0.25 kW

n2 [rpm]	M2 [Nm]	fs	i	Riduttore	Motore	Fr2 D-S-P [N]	Fr2 C [N]
21.7	105	1.1	64.13	BA42	71A4	-	3700
21.4	107	2.0	41.97	BA52	71B6	-	3978
21.4	106	1.9	64.87	BA52	71A4	-	3979
20.6	110	1.0	64.13	BA42	63D4	-	3764
20.5	101	1.6	136.53	BA53	63B2	-	4000
20.3	111	1.8	64.87	BA52	63D4	-	4000
19.1	120	1.1	47.12	BA42	71B6	-	3859
18.9	114	1.9	73.70	BA53	71A4	-	4000
18.7	111	3.0	149.73	BA73	63B2	10000	5274
17.9	120	1.8	73.70	BA53	63D4	-	4000
17.8	117	3.9	157.42	B063	63B2	12000	5514
17.6	129	1.6	79.07	BA52	71A4	-	4000
17.5	131	1.8	51.34	BA52	71B6	-	4000
17.2	125	3.6	80.83	BA73	71A4	10000	5424
17.0	127	3.7	52.83	BA73	71B6	10000	5441
16.7	136	1.5	79.07	BA52	63D4	-	4000
16.3	132	3.4	80.83	BA73	63D4	10000	5500
16.2	128	1.3	172.53	BA53	63B2	-	4000
15.5	133	2.5	180.23	BA73	63B2	10000	5500
14.9	144	1.5	93.33	BA53	71A4	-	4000
14.3	150	3.0	97.29	BA73	71A4	10000	5500
14.2	146	1.1	197.11	BA53	63B2	-	4000
14.1	152	1.4	93.33	BA53	63D4	-	4000
13.9	165	1.3	64.87	BA52	71B6	-	4000
13.8	158	3.0	65.35	BA73	71B6	10000	5500
13.7	156	3.8	101.20	B063	71A4	12000	5967
13.6	158	2.8	97.29	BA73	63D4	10000	5500
13.0	167	3.8	69.16	B063	71B6	12000	6064
13.0	165	3.6	101.20	B063	63D4	12000	6062
12.6	165	2.0	222.93	BA73	63B2	10000	5500
12.5	173	1.3	111.61	BA53	71A4	-	4000
12.4	173	3.5	111.74	B063	71A4	12000	6151
12.2	178	1.3	73.70	BA53	71B6	-	4000
11.8	182	3.3	111.74	B063	63D4	12000	6249
11.8	182	1.2	111.61	BA53	63D4	-	4000
11.6	187	3.4	77.48	B063	71B6	12000	6278
11.6	186	2.4	120.34	BA73	71A4	10000	5500
11.4	201	1.0	79.07	BA52	71B6	-	4000
11.2	192	3.1	124.20	B063	71A4	12000	6352
11.1	195	2.4	80.83	BA73	71B6	10000	5500
11.0	196	2.3	120.34	BA73	63D4	10000	5500
10.8	193	1.8	260.20	BA73	63B2	10000	5500
10.6	202	3.0	124.20	B063	63D4	12000	6453
10.2	211	1.0	136.53	BA53	71A4	-	4000
10.0	218	2.9	90.33	B063	71B6	12000	6577

5.1 B/BA MOTORIDUTTORE (50Hz)

0.25 kW

n2 [rpm]	M2 [Nm]	fs	i	Riduttore	Motore	Fr2 D-S-P [N]	Fr2 C [N]
10.0	215	2.8	139.15	B063	71A4	12000	6575
9.7	222	1.0	136.53	BA53	63D4	-	4000
9.6	225	1.0	93.33	BA53	71B6	-	4000
9.5	227	2.6	139.15	B063	63D4	12000	6678
9.3	235	2.0	97.29	BA73	71B6	10000	5500
9.3	231	1.9	149.73	BA73	71A4	10000	5500
8.9	244	2.6	101.20	B063	71B6	12000	6805
8.8	243	2.5	157.42	B063	71A4	12000	6823
8.8	244	1.8	149.73	BA73	63D4	10000	5500
8.7	238	1.4	321.85	BA73	63B2	10000	5500
8.4	256	2.3	157.42	B063	63D4	12000	6929
8.1	269	2.3	111.74	B063	71B6	12000	7009
7.8	265	1.3	357.95	BA73	63B2	10000	5500
7.7	279	1.6	180.23	BA73	71A4	10000	5500
7.5	290	1.6	120.34	BA73	71B6	10000	5500
7.3	293	1.5	180.23	BA73	63D4	10000	5500
7.2	299	2.1	124.20	B063	71B6	12000	7232
6.5	336	1.9	139.15	B063	71B6	12000	7476
6.3	328	1.0	442.76	BA73	63B2	10000	5500
6.2	345	1.3	222.93	BA73	71A4	10000	5500
6.0	361	1.3	149.73	BA73	71B6	10000	5500
5.9	363	1.2	222.93	BA73	63D4	10000	5500
5.7	380	1.7	157.42	B063	71B6	12000	7748
5.3	402	1.1	260.20	BA73	71A4	10000	5500
5.1	424	1.1	260.20	BA73	63D4	10000	5500
5.0	435	1.1	180.23	BA73	71B6	10000	5500
4.3	498	0.9	321.85	BA73	71A4	10000	5500

0.37 kW

n2 [rpm]	M2 [Nm]	fs	i	Riduttore	Motore	Fr2 D-S-P [N]	Fr2 C [N]
129.9	26	3.5	10.62	BA42	71B4	-	2037
123.4	27	3.4	7.62	BA42	80A6	-	2072
122.7	26	3.4	22.97	BA42	71A2	-	2076
121.4	27	3.4	22.97	BA42	63C2	-	2083
115.5	29	3.2	7.62	BA42	71C6	-	2118
106.6	31	2.9	12.95	BA42	71B4	-	2176
100.7	32	2.8	28.00	BA42	71A2	-	2217
99.6	33	2.8	28.00	BA42	63C2	-	2225
95.4	35	2.6	14.46	BA42	71B4	-	2257
90.2	36	2.5	31.27	BA42	71A2	-	2300
89.2	36	2.5	31.27	BA42	63C2	-	2308
88.5	38	2.5	10.62	BA42	80A6	-	2315
83.8	40	3.0	16.47	BA42	71B4	-	2357

5.1 B/BA MOTORIDUTTORE (50Hz)

0.37 kW

n2 [rpm]	M2 [Nm]	fs	i	Riduttore	Motore	Fr2 D-S-P [N]	Fr2 C [N]
83.5	39	2.3	33.78	BA42	71A2	-	2360
82.8	41	2.3	10.62	BA42	71C6	-	2366
82.6	39	2.3	33.78	BA42	63C2	-	2369
80.4	40	3.7	35.10	BA52	71A2	-	2561
79.5	41	3.7	35.10	BA52	63C2	-	2570
76.0	45	3.8	11.57	BA52	71C6	-	2609
72.6	47	2.0	12.95	BA42	80A6	-	2473
68.0	50	1.9	12.95	BA42	71C6	-	2528
67.2	48	3.1	41.97	BA52	71A2	-	2719
66.5	49	3.1	41.97	BA52	63C2	-	2728
65.0	52	1.8	14.46	BA42	80A6	-	2565
64.3	53	3.2	14.63	BA52	80A6	-	2759
60.9	56	1.7	14.46	BA42	71C6	-	2622
60.2	56	3.0	14.63	BA52	71C6	-	2820
60.1	56	2.1	22.97	BA42	71B4	-	2634
59.8	54	1.7	47.12	BA42	71A2	-	2637
59.2	55	1.6	47.12	BA42	63C2	-	2647
57.1	59	2.1	16.47	BA42	80A6	-	2679
55.1	61	3.3	25.03	BA52	71B4	-	2904
54.9	62	3.4	17.11	BA52	80A6	-	2907
54.9	59	2.8	51.34	BA52	71A2	-	2907
54.3	60	2.8	51.34	BA52	63C2	-	2918
53.4	63	2.0	16.47	BA42	71C6	-	2739
51.4	66	3.2	17.11	BA52	71C6	-	2972
49.3	68	1.8	28.00	BA42	71B4	-	2813
49.1	66	1.4	57.43	BA42	71A2	-	2817
48.6	67	1.3	57.43	BA42	63C2	-	2827
45.9	74	2.8	20.46	BA52	80A6	-	3086
44.1	76	1.6	31.27	BA42	71B4	-	2919
44.0	74	1.1	64.13	BA42	71A2	-	2922
43.6	77	2.6	31.63	BA52	71B4	-	3139
43.5	74	1.1	64.13	BA42	63C2	-	2933
43.5	75	2.0	64.87	BA52	71A2	-	3143
43.0	79	2.7	20.46	BA52	71C6	-	3154
43.0	75	2.0	64.87	BA52	63C2	-	3155
40.9	83	1.5	22.97	BA42	80A6	-	2994
40.9	82	1.5	33.78	BA42	71B4	-	2995
39.3	85	2.3	35.10	BA52	71B4	-	3250
38.3	89	1.4	22.97	BA42	71C6	-	3060
38.3	80	2.1	73.70	BA53	71A2	-	3280
37.9	81	2.0	73.70	BA53	63C2	-	3292
37.6	90	2.3	25.03	BA52	80A6	-	3300
35.7	91	1.7	79.07	BA52	71A2	-	3358
35.3	92	1.6	79.07	BA52	63C2	-	3370
35.2	96	2.2	25.03	BA52	71C6	-	3374

5.1 B/BA MOTORIDUTTORE (50Hz)

0.37 kW

n2 [rpm]	M2 [Nm]	fs	i	Riduttore	Motore	Fr2 D-S-P [N]	Fr2 C [N]
34.9	88	3.8	80.83	BA73	71A2	8568	4284
34.5	89	3.8	80.83	BA73	63C2	8599	4300
33.6	101	1.2	28.00	BA42	80A6	-	3198
32.9	102	2.0	41.97	BA52	71B4	-	3450
31.4	108	1.2	28.00	BA42	71C6	-	3269
30.2	102	1.6	93.33	BA53	71A2	-	3548
30.1	113	1.1	31.27	BA42	80A6	-	3317
29.9	103	1.6	93.33	BA53	63C2	-	3561
29.7	114	1.8	31.63	BA52	80A6	-	3568
29.3	115	1.0	47.12	BA42	71B4	-	3347
29.0	106	3.2	97.29	BA73	71A2	9115	4557
28.7	107	3.2	97.29	BA73	63C2	9147	4574
28.4	119	3.7	33.04	BA72	80A6	9172	4586
28.1	120	1.0	31.27	BA42	71C6	-	3391
27.8	122	1.0	33.78	BA42	80A6	-	3404
27.8	122	1.7	31.63	BA52	71C6	-	3647
26.9	125	1.8	51.34	BA52	71B4	-	3689
26.8	127	1.7	35.10	BA52	80A6	-	3694
26.1	122	3.7	52.83	BA73	71B4	9436	4718
26.0	130	1.0	33.78	BA42	71C6	-	3480
25.3	121	1.4	111.61	BA53	71A2	-	3766
25.2	122	3.7	111.74	B063	71A2	12000	4890
25.1	135	1.6	35.10	BA52	71C6	-	3776
25.0	123	3.7	111.74	B063	63C2	12000	4906
25.0	123	1.3	111.61	BA53	63C2	-	3780
23.4	131	2.6	120.34	BA73	71A2	9784	4892
23.2	132	2.5	120.34	BA73	63C2	9819	4910
23.0	147	2.8	40.87	BA72	80A6	9845	4923
22.7	135	3.3	124.20	B063	71A2	12000	5051
22.5	137	3.3	124.20	B063	63C2	12000	5068
22.4	151	1.4	41.97	BA52	80A6	-	3921
21.4	150	3.2	43.89	BA73	80A6	10000	5041
21.3	158	1.3	64.87	BA52	71B4	-	3989
21.1	151	3.0	65.35	BA73	71B4	10000	5065
21.0	162	1.3	41.97	BA52	71C6	-	4000
20.7	149	1.1	136.53	BA53	71A2	-	4000
20.6	165	2.2	45.64	BA72	80A6	10000	5107
20.4	158	4.0	43.22	B063	71C6	12000	5214
20.4	150	1.1	136.53	BA53	63C2	-	4000
20.3	151	3.0	139.15	B063	71A2	12000	5230
20.1	153	2.9	139.15	B063	63C2	12000	5247
20.0	159	3.8	69.16	B063	71B4	12000	5248
20.0	160	2.9	43.89	BA73	71C6	10000	5153
18.8	163	2.1	149.73	BA73	71A2	10000	5262
18.7	170	1.3	73.70	BA53	71B4	-	4000

5.1 B/BA MOTORIDUTTORE (50Hz)

0.37 kW

n2 [rpm]	M2 [Nm]	fs	i	Riduttore	Motore	Fr2 D-S-P [N]	Fr2 C [N]
18.6	165	2.0	149.73	BA73	63C2	10000	5280
18.5	174	3.6	50.81	B063	80A6	12000	5367
18.3	185	1.2	51.34	BA52	80A6	-	4000
17.9	171	2.6	157.42	B063	71A2	12000	5430
17.8	179	3.4	77.48	B063	71B4	12000	5431
17.8	181	2.6	52.83	BA73	80A6	10000	5362
17.7	173	2.6	157.42	B063	63C2	12000	5448
17.5	192	1.0	79.07	BA52	71B4	-	4000
17.3	185	3.4	50.81	B063	71C6	12000	5475
17.1	198	1.2	51.34	BA52	71C6	-	4000
17.1	198	1.9	54.94	BA72	80A6	10000	5433
17.1	186	2.4	80.83	BA73	71B4	10000	5437
16.7	193	2.5	52.83	BA73	71C6	10000	5482
16.5	195	3.2	56.93	B063	80A6	12000	5554
15.6	196	1.7	180.23	BA73	71A2	10000	5500
15.5	208	3.0	56.93	B063	71C6	12000	5665
15.5	198	1.7	180.23	BA73	63C2	10000	5500
15.3	208	2.9	90.33	B063	71B4	12000	5687
14.8	215	1.0	93.33	BA53	71B4	-	4000
14.4	223	2.1	65.35	BA73	80A6	10000	5500
14.2	224	2.0	97.29	BA73	71B4	10000	5500
13.8	245	1.5	67.96	BA72	80A6	10000	5500
13.6	236	2.7	69.16	B063	80A6	12000	5885
13.6	233	2.6	101.20	B063	71B4	12000	5883
13.6	236	3.8	69.14	B083	80A6	18000	9098
13.5	239	2.0	65.35	BA73	71C6	10000	5500
12.9	250	3.6	73.14	B083	80A6	18000	9257
12.8	252	0.9	73.70	BA53	80A6	-	4000
12.7	252	2.5	69.16	B063	71C6	12000	6001
12.6	243	1.4	222.93	BA73	71A2	10000	5500
12.5	245	1.4	222.93	BA73	63C2	10000	5500
12.3	258	2.3	111.74	B063	71B4	12000	6057
12.1	265	2.4	77.48	B063	80A6	12000	6085
11.6	276	3.2	80.76	B083	80A6	18000	9545
11.6	276	1.7	80.83	BA73	80A6	10000	5500
11.5	277	1.6	120.34	BA73	71B4	10000	5500
11.4	283	2.2	77.48	B063	71C6	12000	6203
11.1	286	2.1	124.20	B063	71B4	12000	6247
10.9	295	1.6	80.83	BA73	71C6	10000	5500
10.8	283	1.2	260.20	BA73	71A2	10000	5500
10.7	286	1.2	260.20	BA73	63C2	10000	5500
10.4	309	2.0	90.33	B063	80A6	12000	6362
10.2	315	2.8	92.19	B083	80A6	18000	9940
9.9	321	1.9	139.15	B063	71B4	12000	6455
9.7	330	1.9	90.33	B063	71C6	12000	6484

5.1 B/BA MOTORIDUTTORE (50Hz)

0.37 kW

n2 [rpm]	M2 [Nm]	fs	i	Riduttore	Motore	Fr2 D-S-P [N]	Fr2 C [N]
9.7	332	1.4	97.29	BA73	80A6	10000	5500
9.3	346	1.8	101.20	B063	80A6	12000	6573
9.3	344	2.6	100.57	B083	80A6	18000	10207
9.2	345	1.3	149.73	BA73	71B4	10000	5500
9.0	355	1.3	97.29	BA73	71C6	10000	5500
8.9	360	2.5	105.29	B083	80A6	18000	10350
8.8	363	1.7	157.42	B063	71B4	12000	6686
8.7	369	1.7	101.20	B063	71C6	12000	6697
8.4	382	1.7	111.74	B063	80A6	12000	6759
8.1	397	2.2	116.25	B083	80A6	18000	10664
7.9	408	1.5	111.74	B063	71C6	12000	6885
7.8	411	1.1	120.34	BA73	80A6	10000	5500
7.7	415	1.1	180.23	BA73	71B4	10000	5500
7.6	424	1.5	124.20	B063	80A6	12000	6962
7.4	433	2.1	126.76	B083	80A6	18000	10945
7.3	439	1.1	120.34	BA73	71C6	10000	5500
7.1	453	1.4	124.20	B063	71C6	12000	7090
6.8	475	1.3	139.15	B063	80A6	12000	7183
6.5	495	1.8	144.77	B083	80A6	18000	11387
6.5	494	3.8	144.69	B103	80A6	22000	14062
6.3	508	1.2	139.15	B063	71C6	12000	7313
6.3	512	0.9	149.73	BA73	80A6	10000	5500
6.0	538	1.2	157.42	B063	80A6	12000	7427
5.7	565	3.3	165.25	B103	80A6	22000	14653
5.6	575	1.1	157.42	B063	71C6	12000	7558

0.55 kW

n2 [rpm]	M2 [Nm]	fs	i	Riduttore	Motore	Fr2 D-S-P [N]	Fr2 C [N]
264.5	18	3.7	10.62	BA42	71B2	-	1607
217.0	22	3.0	12.95	BA42	71B2	-	1716
194.4	25	2.7	14.46	BA42	71B2	-	1781
183.8	27	3.3	7.62	BA42	80A4	-	1814
179.9	28	3.2	7.62	BA42	71C4	-	1827
170.6	28	3.2	16.47	BA42	71B2	-	1860
131.8	38	2.4	10.62	BA42	80A4	-	2027
129.0	39	2.3	10.62	BA42	71C4	-	2042
122.3	39	2.3	22.97	BA42	71B2	-	2078
122.1	41	2.3	7.62	BA42	80B6	-	2079
121.0	41	3.9	11.57	BA52	80A4	-	2235
118.4	42	3.8	11.57	BA52	71C4	-	2251
117.5	43	3.9	7.91	BA52	80B6	-	2256
112.3	43	3.5	25.03	BA52	71B2	-	2291
108.1	46	2.0	12.95	BA42	80A4	-	2165

5.1 B/BA MOTORIDUTTORE (50Hz)

0.55 kW

n2 [rpm]	M2 [Nm]	fs	i	Riduttore	Motore	Fr2 D-S-P [N]	Fr2 C [N]
105.8	47	1.9	12.95	BA42	71C4	-	2181
100.4	48	1.9	28.00	BA42	71B2	-	2220
98.3	51	3.3	9.46	BA52	80B6	-	2395
96.8	52	1.7	14.46	BA42	80A4	-	2246
95.7	52	3.1	14.63	BA52	80A4	-	2416
94.8	53	1.7	14.46	BA42	71C4	-	2263
93.7	53	3.0	14.63	BA52	71C4	-	2434
89.9	54	1.7	31.27	BA42	71B2	-	2303
88.8	54	2.8	31.63	BA52	71B2	-	2477
87.5	58	1.6	10.62	BA42	80B6	-	2323
85.0	59	2.0	16.47	BA42	80A4	-	2346
83.2	60	2.0	16.47	BA42	71C4	-	2363
83.2	58	1.6	33.78	BA42	71B2	-	2363
81.8	61	3.3	17.11	BA52	80A4	-	2546
80.4	63	2.7	11.57	BA52	80B6	-	2561
80.1	62	3.2	17.11	BA52	71C4	-	2564
80.1	60	2.5	35.10	BA52	71B2	-	2564
71.8	70	1.3	12.95	BA42	80B6	-	2481
68.4	73	2.7	20.46	BA52	80A4	-	2702
67.0	75	2.7	20.46	BA52	71C4	-	2722
67.0	72	2.1	41.97	BA52	71B2	-	2722
64.3	78	1.2	14.46	BA42	80B6	-	2574
63.6	79	2.1	14.63	BA52	80B6	-	2769
60.9	82	1.5	22.97	BA42	80A4	-	2621
59.6	84	1.4	22.97	BA42	71C4	-	2640
59.6	81	1.1	47.12	BA42	71B2	-	2640
56.5	89	1.4	16.47	BA42	80B6	-	2689
55.9	89	2.2	25.03	BA52	80A4	-	2890
54.7	91	2.2	25.03	BA52	71C4	-	2911
54.7	88	1.9	51.34	BA52	71B2	-	2911
54.4	93	2.3	17.11	BA52	80B6	-	2918
53.2	86	3.9	52.83	BA73	71B2	7445	3723
50.0	100	1.2	28.00	BA42	80A4	-	2800
48.9	102	1.2	28.00	BA42	71C4	-	2820
45.5	111	1.9	20.46	BA52	80B6	-	3097
44.8	111	1.1	31.27	BA42	80A4	-	2905
44.3	113	1.8	31.63	BA52	80A4	-	3124
43.8	114	1.1	31.27	BA42	71C4	-	2926
43.3	115	1.7	31.63	BA52	71C4	-	3147
43.3	111	1.3	64.87	BA52	71B2	-	3147
43.0	106	3.2	65.35	BA73	71B2	7992	3996
42.4	118	3.6	33.04	BA72	80A4	8031	4016
41.4	120	1.0	33.78	BA42	80A4	-	2981
40.6	123	1.0	33.78	BA42	71C4	-	3002
40.5	125	1.0	22.97	BA42	80B6	-	3004

5.1 B/BA MOTORIDUTTORE (50Hz)

0.55 kW

n2 [rpm]	M2 [Nm]	fs	i	Riduttore	Motore	Fr2 D-S-P [N]	Fr2 C [N]
39.9	125	1.6	35.10	BA52	80A4	-	3235
39.0	128	1.6	35.10	BA52	71C4	-	3258
38.1	120	1.4	73.70	BA53	71B2	-	3284
37.2	136	1.5	25.03	BA52	80B6	-	3312
36.3	126	3.6	77.48	B063	71B2	12000	4315
35.5	136	1.1	79.07	BA52	71B2	-	3362
34.8	131	2.6	80.83	BA73	71B2	8579	4289
34.3	146	2.7	40.87	BA72	80A4	8621	4311
33.9	149	3.0	27.45	BA72	80B6	8653	4326
33.4	150	1.3	41.97	BA52	80A4	-	3433
32.6	153	1.3	41.97	BA52	71C4	-	3458
31.9	148	3.0	43.89	BA73	80A4	8828	4414
31.2	151	3.0	43.89	BA73	71C4	8892	4446
31.1	147	3.1	90.33	B063	71B2	12000	4521
30.7	163	2.2	45.64	BA72	80A4	8944	4472
30.1	152	1.1	93.33	BA53	71B2	-	3553
29.4	171	1.2	31.63	BA52	80B6	-	3581
28.9	158	2.1	97.29	BA73	71B2	9125	4563
28.1	179	2.5	33.04	BA72	80B6	9204	4602
27.8	164	2.7	101.20	B063	71B2	12000	4678
27.8	172	3.7	33.43	B063	80B6	12000	4666
27.6	172	3.5	50.81	B063	80A4	12000	4681
27.3	183	1.2	51.34	BA52	80A4	-	3672
27.0	175	3.4	50.81	B063	71C4	12000	4711
26.7	187	1.2	51.34	BA52	71C4	-	3698
26.5	190	1.1	35.10	BA52	80B6	-	3707
26.5	178	2.5	52.83	BA73	80A4	9391	4696
25.9	182	2.5	52.83	BA73	71C4	9459	4730
25.5	196	1.8	54.94	BA72	80A4	9515	4757
25.1	181	2.5	111.74	B063	71B2	12000	4819
24.6	192	3.1	56.93	B063	80A4	12000	4842
24.1	198	3.2	38.58	B063	80B6	12000	4868
24.1	196	3.1	56.93	B063	71C4	12000	4873
23.4	195	1.7	120.34	BA73	71B2	9796	4898
22.8	221	1.9	40.87	BA72	80B6	9880	4940
22.6	202	2.2	124.20	B063	71B2	12000	4972
22.2	227	0.9	41.97	BA52	80B6	-	3935
22.0	215	3.9	63.74	B083	80A4	18000	7750
21.5	222	2.8	43.22	B063	80B6	12000	5033
21.4	221	2.0	65.35	BA73	80A4	10000	5041
21.2	225	2.1	43.89	BA73	80B6	10000	5059
21.0	225	2.0	65.35	BA73	71C4	10000	5077
20.6	242	1.4	67.96	BA72	80A4	10000	5107
20.5	233	3.8	45.44	B083	80B6	18000	7918
20.4	247	1.5	45.64	BA72	80B6	10000	5126

5.1 B/BA MOTORIDUTTORE (50Hz)

0.55 kW

n2 [rpm]	M2 [Nm]	fs	i	Riduttore	Motore	Fr2 D-S-P [N]	Fr2 C [N]
20.2	234	2.6	69.16	B063	80A4	12000	5126
20.2	226	2.0	139.15	B063	71B2	12000	5141
20.2	233	3.6	69.14	B083	80A4	18000	7947
19.8	239	2.5	69.16	B063	71C4	12000	5159
19.1	247	3.4	73.14	B083	80A4	18000	8085
18.8	243	1.4	149.73	BA73	71B2	10000	5268
18.3	261	2.4	50.81	B063	80B6	12000	5274
18.2	263	3.4	51.19	B083	80B6	18000	8212
18.1	262	2.3	77.48	B063	80A4	12000	5297
17.9	256	1.8	157.42	B063	71B2	12000	5328
17.7	267	2.2	77.48	B063	71C4	12000	5331
17.6	271	1.7	52.83	BA73	80B6	10000	5382
17.3	273	3.1	80.76	B083	80A4	18000	8333
17.3	273	1.6	80.83	BA73	80A4	10000	5411
17.0	279	1.6	80.83	BA73	71C4	10000	5450
16.9	298	1.2	54.94	BA72	80B6	10000	5452
16.7	285	3.1	55.52	B083	80B6	18000	8418
16.3	292	2.2	56.93	B063	80B6	12000	5448
15.6	293	1.2	180.23	BA73	71B2	10000	5500
15.5	305	2.0	90.33	B063	80A4	12000	5534
15.5	308	2.9	59.96	B083	80B6	18000	8616
15.2	312	1.9	90.33	B063	71C4	12000	5568
15.2	311	2.7	92.19	B083	80A4	18000	8675
14.6	327	2.7	63.74	B083	80B6	18000	8777
14.4	329	1.4	97.29	BA73	80A4	10000	5500
14.2	335	1.4	65.35	BA73	80B6	10000	5500
14.1	336	1.3	97.29	BA73	71C4	10000	5500
13.9	340	2.5	100.57	B083	80A4	18000	8905
13.8	342	1.8	101.20	B063	80A4	12000	5713
13.7	368	1.0	67.96	BA72	80B6	10000	5500
13.5	349	1.7	101.20	B063	71C4	12000	5748
13.5	355	2.5	69.14	B083	80B6	18000	8994
13.4	355	1.8	69.16	B063	80B6	12000	5754
13.3	356	2.4	105.29	B083	80A4	18000	9029
12.7	376	2.4	73.14	B083	80B6	18000	9146
12.5	377	1.6	111.74	B063	80A4	12000	5872
12.3	386	1.6	111.74	B063	71C4	12000	5907
12.0	398	1.6	77.48	B063	80B6	12000	5936
12.0	393	2.2	116.25	B083	80A4	18000	9300
11.6	406	1.1	120.34	BA73	80A4	10000	5500
11.5	415	2.2	80.76	B083	80B6	18000	9419
11.5	415	1.1	80.83	BA73	80B6	10000	5500
11.4	415	1.1	120.34	BA73	71C4	10000	5500
11.3	419	1.4	124.20	B063	80A4	12000	6043
11.0	429	1.4	124.20	B063	71C4	12000	6079

5.1 B/BA MOTORIDUTTORE (50Hz)

0.55 kW

n2 [rpm]	M2 [Nm]	fs	i	Riduttore	Motore	Fr2 D-S-P [N]	Fr2 C [N]
11.0	428	2.0	126.76	B083	80A4	18000	9541
10.3	464	1.4	90.33	B063	80B6	12000	6186
10.1	470	1.3	139.15	B063	80A4	12000	6230
10.1	473	1.9	92.19	B083	80B6	18000	9793
10.1	474	4.0	92.31	B103	80B6	22000	12129
9.8	480	1.2	139.15	B063	71C4	12000	6266
9.7	489	1.7	144.77	B083	80A4	18000	9920
9.7	489	3.7	144.69	B103	80A4	22000	12285
9.6	499	0.9	97.29	BA73	80B6	10000	5500
9.2	520	1.2	101.20	B063	80B6	12000	6373
9.2	516	1.7	100.57	B083	80B6	18000	10045
8.9	532	1.1	157.42	B063	80A4	12000	6435
8.8	541	1.7	105.29	B083	80B6	18000	10179
8.8	541	3.5	105.44	B103	80B6	22000	12635
8.7	543	1.1	157.42	B063	71C4	12000	6471
8.5	558	3.2	165.25	B103	80A4	22000	12796
8.3	574	1.1	111.74	B063	80B6	12000	6538
8.1	589	3.2	114.80	B103	80B6	22000	12968
8.0	597	1.5	116.25	B083	80B6	18000	10473
7.7	618	3.1	120.42	B103	80B6	22000	13158
7.5	638	1.0	124.20	B063	80B6	12000	6714
7.3	651	1.4	126.76	B083	80B6	18000	10734
7.0	682	2.8	132.87	B103	80B6	22000	13557
6.4	743	1.2	144.77	B083	80B6	18000	11142
6.4	743	2.5	144.69	B103	80B6	22000	13909
5.6	848	2.2	165.25	B103	80B6	22000	14473

0.75 kW

n2 [rpm]	M2 [Nm]	fs	i	Riduttore	Motore	Fr2 D-S-P [N]	Fr2 C [N]
372.9	18	3.8	7.62	BA42	80A2	-	1433
367.6	18	3.8	7.62	BA42	71C2	-	1440
267.3	25	2.7	10.62	BA42	80A2	-	1601
263.6	25	2.7	10.62	BA42	71C2	-	1609
219.3	30	2.3	12.95	BA42	80A2	-	1710
216.3	30	2.2	12.95	BA42	71C2	-	1719
194.4	34	2.0	14.46	BA42	80A2	-	1781
194.2	34	3.5	14.63	BA52	80A2	-	1909
193.7	34	2.0	14.46	BA42	71C2	-	1783
191.4	34	3.5	14.63	BA52	71C2	-	1918
183.8	37	2.4	7.62	BA42	80B4	-	1814
172.4	38	2.4	16.47	BA42	80A2	-	1853
170.0	39	2.3	16.47	BA42	71C2	-	1862
166.0	40	3.8	17.11	BA52	80A2	-	2011

5.1 B/BA MOTORIDUTTORE (50Hz)

0.75 kW

n2 [rpm]	M2 [Nm]	fs	i	Riduttore	Motore	Fr2 D-S-P [N]	Fr2 C [N]
163.6	40	3.7	17.11	BA52	71C2	-	2021
148.0	46	3.5	9.46	BA52	80B4	-	2090
137.3	48	3.1	20.46	BA52	80A2	-	2142
136.8	48	3.1	20.46	BA52	71C2	-	2145
131.8	52	1.7	10.62	BA42	80B4	-	2027
122.3	54	1.7	22.97	BA42	80A2	-	2078
121.9	54	1.7	22.97	BA42	71C2	-	2081
121.0	56	2.8	11.57	BA52	80B4	-	2235
120.8	57	1.7	7.62	BA42	80C6	-	2087
116.3	59	2.8	7.91	BA52	80C6	-	2264
116.3	59	2.8	7.91	BA52	90S6	-	2264
113.5	58	2.6	25.03	BA52	80A2	-	2283
111.9	59	2.6	25.03	BA52	71C2	-	2294
108.1	63	1.4	12.95	BA42	80B4	-	2165
101.4	65	1.4	28.00	BA42	80A2	-	2212
100.0	66	1.4	28.00	BA42	71C2	-	2222
97.2	71	2.4	9.46	BA52	80C6	-	2403
97.2	71	2.4	9.46	BA52	90S6	-	2403
96.8	70	1.3	14.46	BA42	80B4	-	2246
95.7	71	2.3	14.63	BA52	80B4	-	2416
89.9	73	1.2	31.27	BA42	80A2	-	2303
89.6	73	1.2	31.27	BA42	71C2	-	2306
88.8	74	2.0	31.63	BA52	80A2	-	2477
88.5	74	2.0	31.63	BA52	71C2	-	2480
86.6	79	1.2	10.62	BA42	80C6	-	2332
85.0	80	1.5	16.47	BA42	80B4	-	2346
83.2	79	1.1	33.78	BA42	80A2	-	2363
82.9	79	1.1	33.78	BA42	71C2	-	2366
81.8	83	2.4	17.11	BA52	80B4	-	2546
80.1	82	1.8	35.10	BA52	80A2	-	2564
79.8	82	1.8	35.10	BA52	71C2	-	2567
79.5	86	1.9	11.57	BA52	80C6	-	2570
79.5	86	1.9	11.57	BA52	90S6	-	2570
73.9	93	4.0	12.44	BA72	90S6	6671	3335
71.1	97	1.0	12.95	BA42	80C6	-	2490
68.8	96	3.1	40.87	BA72	80A2	6834	3417
68.4	99	2.0	20.46	BA52	80B4	-	2702
67.0	98	1.5	41.97	BA52	80A2	-	2722
66.7	98	1.5	41.97	BA52	71C2	-	2725
64.0	97	3.5	43.89	BA73	80A2	6999	3499
63.8	98	3.5	43.89	BA73	71C2	7007	3504
62.9	109	1.5	14.63	BA52	80C6	-	2779
62.9	109	1.5	14.63	BA52	90S6	-	2779
61.7	111	4.0	14.91	BA72	90S6	7085	3542
61.6	107	2.5	45.64	BA72	80A2	7091	3545

5.1 B/BA MOTORIDUTTORE (50Hz)

0.75 kW

n2 [rpm]	M2 [Nm]	fs	i	Riduttore	Motore	Fr2 D-S-P [N]	Fr2 C [N]
60.9	112	1.1	22.97	BA42	80B4	-	2621
55.9	123	1.0	16.47	BA42	80C6	-	2698
55.9	122	1.6	25.03	BA52	80B4	-	2890
55.1	113	4.0	50.81	B063	71C2	12000	3754
54.7	120	1.4	51.34	BA52	80A2	-	2911
54.5	120	1.4	51.34	BA52	71C2	-	2914
53.8	128	1.6	17.11	BA52	80C6	-	2928
53.8	128	1.6	17.11	BA52	90S6	-	2928
53.2	117	2.9	52.83	BA73	80A2	7445	3723
53.0	117	2.9	52.83	BA73	71C2	7454	3727
51.3	134	3.3	17.94	BA72	90S6	7537	3768
51.1	133	0.9	28.00	BA42	80B4	-	2780
51.1	128	2.0	54.94	BA72	80A2	7543	3771
51.0	133	3.1	27.45	BA72	80B4	7550	3775
49.4	126	3.6	56.93	B063	80A2	12000	3882
49.2	126	3.6	56.93	B063	71C2	12000	3886
45.0	153	1.4	20.46	BA52	80C6	-	3108
45.0	153	1.4	20.46	BA52	90S6	-	3108
44.3	154	1.3	31.63	BA52	80B4	-	3124
43.8	150	1.0	64.87	BA52	80A2	-	3136
43.0	145	2.3	65.35	BA73	80A2	7992	3996
42.8	145	2.3	65.35	BA73	71C2	8001	4001
42.4	161	2.6	33.04	BA72	80B4	8031	4016
41.9	154	3.9	33.43	B063	80B4	12000	4071
41.5	166	2.7	22.19	BA72	90S6	8090	4045
41.3	159	1.7	67.96	BA72	80A2	8097	4048
41.1	158	4.0	22.39	B063	80C6	12000	4093
41.1	158	4.0	22.39	B063	90S6	12000	4093
40.6	153	2.9	69.16	B063	80A2	12000	4115
40.5	154	2.9	69.16	B063	71C2	12000	4120
39.9	171	1.2	35.10	BA52	80B4	-	3235
38.4	162	3.9	73.14	B083	80A2	18000	6464
38.1	163	1.0	73.70	BA53	80A2	-	3284
38.0	164	1.0	73.70	BA53	71C2	-	3288
36.8	187	1.1	25.03	BA52	80C6	-	3324
36.8	187	1.1	25.03	BA52	90S6	-	3324
36.3	172	2.6	77.48	B063	80A2	12000	4256
36.3	178	3.4	38.58	B063	80B4	12000	4247
36.1	172	2.6	77.48	B063	71C2	12000	4261
35.3	185	3.4	26.09	B063	80C6	12000	4281
35.3	185	3.4	26.09	B063	90S6	12000	4281
34.8	179	3.6	80.76	B083	80A2	18000	6666
34.8	179	1.9	80.83	BA73	80A2	8579	4289
34.6	180	1.9	80.83	BA73	71C2	8589	4294
34.3	199	2.0	40.87	BA72	80B4	8621	4311

5.1 B/BA MOTORIDUTTORE (50Hz)

0.75 kW

n2 [rpm]	M2 [Nm]	fs	i	Riduttore	Motore	Fr2 D-S-P [N]	Fr2 C [N]
33.5	205	2.2	27.45	BA72	80C6	8684	4342
33.5	205	2.2	27.45	BA72	90S6	8684	4342
33.4	204	1.0	41.97	BA52	80B4	-	3433
32.8	198	3.2	28.03	B063	80C6	12000	4372
32.8	198	3.2	28.03	B063	90S6	12000	4372
32.4	199	3.0	43.22	B063	80B4	12000	4391
31.9	202	2.2	43.89	BA73	80B4	8828	4414
31.1	200	2.3	90.33	B063	80A2	12000	4452
31.0	201	2.2	90.33	B063	71C2	12000	4457
30.7	222	1.6	45.64	BA72	80B4	8944	4472
30.5	204	3.1	92.19	B083	80A2	18000	6943
29.7	231	0.9	31.63	BA52	90S6	-	3568
28.9	225	4.0	31.80	B083	80C6	18000	7043
28.9	225	4.0	31.80	B083	90S6	18000	7043
28.9	215	1.6	97.29	BA73	80A2	9125	4563
28.8	216	1.6	97.29	BA73	71C2	9136	4568
27.9	223	2.9	100.57	B083	80A2	18000	7131
27.9	244	0.9	51.34	BA52	80B4	-	3646
27.8	224	2.0	101.20	B063	80A2	12000	4601
27.8	247	1.8	33.04	BA72	80C6	9238	4619
27.8	247	1.8	33.04	BA72	90S6	9238	4619
27.7	225	2.0	101.20	B063	71C2	12000	4606
27.6	234	2.6	50.81	B063	80B4	12000	4601
27.5	237	2.7	33.43	B063	80C6	12000	4599
27.5	237	2.7	33.43	B063	90S6	12000	4599
27.4	236	3.6	51.19	B083	80B4	18000	7168
26.7	244	3.7	34.49	B083	80C6	18000	7220
26.7	244	3.7	34.49	B083	90S6	18000	7220
26.7	233	2.7	105.29	B083	80A2	18000	7231
26.5	243	1.8	52.83	BA73	80B4	9391	4696
25.5	267	1.3	54.94	BA72	80B4	9515	4757
25.2	256	3.3	55.52	B083	80B4	18000	7347
25.1	248	1.8	111.74	B063	71C2	12000	4738
25.1	247	1.8	111.74	B063	80A2	12000	4734
24.6	262	2.3	56.93	B063	80B4	12000	4752
24.2	257	2.5	116.25	B083	80A2	18000	7453
23.8	273	2.3	38.58	B063	80C6	12000	4790
23.8	273	2.3	38.58	B063	90S6	12000	4790
23.4	276	3.1	59.96	B083	80B4	18000	7520
23.4	266	1.3	120.34	BA73	80A2	9796	4898
23.3	267	1.3	120.34	BA73	71C2	9807	4904
23.2	280	3.2	39.60	B083	80C6	18000	7528
23.2	280	3.2	39.60	B083	90S6	18000	7528
22.6	275	1.6	124.20	B063	80A2	12000	4877
22.5	276	1.6	124.20	B063	71C2	12000	4882

5.1 B/BA MOTORIDUTTORE (50Hz)

0.75 kW

n2 [rpm]	M2 [Nm]	fs	i	Riduttore	Motore	Fr2 D-S-P [N]	Fr2 C [N]
22.5	305	1.4	40.87	BA72	80C6	9916	4958
22.5	305	1.4	40.87	BA72	90S6	9916	4958
22.2	281	2.3	126.76	B083	80A2	18000	7650
22.0	293	2.9	63.74	B083	80B4	18000	7660
21.4	304	2.9	42.95	B083	80C6	18000	7714
21.4	304	2.9	42.95	B083	90S6	18000	7714
21.4	301	1.5	65.35	BA73	80B4	10000	5041
21.3	306	2.1	43.22	B063	80C6	12000	4944
21.3	306	2.1	43.22	B063	90S6	12000	4944
21.0	311	1.5	43.89	BA73	80C6	10000	5077
21.0	311	1.5	43.89	BA73	90S6	10000	5077
20.6	330	1.1	67.96	BA72	80B4	10000	5107
20.2	318	1.9	69.16	B063	80B4	12000	5017
20.2	308	1.5	139.15	B063	80A2	12000	5035
20.2	322	2.8	45.44	B083	80C6	18000	7845
20.2	322	2.8	45.44	B083	90S6	18000	7845
20.2	318	2.7	69.14	B083	80B4	18000	7848
20.2	341	1.1	45.64	BA72	80C6	10000	5144
20.2	341	1.1	45.64	BA72	90S6	10000	5144
20.1	309	1.5	139.15	B063	71C2	12000	5040
19.4	320	2.0	144.77	B083	80A2	18000	7961
19.1	337	2.5	73.14	B083	80B4	18000	7981
18.8	331	1.0	149.73	BA73	80A2	10000	5268
18.7	333	1.0	149.73	BA73	71C2	10000	5274
18.1	357	1.7	77.48	B063	80B4	12000	5175
18.1	360	1.8	50.81	B063	80C6	12000	5167
18.1	360	1.8	50.81	B063	90S6	12000	5167
18.0	362	2.5	51.19	B083	80C6	18000	8127
18.0	362	2.5	51.19	B083	90S6	18000	8127
17.9	348	1.3	157.42	B063	80A2	12000	5208
17.8	350	1.3	157.42	B063	71C2	12000	5213
17.4	374	1.3	52.83	BA73	80C6	10000	5401
17.4	374	1.3	52.83	BA73	90S6	10000	5401
17.3	372	2.3	80.76	B083	80B4	18000	8219
17.3	372	1.2	80.83	BA73	80B4	10000	5411
17.1	402	0.9	54.94	BA72	90S6	10000	5433
17.0	366	3.7	165.25	B103	80A2	22000	10232
16.6	393	2.3	55.52	B083	80C6	18000	8324
16.6	393	2.3	55.52	B083	90S6	18000	8324
16.2	403	1.6	56.93	B063	80C6	12000	5327
16.2	403	1.6	56.93	B063	90S6	12000	5327
15.5	416	1.4	90.33	B063	80B4	12000	5391
15.3	424	2.1	59.96	B083	80C6	18000	8513
15.3	424	2.1	59.96	B083	90S6	18000	8513
15.2	424	2.0	92.19	B083	80B4	18000	8544

5.1 B/BA MOTORIDUTTORE (50Hz)

0.75 kW

n2 [rpm]	M2 [Nm]	fs	i	Riduttore	Motore	Fr2 D-S-P [N]	Fr2 C [N]
14.4	451	2.0	63.74	B083	80C6	18000	8666
14.4	451	2.0	63.74	B083	90S6	18000	8666
14.4	448	1.0	97.29	BA73	80B4	10000	5500
14.2	459	3.9	64.89	B103	80C6	22000	10806
14.2	459	3.9	64.89	B103	90S6	22000	10806
14.1	462	1.0	65.35	BA73	80C6	10000	5500
14.1	462	1.0	65.35	BA73	90S6	10000	5500
13.9	463	1.8	100.57	B083	80B4	18000	8763
13.8	466	1.3	101.20	B063	80B4	12000	5553
13.4	485	3.7	68.58	B103	80C6	22000	10991
13.4	485	3.7	68.58	B103	90S6	22000	10991
13.3	489	1.3	69.16	B063	80C6	12000	5603
13.3	489	1.3	69.16	B063	90S6	12000	5603
13.3	489	1.8	69.14	B083	80C6	18000	8872
13.3	489	1.8	69.14	B083	90S6	18000	8872
13.3	485	1.8	105.29	B083	80B4	18000	8879
13.3	486	3.7	105.44	B103	80B4	22000	11030
12.6	518	1.7	73.14	B083	80C6	18000	9016
12.6	518	1.7	73.14	B083	90S6	18000	9016
12.6	515	3.5	72.76	B103	80C6	22000	11191
12.6	515	3.5	72.76	B103	90S6	22000	11191
12.5	515	1.2	111.74	B063	80B4	12000	5695
12.2	529	3.4	114.80	B103	80B4	22000	11319
12.0	535	1.6	116.25	B083	80B4	18000	9135
11.9	548	1.1	77.48	B063	80C6	12000	5765
11.9	548	1.1	77.48	B063	90S6	12000	5765
11.7	559	3.2	78.92	B103	80C6	22000	11471
11.7	559	3.2	78.92	B103	90S6	22000	11471
11.6	554	3.2	120.42	B103	80B4	22000	11485
11.4	572	1.6	80.76	B083	80C6	18000	9273
11.4	572	1.6	80.76	B083	90S6	18000	9273
11.3	572	1.0	124.20	B063	80B4	12000	5847
11.0	584	1.5	126.76	B083	80B4	18000	9361
11.0	592	3.2	83.66	B103	80C6	22000	11675
11.0	592	3.2	83.66	B103	90S6	22000	11675
10.5	612	2.9	132.87	B103	80B4	22000	11832
10.2	639	1.0	90.33	B063	80C6	12000	5984
10.1	641	0.9	139.15	B063	80B4	12000	6010
10.0	652	1.4	92.19	B083	80C6	18000	9623
10.0	652	1.4	92.19	B083	90S6	18000	9623
10.0	653	2.9	92.31	B103	80C6	22000	12026
10.0	653	2.9	92.31	B103	90S6	22000	12026
9.7	667	1.3	144.77	B083	80B4	18000	9715
9.7	666	2.7	144.69	B103	80B4	22000	12139
9.1	712	1.3	100.57	B083	80C6	18000	9857

5.1 B/BA MOTORIDUTTORE (50Hz)

0.75 kW

n2 [rpm]	M2 [Nm]	fs	i	Riduttore	Motore	Fr2 D-S-P [N]	Fr2 C [N]
9.1	712	1.3	100.57	B083	90S6	18000	9857
8.7	745	1.2	105.29	B083	80C6	18000	9981
8.7	745	1.2	105.29	B083	90S6	18000	9981
8.7	746	2.5	105.44	B103	80C6	22000	12514
8.7	746	2.5	105.44	B103	90S6	22000	12514
8.5	761	2.4	165.25	B103	80B4	22000	12630
8.0	812	2.3	114.80	B103	80C6	22000	12833
8.0	812	2.3	114.80	B103	90S6	22000	12833
7.9	823	1.1	116.25	B083	80C6	18000	10252
7.9	823	1.1	116.25	B083	90S6	18000	10252
7.6	852	2.2	120.42	B103	80C6	22000	13015
7.6	852	2.2	120.42	B103	90S6	22000	13015
7.3	897	1.0	126.76	B083	80C6	18000	10490
7.3	897	1.0	126.76	B083	90S6	18000	10490
7.1	920	4.0	129.96	B123	90S6	30000	18750
6.9	940	2.0	132.87	B103	80C6	22000	13395
6.9	940	2.0	132.87	B103	90S6	22000	13395
6.4	1024	1.8	144.69	B103	80C6	22000	13730
6.4	1024	1.8	144.69	B103	90S6	22000	13730
6.4	1022	3.6	144.43	B123	90S6	30000	19323
5.7	1134	3.2	160.23	B123	90S6	30000	19897
5.6	1169	1.6	165.25	B103	80C6	22000	14264
5.6	1169	1.6	165.25	B103	90S6	22000	14264
5.1	1277	2.9	180.40	B123	90S6	30000	20000

0.92 kW

n2 [rpm]	M2 [Nm]	fs	i	Riduttore	Motore	Fr2 D-S-P [N]	Fr2 C [N]
183.8	45	2.0	7.62	BA42	80C4	-	1814
176.9	47	3.4	7.91	BA52	80C4	-	1969
148.0	56	2.8	9.46	BA52	80C4	-	2090
131.8	63	1.4	10.62	BA42	80C4	-	2027
121.0	69	2.3	11.57	BA52	80C4	-	2235
108.1	77	1.2	12.95	BA42	80C4	-	2165
96.8	86	1.0	14.46	BA42	80C4	-	2246
95.7	87	1.8	14.63	BA52	80C4	-	2416
85.0	98	1.2	16.47	BA42	80C4	-	2346
81.8	102	2.0	17.11	BA52	80C4	-	2546
68.4	122	1.6	20.46	BA52	80C4	-	2702
55.9	149	1.3	25.03	BA52	80C4	-	2890
51.0	164	2.6	27.45	BA72	80C4	7550	3775
49.9	158	3.8	28.03	B063	80C4	12000	3825
44.3	189	1.1	31.63	BA52	80C4	-	3124
42.4	197	2.1	33.04	BA72	80C4	8031	4016

5.1 B/BA MOTORIDUTTORE (50Hz)

0.92 kW

n2 [rpm]	M2 [Nm]	fs	i	Riduttore	Motore	Fr2 D-S-P [N]	Fr2 C [N]
41.9	189	3.2	33.43	B063	80C4	12000	4026
39.9	209	1.0	35.10	BA52	80C4	-	3235
36.3	218	2.8	38.58	B063	80C4	12000	4195
35.4	224	3.8	39.60	B083	80C4	18000	6577
34.3	244	1.6	40.87	BA72	80C4	8621	4311
32.6	243	3.5	42.95	B083	80C4	18000	6741
32.4	244	2.5	43.22	B063	80C4	12000	4333
31.9	248	1.8	43.89	BA73	80C4	8828	4414
30.8	257	3.3	45.44	B083	80C4	18000	6857
30.7	272	1.3	45.64	BA72	80C4	8944	4472
27.6	287	2.1	50.81	B063	80C4	12000	4532
27.4	289	2.9	51.19	B083	80C4	18000	7106
26.5	298	1.5	52.83	BA73	80C4	9391	4696
25.5	328	1.1	54.94	BA72	80C4	9515	4757
25.2	314	2.7	55.52	B083	80C4	18000	7280
24.6	322	1.9	56.93	B063	80C4	12000	4675
23.4	339	2.5	59.96	B083	80C4	18000	7447
22.0	360	2.4	63.74	B083	80C4	18000	7583
21.4	369	1.2	65.35	BA73	80C4	10000	5041
20.2	391	1.5	69.16	B063	80C4	12000	4924
20.2	391	2.2	69.14	B083	80C4	18000	7765
19.1	413	2.1	73.14	B083	80C4	18000	7893
18.1	438	1.4	77.48	B063	80C4	12000	5071
17.7	446	3.8	78.92	B103	80C4	22000	10020
17.3	456	1.9	80.76	B083	80C4	18000	8121
17.3	457	1.0	80.83	BA73	80C4	10000	5411
16.7	473	3.8	83.66	B103	80C4	22000	10200
15.5	510	1.2	90.33	B063	80C4	12000	5270
15.2	521	1.6	92.19	B083	80C4	18000	8433
15.2	521	3.5	92.31	B103	80C4	22000	10509
13.9	568	1.5	100.57	B083	80C4	18000	8641
13.8	572	1.0	101.20	B063	80C4	12000	5417
13.3	595	1.4	105.29	B083	80C4	18000	8752
13.3	596	3.0	105.44	B103	80C4	22000	10939
12.5	631	1.0	111.74	B063	80C4	12000	5545
12.2	648	2.8	114.80	B103	80C4	22000	11221
12.0	657	1.3	116.25	B083	80C4	18000	8994
11.6	680	2.6	120.42	B103	80C4	22000	11382
11.0	716	1.2	126.76	B083	80C4	18000	9208
10.5	750	2.4	132.87	B103	80C4	22000	11718
9.7	818	1.0	144.77	B083	80C4	18000	9540
9.7	817	2.2	144.69	B103	80C4	22000	12015
8.5	933	1.9	165.25	B103	80C4	22000	12488

5.1 B/BA MOTORIDUTTORE (50Hz)

1.10 kW

n2 [rpm]	M2 [Nm]	fs	i	Riduttore	Motore	Fr2 D-S-P [N]	Fr2 C [N]
372.9	26	2.6	7.62	BA42	80B2	-	1433
300.2	32	3.7	9.46	BA52	80B2	-	1651
267.3	36	1.9	10.62	BA42	80B2	-	1601
245.4	39	3.1	11.57	BA52	80B2	-	1765
219.3	44	1.5	12.95	BA42	80B2	-	1710
196.4	49	1.4	14.46	BA42	80B2	-	1775
194.2	50	2.4	14.63	BA52	80B2	-	1909
185.1	54	1.7	7.62	BA42	80D4	-	1810
178.2	56	2.9	7.91	BA52	80D4	-	1964
176.9	56	2.8	7.91	BA52	90S4	-	1969
172.4	56	1.6	16.47	BA42	80B2	-	1853
166.0	58	2.6	17.11	BA52	80B2	-	2011
149.0	67	2.4	9.46	BA52	80D4	-	2085
148.0	67	2.4	9.46	BA52	90S4	-	2090
138.3	70	2.2	20.46	BA52	80B2	-	2137
132.7	75	1.2	10.62	BA42	80D4	-	2022
123.6	78	1.2	22.97	BA42	80B2	-	2071
121.8	82	2.0	11.57	BA52	80D4	-	2229
121.0	83	1.9	11.57	BA52	90S4	-	2235
117.5	86	2.0	7.91	BA52	90L6	-	2256
113.5	85	1.8	25.03	BA52	80B2	-	2283
112.5	89	3.9	12.44	BA72	90S4	5800	2900
108.9	92	1.0	12.95	BA42	80D4	-	2160
103.5	93	3.4	27.45	BA72	80B2	5964	2982
98.3	103	1.6	9.46	BA52	90L6	-	2395
96.4	104	1.5	14.63	BA52	80D4	-	2410
95.7	104	1.5	14.63	BA52	90S4	-	2416
94.4	107	3.4	10.06	BA72	100LR6	6148	3074
93.9	106	4.0	14.91	BA72	90S4	6160	3080
92.4	109	3.4	10.06	BA72	90L6	6192	3096
89.5	108	1.4	31.63	BA52	80B2	-	2471
86.0	112	2.8	33.04	BA72	80B2	6344	3172
85.6	117	1.0	16.47	BA42	80D4	-	2341
82.4	121	1.7	17.11	BA52	80D4	-	2540
81.8	122	1.6	17.11	BA52	90S4	-	2546
80.9	119	1.3	35.10	BA52	80B2	-	2555
80.4	125	1.3	11.57	BA52	90L6	-	2561
78.0	128	3.3	17.94	BA72	90S4	6552	3276
76.3	132	2.8	12.44	BA72	100LR6	6600	3300
74.7	135	2.7	12.44	BA72	90L6	6647	3323
73.6	124	3.6	38.58	B063	80B2	11847	3385
69.5	139	2.2	40.87	BA72	80B2	6810	3405
68.9	145	1.4	20.46	BA52	80D4	-	2696
68.4	146	1.4	20.46	BA52	90S4	-	2702
67.4	143	1.1	41.97	BA52	80B2	-	2715

5.1 B/BA MOTORIDUTTORE (50Hz)

1.10 kW

n2 [rpm]	M2 [Nm]	fs	i	Riduttore	Motore	Fr2 D-S-P [N]	Fr2 C [N]
65.7	139	3.2	43.22	B063	80B2	12000	3501
64.7	141	2.4	43.89	BA73	80B2	6974	3487
63.7	158	2.8	14.91	BA72	100LR6	7009	3505
63.6	159	1.1	14.63	BA52	90L6	-	2769
63.1	158	2.7	22.19	BA72	90S4	7033	3517
63.0	150	4.0	22.39	B063	80D4	12000	3539
62.5	151	4.0	22.39	B063	90S4	12000	3546
62.4	162	2.7	14.91	BA72	90L6	7059	3530
62.2	155	1.7	45.64	BA72	80B2	7066	3533
61.3	156	4.0	15.18	B063	90L6	12000	3565
56.3	177	1.1	25.03	BA52	80D4	-	2883
55.9	171	3.7	17.00	B063	100LR6	12000	3662
55.9	178	1.1	25.03	BA52	90S4	-	2890
55.7	164	2.7	50.81	B063	80B2	12000	3675
55.3	165	3.9	51.19	B083	80B2	18000	5707
54.7	175	3.6	17.00	B063	90L6	12000	3685
54.4	185	1.1	17.11	BA52	90L6	-	2918
54.0	175	3.4	26.09	B063	80D4	12000	3700
53.8	170	2.0	52.83	BA73	80B2	7419	3709
53.7	176	3.4	26.09	B063	90S4	12000	3707
52.9	190	2.3	17.94	BA72	100LR6	7456	3728
51.8	194	2.3	17.94	BA72	90L6	7509	3755
51.5	187	1.4	54.94	BA72	80B2	7525	3762
51.4	194	2.2	27.45	BA72	80D4	7532	3766
51.0	179	3.6	55.52	B083	80B2	18000	5852
51.0	196	2.1	27.45	BA72	90S4	7550	3775
50.3	188	3.2	28.03	B063	80D4	12000	3777
49.9	189	3.2	28.03	B063	90S4	12000	3785
49.7	184	2.5	56.93	B063	80B2	12000	3798
47.4	193	3.3	59.96	B083	80B2	18000	5984
45.5	222	0.9	20.46	BA52	90L6	-	3097
45.2	221	0.9	31.63	BA52	90S4	-	3102
44.6	205	3.1	63.74	B083	80B2	18000	6097
44.3	213	4.0	31.80	B083	80D4	18000	6097
44.0	215	4.0	31.80	B083	90S4	18000	6110
43.3	211	1.6	65.35	BA73	80B2	7973	3986
42.8	235	1.9	22.19	BA72	100LR6	8004	4002
42.7	234	1.8	33.04	BA72	80D4	8012	4006
42.4	225	2.8	22.39	B063	100LR6	12000	3961
42.4	236	1.8	33.04	BA72	90S4	8031	4016
42.2	224	2.7	33.43	B063	80D4	12000	3971
41.9	226	2.7	33.43	B063	90S4	12000	3979
41.9	241	1.8	22.19	BA72	90L6	8061	4030
41.6	229	3.9	22.82	B083	100LR6	18000	6212
41.6	231	1.1	67.96	BA72	80B2	8078	4039

5.1 B/BA MOTORIDUTTORE (50Hz)

1.10 kW

n2 [rpm]	M2 [Nm]	fs	i	Riduttore	Motore	Fr2 D-S-P [N]	Fr2 C [N]
41.5	230	2.7	22.39	B063	90L6	12000	3985
40.9	223	2.0	69.16	B063	80B2	12000	4015
40.9	231	3.7	34.49	B083	80D4	18000	6249
40.9	223	2.9	69.14	B083	80B2	18000	6256
40.8	234	3.8	22.82	B083	90L6	18000	6252
40.6	233	3.6	34.49	B083	90S4	18000	6262
38.7	236	2.7	73.14	B083	80B2	18000	6363
36.6	259	2.3	38.58	B063	80D4	12000	4132
36.5	250	1.8	77.48	B063	80B2	12000	4145
36.4	262	2.4	26.09	B063	100LR6	12000	4133
36.3	261	2.3	38.58	B063	90S4	12000	4141
35.6	268	2.4	26.09	B063	90L6	12000	4158
35.6	266	3.2	39.60	B083	80D4	18000	6513
35.6	269	3.3	26.71	B083	100LR6	18000	6512
35.4	267	3.2	39.60	B083	90S4	18000	6527
35.0	260	2.4	80.76	B083	80B2	18000	6555
35.0	261	1.3	80.83	BA73	80B2	8558	4279
34.8	274	3.3	26.71	B083	90L6	18000	6554
34.6	291	1.5	27.45	BA72	100LR6	8592	4296
34.5	289	1.4	40.87	BA72	80D4	8601	4300
34.3	291	1.4	40.87	BA72	90S4	8621	4311
33.9	282	2.2	28.03	B063	100LR6	12000	4215
33.9	298	1.5	27.45	BA72	90L6	8653	4326
33.2	288	2.2	28.03	B063	90L6	12000	4240
32.8	288	3.0	42.95	B083	80D4	18000	6673
32.6	290	2.1	43.22	B063	80D4	12000	4263
32.6	290	2.9	42.95	B083	90S4	18000	6687
32.4	292	2.1	43.22	B063	90S4	12000	4271
32.2	296	3.0	29.50	B083	100LR6	18000	6707
32.1	294	1.5	43.89	BA73	80D4	8808	4404
31.9	296	1.5	43.89	BA73	90S4	8828	4414
31.5	303	2.9	29.50	B083	90L6	18000	6749
31.3	291	1.5	90.33	B063	80B2	12000	4323
31.0	305	2.8	45.44	B083	80D4	18000	6784
30.9	323	1.1	45.64	BA72	80D4	8923	4462
30.8	307	2.8	45.44	B083	90S4	18000	6799
30.7	297	2.1	92.19	B083	80B2	18000	6819
30.7	325	1.1	45.64	BA72	90S4	8944	4472
29.9	320	2.8	31.80	B083	100LR6	18000	6857
29.2	326	2.7	31.80	B083	90L6	18000	6900
29.1	314	1.1	97.29	BA73	80B2	9104	4552
28.8	351	1.3	33.04	BA72	100LR6	9139	4570
28.4	336	1.9	33.43	B063	100LR6	12000	4419
28.1	324	2.0	100.57	B083	80B2	18000	6996
28.1	358	1.2	33.04	BA72	90L6	9204	4602

5.1 B/BA MOTORIDUTTORE (50Hz)

1.10 kW

n2 [rpm]	M2 [Nm]	fs	i	Riduttore	Motore	Fr2 D-S-P [N]	Fr2 C [N]
28.0	326	1.4	101.20	B063	80B2	12000	4458
27.8	343	1.8	33.43	B063	90L6	12000	4444
27.8	341	1.8	50.81	B063	80D4	12000	4452
27.6	343	1.7	50.81	B063	90S4	12000	4460
27.5	347	2.6	34.49	B083	100LR6	18000	7022
27.5	343	2.5	51.19	B083	80D4	18000	7026
27.4	346	2.5	51.19	B083	90S4	18000	7041
27.0	354	2.5	34.49	B083	90L6	18000	7066
26.9	339	1.9	105.29	B083	80B2	18000	7091
26.8	340	4.0	105.44	B103	80B2	22000	8781
26.7	354	1.3	52.83	BA73	80D4	9369	4685
26.5	357	1.3	52.83	BA73	90S4	9391	4696
26.0	383	0.9	54.94	BA72	90S4	9448	4724
25.7	389	0.9	54.94	BA72	80D4	9492	4746
25.4	372	2.3	55.52	B083	80D4	18000	7194
25.3	360	1.2	111.74	B063	80B2	12000	4576
25.2	375	2.3	55.52	B083	90S4	18000	7209
24.8	382	1.6	56.93	B063	80D4	12000	4586
24.7	370	3.6	114.80	B103	80B2	22000	9013
24.6	388	1.6	38.58	B063	100LR6	12000	4588
24.6	384	1.6	56.93	B063	90S4	12000	4594
24.3	375	1.7	116.25	B083	80B2	18000	7299
24.1	396	1.6	38.58	B063	90L6	12000	4613
24.0	398	2.2	39.60	B083	100LR6	18000	7309
23.5	407	2.2	39.60	B083	90L6	18000	7354
23.5	402	2.1	59.96	B083	80D4	18000	7356
23.5	388	3.5	120.42	B103	80B2	22000	9147
23.4	405	2.1	59.96	B083	90S4	18000	7371
23.2	434	1.0	40.87	BA72	100LR6	9811	4905
22.8	400	1.1	124.20	B063	80B2	12000	4703
22.8	443	0.9	40.87	BA72	90L6	9880	4940
22.3	409	1.6	126.76	B083	80B2	18000	7483
22.1	432	2.1	42.95	B083	100LR6	18000	7481
22.1	427	2.0	63.74	B083	80D4	18000	7486
22.0	434	1.5	43.22	B063	100LR6	12000	4722
22.0	430	2.0	63.74	B083	90S4	18000	7501
21.7	441	2.0	42.95	B083	90L6	18000	7527
21.7	435	3.9	64.89	B103	80D4	22000	9356
21.6	438	3.9	64.89	B103	90S4	22000	9376
21.6	438	1.0	65.35	BA73	80D4	10000	5029
21.5	444	1.4	43.22	B063	90L6	12000	4747
21.4	441	1.0	65.35	BA73	90S4	10000	5041
21.3	448	4.0	44.61	B103	100LR6	22000	9410
21.3	428	3.2	132.87	B103	80B2	22000	9426
21.2	451	1.0	43.89	BA73	90L6	10000	5059

5.1 B/BA MOTORIDUTTORE (50Hz)

1.10 kW

n2 [rpm]	M2 [Nm]	fs	i	Riduttore	Motore	Fr2 D-S-P [N]	Fr2 C [N]
20.9	457	2.0	45.44	B083	100LR6	18000	7602
20.8	458	3.9	44.61	B103	90L6	22000	9471
20.6	460	3.7	68.58	B103	80D4	22000	9515
20.5	467	1.9	45.44	B083	90L6	18000	7648
20.4	464	1.3	69.16	B063	80D4	12000	4817
20.4	464	1.8	69.14	B083	80D4	18000	7661
20.4	463	3.7	68.58	B103	90S4	22000	9535
20.3	449	1.0	139.15	B063	80B2	12000	4841
20.2	467	1.3	69.16	B063	90S4	12000	4825
20.2	467	1.8	69.14	B083	90S4	18000	7677
20.1	475	3.8	47.28	B103	100LR6	22000	9578
19.7	486	3.7	47.28	B103	90L6	22000	9640
19.6	466	2.9	144.69	B103	80B2	22000	9674
19.5	467	1.4	144.77	B083	80B2	18000	7773
19.4	488	3.5	72.76	B103	80D4	22000	9687
19.3	490	1.7	73.14	B083	80D4	18000	7784
19.2	491	3.5	72.76	B103	90S4	22000	9708
19.1	494	1.7	73.14	B083	90S4	18000	7799
18.9	505	3.5	50.24	B103	100LR6	22000	9755
18.7	511	1.2	50.81	B063	100LR6	12000	4913
18.6	515	1.7	51.19	B083	100LR6	18000	7861
18.5	516	3.5	50.24	B103	90L6	22000	9818
18.3	522	1.2	50.81	B063	90L6	12000	4938
18.2	520	1.2	77.48	B063	80D4	12000	4952
18.2	526	1.7	51.19	B083	90L6	18000	7908
18.1	523	1.1	77.48	B063	90S4	12000	4960
17.9	533	3.3	53.02	B103	100LR6	22000	9914
17.9	529	3.2	78.92	B103	80D4	22000	9927
17.7	533	3.2	78.92	B103	90S4	22000	9949
17.5	542	1.6	80.76	B083	80D4	18000	8002
17.5	544	3.3	53.02	B103	90L6	22000	9978
17.3	545	1.6	80.76	B083	90S4	18000	8018
17.1	558	1.6	55.52	B083	100LR6	18000	8041
17.1	533	2.5	165.25	B103	80B2	22000	10070
16.9	561	3.2	83.66	B103	80D4	22000	10102
16.7	572	1.1	56.93	B063	100LR6	12000	5047
16.7	570	1.6	55.52	B083	90L6	18000	8088
16.7	565	3.2	83.66	B103	90S4	22000	10124
16.3	584	1.1	56.93	B063	90L6	12000	5072
16.2	588	3.0	58.50	B103	100LR6	22000	10211
15.9	601	3.0	58.50	B103	90L6	22000	10276
15.8	603	1.5	59.96	B083	100LR6	18000	8212
15.6	606	1.0	90.33	B063	80D4	12000	5133
15.5	616	1.4	59.96	B083	90L6	18000	8260
15.3	618	1.4	92.19	B083	80D4	18000	8299

5.1 B/BA MOTORIDUTTORE (50Hz)

1.10 kW

n2 [rpm]	M2 [Nm]	fs	i	Riduttore	Motore	Fr2 D-S-P [N]	Fr2 C [N]
15.3	619	2.9	92.31	B103	80D4	22000	10403
15.2	623	1.4	92.19	B083	90S4	18000	8315
15.2	623	2.9	92.31	B103	90S4	22000	10425
14.9	641	1.4	63.74	B083	100LR6	18000	8350
14.6	654	1.4	63.74	B083	90L6	18000	8398
14.6	652	2.7	64.89	B103	100LR6	22000	10530
14.3	666	2.7	64.89	B103	90L6	22000	10596
14.0	674	1.3	100.57	B083	80D4	18000	8497
13.9	679	1.3	100.57	B083	90S4	18000	8513
13.9	689	2.6	68.58	B103	100LR6	22000	10703
13.7	695	1.3	69.14	B083	100LR6	18000	8535
13.6	704	2.5	68.58	B103	90L6	22000	10770
13.5	710	1.3	69.14	B083	90L6	18000	8583
13.4	706	1.2	105.29	B083	80D4	18000	8601
13.4	707	2.5	105.44	B103	80D4	22000	10821
13.3	711	1.2	105.29	B083	90S4	18000	8618
13.3	712	2.5	105.44	B103	90S4	22000	10843
13.1	731	2.4	72.76	B103	100LR6	22000	10891
13.0	735	1.2	73.14	B083	100LR6	18000	8663
12.8	747	2.4	72.76	B103	90L6	22000	10959
12.7	751	1.2	73.14	B083	90L6	18000	8712
12.3	770	2.3	114.80	B103	80D4	22000	11094
12.2	775	2.3	114.80	B103	90S4	22000	11117
12.1	780	1.1	116.25	B083	80D4	18000	8829
12.0	785	1.1	116.25	B083	90S4	18000	8846
12.0	793	2.3	78.92	B103	100LR6	22000	11153
11.8	812	1.1	80.76	B083	100LR6	18000	8891
11.8	810	2.2	78.92	B103	90L6	22000	11222
11.7	807	2.2	120.42	B103	80D4	22000	11249
11.6	813	2.2	120.42	B103	90S4	22000	11272
11.5	829	1.1	80.76	B083	90L6	18000	8940
11.4	841	2.2	83.66	B103	100LR6	22000	11343
11.1	850	1.0	126.76	B083	80D4	18000	9030
11.1	859	2.2	83.66	B103	90L6	22000	11413
11.0	856	1.0	126.76	B083	90S4	18000	9046
10.8	878	4.0	129.96	B123	90S4	30000	16223
10.6	891	2.0	132.87	B103	80D4	22000	11574
10.5	897	2.0	132.87	B103	90S4	22000	11597
10.3	927	1.0	92.19	B083	100LR6	18000	9197
10.3	928	2.0	92.31	B103	100LR6	22000	11668
10.1	947	0.9	92.19	B083	90L6	18000	9246
10.1	948	2.0	92.31	B103	90L6	22000	11740
9.7	970	1.9	144.69	B103	80D4	22000	11860
9.7	977	1.8	144.69	B103	90S4	22000	11884
9.7	975	3.6	144.43	B123	90S4	30000	16711

5.1 B/BA MOTORIDUTTORE (50Hz)

1.10 kW

n2 [rpm]	M2 [Nm]	fs	i	Riduttore	Motore	Fr2 D-S-P [N]	Fr2 C [N]
9.5	1002	3.7	99.70	B123	100LR6	30000	16778
9.0	1060	1.8	105.44	B103	100LR6	22000	12118
8.9	1072	3.4	106.65	B123	100LR6	30000	17093
8.8	1083	1.7	105.44	B103	90L6	22000	12191
8.7	1095	3.4	106.65	B123	90L6	30000	17193
8.7	1082	3.2	160.23	B123	90S4	30000	17198
8.5	1108	1.6	165.25	B103	80D4	22000	12313
8.5	1116	1.6	165.25	B103	90S4	22000	12338
8.3	1154	1.6	114.80	B103	100LR6	22000	12410
8.1	1179	1.6	114.80	B103	90L6	22000	12484
7.9	1210	1.6	120.42	B103	100LR6	22000	12576
7.9	1202	3.1	119.60	B123	100LR6	30000	17635
7.8	1228	3.0	119.60	B123	90L6	30000	17736
7.8	1218	2.9	180.40	B123	90S4	30000	17762
7.7	1236	1.5	120.42	B103	90L6	22000	12650
7.3	1306	2.8	129.96	B123	100LR6	30000	18032
7.2	1334	2.8	129.96	B123	90L6	30000	18135
7.1	1336	1.4	132.87	B103	100LR6	22000	12921
7.0	1364	1.4	132.87	B103	90L6	22000	12996
7.0	1371	3.8	136.44	B143	100LR6	40000	40000
6.6	1454	1.3	144.69	B103	100LR6	22000	13223
6.6	1452	2.5	144.43	B123	100LR6	30000	18541
6.4	1486	1.3	144.69	B103	90L6	22000	13299
6.4	1483	2.5	144.43	B123	90L6	30000	18644
6.4	1504	3.5	149.59	B143	100LR6	40000	40000
5.9	1611	2.3	160.23	B123	100LR6	30000	19045
5.8	1645	2.2	160.23	B123	90L6	30000	19149
5.7	1661	1.1	165.25	B103	100LR6	22000	13700
5.7	1674	3.1	166.53	B143	100LR6	40000	40000
5.6	1697	1.1	165.25	B103	90L6	22000	13776
5.3	1813	2.0	180.40	B123	100LR6	30000	19624
5.2	1852	2.0	180.40	B123	90L6	30000	19728
5.1	1882	2.8	187.24	B143	100LR6	40000	40000

1.50 kW

n2 [rpm]	M2 [Nm]	fs	i	Riduttore	Motore	Fr2 D-S-P [N]	Fr2 C [N]
369.0	36	1.9	7.62	BA42	80C2	-	1438
358.9	37	3.3	7.91	BA52	90S2	-	1555
355.1	37	3.2	7.91	BA52	80C2	-	1561
300.2	44	2.7	9.46	BA52	90S2	-	1651
297.0	44	2.7	9.46	BA52	80C2	-	1657
264.5	50	1.4	10.62	BA42	80C2	-	1607
245.4	54	2.2	11.57	BA52	90S2	-	1765

5.1 B/BA MOTORIDUTTORE (50Hz)

1.50 kW

n2 [rpm]	M2 [Nm]	fs	i	Riduttore	Motore	Fr2 D-S-P [N]	Fr2 C [N]
242.8	54	2.2	11.57	BA52	80C2	-	1772
217.0	61	1.1	12.95	BA42	80C2	-	1716
194.2	68	1.8	14.63	BA52	90S2	-	1909
192.1	68	1.8	14.63	BA52	80C2	-	1915
179.5	76	2.1	7.91	BA52	90L4	-	1959
176.9	77	2.1	7.91	BA52	90LA4	-	1969
170.6	77	1.2	16.47	BA42	80C2	-	1860
167.1	79	1.9	17.11	BA52	90S2	-	2006
164.5	79	3.8	5.71	B063	100L6	9158	2617
164.2	80	1.9	17.11	BA52	80C2	-	2018
162.7	80	3.8	5.71	B063	100LA6	9188	2625
158.3	83	3.8	17.94	BA72	90S2	5176	2588
150.1	91	1.8	9.46	BA52	90L4	-	2080
148.0	92	1.7	9.46	BA52	90LA4	-	2090
141.2	96	3.6	10.06	BA72	90L4	5377	2689
139.2	98	3.6	10.06	BA72	90LA4	5403	2701
138.8	95	1.6	20.46	BA52	90S2	-	2135
137.3	96	1.6	20.46	BA52	80C2	-	2142
136.6	95	3.7	6.88	B063	100L6	9686	2767
135.2	96	3.7	6.88	B063	100LA6	9717	2776
128.4	101	3.6	7.32	B063	100L6	9869	2820
128.0	103	3.1	22.19	BA72	90S2	5556	2778
127.0	103	3.6	7.32	B063	100LA6	9900	2829
122.7	111	1.4	11.57	BA52	90L4	-	2224
121.0	113	1.4	11.57	BA52	90LA4	-	2235
114.1	119	2.9	12.44	BA72	90L4	5772	2886
113.5	116	1.3	25.03	BA52	90S2	-	2283
112.5	122	3.0	8.36	BA72	100L6	5800	2900
112.5	121	2.9	12.44	BA72	90LA4	5800	2900
112.3	117	1.3	25.03	BA52	80C2	-	2291
111.3	124	3.0	8.36	BA72	100LA6	5821	2910
108.9	114	3.9	26.09	B063	90S2	10388	2968
107.7	116	3.9	26.09	B063	80C2	10421	2977
103.5	127	2.5	27.45	BA72	90S2	5964	2982
102.6	127	3.8	9.16	B063	100L6	10546	3013
102.4	128	2.5	27.45	BA72	80C2	5985	2993
101.5	128	3.8	9.16	B063	100LA6	10579	3023
101.3	123	3.7	28.03	B063	90S2	10611	3032
100.2	124	3.6	28.03	B063	80C2	10644	3041
97.1	140	1.1	14.63	BA52	90L4	-	2405
95.7	142	1.1	14.63	BA52	90LA4	-	2416
95.3	143	2.9	14.91	BA72	90L4	6131	3065
93.9	145	2.9	14.91	BA72	90LA4	6160	3080
93.4	147	2.5	10.06	BA72	100L6	6170	3085
92.4	149	2.5	10.06	BA72	100LA6	6192	3096

5.1 B/BA MOTORIDUTTORE (50Hz)

1.50 kW

n2 [rpm]	M2 [Nm]	fs	i	Riduttore	Motore	Fr2 D-S-P [N]	Fr2 C [N]
91.6	142	3.8	10.26	B063	100L6	10902	3115
90.6	144	3.8	10.26	B063	100LA6	10936	3124
89.8	146	1.0	31.63	BA52	90S2	-	2468
88.8	148	1.0	31.63	BA52	80C2	-	2477
86.0	153	2.1	33.04	BA72	90S2	6344	3172
85.2	153	3.7	11.03	B063	100L6	11131	3180
85.0	154	2.0	33.04	BA72	80C2	6367	3183
84.9	146	3.1	33.43	B063	90S2	11173	3192
84.3	154	3.7	11.03	B063	100LA6	11165	3190
84.1	148	3.0	33.43	B063	80C2	11207	3202
83.5	154	3.9	17.00	B063	90L4	11203	3201
83.0	164	1.2	17.11	BA52	90L4	-	2534
82.3	157	3.8	17.00	B063	90LA4	11249	3214
81.8	166	1.2	17.11	BA52	90LA4	-	2546
79.1	172	2.4	17.94	BA72	90L4	6521	3261
78.0	174	2.4	17.94	BA72	90LA4	6552	3276
76.1	171	3.6	12.35	B063	100L6	11499	3286
75.5	182	2.0	12.44	BA72	100L6	6623	3312
75.3	173	3.5	12.35	B063	100LA6	11534	3296
74.7	184	2.0	12.44	BA72	100LA6	6647	3323
73.6	169	2.7	38.58	B063	90S2	11643	3327
72.8	171	2.6	38.58	B063	80C2	11679	3337
71.7	173	3.7	39.60	B083	90S2	18000	5212
71.5	182	3.4	13.15	B063	100L6	11705	3344
71.0	175	3.6	39.60	B083	80C2	18000	5229
70.7	184	3.4	13.15	B063	100LA6	11741	3354
69.5	189	1.6	40.87	BA72	90S2	6810	3405
69.4	196	1.0	20.46	BA52	90L4	-	2689
68.8	191	1.6	40.87	BA72	80C2	6834	3417
68.4	199	1.0	20.46	BA52	90LA4	-	2702
66.1	188	3.4	42.95	B083	90S2	18000	5343
65.7	189	2.4	43.22	B063	90S2	12000	3436
65.4	190	3.4	42.95	B083	80C2	18000	5360
65.0	191	2.4	43.22	B063	80C2	12000	3446
64.7	192	1.8	43.89	BA73	90S2	6974	3487
64.0	213	2.0	22.19	BA72	90L4	7000	3500
64.0	194	1.7	43.89	BA73	80C2	6999	3499
63.4	203	3.0	22.39	B063	90L4	12000	3461
63.1	218	2.0	14.91	BA72	100L6	7034	3517
63.1	216	1.9	22.19	BA72	90LA4	7033	3517
62.5	206	2.9	22.39	B063	90LA4	12000	3475
62.5	199	3.2	45.44	B083	90S2	18000	5434
62.4	220	2.0	14.91	BA72	100LA6	7059	3530
62.2	211	1.2	45.64	BA72	90S2	7066	3533
61.9	210	2.9	15.18	B063	100L6	12000	3481

5.1 B/BA MOTORIDUTTORE (50Hz)

1.50 kW

n2 [rpm]	M2 [Nm]	fs	i	Riduttore	Motore	Fr2 D-S-P [N]	Fr2 C [N]
61.8	201	3.2	45.44	B083	80C2	18000	5452
61.6	213	1.2	45.64	BA72	80C2	7091	3545
61.3	212	2.9	15.18	B063	100LA6	12000	3492
56.6	230	3.9	16.60	B083	100L6	18000	5586
56.0	232	3.8	16.60	B083	100LA6	18000	5603
55.9	223	2.0	50.81	B063	90S2	12000	3595
55.5	224	2.8	51.19	B083	90S2	18000	5632
55.3	236	2.7	17.00	B063	100L6	12000	3592
55.3	225	2.0	50.81	B063	80C2	12000	3605
54.9	227	2.8	51.19	B083	80C2	18000	5650
54.7	238	2.6	17.00	B063	100LA6	12000	3603
54.4	237	2.5	26.09	B063	90L4	12000	3611
53.8	231	1.5	52.83	BA73	90S2	7419	3709
53.7	240	2.5	26.09	B063	90LA4	12000	3625
53.2	243	3.5	26.71	B083	90L4	18000	5695
53.2	234	1.4	52.83	BA73	80C2	7445	3723
52.4	246	3.5	26.71	B083	90LA4	18000	5719
52.4	262	1.7	17.94	BA72	100L6	7483	3741
51.8	265	1.7	17.94	BA72	100LA6	7509	3755
51.7	263	1.6	27.45	BA72	90L4	7514	3757
51.7	254	1.0	54.94	BA72	90S2	7516	3758
51.3	254	3.5	18.32	B083	100L6	18000	5752
51.1	243	2.6	55.52	B083	90S2	18000	5770
51.1	257	1.0	54.94	BA72	80C2	7543	3771
51.0	267	1.6	27.45	BA72	90LA4	7550	3775
50.8	257	3.5	18.32	B083	100LA6	18000	5771
50.7	255	2.4	28.03	B063	90L4	12000	3682
50.6	246	2.6	55.52	B083	80C2	18000	5789
49.9	258	2.3	28.03	B063	90LA4	12000	3696
49.9	249	1.8	56.93	B063	90S2	12000	3709
49.4	252	1.8	56.93	B063	80C2	12000	3719
48.1	268	3.2	29.50	B083	90L4	18000	5864
47.5	272	3.1	29.50	B083	90LA4	18000	5889
47.4	263	2.4	59.96	B083	90S2	18000	5903
46.9	265	2.4	59.96	B083	80C2	18000	5922
44.7	289	2.9	31.80	B083	90L4	18000	5995
44.6	279	2.3	63.74	B083	90S2	18000	6011
44.1	282	2.3	63.74	B083	80C2	18000	6030
44.0	293	2.9	31.80	B083	90LA4	18000	6020
43.5	286	1.2	65.35	BA73	90S2	7964	3982
43.0	317	1.3	33.04	BA72	90L4	7993	3997
43.0	289	1.2	65.35	BA73	80C2	7992	3996
42.5	304	2.0	33.43	B063	90L4	12000	3859
42.4	325	1.4	22.19	BA72	100L6	8032	4016
42.4	321	1.3	33.04	BA72	90LA4	8031	4016

5.1 B/BA MOTORIDUTTORE (50Hz)

1.50 kW

n2 [rpm]	M2 [Nm]	fs	i	Riduttore	Motore	Fr2 D-S-P [N]	Fr2 C [N]
42.0	310	2.0	22.39	B063	100L6	12000	3867
41.9	308	1.9	33.43	B063	90LA4	12000	3873
41.9	328	1.3	22.19	BA72	100LA6	8061	4030
41.5	314	2.0	22.39	B063	100LA6	12000	3877
41.2	316	2.8	22.82	B083	100L6	18000	6134
41.2	313	2.7	34.49	B083	90L4	18000	6139
41.1	303	1.5	69.16	B063	90S2	12000	3907
41.1	303	2.1	69.14	B083	90S2	18000	6156
40.8	319	2.8	22.82	B083	100LA6	18000	6153
40.6	306	1.5	69.16	B063	80C2	12000	3918
40.6	318	2.7	34.49	B083	90LA4	18000	6164
40.6	306	2.1	69.14	B083	80C2	18000	6175
38.8	320	2.0	73.14	B083	90S2	18000	6257
38.6	322	4.0	72.76	B103	80C2	22000	7770
38.4	324	2.0	73.14	B083	80C2	18000	6277
36.8	350	1.7	38.58	B063	90L4	12000	4004
36.7	339	1.3	77.48	B063	90S2	12000	4024
36.3	343	1.3	77.48	B063	80C2	12000	4035
36.3	355	1.7	38.58	B063	90LA4	12000	4018
36.0	361	1.7	26.09	B063	100L6	12000	4021
36.0	346	3.7	78.92	B103	90S2	22000	7940
35.9	360	2.4	39.60	B083	90L4	18000	6388
35.6	365	1.7	26.09	B063	100LA6	12000	4032
35.6	349	3.6	78.92	B103	80C2	22000	7966
35.4	365	2.3	39.60	B083	90LA4	18000	6414
35.2	354	1.8	80.76	B083	90S2	18000	6439
35.2	370	2.4	26.71	B083	100L6	18000	6419
34.8	374	2.4	26.71	B083	100LA6	18000	6439
34.8	358	1.8	80.76	B083	80C2	18000	6459
34.7	392	1.0	40.87	BA72	90L4	8580	4290
34.3	397	1.0	40.87	BA72	90LA4	8621	4311
34.2	401	1.1	27.45	BA72	100L6	8622	4311
33.9	366	3.7	83.66	B103	90S2	22000	8083
33.9	406	1.1	27.45	BA72	100LA6	8653	4326
33.6	370	3.6	83.66	B103	80C2	22000	8109
33.5	388	1.6	28.03	B063	100L6	12000	4094
33.2	392	1.6	28.03	B063	100LA6	12000	4105
33.1	390	2.2	42.95	B083	90L4	18000	6538
32.9	392	1.5	43.22	B063	90L4	12000	4120
32.6	396	2.1	42.95	B083	90LA4	18000	6565
32.4	398	1.5	43.22	B063	90LA4	12000	4134
32.4	398	1.1	43.89	BA73	90L4	8787	4393
31.9	409	2.2	29.50	B083	100L6	18000	6602
31.9	404	1.1	43.89	BA73	90LA4	8828	4414
31.5	413	2.2	29.50	B083	100LA6	18000	6622

5.1 B/BA MOTORIDUTTORE (50Hz)

1.50 kW

n2 [rpm]	M2 [Nm]	fs	i	Riduttore	Motore	Fr2 D-S-P [N]	Fr2 C [N]
31.3	413	2.1	45.44	B083	90L4	18000	6643
31.1	400	1.1	90.33	B063	80C2	12000	4194
30.8	418	2.0	45.44	B083	90LA4	18000	6670
30.8	404	1.6	92.19	B083	90S2	18000	6687
30.8	404	3.3	92.31	B103	90S2	22000	8328
30.8	423	4.0	30.55	B103	100L6	22000	8313
30.5	408	1.6	92.19	B083	80C2	18000	6707
30.4	428	3.9	30.55	B103	100LA6	22000	8340
30.4	409	3.3	92.31	B103	80C2	22000	8355
30.0	429	4.0	47.28	B103	90L4	22000	8377
29.6	440	2.0	31.80	B083	100L6	18000	6743
29.6	435	3.9	47.28	B103	90LA4	22000	8413
29.2	445	2.0	31.80	B083	100LA6	18000	6763
28.4	458	3.9	33.07	B103	100L6	22000	8513
28.4	483	0.9	33.04	BA72	100L6	9172	4586
28.3	456	3.7	50.24	B103	90L4	22000	8532
28.2	441	1.4	100.57	B083	90S2	18000	6853
28.1	463	1.4	33.43	B063	100L6	12000	4273
28.1	463	3.9	33.07	B103	100LA6	22000	8541
28.1	488	0.9	33.04	BA72	100LA6	9204	4602
27.9	461	1.3	50.81	B063	90L4	12000	4285
27.9	445	1.4	100.57	B083	80C2	18000	6873
27.9	463	3.7	50.24	B103	90LA4	22000	8568
27.8	448	1.0	101.20	B063	80C2	12000	4312
27.8	468	1.3	33.43	B063	100LA6	12000	4283
27.7	465	1.8	51.19	B083	90L4	18000	6868
27.6	468	1.3	50.81	B063	90LA4	12000	4299
27.4	471	1.8	51.19	B083	90LA4	18000	6895
27.3	478	1.9	34.49	B083	100L6	18000	6897
27.0	483	1.8	34.49	B083	100LA6	18000	6917
27.0	461	1.4	105.29	B083	90S2	18000	6941
26.9	462	2.9	105.44	B103	90S2	22000	8670
26.9	480	0.9	52.83	BA73	90L4	9347	4673
26.8	481	3.5	53.02	B103	90L4	22000	8671
26.7	466	1.4	105.29	B083	80C2	18000	6962
26.6	467	2.9	105.44	B103	80C2	22000	8697
26.5	487	0.9	52.83	BA73	90LA4	9391	4696
26.4	488	3.5	53.02	B103	90LA4	22000	8708
26.2	497	3.6	35.87	B103	100L6	22000	8723
25.9	502	3.6	35.87	B103	100LA6	22000	8751
25.6	504	1.7	55.52	B083	90L4	18000	7024
25.2	511	1.7	55.52	B083	90LA4	18000	7052
24.9	517	1.2	56.93	B063	90L4	12000	4400
24.7	503	2.7	114.80	B103	90S2	22000	8894
24.6	524	1.1	56.93	B063	90LA4	12000	4414

5.1 B/BA MOTORIDUTTORE (50Hz)

1.50 kW

n2 [rpm]	M2 [Nm]	fs	i	Riduttore	Motore	Fr2 D-S-P [N]	Fr2 C [N]
24.5	508	2.7	114.80	B103	80C2	22000	8922
24.4	534	1.2	38.58	B063	100L6	12000	4416
24.4	509	1.3	116.25	B083	90S2	18000	7134
24.3	531	3.2	58.50	B103	90L4	22000	8929
24.2	515	1.2	116.25	B083	80C2	18000	7155
24.1	540	1.2	38.58	B063	100LA6	12000	4427
23.9	539	3.2	58.50	B103	90LA4	22000	8967
23.7	549	1.6	39.60	B083	100L6	18000	7162
23.7	544	1.6	59.96	B083	90L4	18000	7173
23.6	528	2.6	120.42	B103	90S2	22000	9021
23.5	554	1.6	39.60	B083	100LA6	18000	7183
23.4	552	1.5	59.96	B083	90LA4	18000	7201
23.3	533	2.5	120.42	B103	80C2	22000	9050
22.9	570	3.1	41.12	B103	100L6	22000	9085
22.6	576	3.1	41.12	B103	100LA6	22000	9114
22.4	555	1.1	126.76	B083	90S2	18000	7305
22.3	579	1.5	63.74	B083	90L4	18000	7293
22.2	561	1.1	126.76	B083	80C2	18000	7326
22.0	587	1.4	63.74	B083	90LA4	18000	7320
21.9	595	1.5	42.95	B083	100L6	18000	7321
21.9	589	2.9	64.89	B103	90L4	22000	9207
21.7	599	1.1	43.22	B063	100L6	12000	4528
21.7	601	1.5	42.95	B083	100LA6	18000	7342
21.6	598	2.8	64.89	B103	90LA4	22000	9245
21.5	605	1.0	43.22	B063	100LA6	12000	4539
21.4	582	2.3	132.87	B103	90S2	22000	9289
21.1	588	2.3	132.87	B103	80C2	22000	9318
21.1	618	2.9	44.61	B103	100L6	22000	9305
20.8	625	2.9	44.61	B103	100LA6	22000	9334
20.7	629	1.4	45.44	B083	100L6	18000	7431
20.7	623	2.7	68.58	B103	90L4	22000	9358
20.5	628	1.0	69.16	B063	90L4	12000	4592
20.5	636	1.4	45.44	B083	100LA6	18000	7452
20.5	628	1.4	69.14	B083	90L4	18000	7452
20.4	632	2.7	68.58	B103	90LA4	22000	9397
20.2	637	0.9	69.16	B063	90LA4	12000	4606
20.2	637	1.3	69.14	B083	90LA4	18000	7480
19.9	655	2.7	47.28	B103	100L6	22000	9465
19.7	662	2.7	47.28	B103	100LA6	22000	9495
19.6	634	1.0	144.77	B083	90S2	18000	7570
19.6	634	2.1	144.69	B103	90S2	22000	9525
19.5	661	2.6	72.76	B103	90L4	22000	9521
19.4	664	1.3	73.14	B083	90L4	18000	7564
19.4	641	2.1	144.69	B103	80C2	22000	9554
19.2	670	2.5	72.76	B103	90LA4	22000	9561

5.1 B/BA MOTORIDUTTORE (50Hz)

1.50 kW

n2 [rpm]	M2 [Nm]	fs	i	Riduttore	Motore	Fr2 D-S-P [N]	Fr2 C [N]
19.1	674	1.3	73.14	B083	90LA4	18000	7592
18.7	696	2.6	50.24	B103	100L6	22000	9634
18.5	703	2.5	50.24	B103	100LA6	22000	9663
18.4	709	1.3	51.19	B083	100L6	18000	7666
18.2	717	1.2	51.19	B083	100LA6	18000	7687
18.0	717	2.4	78.92	B103	90L4	22000	9749
17.7	734	2.4	53.02	B103	100L6	22000	9785
17.7	727	2.3	78.92	B103	90LA4	22000	9789
17.7	702	3.7	160.23	B123	90S2	30000	13821
17.6	733	1.2	80.76	B083	90L4	18000	7761
17.5	742	2.4	53.02	B103	100LA6	22000	9815
17.3	744	1.1	80.76	B083	90LA4	18000	7789
17.2	724	1.9	165.25	B103	90S2	22000	9901
17.0	732	1.8	165.25	B103	80C2	22000	9931
17.0	760	2.4	83.66	B103	90L4	22000	9915
16.9	769	1.2	55.52	B083	100L6	18000	7827
16.7	777	1.1	55.52	B083	100LA6	18000	7849
16.7	770	2.3	83.66	B103	90LA4	22000	9955
16.1	810	2.2	58.50	B103	100L6	22000	10065
15.9	819	2.2	58.50	B103	100LA6	22000	10096
15.7	831	1.1	59.96	B083	100L6	18000	7980
15.7	790	3.3	180.40	B123	90S2	30000	14293
15.5	839	1.1	59.96	B083	100LA6	18000	8001
15.4	837	1.0	92.19	B083	90L4	18000	8025
15.4	838	2.1	92.31	B103	90L4	22000	10198
15.2	849	1.0	92.19	B083	90LA4	18000	8053
15.2	850	2.1	92.31	B103	90LA4	22000	10239
15.0	867	4.0	62.59	B123	100L6	30000	14432
14.9	876	4.0	62.59	B123	100LA6	30000	14475
14.7	883	1.0	63.74	B083	100L6	18000	8102
14.6	892	1.0	63.74	B083	100LA6	18000	8123
14.5	899	2.0	64.89	B103	100L6	22000	10366
14.3	908	2.0	64.89	B103	100LA6	22000	10397
14.1	913	0.9	100.57	B083	90L4	18000	8199
13.9	926	0.9	100.57	B083	90LA4	18000	8227
13.7	950	1.9	68.58	B103	100L6	22000	10528
13.6	958	0.9	69.14	B083	100L6	18000	8264
13.6	960	1.9	68.58	B103	100LA6	22000	10560
13.5	968	0.9	69.14	B083	100LA6	18000	8285
13.5	957	1.9	105.44	B103	90L4	22000	10589
13.5	962	3.6	69.43	B123	100L6	30000	14851
13.4	972	3.6	69.43	B123	100LA6	30000	14894
13.3	971	1.9	105.44	B103	90LA4	22000	10631
13.3	968	3.6	106.65	B123	90L4	30000	14931
13.1	982	3.6	106.65	B123	90LA4	30000	14989

5.1 B/BA MOTORIDUTTORE (50Hz)

1.50 kW

n2 [rpm]	M2 [Nm]	fs	i	Riduttore	Motore	Fr2 D-S-P [N]	Fr2 C [N]
12.9	1008	1.8	72.76	B103	100L6	22000	10704
12.8	1019	1.8	72.76	B103	100LA6	22000	10736
12.6	1031	3.6	74.42	B123	100L6	30000	15133
12.5	1042	3.5	74.42	B123	100LA6	30000	15177
12.4	1042	1.7	114.80	B103	90L4	22000	10842
12.2	1057	1.7	114.80	B103	90LA4	22000	10885
11.9	1093	1.6	78.92	B103	100L6	22000	10947
11.9	1086	3.2	119.60	B123	90L4	30000	15401
11.8	1105	1.6	78.92	B103	100LA6	22000	10980
11.8	1093	1.6	120.42	B103	90L4	22000	10986
11.7	1109	3.3	80.04	B123	100L6	30000	15432
11.7	1101	3.2	119.60	B123	90LA4	30000	15460
11.6	1109	1.6	120.42	B103	90LA4	22000	11029
11.6	1121	3.3	80.04	B123	100LA6	30000	15476
11.2	1159	1.6	83.66	B103	100L6	22000	11123
11.1	1171	1.6	83.66	B103	100LA6	22000	11156
10.9	1180	3.0	129.96	B123	90L4	30000	15745
10.8	1197	2.9	129.96	B123	90LA4	30000	15804
10.7	1206	1.5	132.87	B103	90L4	22000	11286
10.5	1224	1.5	132.87	B103	90LA4	22000	11329
10.5	1245	3.0	89.87	B123	100L6	30000	15911
10.3	1258	2.9	89.87	B123	100LA6	30000	15955
10.2	1279	1.5	92.31	B103	100L6	22000	11424
10.1	1292	1.5	92.31	B103	100LA6	22000	11456
9.9	1318	4.0	94.13	B143	100LA6	40000	40000
9.8	1314	1.4	144.69	B103	90L4	22000	11548
9.8	1311	2.7	144.43	B123	90L4	30000	16186
9.7	1332	1.4	144.69	B103	90LA4	22000	11592
9.7	1330	2.6	144.43	B123	90LA4	30000	16245
9.4	1381	2.7	99.70	B123	100L6	30000	16343
9.3	1396	2.6	99.70	B123	100LA6	30000	16388
8.9	1461	1.3	105.44	B103	100L6	22000	11834
8.9	1455	2.4	160.23	B123	90L4	30000	16621
8.9	1466	3.6	105.83	B143	100L6	40000	40000
8.8	1476	1.3	105.44	B103	100LA6	22000	11867
8.8	1477	2.5	106.65	B123	100L6	30000	16626
8.8	1482	3.5	105.83	B143	100LA6	40000	40000
8.7	1493	2.5	106.65	B123	100LA6	30000	16670
8.7	1476	2.4	160.23	B123	90LA4	30000	16681
8.6	1500	1.2	165.25	B103	90L4	22000	11960
8.5	1522	1.2	165.25	B103	90LA4	22000	12005
8.4	1551	3.4	111.94	B143	100L6	40000	40000
8.3	1567	3.3	111.94	B143	100LA6	40000	40000
8.2	1590	1.2	114.80	B103	100L6	22000	12098
8.1	1607	1.2	114.80	B103	100LA6	22000	12132

5.1 B/BA MOTORIDUTTORE (50Hz)

1.50 kW

n2 [rpm]	M2 [Nm]	fs	i	Riduttore	Motore	Fr2 D-S-P [N]	Fr2 C [N]
7.9	1657	2.2	119.60	B123	100L6	30000	17105
7.9	1638	2.1	180.40	B123	90L4	30000	17121
7.8	1668	1.1	120.42	B103	100L6	22000	12247
7.8	1661	2.1	180.40	B123	90LA4	30000	17180
7.8	1675	2.2	119.60	B123	100LA6	30000	17150
7.7	1686	1.1	120.42	B103	100LA6	22000	12281
7.5	1726	3.0	124.62	B143	100L6	40000	40000
7.5	1745	3.0	124.62	B143	100LA6	40000	40000
7.2	1800	2.0	129.96	B123	100L6	30000	17453
7.2	1820	2.0	129.96	B123	100LA6	30000	17497
7.1	1841	1.0	132.87	B103	100L6	22000	12555
7.0	1860	1.0	132.87	B103	100LA6	22000	12589
6.9	1890	2.8	136.44	B143	100L6	40000	40000
6.8	1910	2.7	136.44	B143	100LA6	40000	40000
6.5	2004	0.9	144.69	B103	100L6	22000	12822
6.5	2001	1.8	144.43	B123	100L6	30000	17892
6.4	2026	0.9	144.69	B103	100LA6	22000	12855
6.4	2022	1.8	144.43	B123	100LA6	30000	17936
6.3	2072	2.5	149.59	B143	100L6	40000	40000
6.2	2094	2.5	149.59	B143	100LA6	40000	40000
5.9	2220	1.7	160.23	B123	100L6	30000	18320
5.8	2243	1.6	160.23	B123	100LA6	30000	18363
5.6	2307	2.3	166.53	B143	100L6	40000	40000
5.6	2332	2.3	166.53	B143	100LA6	40000	40000
5.2	2499	1.5	180.40	B123	100L6	30000	18800
5.2	2526	1.5	180.40	B123	100LA6	30000	18843
5.0	2594	2.0	187.24	B143	100L6	40000	40000
5.0	2622	2.0	187.24	B143	100LA6	40000	40000

1.85 kW

n2 [rpm]	M2 [Nm]	fs	i	Riduttore	Motore	Fr2 D-S-P [N]	Fr2 C [N]
176.9	95	1.7	7.91	BA52	90LB4	-	1969
167.5	100	3.5	8.36	BA72	90LB4	5079	2540
162.7	99	3.1	5.71	B063	100LB6	9103	2601
148.0	113	1.4	9.46	BA52	90LB4	-	2090
139.2	121	2.9	10.06	BA72	90LB4	5403	2701
135.2	119	3.0	6.88	B063	100LB6	9615	2747
127.0	126	2.9	7.32	B063	100LB6	9792	2798
121.0	139	1.2	11.57	BA52	90LB4	-	2235
119.1	135	3.9	7.81	B083	100LB6	15480	4423
112.5	149	2.3	12.44	BA72	90LB4	5800	2900
111.3	152	2.4	8.36	BA72	100LB6	5821	2910
106.5	149	3.9	13.15	B063	90LB4	10310	2946

5.1 B/BA MOTORIDUTTORE (50Hz)

1.85 kW

n2 [rpm]	M2 [Nm]	fs	i	Riduttore	Motore	Fr2 D-S-P [N]	Fr2 C [N]
101.5	158	3.1	9.16	B063	100LB6	10444	2984
95.7	175	0.9	14.63	BA52	90LB4	-	2416
93.9	179	2.4	14.91	BA72	90LB4	6160	3080
92.4	183	2.0	10.06	BA72	100LB6	6192	3096
92.3	172	3.4	15.18	B063	90LB4	10738	3068
90.6	177	3.1	10.26	B063	100LB6	10784	3081
88.6	181	3.8	10.49	B083	100LB6	16934	4838
84.3	190	3.0	11.03	B063	100LB6	11002	3144
82.3	193	3.1	17.00	B063	90LB4	11084	3167
81.8	205	1.0	17.11	BA52	90LB4	-	2546
80.3	200	3.9	11.59	B083	100LB6	17445	4984
78.0	215	2.0	17.94	BA72	90LB4	6552	3276
75.3	213	2.9	12.35	B063	100LB6	11352	3244
74.7	227	1.6	12.44	BA72	100LB6	6647	3323
70.7	227	2.7	13.15	B063	100LB6	11547	3299
64.5	249	3.4	14.43	B083	100LB6	18000	5319
63.1	266	1.6	22.19	BA72	90LB4	7033	3517
62.5	254	2.4	22.39	B063	90LB4	11945	3413
62.4	272	1.6	14.91	BA72	100LB6	7059	3530
61.4	259	3.3	22.82	B083	90LB4	18000	5399
61.3	262	2.4	15.18	B063	100LB6	11997	3428
56.0	287	3.1	16.60	B083	100LB6	18000	5541
54.7	294	2.1	17.00	B063	100LB6	12000	3531
53.7	296	2.0	26.09	B063	90LB4	12000	3552
52.4	303	2.8	26.71	B083	90LB4	18000	5653
51.8	327	1.3	17.94	BA72	100LB6	7509	3755
51.0	329	1.3	27.45	BA72	90LB4	7550	3775
50.8	316	2.8	18.32	B083	100LB6	18000	5701
49.9	318	1.9	28.03	B063	90LB4	12000	3618
47.5	335	2.5	29.50	B083	90LB4	18000	5816
44.0	361	2.4	31.80	B083	90LB4	18000	5941
42.4	396	1.1	33.04	BA72	90LB4	8031	4016
41.9	380	1.6	33.43	B063	90LB4	12000	3780
41.9	405	1.1	22.19	BA72	100LB6	8061	4030
41.5	387	1.6	22.39	B063	100LB6	12000	3783
40.8	394	2.3	22.82	B083	100LB6	18000	6067
40.6	392	2.2	34.49	B083	90LB4	18000	6079
39.2	409	3.6	23.70	B103	100LB6	22000	7656
36.3	438	1.4	38.58	B063	90LB4	12000	3911
35.6	451	1.4	26.09	B063	100LB6	12000	3922
35.4	450	1.9	39.60	B083	90LB4	18000	6316
35.1	458	3.4	26.51	B103	100LB6	22000	7918
34.8	461	1.9	26.71	B083	100LB6	18000	6338
34.0	467	3.6	41.12	B103	90LB4	22000	7992
33.2	484	1.3	28.03	B063	100LB6	12000	3987

5.1 B/BA MOTORIDUTTORE (50Hz)

1.85 kW

n2 [rpm]	M2 [Nm]	fs	i	Riduttore	Motore	Fr2 D-S-P [N]	Fr2 C [N]
32.6	488	1.7	42.95	B083	90LB4	18000	6458
32.4	491	1.2	43.22	B063	90LB4	12000	4015
31.9	498	0.9	43.89	BA73	90LB4	8828	4414
31.5	509	1.8	29.50	B083	100LB6	18000	6511
31.4	507	3.4	44.61	B103	90LB4	22000	8188
30.8	516	1.6	45.44	B083	90LB4	18000	6557
30.4	528	3.2	30.55	B103	100LB6	22000	8258
29.6	537	3.2	47.28	B103	90LB4	22000	8330
29.2	549	1.6	31.80	B083	100LB6	18000	6643
28.1	571	3.1	33.07	B103	100LB6	22000	8452
27.9	571	3.0	50.24	B103	90LB4	22000	8479
27.8	577	1.1	33.43	B063	100LB6	12000	4143
27.6	577	1.0	50.81	B063	90LB4	12000	4158
27.4	581	1.5	51.19	B083	90LB4	18000	6768
27.0	596	1.5	34.49	B083	100LB6	18000	6787
26.4	602	2.8	53.02	B103	90LB4	22000	8614
25.9	619	2.9	35.87	B103	100LB6	22000	8655
25.2	631	1.3	55.52	B083	90LB4	18000	6914
24.6	647	0.9	56.93	B063	90LB4	12000	4256
24.1	666	0.9	38.58	B063	100LB6	12000	4264
23.9	664	2.6	58.50	B103	90LB4	22000	8863
23.5	684	1.3	39.60	B083	100LB6	18000	7033
23.4	681	1.2	59.96	B083	90LB4	18000	7052
22.6	710	2.5	41.12	B103	100LB6	22000	9003
22.0	724	1.2	63.74	B083	90LB4	18000	7162
21.7	742	1.2	42.95	B083	100LB6	18000	7179
21.6	737	2.3	64.89	B103	90LB4	22000	9131
20.8	770	2.3	44.61	B103	100LB6	22000	9215
20.5	785	1.1	45.44	B083	100LB6	18000	7280
20.4	779	2.2	68.58	B103	90LB4	22000	9276
20.2	785	1.1	69.14	B083	90LB4	18000	7309
19.7	817	2.2	47.28	B103	100LB6	22000	9368
19.2	826	2.1	72.76	B103	90LB4	22000	9432
19.1	831	1.0	73.14	B083	90LB4	18000	7410
18.7	860	3.9	49.80	B123	100LB6	30000	13362
18.5	868	2.1	50.24	B103	100LB6	22000	9529
18.2	884	1.0	51.19	B083	100LB6	18000	7494
17.7	896	1.9	78.92	B103	90LB4	22000	9650
17.5	916	1.9	53.02	B103	100LB6	22000	9673
17.5	909	3.9	80.04	B123	90LB4	30000	13614
17.3	917	0.9	80.76	B083	90LB4	18000	7588
17.1	938	3.6	54.30	B123	100LB6	30000	13679
16.7	959	0.9	55.52	B083	100LB6	18000	7639
16.7	950	1.9	83.66	B103	90LB4	22000	9807
15.9	1010	1.8	58.50	B103	100LB6	22000	9939

5.1 B/BA MOTORIDUTTORE (50Hz)

1.85 kW

n2 [rpm]	M2 [Nm]	fs	i	Riduttore	Motore	Fr2 D-S-P [N]	Fr2 C [N]
15.7	1025	3.3	59.36	B123	100LB6	30000	14009
15.2	1048	1.7	92.31	B103	90LB4	22000	10076
14.9	1081	3.2	62.59	B123	100LB6	30000	14207
14.3	1120	1.6	64.89	B103	100LB6	22000	10223
13.6	1184	1.5	68.58	B103	100LB6	22000	10376
13.4	1199	2.9	69.43	B123	100LB6	30000	14596
13.3	1198	1.5	105.44	B103	90LB4	22000	10445
13.1	1211	2.9	106.65	B123	90LB4	30000	14688
12.8	1256	1.4	72.76	B103	100LB6	22000	10540
12.5	1285	2.9	74.42	B123	100LB6	30000	14857
12.2	1304	1.4	114.80	B103	90LB4	22000	10682
12.1	1332	3.9	77.12	B143	100LB6	40000	40000
11.8	1363	1.3	78.92	B103	100LB6	22000	10768
11.7	1358	2.6	119.60	B123	90LB4	30000	15122
11.6	1368	1.3	120.42	B103	90LB4	22000	10817
11.6	1382	2.7	80.04	B123	100LB6	30000	15132
11.1	1445	1.3	83.66	B103	100LB6	22000	10931
10.9	1477	3.6	85.54	B143	100LB6	40000	40000
10.8	1476	2.4	129.96	B123	90LB4	30000	15438
10.5	1509	1.2	132.87	B103	90LB4	22000	11095
10.3	1552	2.4	89.87	B123	100LB6	30000	15570
10.1	1594	1.2	92.31	B103	100LB6	22000	11209
9.9	1625	3.2	94.13	B143	100LB6	40000	40000
9.7	1643	1.1	144.69	B103	90LB4	22000	11336
9.7	1640	2.1	144.43	B123	90LB4	30000	15838
9.3	1722	2.1	99.70	B123	100LB6	30000	15960
8.8	1821	1.0	105.44	B103	100LB6	22000	11584
8.8	1828	2.9	105.83	B143	100LB6	40000	40000
8.7	1842	2.0	106.65	B123	100LB6	30000	16213
8.7	1820	1.9	160.23	B123	90LB4	30000	16229
8.5	1877	1.0	165.25	B103	90LB4	22000	11713
8.3	1933	2.7	111.94	B143	100LB6	40000	40000
8.1	1982	1.0	114.80	B103	100LB6	22000	11823
7.8	2049	1.7	180.40	B123	90LB4	30000	16671
7.8	2065	1.8	119.60	B123	100LB6	30000	16637
7.7	2080	0.9	120.42	B103	100LB6	22000	11958
7.5	2152	2.4	124.62	B143	100LB6	40000	40000
7.2	2244	1.6	129.96	B123	100LB6	30000	16940
6.8	2356	2.2	136.44	B143	100LB6	40000	40000
6.4	2494	1.5	144.43	B123	100LB6	30000	17317
6.2	2583	2.0	149.59	B143	100LB6	40000	40000
5.8	2767	1.3	160.23	B123	100LB6	30000	17676
5.6	2876	1.8	166.53	B143	100LB6	40000	40000
5.2	3115	1.2	180.40	B123	100LB6	30000	18069
5.0	3233	1.6	187.24	B143	100LB6	40000	40000

5.1 B/BA MOTORIDUTTORE (50Hz)

2.20 kW

n2 [rpm]	M2 [Nm]	fs	i	Riduttore	Motore	Fr2 D-S-P [N]	Fr2 C [N]
364.0	53	2.3	7.91	BA52	90L2	-	1548
302.3	64	1.9	9.46	BA52	90L2	-	1647
284.3	68	3.9	10.06	BA72	90L2	4258	2129
255.5	74	3.9	5.71	B063	112MR4	7894	2256
250.2	76	3.8	5.71	B063	100LA4	7944	2270
247.1	78	1.5	11.57	BA52	90L2	-	1761
229.9	84	3.1	12.44	BA72	90L2	4571	2285
212.2	89	3.8	6.88	B063	112MR4	8346	2384
206.4	92	3.7	6.88	B063	100LA4	8415	2404
199.4	95	3.7	7.32	B063	112MR4	8502	2429
196.9	98	1.2	14.63	BA52	90L2	-	1900
193.9	98	3.6	7.32	B063	100LA4	8572	2449
193.2	100	3.2	14.91	BA72	90L2	4843	2422
174.7	114	3.1	8.36	BA72	112MR4	5008	2504
171.1	117	3.0	8.36	BA72	100LA4	5043	2522
168.0	114	2.7	5.71	B063	112M6	8936	2553
167.1	115	1.3	17.11	BA52	90L2	-	2006
162.7	117	2.6	5.71	B063	112MA6	9019	2577
159.4	119	3.9	9.16	B063	112MR4	9079	2594
159.4	121	2.6	17.94	BA72	90L2	5164	2582
155.0	122	3.8	9.16	B063	100LA4	9153	2615
145.1	138	2.5	10.06	BA72	112MR4	5328	2664
142.3	133	3.9	10.26	B063	112MR4	9382	2681
141.2	141	2.5	10.06	BA72	100LA4	5377	2689
139.8	138	1.1	20.46	BA52	90L2	-	2130
139.5	137	2.6	6.88	B063	112M6	9428	2694
138.4	137	3.8	10.26	B063	100LA4	9457	2702
135.2	141	2.5	6.88	B063	112MA6	9514	2718
132.4	143	3.8	11.03	B063	112MR4	9577	2736
131.1	146	2.5	7.32	B063	112M6	9597	2742
128.9	149	2.1	22.19	BA72	90L2	5543	2772
128.8	147	3.7	11.03	B063	100LA4	9653	2758
127.7	143	3.1	22.39	B063	90L2	9699	2771
127.0	150	2.4	7.32	B063	112MA6	9684	2767
122.9	155	3.4	7.81	B083	112M6	15230	4352
119.1	160	3.3	7.81	B083	112MA6	15377	4393
118.2	160	3.6	12.35	B063	112MR4	9890	2826
117.3	170	2.1	12.44	BA72	112MR4	5719	2860
114.9	165	3.5	12.35	B063	100LA4	9967	2848
114.9	175	2.1	8.36	BA72	112M6	5760	2880
114.1	175	2.0	12.44	BA72	100LA4	5772	2886
111.3	172	3.7	8.62	B083	112M6	15692	4483
111.3	181	2.0	8.36	BA72	112MA6	5821	2910
111.0	170	3.5	13.15	B063	112MR4	10065	2876
109.6	166	2.7	26.09	B063	90L2	10127	2894

5.1 B/BA MOTORIDUTTORE (50Hz)

2.20 kW

n2 [rpm]	M2 [Nm]	fs	i	Riduttore	Motore	Fr2 D-S-P [N]	Fr2 C [N]
108.0	175	3.4	13.15	B063	100LA4	10143	2898
107.9	177	3.6	8.62	B083	112MA6	15842	4526
107.1	170	3.7	26.71	B083	90L2	15910	4546
104.8	182	2.7	9.16	B063	112M6	10219	2920
104.2	185	1.7	27.45	BA72	90L2	5950	2975
102.0	179	2.5	28.03	B063	90L2	10332	2952
101.5	188	2.6	9.16	B063	112MA6	10309	2945
97.9	204	2.1	14.91	BA72	112MR4	6074	3037
97.0	188	3.4	29.50	B083	90L2	16389	4683
96.2	197	3.0	15.18	B063	112MR4	10470	2992
95.4	211	1.7	10.06	BA72	112M6	6127	3063
95.3	210	2.0	14.91	BA72	100LA4	6131	3065
93.6	202	2.9	15.18	B063	100LA4	10550	3014
93.5	204	2.7	10.26	B063	112M6	10542	3012
92.4	218	1.7	10.06	BA72	112MA6	6192	3096
91.5	209	3.3	10.49	B083	112M6	16639	4754
90.6	211	2.6	10.26	B063	112MA6	10633	3038
89.9	203	3.1	31.80	B083	90L2	16760	4789
88.6	216	3.2	10.49	B083	112MA6	16795	4799
88.0	215	4.0	16.60	B083	112MR4	16840	4812
87.1	219	2.6	11.03	B063	112M6	10748	3071
86.6	223	1.4	33.04	BA72	90L2	6329	3165
85.9	220	2.7	17.00	B063	112MR4	10798	3085
85.6	221	3.8	16.60	B083	100LA4	16979	4851
85.5	213	2.1	33.43	B063	90L2	10844	3098
84.3	226	2.5	11.03	B063	112MA6	10840	3097
83.5	226	2.7	17.00	B063	100LA4	10878	3108
82.9	231	3.4	11.59	B083	112M6	17132	4895
82.9	220	2.9	34.49	B083	90L2	17169	4905
81.4	245	1.7	17.94	BA72	112MR4	6461	3231
80.3	238	3.3	11.59	B083	112MA6	17292	4941
79.7	237	3.6	18.32	B083	112MR4	17339	4954
79.1	252	1.7	17.94	BA72	100LA4	6521	3261
77.7	246	2.5	12.35	B063	112M6	11078	3165
77.5	244	3.5	18.32	B083	100LA4	17480	4994
77.2	261	1.4	12.44	BA72	112M6	6577	3288
75.3	254	2.4	12.35	B063	112MA6	11170	3191
74.7	270	1.4	12.44	BA72	112MA6	6647	3323
74.1	246	1.8	38.58	B063	90L2	11266	3219
73.0	262	2.4	13.15	B063	112M6	11260	3217
72.2	253	2.5	39.60	B083	90L2	17879	5108
70.7	270	2.3	13.15	B063	112MA6	11353	3244
70.0	275	1.1	40.87	BA72	90L2	6794	3397
66.6	274	2.3	42.95	B083	90L2	18000	5230
66.5	287	3.0	14.43	B083	112M6	18000	5217

5.1 B/BA MOTORIDUTTORE (50Hz)

2.20 kW

n2 [rpm]	M2 [Nm]	fs	i	Riduttore	Motore	Fr2 D-S-P [N]	Fr2 C [N]
66.2	276	1.6	43.22	B063	90L2	11606	3316
65.8	303	1.4	22.19	BA72	112MR4	6936	3468
65.2	290	2.1	22.39	B063	112MR4	11604	3316
65.2	280	1.2	43.89	BA73	90L2	6958	3479
64.5	296	2.9	14.43	B083	112MA6	18000	5265
64.4	313	1.4	14.91	BA72	112M6	6985	3493
64.0	296	2.9	22.82	B083	112MR4	18000	5279
64.0	312	1.3	22.19	BA72	100LA4	7000	3500
63.4	298	2.0	22.39	B063	100LA4	11686	3339
63.3	302	2.1	15.18	B063	112M6	11680	3337
62.9	290	2.2	45.44	B083	90L2	18000	5316
62.4	323	1.4	14.91	BA72	112MA6	7059	3530
62.2	304	2.8	22.82	B083	100LA4	18000	5321
61.3	312	2.0	15.18	B063	112MA6	11773	3364
57.8	330	2.7	16.60	B083	112M6	18000	5429
56.9	321	4.0	50.24	B103	90L2	22000	6806
56.5	338	1.9	17.00	B063	112M6	12000	3433
56.3	324	1.4	50.81	B063	90L2	12000	3455
56.0	338	1.8	26.09	B063	112MR4	12000	3445
56.0	341	2.6	16.60	B083	112MA6	18000	5478
55.9	327	2.0	51.19	B083	90L2	18000	5500
54.7	349	1.8	17.00	B063	112MA6	12000	3459
54.7	346	2.5	26.71	B083	112MR4	18000	5521
54.4	347	1.7	26.09	B063	100LA4	12000	3468
54.1	337	1.0	52.83	BA73	90L2	7401	3701
53.9	338	3.8	53.02	B103	90L2	22000	6918
53.5	377	1.2	17.94	BA72	112M6	7430	3715
53.2	356	2.4	26.71	B083	100LA4	18000	5564
53.2	375	1.1	27.45	BA72	112MR4	7445	3723
52.4	365	2.4	18.32	B083	112M6	18000	5583
52.1	363	1.7	28.03	B063	112MR4	12000	3505
51.8	389	1.1	17.94	BA72	112MA6	7509	3755
51.7	386	1.1	27.45	BA72	100LA4	7514	3757
51.5	354	1.8	55.52	B083	90L2	18000	5628
50.8	376	2.4	18.32	B083	112MA6	18000	5632
50.7	373	1.6	28.03	B063	100LA4	12000	3529
50.4	379	3.9	19.06	B103	112M6	22000	7048
50.2	363	1.2	56.93	B063	90L2	12000	3553
49.5	382	2.2	29.50	B083	112MR4	18000	5676
48.9	373	3.4	58.50	B103	90L2	22000	7127
48.8	391	3.8	19.06	B103	112MA6	22000	7116
48.1	393	2.2	29.50	B083	100LA4	18000	5720
47.7	383	1.7	59.96	B083	90L2	18000	5750
46.5	407	3.9	30.55	B103	100LA4	22000	7224
45.9	412	2.1	31.80	B083	112MR4	18000	5795

5.1 B/BA MOTORIDUTTORE (50Hz)

2.20 kW

n2 [rpm]	M2 [Nm]	fs	i	Riduttore	Motore	Fr2 D-S-P [N]	Fr2 C [N]
44.9	407	1.6	63.74	B083	90L2	18000	5849
44.7	423	2.0	31.80	B083	100LA4	18000	5839
44.2	428	4.0	33.07	B103	112MR4	22000	7336
44.2	452	0.9	33.04	BA72	112MR4	7920	3960
44.1	414	3.1	64.89	B103	90L2	22000	7352
43.7	433	1.4	33.43	B063	112MR4	12000	3653
43.3	466	0.9	22.19	BA72	112M6	7976	3988
43.0	464	0.9	33.04	BA72	100LA4	7993	3997
42.9	445	1.4	22.39	B063	112M6	12000	3663
42.9	440	3.9	33.07	B103	100LA4	22000	7396
42.5	445	1.3	33.43	B063	100LA4	12000	3676
42.3	447	1.9	34.49	B083	112MR4	18000	5925
42.1	454	2.0	22.82	B083	112M6	18000	5930
41.9	481	0.9	22.19	BA72	112MA6	8061	4030
41.7	438	2.9	68.58	B103	90L2	22000	7474
41.5	460	1.4	22.39	B063	112MA6	12000	3689
41.4	441	1.0	69.16	B063	90L2	12000	3719
41.4	441	1.4	69.14	B083	90L2	18000	5981
41.2	459	1.9	34.49	B083	100LA4	18000	5970
40.8	469	1.9	22.82	B083	112MA6	18000	5981
40.7	465	3.7	35.87	B103	112MR4	22000	7515
40.5	471	3.1	23.70	B103	112M6	22000	7522
39.6	478	3.6	35.87	B103	100LA4	22000	7577
39.3	464	2.7	72.76	B103	90L2	22000	7606
39.2	487	3.0	23.70	B103	112MA6	22000	7592
39.1	467	1.4	73.14	B083	90L2	18000	6073
37.8	500	1.2	38.58	B063	112MR4	12000	3771
36.9	513	1.7	39.60	B083	112MR4	18000	6149
36.8	519	1.2	26.09	B063	112M6	12000	3787
36.8	514	1.2	38.58	B063	100LA4	12000	3793
36.2	527	3.0	26.51	B103	112M6	22000	7774
36.2	504	2.5	78.92	B103	90L2	22000	7791
35.9	531	1.7	26.71	B083	112M6	18000	6185
35.9	527	1.6	39.60	B083	100LA4	18000	6195
35.6	536	1.2	26.09	B063	112MA6	12000	3812
35.5	533	3.2	41.12	B103	112MR4	22000	7823
35.4	515	1.2	80.76	B083	90L2	18000	6237
35.1	544	2.9	26.51	B103	112MA6	22000	7847
34.8	549	1.6	26.71	B083	112MA6	18000	6237
34.5	548	3.1	41.12	B103	100LA4	22000	7887
34.2	558	1.1	28.03	B063	112M6	12000	3844
34.2	534	2.5	83.66	B103	90L2	22000	7926
34.0	556	1.5	42.95	B083	112MR4	18000	6282
33.8	560	1.1	43.22	B063	112MR4	12000	3862
33.2	576	1.1	28.03	B063	112MA6	12000	3869

5.1 B/BA MOTORIDUTTORE (50Hz)

2.20 kW

n2 [rpm]	M2 [Nm]	fs	i	Riduttore	Motore	Fr2 D-S-P [N]	Fr2 C [N]
33.1	572	1.5	42.95	B083	100LA4	18000	6328
32.9	576	1.0	43.22	B063	100LA4	12000	3884
32.7	578	2.9	44.61	B103	112MR4	22000	8011
32.5	587	1.5	29.50	B083	112M6	18000	6347
32.1	588	1.4	45.44	B083	112MR4	18000	6375
31.8	594	2.9	44.61	B103	100LA4	22000	8076
31.5	606	1.5	29.50	B083	112MA6	18000	6399
31.4	608	2.8	30.55	B103	112M6	22000	8101
31.3	605	1.4	45.44	B083	100LA4	18000	6421
31.0	588	1.1	92.19	B083	90L2	18000	6457
31.0	589	2.3	92.31	B103	90L2	22000	8157
30.9	612	2.8	47.28	B103	112MR4	22000	8147
30.4	627	2.7	30.55	B103	112MA6	22000	8176
30.2	633	1.4	31.80	B083	112M6	18000	6470
30.0	630	2.7	47.28	B103	100LA4	22000	8213
29.2	653	1.4	31.80	B083	112MA6	18000	6523
29.1	651	2.6	50.24	B103	112MR4	22000	8291
29.0	658	2.7	33.07	B103	112M6	22000	8288
28.7	665	0.9	33.43	B063	112M6	12000	3978
28.7	658	0.9	50.81	B063	112MR4	12000	3986
28.6	637	1.0	100.57	B083	90L2	18000	6592
28.5	663	1.3	51.19	B083	112MR4	18000	6572
28.3	669	2.5	50.24	B103	100LA4	22000	8357
28.1	679	2.6	33.07	B103	112MA6	22000	8363
27.8	687	0.9	33.43	B063	112MA6	12000	4002
27.8	686	1.3	34.49	B083	112M6	18000	6604
27.7	682	1.2	51.19	B083	100LA4	18000	6618
27.5	687	2.5	53.02	B103	112MR4	22000	8419
27.1	673	2.0	105.44	B103	90L2	22000	8476
27.0	708	1.3	34.49	B083	112MA6	18000	6657
26.8	706	2.4	53.02	B103	100LA4	22000	8486
26.8	714	2.5	35.87	B103	112M6	22000	8482
26.8	680	3.9	106.65	B123	90L2	30000	11966
26.3	719	1.2	55.52	B083	112MR4	18000	6706
25.9	737	2.4	35.87	B103	112MA6	22000	8559
25.6	739	1.1	55.52	B083	100LA4	18000	6752
25.0	758	2.2	58.50	B103	112MR4	22000	8657
24.9	732	1.8	114.80	B103	90L2	22000	8683
24.4	777	1.1	59.96	B083	112MR4	18000	6833
24.3	779	2.2	58.50	B103	100LA4	22000	8725
24.2	788	1.1	39.60	B083	112M6	18000	6832
23.9	763	3.4	119.60	B123	90L2	30000	12353
23.7	798	1.1	59.96	B083	100LA4	18000	6879
23.7	768	1.8	120.42	B103	90L2	22000	8802
23.7	806	3.6	40.53	B123	112M6	30000	12339

5.1 B/BA MOTORIDUTTORE (50Hz)

2.20 kW

n2 [rpm]	M2 [Nm]	fs	i	Riduttore	Motore	Fr2 D-S-P [N]	Fr2 C [N]
23.5	813	1.1	39.60	B083	112MA6	18000	6884
23.3	818	2.2	41.12	B103	112M6	22000	8815
22.9	826	1.0	63.74	B083	112MR4	18000	6935
22.9	832	3.5	40.53	B123	112MA6	30000	12446
22.7	833	4.0	62.59	B123	100LA4	30000	12495
22.6	844	2.1	41.12	B103	112MA6	22000	8893
22.5	840	2.0	64.89	B103	112MR4	22000	8912
22.4	854	1.0	42.95	B083	112M6	18000	6965
22.3	849	1.0	63.74	B083	100LA4	18000	6980
22.0	829	3.2	129.96	B123	90L2	30000	12638
21.9	864	2.0	64.89	B103	100LA4	22000	8981
21.7	882	1.0	42.95	B083	112MA6	18000	7017
21.5	848	1.6	132.87	B103	90L2	22000	9048
21.5	887	2.0	44.61	B103	112M6	22000	9016
21.4	893	3.5	44.89	B123	112M6	30000	12684
21.3	888	1.9	68.58	B103	112MR4	22000	9050
21.1	904	1.0	45.44	B083	112M6	18000	7057
21.1	895	0.9	69.14	B083	112MR4	18000	7068
21.0	899	3.7	69.43	B123	112MR4	30000	12754
20.8	916	1.9	44.61	B103	112MA6	22000	9095
20.7	913	1.9	68.58	B103	100LA4	22000	9119
20.7	922	3.4	44.89	B123	112MA6	30000	12793
20.5	933	1.0	45.44	B083	112MA6	18000	7109
20.5	921	0.9	69.14	B083	100LA4	18000	7114
20.5	925	3.6	69.43	B123	100LA4	30000	12849
20.3	941	1.9	47.28	B103	112M6	22000	9161
20.1	942	1.8	72.76	B103	112MR4	22000	9198
19.8	923	1.5	144.69	B103	90L2	22000	9264
19.8	921	2.8	144.43	B123	90L2	30000	13003
19.7	971	1.8	47.28	B103	112MA6	22000	9241
19.6	964	3.6	74.42	B123	112MR4	30000	12991
19.5	969	1.8	72.76	B103	100LA4	22000	9268
19.3	991	3.4	49.80	B123	112M6	30000	13039
19.1	999	1.8	50.24	B103	112M6	22000	9314
19.1	991	3.5	74.42	B123	100LA4	30000	13087
18.7	1023	3.3	49.80	B123	112MA6	30000	13148
18.5	1032	1.7	50.24	B103	112MA6	22000	9394
18.5	1022	1.7	78.92	B103	112MR4	22000	9404
18.2	1037	3.4	80.04	B123	112MR4	30000	13242
18.1	1055	1.7	53.02	B103	112M6	22000	9450
18.0	1051	1.6	78.92	B103	100LA4	22000	9475
17.8	1022	2.6	160.23	B123	90L2	30000	13366
17.7	1080	3.1	54.30	B123	112M6	30000	13337
17.7	1066	3.3	80.04	B123	100LA4	30000	13339
17.5	1089	1.6	53.02	B103	112MA6	22000	9531

5.1 B/BA MOTORIDUTTORE (50Hz)

2.20 kW

n2 [rpm]	M2 [Nm]	fs	i	Riduttore	Motore	Fr2 D-S-P [N]	Fr2 C [N]
17.5	1083	1.7	83.66	B103	112MR4	22000	9552
17.3	1054	1.3	165.25	B103	90L2	22000	9605
17.1	1115	3.0	54.30	B123	112MA6	30000	13446
17.0	1114	1.6	83.66	B103	100LA4	22000	9623
16.4	1164	1.5	58.50	B103	112M6	22000	9701
16.2	1181	2.8	59.36	B123	112M6	30000	13644
16.2	1164	3.0	89.87	B123	112MR4	30000	13644
15.9	1201	1.5	58.50	B103	112MA6	22000	9782
15.9	1151	2.3	180.40	B123	90L2	30000	13784
15.8	1196	1.5	92.31	B103	112MR4	22000	9805
15.8	1197	2.9	89.87	B123	100LA4	30000	13741
15.7	1219	2.8	59.36	B123	112MA6	30000	13755
15.4	1229	1.5	92.31	B103	100LA4	22000	9877
15.3	1245	2.8	62.59	B123	112M6	30000	13828
15.1	1253	4.0	94.13	B143	100LA4	40000	40000
14.9	1285	2.7	62.59	B123	112MA6	30000	13938
14.8	1291	1.4	64.89	B103	112M6	22000	9967
14.6	1291	2.7	99.70	B123	112MR4	30000	14006
14.3	1332	1.3	64.89	B103	112MA6	22000	10049
14.3	1332	3.9	64.88	B143	112MA6	40000	40000
14.2	1328	2.6	99.70	B123	100LA4	30000	14103
14.0	1364	1.3	68.58	B103	112M6	22000	10110
13.8	1366	1.3	105.44	B103	112MR4	22000	10149
13.8	1381	2.5	69.43	B123	112M6	30000	14188
13.8	1371	3.6	105.83	B143	112MR4	40000	40000
13.7	1381	2.5	106.65	B123	112MR4	30000	14241
13.6	1408	1.3	68.58	B103	112MA6	22000	10192
13.6	1401	3.7	70.43	B143	112M6	40000	40000
13.5	1404	1.3	105.44	B103	100LA4	22000	10222
13.4	1426	2.4	69.43	B123	112MA6	30000	14298
13.4	1409	3.5	105.83	B143	100LA4	40000	40000
13.3	1420	2.5	106.65	B123	100LA4	30000	14338
13.2	1447	1.2	72.76	B103	112M6	22000	10263
13.2	1446	3.6	70.43	B143	112MA6	40000	40000
13.0	1450	3.4	111.94	B143	112MR4	40000	40000
12.9	1480	2.5	74.42	B123	112M6	30000	14428
12.8	1494	1.2	72.76	B103	112MA6	22000	10345
12.7	1487	1.2	114.80	B103	112MR4	22000	10370
12.7	1491	3.4	111.94	B143	100LA4	40000	40000
12.5	1528	2.4	74.42	B123	112MA6	30000	14538
12.4	1529	1.2	114.80	B103	100LA4	22000	10443
12.4	1534	3.4	77.12	B143	112M6	40000	40000
12.2	1570	1.1	78.92	B103	112M6	22000	10474
12.2	1549	2.3	119.60	B123	112MR4	30000	14639
12.1	1560	1.2	120.42	B103	112MR4	22000	10495

5.1 B/BA MOTORIDUTTORE (50Hz)

2.20 kW

n2 [rpm]	M2 [Nm]	fs	i	Riduttore	Motore	Fr2 D-S-P [N]	Fr2 C [N]
12.1	1584	3.3	77.12	B143	112MA6	40000	40000
12.0	1592	2.3	80.04	B123	112M6	30000	14680
11.9	1593	2.2	119.60	B123	100LA4	30000	14736
11.8	1621	1.1	78.92	B103	112MA6	22000	10556
11.8	1604	1.1	120.42	B103	100LA4	22000	10567
11.7	1614	3.1	124.62	B143	112MR4	40000	40000
11.6	1644	2.2	80.04	B123	112MA6	30000	14789
11.5	1664	1.1	83.66	B103	112M6	22000	10625
11.4	1659	3.0	124.62	B143	100LA4	40000	40000
11.2	1683	2.1	129.96	B123	112MR4	30000	14927
11.2	1702	3.1	85.54	B143	112M6	40000	40000
11.1	1718	1.1	83.66	B103	112MA6	22000	10707
11.0	1721	1.0	132.87	B103	112MR4	22000	10751
10.9	1731	2.0	129.96	B123	100LA4	30000	15022
10.9	1757	3.0	85.54	B143	112MA6	40000	40000
10.7	1769	1.0	132.87	B103	100LA4	22000	10823
10.7	1788	2.1	89.87	B123	112M6	30000	15076
10.7	1767	2.8	136.44	B143	112MR4	40000	40000
10.4	1836	1.0	92.31	B103	112M6	22000	10879
10.4	1817	2.8	136.44	B143	100LA4	40000	40000
10.3	1845	2.0	89.87	B123	112MA6	30000	15184
10.2	1873	2.8	94.13	B143	112M6	40000	40000
10.1	1896	1.0	92.31	B103	112MA6	22000	10961
10.1	1874	1.0	144.69	B103	112MR4	22000	10972
10.1	1871	1.9	144.43	B123	112MR4	30000	15288
9.9	1933	2.7	94.13	B143	112MA6	40000	40000
9.8	1927	0.9	144.69	B103	100LA4	22000	11044
9.8	1923	1.8	144.43	B123	100LA4	30000	15382
9.8	1937	2.6	149.59	B143	112MR4	40000	40000
9.6	1983	1.9	99.70	B123	112M6	30000	15427
9.5	1992	2.5	149.59	B143	100LA4	40000	40000
9.3	2047	1.8	99.70	B123	112MA6	30000	15533
9.1	2098	0.9	105.44	B103	112M6	22000	11220
9.1	2075	1.7	160.23	B123	112MR4	30000	15638
9.1	2105	2.5	105.83	B143	112M6	40000	40000
9.0	2122	1.7	106.65	B123	112M6	30000	15651
8.9	2134	1.6	160.23	B123	100LA4	30000	15730
8.8	2173	2.4	105.83	B143	112MA6	40000	40000
8.8	2157	2.3	166.53	B143	112MR4	40000	40000
8.7	2190	1.7	106.65	B123	112MA6	30000	15755
8.6	2227	2.4	111.94	B143	112M6	40000	40000
8.5	2218	2.3	166.53	B143	100LA4	40000	40000
8.3	2299	2.3	111.94	B143	112MA6	40000	40000
8.1	2336	1.5	180.40	B123	112MR4	30000	16027
8.0	2379	1.5	119.60	B123	112M6	30000	16023

5.1 B/BA MOTORIDUTTORE (50Hz)

2.20 kW

n2 [rpm]	M2 [Nm]	fs	i	Riduttore	Motore	Fr2 D-S-P [N]	Fr2 C [N]
7.9	2402	1.5	180.40	B123	100LA4	30000	16117
7.8	2456	1.5	119.60	B123	112MA6	30000	16124
7.8	2425	2.1	187.24	B143	112MR4	40000	40000
7.7	2479	2.1	124.62	B143	112M6	40000	40000
7.6	2493	2.0	187.24	B143	100LA4	40000	40000
7.5	2559	2.1	124.62	B143	112MA6	40000	40000
7.4	2585	1.4	129.96	B123	112M6	30000	16285
7.2	2669	1.4	129.96	B123	112MA6	30000	16382
7.0	2714	1.9	136.44	B143	112M6	40000	40000
6.8	2802	1.9	136.44	B143	112MA6	40000	40000
6.6	2873	1.3	144.43	B123	112M6	30000	16604
6.4	2966	1.2	144.43	B123	112MA6	30000	16697
6.4	2976	1.8	149.59	B143	112M6	40000	40000
6.2	3072	1.7	149.59	B143	112MA6	40000	40000
6.0	3188	1.2	160.23	B123	112M6	30000	16901
5.8	3290	1.1	160.23	B123	112MA6	30000	16989
5.8	3313	1.6	166.53	B143	112M6	40000	40000
5.6	3420	1.5	166.53	B143	112MA6	40000	40000
5.3	3589	1.0	180.40	B123	112M6	30000	17216
5.2	3705	1.0	180.40	B123	112MA6	30000	17295
5.1	3725	1.4	187.24	B143	112M6	40000	40000
5.0	3845	1.4	187.24	B143	112MA6	40000	40000

3.00 kW

n2 [rpm]	M2 [Nm]	fs	i	Riduttore	Motore	Fr2 D-S-P [N]	Fr2 C [N]
347.0	76	3.5	8.36	BA72	100L2	3984	1992
343.4	76	3.4	8.36	BA72	100LA2	3998	1999
288.3	91	2.9	10.06	BA72	100L2	4238	2119
285.3	92	2.9	10.06	BA72	100LA2	4253	2127
253.7	102	2.9	5.71	B063	112MS4	7788	2225
248.5	104	2.8	5.71	B063	100LB4	7836	2239
233.1	113	2.3	12.44	BA72	100L2	4550	2275
230.7	114	2.3	12.44	BA72	100LA2	4565	2283
220.5	113	3.9	13.15	B063	100L2	8129	2322
218.2	114	3.9	13.15	B063	100LA2	8153	2329
210.8	122	2.8	6.88	B063	112MS4	8215	2347
206.4	125	2.7	6.88	B063	100LB4	8264	2361
198.0	130	2.7	7.32	B063	112MS4	8362	2389
194.5	135	2.3	14.91	BA72	100L2	4832	2416
193.9	133	2.6	7.32	B063	100LB4	8412	2403
192.5	136	2.3	14.91	BA72	100LA2	4849	2424
191.1	130	3.4	15.18	B063	100L2	8468	2419
189.1	132	3.4	15.18	B063	100LA2	8493	2427

5.1 B/BA MOTORIDUTTORE (50Hz)

3.00 kW

n2 [rpm]	M2 [Nm]	fs	i	Riduttore	Motore	Fr2 D-S-P [N]	Fr2 C [N]
185.7	139	3.6	7.81	B083	112MS4	13279	3794
181.8	142	3.5	7.81	B083	100LB4	13363	3818
173.5	157	2.2	8.36	BA72	112MS4	5020	2510
170.6	146	3.1	17.00	B063	100L2	8743	2498
169.9	160	2.2	8.36	BA72	100LB4	5055	2528
168.8	147	3.1	17.00	B063	100LA2	8769	2505
168.2	153	3.9	8.62	B083	112MS4	13681	3909
164.7	157	3.8	8.62	B083	100LB4	13767	3933
162.7	160	1.9	5.71	B063	112MB6	8827	2522
161.6	163	1.9	17.94	BA72	100L2	5140	2570
160.0	164	1.9	17.94	BA72	100LA2	5158	2579
158.3	163	2.8	9.16	B063	112MS4	8901	2543
155.0	166	2.8	9.16	B063	100LB4	8953	2558
144.1	189	1.9	10.06	BA72	112MS4	5340	2670
141.3	183	2.8	10.26	B063	112MS4	9181	2623
141.2	193	1.8	10.06	BA72	100LB4	5377	2689
138.4	186	2.8	10.26	B063	100LB4	9233	2638
138.2	187	3.5	10.49	B083	112MS4	14504	4144
135.3	191	3.4	10.49	B083	100LB4	14593	4170
135.2	193	1.9	6.88	B063	112MB6	9282	2652
131.5	196	2.8	11.03	B063	112MS4	9360	2674
130.7	201	1.6	22.19	BA72	100L2	5518	2759
129.5	192	2.3	22.39	B063	100L2	9429	2694
129.3	203	1.6	22.19	BA72	100LA2	5537	2768
128.8	200	2.7	11.03	B063	100LB4	9412	2689
128.2	194	2.3	22.39	B063	100LA2	9455	2702
127.1	196	3.3	22.82	B083	100L2	14894	4255
127.0	205	1.8	7.32	B063	112MB6	9437	2696
125.8	198	3.2	22.82	B083	100LA2	14939	4268
125.1	206	3.6	11.59	B083	112MS4	14932	4266
124.2	210	2.5	7.81	B083	132S6	14957	4273
122.9	212	2.5	7.81	B083	132SA6	15002	4286
122.5	210	3.6	11.59	B083	100LB4	15024	4293
119.4	218	3.8	8.13	B103	132S6	18751	5357
119.1	219	2.4	7.81	B083	112MB6	15141	4326
118.1	220	3.8	8.13	B103	132SA6	18811	5375
117.4	220	2.6	12.35	B063	112MS4	9645	2756
116.5	234	1.5	12.44	BA72	112MS4	5732	2866
114.9	224	2.6	12.35	B063	100LB4	9697	2771
114.4	228	3.7	8.13	B103	112MB6	18995	5427
114.1	238	1.5	12.44	BA72	100LB4	5772	2886
112.5	232	2.7	8.62	B083	132S6	15394	4398
111.3	234	2.7	8.62	B083	132SA6	15440	4411
111.3	247	1.5	8.36	BA72	112MB6	5821	2910
111.2	224	2.0	26.09	B063	100L2	9819	2805

5.1 B/BA MOTORIDUTTORE (50Hz)

3.00 kW

n2 [rpm]	M2 [Nm]	fs	i	Riduttore	Motore	Fr2 D-S-P [N]	Fr2 C [N]
110.3	234	2.5	13.15	B063	112MS4	9802	2801
110.0	226	2.0	26.09	B063	100LA2	9845	2813
108.6	229	2.8	26.71	B083	100L2	15596	4456
108.2	241	3.9	8.97	B103	132S6	19326	5522
108.0	239	2.5	13.15	B063	100LB4	9855	2816
107.9	241	2.6	8.62	B083	112MB6	15582	4452
107.4	232	2.8	26.71	B083	100LA2	15643	4469
107.1	243	3.9	8.97	B103	132SA6	19387	5539
105.6	249	1.3	27.45	BA72	100L2	5923	2961
104.6	251	1.3	27.45	BA72	100LA2	5943	2972
103.7	251	3.8	8.97	B103	112MB6	19576	5593
103.5	241	1.9	28.03	B063	100L2	10003	2858
102.4	243	1.9	28.03	B063	100LA2	10030	2866
101.5	257	1.9	9.16	B063	112MB6	10000	2857
100.5	257	3.2	14.43	B083	112MS4	15911	4546
98.4	262	3.1	14.43	B083	100LB4	16007	4573
98.3	253	2.5	29.50	B083	100L2	16048	4585
97.3	256	2.5	29.50	B083	100LA2	16096	4599
97.3	280	1.5	14.91	BA72	112MS4	6088	3044
95.5	270	2.2	15.18	B063	112MS4	10165	2904
95.3	286	1.5	14.91	BA72	100LB4	6131	3065
93.6	276	2.1	15.18	B063	100LB4	10218	2919
92.4	282	2.4	10.49	B083	132S6	16284	4652
92.4	297	1.2	10.06	BA72	112MB6	6192	3096
91.5	285	2.4	10.49	B083	132SA6	16331	4666
91.2	273	2.3	31.80	B083	100L2	16397	4685
90.6	287	1.9	10.26	B063	112MB6	10287	2939
90.3	276	2.3	31.80	B083	100LA2	16446	4699
88.8	293	3.6	10.92	B103	132S6	20520	5863
88.6	294	2.3	10.49	B083	112MB6	16478	4708
87.9	296	3.5	10.92	B103	132SA6	20585	5881
87.8	299	1.1	33.04	BA72	100L2	6300	3150
87.4	295	2.9	16.60	B083	112MS4	16556	4730
86.9	302	1.0	33.04	BA72	100LA2	6322	3161
86.7	287	1.6	33.43	B063	100L2	10458	2988
85.8	290	1.6	33.43	B063	100LA2	10484	2996
85.6	301	2.8	16.60	B083	100LB4	16654	4758
85.3	302	2.0	17.00	B063	112MS4	10454	2987
85.2	306	3.4	10.92	B103	112MB6	20783	5938
84.3	309	1.8	11.03	B063	112MB6	10468	2991
84.1	296	2.2	34.49	B083	100L2	16780	4794
83.7	311	2.5	11.59	B083	132S6	16744	4784
83.5	309	1.9	17.00	B063	100LB4	10507	3002
83.2	299	2.1	34.49	B083	100LA2	16829	4808
82.9	314	2.5	11.59	B083	132SA6	16793	4798

5.1 B/BA MOTORIDUTTORE (50Hz)

3.00 kW

n2 [rpm]	M2 [Nm]	fs	i	Riduttore	Motore	Fr2 D-S-P [N]	Fr2 C [N]
80.8	337	1.2	17.94	BA72	112MS4	6476	3238
80.5	324	3.2	12.05	B103	132S6	21138	6039
80.3	324	2.4	11.59	B083	112MB6	16942	4841
79.7	327	3.2	12.05	B103	132SA6	21204	6058
79.1	326	2.6	18.32	B083	112MS4	17022	4863
79.1	344	1.2	17.94	BA72	100LB4	6521	3261
77.5	333	2.6	18.32	B083	100LB4	17121	4892
77.2	337	3.1	12.05	B103	112MB6	21407	6116
75.3	346	1.8	12.35	B063	112MB6	10754	3073
75.2	331	1.4	38.58	B063	100L2	10827	3093
74.7	368	1.0	12.44	BA72	112MB6	6647	3323
74.4	334	1.3	38.58	B063	100LA2	10854	3101
73.2	340	1.9	39.60	B083	100L2	17440	4983
72.5	343	1.9	39.60	B083	100LA2	17490	4997
70.7	368	1.7	13.15	B063	112MB6	10910	3117
70.5	353	3.6	41.12	B103	100L2	22000	6297
69.8	357	3.6	41.12	B103	100LA2	22000	6316
67.5	369	1.7	42.95	B083	100L2	17836	5096
67.2	387	2.2	14.43	B083	132S6	17787	5082
67.1	371	1.2	43.22	B063	100L2	11118	3177
66.8	372	1.7	42.95	B083	100LA2	17886	5110
66.5	391	2.2	14.43	B083	132SA6	17837	5096
66.4	375	1.2	43.22	B063	100LA2	11144	3184
65.3	417	1.0	22.19	BA72	112MS4	6952	3476
65.0	383	3.3	44.61	B103	100L2	22000	6451
64.8	398	1.5	22.39	B063	112MS4	11145	3184
64.7	402	3.1	14.99	B103	132S6	22000	6445
64.5	404	2.1	14.43	B083	112MB6	17990	5140
64.3	387	3.3	44.61	B103	100LA2	22000	6471
64.1	407	3.1	14.99	B103	132SA6	22000	6465
64.0	425	1.0	22.19	BA72	100LB4	7000	3500
63.8	390	1.6	45.44	B083	100L2	18000	5175
63.5	406	2.1	22.82	B083	112MS4	18000	5164
63.4	407	1.5	22.39	B063	100LB4	11197	3199
63.2	394	1.6	45.44	B083	100LA2	18000	5189
62.4	441	1.0	14.91	BA72	112MB6	7059	3530
62.2	414	2.1	22.82	B083	100LB4	18000	5193
62.1	420	3.0	14.99	B103	112MB6	22000	6526
61.3	425	1.5	15.18	B063	112MB6	11262	3218
61.3	406	3.1	47.28	B103	100L2	22000	6564
61.2	421	3.3	23.70	B103	112MS4	22000	6556
60.7	410	3.1	47.28	B103	100LA2	22000	6584
59.9	430	3.3	23.70	B103	100LB4	22000	6597
58.5	446	2.0	16.60	B083	132S6	18000	5276
57.8	450	2.0	16.60	B083	132SA6	18000	5290

5.1 B/BA MOTORIDUTTORE (50Hz)

3.00 kW

n2 [rpm]	M2 [Nm]	fs	i	Riduttore	Motore	Fr2 D-S-P [N]	Fr2 C [N]
57.7	431	3.0	50.24	B103	100L2	22000	6683
57.1	436	1.0	50.81	B063	100L2	11525	3293
57.1	436	2.9	50.24	B103	100LA2	22000	6703
56.7	439	1.5	51.19	B083	100L2	18000	5343
56.5	441	1.0	50.81	B063	100LA2	11551	3300
56.2	464	3.2	17.27	B103	132S6	22000	6719
56.1	444	1.4	51.19	B083	100LA2	18000	5358
56.0	465	1.9	16.60	B083	112MB6	18000	5335
55.6	464	1.3	26.09	B063	112MS4	11518	3291
55.6	469	3.1	17.27	B103	132SA6	22000	6740
54.7	476	1.3	17.00	B063	112MB6	11535	3296
54.7	471	3.2	26.51	B103	112MS4	22000	6776
54.7	455	2.8	53.02	B103	100L2	22000	6789
54.4	474	1.3	26.09	B063	100LB4	11568	3305
54.3	475	1.8	26.71	B083	112MS4	18000	5385
54.1	460	2.8	53.02	B103	100LA2	22000	6810
53.9	484	3.0	17.27	B103	112MB6	22000	6802
53.6	481	3.1	26.51	B103	100LB4	22000	6817
53.2	485	1.8	26.71	B083	100LB4	18000	5415
52.9	492	1.8	18.32	B083	132S6	18000	5415
52.4	497	1.8	18.32	B083	132SA6	18000	5429
52.2	476	1.3	55.52	B083	100L2	18000	5459
51.7	498	1.2	28.03	B063	112MS4	11689	3340
51.7	481	1.3	55.52	B083	100LA2	18000	5474
50.9	512	2.9	19.06	B103	132S6	22000	6914
50.8	513	1.7	18.32	B083	112MB6	18000	5474
50.7	509	1.2	28.03	B063	100LB4	11738	3354
50.4	517	2.8	19.06	B103	132SA6	22000	6935
49.6	502	2.5	58.50	B103	100L2	22000	6987
49.2	525	1.6	29.50	B083	112MS4	18000	5525
49.1	507	2.5	58.50	B103	100LA2	22000	7008
48.8	534	2.8	19.06	B103	112MB6	22000	6999
48.4	514	1.2	59.96	B083	100L2	18000	5570
48.1	536	1.6	29.50	B083	100LB4	18000	5555
47.9	520	1.2	59.96	B083	100LA2	18000	5585
47.5	543	2.9	30.55	B103	112MS4	22000	7060
46.5	555	2.9	30.55	B103	100LB4	22000	7103
45.6	565	1.5	31.80	B083	112MS4	18000	5632
45.5	547	1.2	63.74	B083	100L2	18000	5658
45.0	553	1.2	63.74	B083	100LA2	18000	5673
44.7	577	1.5	31.80	B083	100LB4	18000	5661
44.7	557	2.3	64.89	B103	100L2	22000	7199
44.2	563	2.3	64.89	B103	100LA2	22000	7221
43.9	588	2.9	33.07	B103	112MS4	22000	7222
43.4	595	1.0	33.43	B063	112MS4	12000	3454

5.1 B/BA MOTORIDUTTORE (50Hz)

3.00 kW

n2 [rpm]	M2 [Nm]	fs	i	Riduttore	Motore	Fr2 D-S-P [N]	Fr2 C [N]
42.9	600	2.8	33.07	B103	100LB4	22000	7265
42.5	607	1.0	33.43	B063	100LB4	12000	3467
42.5	613	1.5	22.82	B083	132S6	18000	5725
42.3	588	2.2	68.58	B103	100L2	22000	7314
42.1	619	1.4	22.82	B083	132SA6	18000	5739
42.0	613	1.4	34.49	B083	112MS4	18000	5747
41.9	593	1.1	69.14	B083	100L2	18000	5775
41.9	595	2.1	68.58	B103	100LA2	22000	7336
41.5	627	1.0	22.39	B063	112MB6	12000	3473
41.5	599	1.1	69.14	B083	100LA2	18000	5791
41.2	626	1.4	34.49	B083	100LB4	18000	5777
40.9	636	2.3	23.70	B103	132S6	22000	7359
40.8	639	1.4	22.82	B083	112MB6	18000	5784
40.5	643	2.3	23.70	B103	132SA6	22000	7381
40.4	638	2.7	35.87	B103	112MS4	22000	7390
39.9	624	2.0	72.76	B103	100L2	22000	7438
39.6	628	1.0	73.14	B083	100L2	18000	5857
39.6	651	2.6	35.87	B103	100LB4	22000	7434
39.4	631	2.0	72.76	B103	100LA2	22000	7460
39.2	634	1.0	73.14	B083	100LA2	18000	5872
39.2	664	2.2	23.70	B103	112MB6	22000	7447
36.7	677	1.9	78.92	B103	100L2	22000	7611
36.6	704	1.2	39.60	B083	112MS4	18000	5943
36.6	712	2.2	26.51	B103	132S6	22000	7595
36.4	684	1.9	78.92	B103	100LA2	22000	7634
36.3	717	1.2	26.71	B083	132S6	18000	5947
36.2	719	2.2	26.51	B103	132SA6	22000	7616
36.2	687	3.8	80.04	B123	100L2	30000	10742
35.9	719	1.2	39.60	B083	100LB4	18000	5973
35.9	725	1.2	26.71	B083	132SA6	18000	5962
35.9	694	3.8	80.04	B123	100LA2	30000	10773
35.8	721	3.9	40.53	B123	112MS4	30000	10747
35.3	731	2.3	41.12	B103	112MS4	22000	7679
35.3	739	4.0	27.51	B123	132S6	30000	10779
35.1	742	2.1	26.51	B103	112MB6	22000	7684
35.0	736	3.8	40.53	B123	100LB4	30000	10808
34.9	746	3.9	27.51	B123	132SA6	30000	10809
34.8	748	1.2	26.71	B083	112MB6	18000	6006
34.7	718	1.9	83.66	B103	100L2	22000	7737
34.5	747	2.3	41.12	B103	100LB4	22000	7723
34.3	725	1.9	83.66	B103	100LA2	22000	7759
33.8	764	1.1	42.95	B083	112MS4	18000	6058
33.1	780	1.1	42.95	B083	100LB4	18000	6088
32.9	792	1.1	29.50	B083	132S6	18000	6086
32.5	800	1.1	29.50	B083	132SA6	18000	6100

5.1 B/BA MOTORIDUTTORE (50Hz)

3.00 kW

n2 [rpm]	M2 [Nm]	fs	i	Riduttore	Motore	Fr2 D-S-P [N]	Fr2 C [N]
32.5	793	2.1	44.61	B103	112MS4	22000	7853
32.3	771	3.4	89.87	B123	100L2	30000	11085
32.3	798	3.8	44.89	B123	112MS4	30000	11046
31.9	808	1.1	45.44	B083	112MS4	18000	6137
31.9	779	3.4	89.87	B123	100LA2	30000	11116
31.8	810	2.1	44.61	B103	100LB4	22000	7898
31.7	820	2.0	30.55	B103	132S6	22000	7897
31.6	815	3.7	44.89	B123	100LB4	30000	11107
31.5	826	1.1	29.50	B083	112MB6	18000	6145
31.5	827	3.6	30.79	B123	132S6	30000	11109
31.4	829	2.0	30.55	B103	132SA6	22000	7920
31.4	792	1.7	92.31	B103	100L2	22000	7950
31.3	825	1.0	45.44	B083	100LB4	18000	6166
31.2	835	3.5	30.79	B123	132SA6	30000	11139
31.1	800	1.7	92.31	B103	100LA2	22000	7973
31.0	839	3.5	31.26	B123	132S6	30000	11153
30.7	841	2.0	47.28	B103	112MS4	22000	7979
30.7	848	3.5	31.26	B123	132SA6	30000	11184
30.5	854	1.0	31.80	B083	132S6	18000	6190
30.4	856	2.0	30.55	B103	112MB6	22000	7988
30.2	863	1.0	31.80	B083	132SA6	18000	6205
30.0	859	2.0	47.28	B103	100LB4	22000	8025
29.7	875	3.4	31.26	B123	112MB6	30000	11278
29.3	888	2.0	33.07	B103	132S6	22000	8069
29.2	890	1.0	31.80	B083	112MB6	18000	6248
29.1	855	3.1	99.70	B123	100L2	30000	11396
29.1	886	3.6	49.80	B123	112MS4	30000	11353
29.0	897	2.0	33.07	B103	132SA6	22000	8091
28.9	893	1.9	50.24	B103	112MS4	22000	8111
28.8	864	3.0	99.70	B123	100LA2	30000	11427
28.5	904	3.5	49.80	B123	100LB4	30000	11415
28.3	910	0.9	51.19	B083	112MS4	18000	6302
28.3	912	1.9	50.24	B103	100LB4	22000	8157
28.1	926	1.0	34.49	B083	132S6	18000	6302
28.1	926	1.9	33.07	B103	112MB6	22000	8160
28.0	931	3.2	34.68	B123	132S6	30000	11460
27.8	936	1.0	34.49	B083	132SA6	18000	6316
27.7	929	0.9	51.19	B083	100LB4	18000	6331
27.7	941	3.1	34.68	B123	132SA6	30000	11491
27.5	905	1.5	105.44	B103	100L2	22000	8244
27.3	943	1.8	53.02	B103	112MS4	22000	8229
27.2	914	1.5	105.44	B103	100LA2	22000	8267
27.2	915	2.9	106.65	B123	100L2	30000	11600
27.0	966	0.9	34.49	B083	112MB6	18000	6359
27.0	963	1.9	35.87	B103	132S6	22000	8246

5.1 B/BA MOTORIDUTTORE (50Hz)

3.00 kW

n2 [rpm]	M2 [Nm]	fs	i	Riduttore	Motore	Fr2 D-S-P [N]	Fr2 C [N]
26.9	925	2.8	106.65	B123	100LA2	30000	11631
26.8	973	1.8	35.87	B103	132SA6	22000	8269
26.8	963	1.8	53.02	B103	100LB4	22000	8275
26.8	971	3.0	34.68	B123	112MB6	30000	11585
26.7	966	3.3	54.30	B123	112MS4	30000	11610
26.2	986	3.2	54.30	B123	100LB4	30000	11672
25.9	1004	1.8	35.87	B103	112MB6	22000	8339
25.9	960	3.9	111.94	B143	100L2	39586	39586
25.6	970	3.9	111.94	B143	100LA2	39701	39701
25.3	985	1.4	114.80	B103	100L2	22000	8433
25.0	995	1.4	114.80	B103	100LA2	22000	8457
24.8	1040	1.6	58.50	B103	112MS4	22000	8446
24.4	1056	3.0	59.36	B123	112MS4	30000	11876
24.3	1062	1.6	58.50	B103	100LB4	22000	8493
24.2	1026	2.6	119.60	B123	100L2	30000	11947
24.1	1033	1.3	120.42	B103	100L2	22000	8541
24.0	1037	2.5	119.60	B123	100LA2	30000	11978
23.9	1078	3.0	59.36	B123	100LB4	30000	11938
23.9	1088	2.7	40.53	B123	132S6	30000	11923
23.8	1044	1.3	120.42	B103	100LA2	22000	8564
23.7	1100	2.7	40.53	B123	132SA6	30000	11954
23.6	1104	1.6	41.12	B103	132S6	22000	8547
23.3	1116	1.6	41.12	B103	132SA6	22000	8570
23.3	1069	3.5	124.62	B143	100L2	40000	40000
23.2	1113	3.0	62.59	B123	112MS4	30000	12034
23.0	1080	3.5	124.62	B143	100LA2	40000	40000
22.9	1135	2.6	40.53	B123	112MB6	30000	12048
22.7	1136	2.9	62.59	B123	100LB4	30000	12097
22.6	1152	1.6	41.12	B103	112MB6	22000	8640
22.3	1154	1.5	64.89	B103	112MS4	22000	8676
22.3	1115	2.4	129.96	B123	100L2	30000	12200
22.1	1127	2.3	129.96	B123	100LA2	30000	12231
21.9	1178	1.4	64.89	B103	100LB4	22000	8723
21.8	1140	1.2	132.87	B103	100L2	22000	8763
21.7	1198	1.5	44.61	B103	132S6	22000	8728
21.6	1152	1.2	132.87	B103	100LA2	22000	8787
21.6	1205	2.6	44.89	B123	132S6	30000	12227
21.5	1210	1.5	44.61	B103	132SA6	22000	8751
21.4	1218	2.6	44.89	B123	132SA6	30000	12258
21.3	1171	3.2	136.44	B143	100L2	40000	40000
21.1	1219	1.4	68.58	B103	112MS4	22000	8800
21.0	1183	3.2	136.44	B143	100LA2	40000	40000
20.9	1235	2.7	69.43	B123	112MS4	30000	12345
20.8	1249	1.4	44.61	B103	112MB6	22000	8821
20.7	1245	1.4	68.58	B103	100LB4	22000	8846

5.1 B/BA MOTORIDUTTORE (50Hz)

3.00 kW

n2 [rpm]	M2 [Nm]	fs	i	Riduttore	Motore	Fr2 D-S-P [N]	Fr2 C [N]
20.7	1257	2.5	44.89	B123	112MB6	30000	12352
20.6	1253	4.0	70.43	B143	112MS4	40000	40000
20.5	1270	1.4	47.28	B103	132S6	22000	8857
20.5	1261	2.6	69.43	B123	100LB4	30000	12407
20.3	1283	1.4	47.28	B103	132SA6	22000	8880
20.2	1279	3.9	70.43	B143	100LB4	40000	40000
20.1	1239	2.1	144.43	B123	100L2	30000	12521
20.0	1241	1.1	144.69	B103	100L2	22000	8956
19.9	1294	1.3	72.76	B103	112MS4	22000	8932
19.9	1252	2.1	144.43	B123	100LA2	30000	12553
19.8	1254	1.1	144.69	B103	100LA2	22000	8980
19.7	1324	1.3	47.28	B103	112MB6	22000	8951
19.5	1321	1.3	72.76	B103	100LB4	22000	8979
19.5	1337	2.5	49.80	B123	132S6	30000	12535
19.5	1323	2.6	74.42	B123	112MS4	30000	12551
19.4	1284	2.9	149.59	B143	100L2	40000	40000
19.3	1349	1.3	50.24	B103	132S6	22000	8992
19.3	1351	2.5	49.80	B123	132SA6	30000	12566
19.2	1297	2.9	149.59	B143	100LA2	40000	40000
19.2	1354	3.9	48.35	B143	112MB6	40000	40000
19.1	1363	1.3	50.24	B103	132SA6	22000	9015
19.1	1351	2.6	74.42	B123	100LB4	30000	12614
18.8	1371	3.6	77.12	B143	112MS4	40000	40000
18.7	1395	2.4	49.80	B123	112MB6	30000	12660
18.5	1407	1.3	50.24	B103	112MB6	22000	9086
18.4	1403	1.2	78.92	B103	112MS4	22000	9114
18.4	1400	3.6	77.12	B143	100LB4	40000	40000
18.3	1424	1.3	53.02	B103	132S6	22000	9112
18.2	1427	3.7	53.16	B143	132S6	40000	40000
18.1	1438	1.2	53.02	B103	132SA6	22000	9135
18.1	1423	2.5	80.04	B123	112MS4	30000	12768
18.1	1375	1.9	160.23	B123	100L2	30000	12836
18.1	1442	3.6	53.16	B143	132SA6	40000	40000
18.0	1433	1.2	78.92	B103	100LB4	22000	9161
17.9	1458	2.3	54.30	B123	132S6	30000	12790
17.9	1389	1.9	160.23	B123	100LA2	30000	12867
17.8	1467	3.6	54.63	B143	132S6	40000	40000
17.7	1473	2.3	54.30	B123	132SA6	30000	12821
17.7	1453	2.4	80.04	B123	100LB4	30000	12830
17.6	1482	3.5	54.63	B143	132SA6	40000	40000
17.5	1485	1.2	53.02	B103	112MB6	22000	9205
17.5	1489	3.5	53.16	B143	112MB6	40000	40000
17.4	1429	2.6	166.53	B143	100L2	40000	40000
17.3	1488	1.2	83.66	B103	112MS4	22000	9244
17.2	1444	2.6	166.53	B143	100LA2	40000	40000

5.1 B/BA MOTORIDUTTORE (50Hz)

3.00 kW

n2 [rpm]	M2 [Nm]	fs	i	Riduttore	Motore	Fr2 D-S-P [N]	Fr2 C [N]
17.1	1521	2.2	54.30	B123	112MB6	30000	12914
17.0	1519	1.2	83.66	B103	100LB4	22000	9291
17.0	1521	3.3	85.54	B143	112MS4	40000	40000
17.0	1530	3.4	54.63	B143	112MB6	40000	40000
16.6	1571	1.1	58.50	B103	132S6	22000	9330
16.6	1553	3.2	85.54	B143	100LB4	40000	40000
16.4	1587	1.1	58.50	B103	132SA6	22000	9353
16.4	1584	3.3	59.02	B143	132S6	40000	40000
16.3	1594	2.1	59.36	B123	132S6	30000	13051
16.3	1601	3.3	59.02	B143	132SA6	40000	40000
16.2	1610	2.1	59.36	B123	132SA6	30000	13081
16.1	1598	2.2	89.87	B123	112MS4	30000	13108
16.1	1548	1.7	180.40	B123	100L2	30000	13193
15.9	1638	1.1	58.50	B103	112MB6	22000	9423
15.9	1564	1.7	180.40	B123	100LA2	30000	13224
15.8	1632	2.1	89.87	B123	100LB4	30000	13169
15.8	1653	3.2	59.02	B143	112MB6	40000	40000
15.7	1641	1.1	92.31	B103	112MS4	22000	9463
15.7	1662	2.0	59.36	B123	112MB6	30000	13172
15.5	1680	2.1	62.59	B123	132S6	30000	13204
15.5	1607	2.3	187.24	B143	100L2	40000	40000
15.4	1676	1.1	92.31	B103	100LB4	22000	9509
15.4	1674	3.0	94.13	B143	112MS4	40000	40000
15.3	1698	2.0	62.59	B123	132SA6	30000	13234
15.3	1623	2.3	187.24	B143	100LA2	40000	40000
15.1	1709	2.9	94.13	B143	100LB4	40000	40000
15.0	1742	3.0	64.88	B143	132S6	40000	40000
14.9	1742	1.0	64.89	B103	132S6	22000	9559
14.9	1753	2.0	62.59	B123	112MB6	30000	13324
14.8	1760	1.0	64.89	B103	132SA6	22000	9581
14.8	1760	3.0	64.88	B143	132SA6	40000	40000
14.5	1773	2.0	99.70	B123	112MS4	30000	13409
14.3	1817	1.0	64.89	B103	112MB6	22000	9651
14.3	1817	2.9	64.88	B143	112MB6	40000	40000
14.2	1810	1.9	99.70	B123	100LB4	30000	13469
14.1	1841	1.0	68.58	B103	132S6	22000	9680
14.0	1860	1.0	68.58	B103	132SA6	22000	9702
14.0	1864	1.9	69.43	B123	132S6	30000	13499
13.8	1875	1.0	105.44	B103	112MS4	22000	9756
13.8	1884	1.8	69.43	B123	132SA6	30000	13529
13.8	1891	2.8	70.43	B143	132S6	40000	40000
13.7	1882	2.7	105.83	B143	112MS4	40000	40000
13.6	1920	0.9	68.58	B103	112MB6	22000	9771
13.6	1897	1.8	106.65	B123	112MS4	30000	13601
13.6	1911	2.7	70.43	B143	132SA6	40000	40000

5.1 B/BA MOTORIDUTTORE (50Hz)

3.00 kW

n2 [rpm]	M2 [Nm]	fs	i	Riduttore	Motore	Fr2 D-S-P [N]	Fr2 C [N]
13.5	1915	0.9	105.44	B103	100LB4	22000	9802
13.4	1944	1.8	69.43	B123	112MB6	30000	13617
13.4	1922	2.6	105.83	B143	100LB4	40000	40000
13.3	1953	0.9	72.76	B103	132S6	22000	9808
13.3	1937	1.8	106.65	B123	100LB4	30000	13659
13.2	1974	0.9	72.76	B103	132SA6	22000	9830
13.2	1972	2.7	70.43	B143	112MB6	40000	40000
13.0	1998	1.8	74.42	B123	132S6	30000	13693
13.0	1991	2.5	111.94	B143	112MS4	40000	40000
12.9	2019	1.8	74.42	B123	132SA6	30000	13721
12.7	2033	2.5	111.94	B143	100LB4	40000	40000
12.6	2070	2.5	77.12	B143	132S6	40000	40000
12.5	2084	1.8	74.42	B123	112MB6	30000	13808
12.4	2092	2.5	77.12	B143	132SA6	40000	40000
12.1	2149	1.7	80.04	B123	132S6	30000	13891
12.1	2127	1.6	119.60	B123	112MS4	30000	13918
12.1	2160	2.4	77.12	B143	112MB6	40000	40000
12.0	2171	1.7	80.04	B123	132SA6	30000	13919
11.9	2172	1.6	119.60	B123	100LB4	30000	13975
11.6	2241	1.6	80.04	B123	112MB6	30000	14004
11.6	2216	2.3	124.62	B143	112MS4	40000	40000
11.6	2252	3.7	83.89	B153	132S6	65000	65000
11.4	2263	2.2	124.62	B143	100LB4	40000	40000
11.4	2276	3.7	83.89	B153	132SA6	65000	65000
11.3	2297	2.3	85.54	B143	132S6	40000	40000
11.2	2311	1.5	129.96	B123	112MS4	30000	14141
11.2	2321	2.3	85.54	B143	132SA6	40000	40000
11.1	2353	3.6	87.65	B153	132S6	65000	65000
11.0	2378	3.5	87.65	B153	132SA6	65000	65000
10.9	2360	1.5	129.96	B123	100LB4	30000	14196
10.9	2396	2.2	85.54	B143	112MB6	40000	40000
10.8	2413	1.5	89.87	B123	132S6	30000	14196
10.7	2438	1.5	89.87	B123	132SA6	30000	14222
10.6	2426	2.1	136.44	B143	112MS4	40000	40000
10.4	2478	2.0	136.44	B143	100LB4	40000	40000
10.4	2498	3.4	93.05	B153	132S6	65000	65000
10.3	2517	1.5	89.87	B123	112MB6	30000	14303
10.3	2527	2.1	94.13	B143	132S6	40000	40000
10.3	2524	3.3	93.05	B153	132SA6	65000	65000
10.2	2553	2.1	94.13	B143	132SA6	40000	40000
10.0	2568	1.4	144.43	B123	112MS4	30000	14412
9.9	2636	2.0	94.13	B143	112MB6	40000	40000
9.8	2623	1.3	144.43	B123	100LB4	30000	14464
9.7	2677	1.4	99.70	B123	132S6	30000	14455
9.7	2660	1.9	149.59	B143	112MS4	40000	40000

5.1 B/BA MOTORIDUTTORE (50Hz)

3.00 kW

n2 [rpm]	M2 [Nm]	fs	i	Riduttore	Motore	Fr2 D-S-P [N]	Fr2 C [N]
9.6	2705	1.4	99.70	B123	132SA6	30000	14480
9.5	2716	1.8	149.59	B143	100LB4	40000	40000
9.4	2768	3.0	103.12	B153	132S6	65000	65000
9.3	2792	1.3	99.70	B123	112MB6	30000	14555
9.3	2797	3.0	103.12	B153	132SA6	65000	65000
9.2	2841	1.8	105.83	B143	132S6	40000	40000
9.1	2863	1.3	106.65	B123	132S6	30000	14614
9.1	2871	1.8	105.83	B143	132SA6	40000	40000
9.0	2893	1.3	106.65	B123	132SA6	30000	14638
9.0	2849	1.2	160.23	B123	112MS4	30000	14663
8.9	2909	1.2	160.23	B123	100LB4	30000	14711
8.8	2964	1.8	105.83	B143	112MB6	40000	40000
8.7	2987	1.2	106.65	B123	112MB6	30000	14709
8.7	3005	1.7	111.94	B143	132S6	40000	40000
8.7	2961	1.7	166.53	B143	112MS4	40000	40000
8.6	3037	1.7	111.94	B143	132SA6	40000	40000
8.5	3024	1.7	166.53	B143	100LB4	40000	40000
8.3	3135	1.7	111.94	B143	112MB6	40000	40000
8.1	3211	1.1	119.60	B123	132S6	30000	14865
8.0	3244	1.1	119.60	B123	132SA6	30000	14887
8.0	3208	1.1	180.40	B123	112MS4	30000	14926
7.9	3276	1.1	180.40	B123	100LB4	30000	14970
7.8	3349	1.1	119.60	B123	112MB6	30000	14951
7.8	3346	1.6	124.62	B143	132S6	40000	40000
7.8	3326	2.5	123.88	B153	132S6	65000	65000
7.7	3381	1.6	124.62	B143	132SA6	40000	40000
7.7	3330	1.5	187.24	B143	112MS4	40000	40000
7.7	3361	2.5	123.88	B153	132SA6	65000	65000
7.6	3400	1.5	187.24	B143	100LB4	40000	40000
7.5	3489	1.1	129.96	B123	132S6	30000	15030
7.5	3490	1.5	124.62	B143	112MB6	40000	40000
7.4	3526	1.0	129.96	B123	132SA6	30000	15050
7.2	3639	1.0	129.96	B123	112MB6	30000	15108
7.2	3605	2.3	134.27	B153	132S6	65000	65000
7.2	3642	2.3	134.27	B153	132SA6	65000	65000
7.1	3663	1.4	136.44	B143	132S6	40000	40000
7.0	3701	1.4	136.44	B143	132SA6	40000	40000
6.8	3821	1.4	136.44	B143	112MB6	40000	40000
6.7	3878	0.9	144.43	B123	132S6	30000	15215
6.6	3918	0.9	144.43	B123	132SA6	30000	15232
6.5	4016	1.3	149.59	B143	132S6	40000	40000
6.5	4007	2.1	149.26	B153	132S6	65000	65000
6.4	4044	0.9	144.43	B123	112MB6	30000	15281
6.4	4058	1.3	149.59	B143	132SA6	40000	40000
6.4	4049	2.1	149.26	B153	132SA6	65000	65000

5.1 B/BA MOTORIDUTTORE (50Hz)

3.00 kW

n2 [rpm]	M2 [Nm]	fs	i	Riduttore	Motore	Fr2 D-S-P [N]	Fr2 C [N]
6.2	4189	1.3	149.59	B143	112MB6	40000	40000
5.9	4441	1.9	165.42	B153	132S6	65000	65000
5.8	4471	1.2	166.53	B143	132S6	40000	40000
5.8	4518	1.2	166.53	B143	132SA6	40000	40000
5.8	4487	1.9	165.42	B153	132SA6	65000	65000
5.6	4663	1.1	166.53	B143	112MB6	40000	40000
5.2	5027	1.0	187.24	B143	132S6	40000	40000
5.1	5079	1.0	187.24	B143	132SA6	40000	40000
5.0	5243	1.0	187.24	B143	112MB6	40000	40000

4.00 kW

n2 [rpm]	M2 [Nm]	fs	i	Riduttore	Motore	Fr2 D-S-P [N]	Fr2 C [N]
512.7	65	3.4	5.71	B063	112M2	6246	1785
507.5	65	3.3	5.71	B063	112MA2	6266	1790
502.2	66	3.3	5.71	B063	100LB2	6285	1796
425.9	78	3.3	6.88	B063	112M2	6600	1886
421.6	79	3.2	6.88	B063	112MA2	6620	1891
417.2	80	3.2	6.88	B063	100LB2	6640	1897
400.1	83	3.2	7.32	B063	112M2	6722	1921
396.0	84	3.1	7.32	B063	112MA2	6742	1926
391.9	85	3.1	7.32	B063	100LB2	6763	1932
350.6	100	2.6	8.36	BA72	112M2	3971	1985
347.0	101	2.6	8.36	BA72	112MA2	3984	1992
343.4	102	2.6	8.36	BA72	100LB2	3998	1999
319.8	104	3.3	9.16	B063	112M2	7172	2049
316.6	105	3.3	9.16	B063	112MA2	7193	2055
313.3	106	3.3	9.16	B063	100LB2	7215	2061
291.3	120	2.2	10.06	BA72	112M2	4224	2112
288.3	121	2.2	10.06	BA72	112MA2	4238	2119
285.5	116	3.4	10.26	B063	112M2	7408	2116
285.3	123	2.1	10.06	BA72	100LB2	4253	2127
282.6	117	3.3	10.26	B063	112MA2	7429	2123
279.6	119	3.3	10.26	B063	100LB2	7451	2129
265.7	125	3.2	11.03	B063	112M2	7559	2160
263.0	126	3.2	11.03	B063	112MA2	7581	2166
260.3	127	3.2	11.03	B063	100LB2	7603	2172
253.7	136	2.1	5.71	B063	112M4	7635	2182
252.0	136	2.1	5.71	B063	112MA4	7650	2186
237.2	140	3.1	12.35	B063	112M2	7801	2229
235.5	149	1.8	12.44	BA72	112M2	4534	2267
234.7	141	3.1	12.35	B063	112MA2	7824	2235
233.1	150	1.7	12.44	BA72	112MA2	4550	2275
232.3	143	3.0	12.35	B063	100LB2	7846	2242

5.1 B/BA MOTORIDUTTORE (50Hz)

4.00 kW

n2 [rpm]	M2 [Nm]	fs	i	Riduttore	Motore	Fr2 D-S-P [N]	Fr2 C [N]
230.7	152	1.7	12.44	BA72	100LB2	4565	2283
222.8	149	3.0	13.15	B063	112M2	7936	2268
220.5	150	2.9	13.15	B063	112MA2	7959	2274
218.2	152	2.9	13.15	B063	100LB2	7981	2280
210.8	163	2.1	6.88	B063	112M4	8031	2295
209.3	164	2.1	6.88	B063	112MA4	8046	2299
203.1	163	3.7	14.43	B083	112M2	12777	3651
201.0	165	3.7	14.43	B083	112MA2	12816	3662
198.9	167	3.6	14.43	B083	100LB2	12856	3673
198.0	174	2.0	7.32	B063	112M4	8167	2333
196.6	175	2.0	7.32	B063	112MA4	8182	2338
196.6	178	1.8	14.91	BA72	112M2	4815	2408
194.5	180	1.7	14.91	BA72	112MA2	4832	2416
193.1	172	2.6	15.18	B063	112M2	8249	2357
192.5	182	1.7	14.91	BA72	100LB2	4849	2424
191.1	174	2.5	15.18	B063	112MA2	8272	2363
189.1	175	2.5	15.18	B063	100LB2	8295	2370
185.7	185	2.7	7.81	B083	112M4	13092	3741
184.4	186	2.7	7.81	B083	112MA4	13119	3748
176.6	188	3.4	16.60	B083	112M2	13313	3804
174.7	190	3.4	16.60	B083	112MA2	13353	3815
173.5	209	1.7	8.36	BA72	112M4	5020	2510
172.9	192	3.3	16.60	B083	100LB2	13393	3827
172.3	193	2.3	17.00	B063	112M2	8501	2429
172.3	211	1.7	8.36	BA72	112MA4	5032	2516
170.6	195	2.3	17.00	B063	112MA2	8524	2435
168.8	197	2.3	17.00	B063	100LB2	8547	2442
168.2	204	2.9	8.62	B083	112M4	13474	3850
167.0	206	2.9	8.62	B083	112MA4	13501	3857
163.3	214	1.5	17.94	BA72	112M2	5122	2561
161.6	217	1.5	17.94	BA72	112MA2	5140	2570
160.0	219	1.4	17.94	BA72	100LB2	5158	2579
159.9	207	3.1	18.32	B083	112M2	13701	3915
158.3	217	2.1	9.16	B063	112M4	8656	2473
158.3	210	3.0	18.32	B083	112MA2	13742	3926
157.2	219	2.1	9.16	B063	112MA4	8671	2478
156.6	212	3.0	18.32	B083	100LB2	13783	3938
144.1	252	1.4	10.06	BA72	112M4	5340	2670
143.1	254	1.4	10.06	BA72	112MA4	5352	2676
141.3	243	2.1	10.26	B063	112M4	8907	2545
140.3	245	2.1	10.26	B063	112MA4	8922	2549
138.2	249	2.6	10.49	B083	112M4	14252	4072
137.2	251	2.6	10.49	B083	112MA4	14280	4080
132.8	259	3.9	10.92	B103	112M4	17964	5133
132.0	265	1.2	22.19	BA72	112M2	5499	2749

5.1 B/BA MOTORIDUTTORE (50Hz)

4.00 kW

n2 [rpm]	M2 [Nm]	fs	i	Riduttore	Motore	Fr2 D-S-P [N]	Fr2 C [N]
131.9	261	3.8	10.92	B103	112MA4	18002	5143
131.5	261	2.1	11.03	B063	112M4	9065	2590
130.8	254	1.8	22.39	B063	112M2	9117	2605
130.7	268	1.2	22.19	BA72	112MA2	5518	2759
130.6	263	2.1	11.03	B063	112MA4	9080	2594
129.5	256	1.8	22.39	B063	112MA2	9140	2611
129.3	271	1.2	22.19	BA72	100LB2	5537	2768
128.4	258	2.5	22.82	B083	112M2	14587	4168
128.2	259	1.7	22.39	B063	100LB2	9163	2618
127.1	261	2.4	22.82	B083	112MA2	14630	4180
125.8	264	2.4	22.82	B083	100LB2	14672	4192
125.1	275	2.7	11.59	B083	112M4	14654	4187
124.3	277	2.7	11.59	B083	112MA4	14683	4195
123.6	268	3.9	23.70	B103	112M2	18383	5252
122.9	282	1.9	7.81	B083	132MA6	14716	4205
122.4	271	3.9	23.70	B103	112MA2	18440	5269
121.1	274	3.8	23.70	B103	100LB2	18498	5285
120.3	286	3.5	12.05	B103	112M4	18505	5287
119.5	288	3.5	12.05	B103	112MA4	18543	5298
118.1	294	2.9	8.13	B103	132MA6	18600	5314
117.4	293	2.0	12.35	B063	112M4	9314	2661
116.6	295	2.0	12.35	B063	112MA4	9329	2666
116.5	311	1.1	12.44	BA72	112M4	5732	2866
115.7	314	1.1	12.44	BA72	112MA4	5745	2873
112.3	295	1.5	26.09	B063	112M2	9459	2703
111.3	312	2.0	8.62	B083	132MA6	15124	4321
111.2	298	1.5	26.09	B063	112MA2	9482	2709
110.5	300	3.7	26.51	B103	112M2	19014	5433
110.3	312	1.9	13.15	B063	112M4	9451	2700
110.0	302	1.5	26.09	B063	100LB2	9505	2716
109.7	302	2.1	26.71	B083	112M2	15243	4355
109.5	314	1.9	13.15	B063	112MA4	9466	2704
109.4	303	3.7	26.51	B103	112MA2	19073	5449
108.6	306	2.1	26.71	B083	112MA2	15287	4368
108.2	306	3.7	26.51	B103	100LB2	19132	5466
107.4	309	2.1	26.71	B083	100LB2	15331	4380
107.1	324	2.9	8.97	B103	132MA6	19154	5473
104.5	317	1.4	28.03	B063	112M2	9618	2748
103.5	321	1.4	28.03	B063	112MA2	9641	2755
102.4	324	1.4	28.03	B063	100LB2	9664	2761
100.5	342	2.4	14.43	B083	112M4	15565	4447
99.8	344	2.4	14.43	B083	112MA4	15595	4456
99.3	334	1.9	29.50	B083	112M2	15663	4475
98.3	337	1.9	29.50	B083	112MA2	15707	4488
97.3	341	1.9	29.50	B083	100LB2	15752	4500

5.1 B/BA MOTORIDUTTORE (50Hz)

4.00 kW

n2 [rpm]	M2 [Nm]	fs	i	Riduttore	Motore	Fr2 D-S-P [N]	Fr2 C [N]
97.3	373	1.1	14.91	BA72	112M4	6088	3044
96.8	355	3.4	14.99	B103	112M4	19747	5642
96.6	376	1.1	14.91	BA72	112MA4	6102	3051
96.1	358	3.4	14.99	B103	112MA4	19787	5653
95.9	346	3.5	30.55	B103	112M2	19835	5667
95.5	360	1.6	15.18	B063	112M4	9759	2788
94.9	362	1.6	15.18	B063	112MA4	9774	2793
94.9	350	3.4	30.55	B103	112MA2	19896	5684
93.9	353	3.4	30.55	B103	100LB2	19957	5702
92.1	360	1.8	31.80	B083	112M2	15985	4567
91.5	380	1.8	10.49	B083	132MA6	15948	4556
91.2	364	1.8	31.80	B083	112MA2	16029	4580
90.3	368	1.7	31.80	B083	100LB2	16074	4593
88.6	374	3.4	33.07	B103	112M2	20304	5801
87.9	395	2.7	10.92	B103	132MA6	20301	5800
87.7	378	3.4	33.07	B103	112MA2	20365	5819
87.6	379	1.2	33.43	B063	112M2	10004	2858
87.4	393	2.2	16.60	B083	112M4	16158	4617
86.8	396	2.1	16.60	B083	112MA4	16188	4625
86.8	382	3.3	33.07	B103	100LB2	20428	5836
86.7	382	1.2	33.43	B063	112MA2	10026	2865
85.8	386	1.2	33.43	B063	100LB2	10048	2871
85.3	403	1.5	17.00	B063	112M4	9999	2857
84.9	391	1.6	34.49	B083	112M2	16336	4667
84.7	406	1.5	17.00	B063	112MA4	10013	2861
84.1	395	1.6	34.49	B083	112MA2	16381	4680
84.0	409	3.4	17.27	B103	112M4	20586	5882
83.4	412	3.4	17.27	B103	112MA4	20628	5894
83.2	399	1.6	34.49	B083	100LB2	16426	4693
82.9	419	1.9	11.59	B083	132MA6	16369	4677
81.7	406	3.1	35.87	B103	112M2	20794	5941
80.8	410	3.1	35.87	B103	112MA2	20857	5959
80.8	449	0.9	17.94	BA72	112M4	6476	3238
80.3	452	0.9	17.94	BA72	112MA4	6491	3246
80.0	415	3.1	35.87	B103	100LB2	20920	5977
79.7	436	2.4	12.05	B103	132MA6	20891	5969
79.1	434	2.0	18.32	B083	112M4	16582	4738
78.6	437	1.9	18.32	B083	112MA4	16612	4746
76.1	452	3.1	19.06	B103	112M4	21183	6052
76.0	437	1.0	38.58	B063	112M2	10307	2945
75.6	455	3.1	19.06	B103	112MA4	21225	6064
75.2	441	1.0	38.58	B063	112MA2	10329	2951
74.4	446	1.0	38.58	B063	100LB2	10350	2957
74.0	448	1.4	39.60	B083	112M2	16937	4839
73.2	453	1.4	39.60	B083	112MA2	16982	4852

5.1 B/BA MOTORIDUTTORE (50Hz)

4.00 kW

n2 [rpm]	M2 [Nm]	fs	i	Riduttore	Motore	Fr2 D-S-P [N]	Fr2 C [N]
72.5	458	1.4	39.60	B083	100LB2	17027	4865
71.2	466	2.7	41.12	B103	112M2	21636	6182
70.5	470	2.7	41.12	B103	112MA2	21701	6200
69.8	475	2.7	41.12	B103	100LB2	21766	6219
68.2	486	1.3	42.95	B083	112M2	17293	4941
67.5	491	1.3	42.95	B083	112MA2	17339	4954
66.8	497	1.3	42.95	B083	100LB2	17384	4967
66.5	522	1.6	14.43	B083	132MA6	17309	4945
65.7	505	2.5	44.61	B103	112M2	22000	6328
65.0	510	2.5	44.61	B103	112MA2	22000	6347
64.8	531	1.1	22.39	B063	112M4	10546	3013
64.5	514	1.2	45.44	B083	112M2	17540	5012
64.3	535	1.1	22.39	B063	112MA4	10559	3017
64.3	516	2.5	44.61	B103	100LB2	22000	6366
64.1	542	2.3	14.99	B103	132MA6	22000	6354
63.8	520	1.2	45.44	B083	112MA2	17586	5024
63.5	541	1.6	22.82	B083	112M4	17528	5008
63.2	525	1.2	45.44	B083	100LB2	17631	5038
63.1	545	1.6	22.82	B083	112MA4	17558	5017
62.4	556	4.0	15.38	B123	132MA6	30000	9001
62.0	535	2.4	47.28	B103	112M2	22000	6434
61.3	541	2.4	47.28	B103	112MA2	22000	6453
61.2	562	2.5	23.70	B103	112M4	22000	6441
60.8	566	2.5	23.70	B103	112MA4	22000	6454
60.7	547	2.3	47.28	B103	100LB2	22000	6472
58.3	569	2.2	50.24	B103	112M2	22000	6545
57.8	600	1.5	16.60	B083	132MA6	17909	5117
57.7	575	2.2	50.24	B103	112MA2	22000	6564
57.2	580	1.1	51.19	B083	112M2	18000	5161
57.1	581	2.2	50.24	B103	100LB2	22000	6584
56.7	586	1.1	51.19	B083	112MA2	18000	5174
56.1	592	1.1	51.19	B083	100LB2	18000	5187
55.6	619	1.0	26.09	B063	112M4	10820	3091
55.6	625	2.4	17.27	B103	132MA6	22000	6612
55.3	600	2.1	53.02	B103	112M2	22000	6645
55.2	623	1.0	26.09	B063	112MA4	10832	3095
54.7	629	2.4	26.51	B103	112M4	22000	6647
54.7	607	2.1	53.02	B103	112MA2	22000	6665
54.3	633	1.3	26.71	B083	112M4	18000	5202
54.3	633	2.4	26.51	B103	112MA4	22000	6659
54.1	613	2.1	53.02	B103	100LB2	22000	6684
54.0	615	3.9	54.30	B123	112M2	30000	9403
53.9	638	1.3	26.71	B083	112MA4	18000	5211
53.4	621	3.9	54.30	B123	112MA2	30000	9429
52.9	628	3.8	54.30	B123	100LB2	30000	9456

5.1 B/BA MOTORIDUTTORE (50Hz)

4.00 kW

n2 [rpm]	M2 [Nm]	fs	i	Riduttore	Motore	Fr2 D-S-P [N]	Fr2 C [N]
52.8	629	1.0	55.52	B083	112M2	18000	5263
52.4	663	1.3	18.32	B083	132MA6	18000	5238
52.2	635	1.0	55.52	B083	112MA2	18000	5276
51.7	665	0.9	28.03	B063	112M4	10939	3125
51.7	672	3.4	18.58	B123	132MA6	30000	9474
50.4	689	2.1	19.06	B103	132MA6	22000	6794
50.1	662	1.9	58.50	B103	112M2	22000	6830
49.6	669	1.9	58.50	B103	112MA2	22000	6849
49.4	672	3.6	59.36	B123	112M2	30000	9632
49.2	699	1.2	29.50	B083	112M4	18000	5323
49.1	676	1.9	58.50	B103	100LB2	22000	6869
48.9	679	3.5	59.36	B123	112MA2	30000	9659
48.8	704	1.2	29.50	B083	112MA4	18000	5331
48.4	686	3.5	59.36	B123	100LB2	30000	9685
47.5	724	2.2	30.55	B103	112M4	22000	6911
47.1	729	2.2	30.55	B103	112MA4	22000	6924
46.8	709	3.5	62.59	B123	112M2	30000	9769
46.6	745	3.5	20.61	B123	132MA6	30000	9739
46.4	741	3.8	31.26	B123	112M4	30000	9760
46.3	716	3.5	62.59	B123	112MA2	30000	9796
46.1	746	3.8	31.26	B123	112MA4	30000	9777
45.9	723	3.4	62.59	B123	100LB2	30000	9823
45.6	754	1.1	31.80	B083	112M4	18000	5414
45.3	759	1.1	31.80	B083	112MA4	18000	5422
45.2	735	1.7	64.89	B103	112M2	22000	7027
44.7	742	1.7	64.89	B103	112MA2	22000	7047
44.2	750	1.7	64.89	B103	100LB2	22000	7067
43.9	784	2.2	33.07	B103	112M4	22000	7061
43.5	789	2.2	33.07	B103	112MA4	22000	7074
42.7	776	1.6	68.58	B103	112M2	22000	7133
42.3	785	1.6	68.58	B103	112MA2	22000	7153
42.2	786	3.1	69.43	B123	112M2	30000	10040
42.1	825	1.1	22.82	B083	132MA6	18000	5501
42.1	824	3.6	22.78	B123	132MA6	30000	9996
42.0	818	1.0	34.49	B083	112M4	18000	5511
41.9	793	1.6	68.58	B103	100LB2	22000	7173
41.8	822	3.4	34.68	B123	112M4	30000	10027
41.8	794	3.1	69.43	B123	112MA2	30000	10067
41.7	823	1.0	34.49	B083	112MA4	18000	5519
41.5	828	3.4	34.68	B123	112MA4	30000	10045
41.3	803	3.1	69.43	B123	100LB2	30000	10095
40.5	857	1.7	23.70	B103	132MA6	22000	7205
40.4	850	2.0	35.87	B103	112M4	22000	7216
40.3	824	1.5	72.76	B103	112M2	22000	7248
40.1	856	2.0	35.87	B103	112MA4	22000	7229

5.1 B/BA MOTORIDUTTORE (50Hz)

4.00 kW

n2 [rpm]	M2 [Nm]	fs	i	Riduttore	Motore	Fr2 D-S-P [N]	Fr2 C [N]
39.9	832	1.5	72.76	B103	112MA2	22000	7267
39.4	841	1.5	72.76	B103	100LB2	22000	7288
39.4	843	3.1	74.42	B123	112M2	30000	10223
39.0	851	3.1	74.42	B123	112MA2	30000	10250
38.6	860	3.1	74.42	B123	100LB2	30000	10277
37.1	894	1.4	78.92	B103	112M2	22000	7406
37.1	936	3.1	25.89	B123	132MA6	30000	10326
36.7	903	1.4	78.92	B103	112MA2	22000	7426
36.6	939	0.9	39.60	B083	112M4	18000	5672
36.6	906	2.9	80.04	B123	112M2	30000	10415
36.4	912	1.4	78.92	B103	100LB2	22000	7446
36.2	959	1.6	26.51	B103	132MA6	22000	7420
36.2	916	2.9	80.04	B123	112MA2	30000	10442
35.9	966	0.9	26.71	B083	132MA6	18000	5682
35.9	925	2.8	80.04	B123	100LB2	30000	10469
35.8	961	2.9	40.53	B123	112M4	30000	10431
35.5	968	2.9	40.53	B123	112MA4	30000	10449
35.3	975	1.7	41.12	B103	112M4	22000	7479
35.0	982	1.7	41.12	B103	112MA4	22000	7492
35.0	947	1.4	83.66	B103	112M2	22000	7520
34.9	995	3.0	27.51	B123	132MA6	30000	10483
34.7	957	1.4	83.66	B103	112MA2	22000	7540
34.3	967	1.4	83.66	B103	100LB2	22000	7560
34.3	969	3.9	85.54	B143	112M2	35806	35806
33.9	979	3.8	85.54	B143	112MA2	35906	35906
33.5	989	3.8	85.54	B143	100LB2	36008	36008
32.6	1018	2.6	89.87	B123	112M2	30000	10720
32.5	1058	1.6	44.61	B103	112M4	22000	7636
32.3	1065	1.6	44.61	B103	112MA4	22000	7649
32.3	1028	2.6	89.87	B123	112MA2	30000	10748
32.3	1064	2.8	44.89	B123	112M4	30000	10696
32.1	1072	2.8	44.89	B123	112MA4	30000	10714
31.9	1039	2.5	89.87	B123	100LB2	30000	10775
31.7	1045	1.3	92.31	B103	112M2	22000	7713
31.4	1056	1.3	92.31	B103	112MA2	22000	7733
31.4	1105	1.5	30.55	B103	132MA6	22000	7693
31.2	1114	2.6	30.79	B123	132MA6	30000	10774
31.1	1067	1.3	92.31	B103	100LB2	22000	7754
31.1	1066	3.5	94.13	B143	112M2	36743	36743
30.8	1077	3.5	94.13	B143	112MA2	36844	36844
30.7	1121	1.5	47.28	B103	112M4	22000	7749
30.7	1131	2.6	31.26	B123	132MA6	30000	10813
30.5	1129	1.5	47.28	B103	112MA4	22000	7762
30.5	1088	3.4	94.13	B143	100LB2	36947	36947
29.4	1129	2.3	99.70	B123	112M2	30000	10995

5.1 B/BA MOTORIDUTTORE (50Hz)

4.00 kW

n2 [rpm]	M2 [Nm]	fs	i	Riduttore	Motore	Fr2 D-S-P [N]	Fr2 C [N]
29.1	1141	2.3	99.70	B123	112MA2	30000	11022
29.1	1181	2.7	49.80	B123	112M4	30000	10965
29.0	1196	1.5	33.07	B103	132MA6	22000	7845
28.9	1191	1.4	50.24	B103	112M4	22000	7867
28.9	1189	2.7	49.80	B123	112MA4	30000	10983
28.8	1152	2.3	99.70	B123	100LB2	30000	11049
28.7	1199	1.4	50.24	B103	112MA4	22000	7880
27.8	1194	1.1	105.44	B103	112M2	22000	7976
27.7	1255	2.3	34.68	B123	132MA6	30000	11079
27.7	1198	3.1	105.83	B143	112M2	37903	37903
27.5	1206	1.1	105.44	B103	112MA2	22000	7996
27.5	1208	2.2	106.65	B123	112M2	30000	11172
27.4	1211	3.1	105.83	B143	112MA2	38005	38005
27.3	1257	1.4	53.02	B103	112M4	22000	7971
27.3	1260	4.0	53.16	B143	112M4	37910	37910
27.2	1266	1.3	53.02	B103	112MA4	22000	7984
27.2	1219	1.1	105.44	B103	100LB2	22000	8017
27.2	1220	2.2	106.65	B123	112MA2	30000	11199
27.1	1269	3.9	53.16	B143	112MA4	37978	37978
27.1	1223	3.1	105.83	B143	100LB2	38109	38109
26.9	1233	2.1	106.65	B123	100LB2	30000	11226
26.8	1297	1.4	35.87	B103	132MA6	22000	8002
26.7	1287	2.5	54.30	B123	112M4	30000	11187
26.5	1296	2.5	54.30	B123	112MA4	30000	11205
26.5	1295	3.9	54.63	B143	112M4	38178	38178
26.4	1304	3.8	54.63	B143	112MA4	38246	38246
26.2	1326	3.8	36.67	B143	132MA6	38273	38273
26.2	1267	3.0	111.94	B143	112M2	38462	38462
25.9	1281	2.9	111.94	B143	112MA2	38565	38565
25.6	1294	2.9	111.94	B143	100LB2	38669	38669
25.5	1300	1.0	114.80	B103	112M2	22000	8143
25.3	1313	1.0	114.80	B103	112MA2	22000	8164
25.0	1327	1.0	114.80	B103	100LB2	22000	8184
24.8	1387	1.2	58.50	B103	112M4	22000	8161
24.6	1397	1.2	58.50	B103	112MA4	22000	8175
24.6	1399	3.6	59.02	B143	112M4	38939	38939
24.5	1354	1.9	119.60	B123	112M2	30000	11471
24.4	1407	2.3	59.36	B123	112M4	30000	11414
24.4	1409	3.5	59.02	B143	112MA4	39007	39007
24.3	1417	2.3	59.36	B123	112MA4	30000	11431
24.2	1368	1.9	119.60	B123	112MA2	30000	11498
24.0	1383	1.9	119.60	B123	100LB2	30000	11525
23.8	1457	3.5	40.29	B143	132MA6	39195	39195
23.7	1466	2.0	40.53	B123	132MA6	30000	11472
23.5	1411	2.7	124.62	B143	112M2	39536	39536

5.1 B/BA MOTORIDUTTORE (50Hz)

4.00 kW

n2 [rpm]	M2 [Nm]	fs	i	Riduttore	Motore	Fr2 D-S-P [N]	Fr2 C [N]
23.3	1487	1.2	41.12	B103	132MA6	22000	8265
23.3	1426	2.6	124.62	B143	112MA2	39639	39639
23.2	1484	2.2	62.59	B123	112M4	30000	11547
23.0	1494	2.2	62.59	B123	112MA4	30000	11564
23.0	1441	2.6	124.62	B143	100LB2	39744	39744
22.5	1472	1.8	129.96	B123	112M2	30000	11685
22.3	1538	1.1	64.89	B103	112M4	22000	8360
22.3	1487	1.8	129.96	B123	112MA2	30000	11712
22.3	1538	3.3	64.88	B143	112M4	39874	39874
22.2	1549	1.1	64.89	B103	112MA4	22000	8374
22.2	1549	3.2	64.88	B143	112MA4	39942	39942
22.1	1502	1.7	129.96	B123	100LB2	30000	11738
21.7	1597	3.2	44.16	B143	132MA6	40000	40000
21.5	1614	1.1	44.61	B103	132MA6	22000	8419
21.5	1545	2.4	136.44	B143	112M2	40000	40000
21.4	1624	1.9	44.89	B123	132MA6	30000	11725
21.3	1561	2.4	136.44	B143	112MA2	40000	40000
21.1	1626	1.0	68.58	B103	112M4	22000	8466
21.0	1637	1.0	68.58	B103	112MA4	22000	8479
21.0	1577	2.4	136.44	B143	100LB2	40000	40000
20.9	1646	2.0	69.43	B123	112M4	30000	11804
20.7	1658	2.0	69.43	B123	112MA4	30000	11821
20.6	1670	3.0	70.43	B143	112M4	40000	40000
20.4	1682	3.0	70.43	B143	112MA4	40000	40000
20.3	1710	1.0	47.28	B103	132MA6	22000	8529
20.3	1635	1.6	144.43	B123	112M2	30000	11953
20.1	1652	1.6	144.43	B123	112MA2	30000	11978
19.9	1725	1.0	72.76	B103	112M4	22000	8578
19.9	1670	1.6	144.43	B123	100LB2	30000	12004
19.9	1749	3.0	48.35	B143	132MA6	40000	40000
19.8	1737	1.0	72.76	B103	112MA4	22000	8591
19.6	1694	2.2	149.59	B143	112M2	40000	40000
19.5	1764	2.0	74.42	B123	112M4	30000	11972
19.4	1777	2.0	74.42	B123	112MA4	30000	11989
19.4	1711	2.2	149.59	B143	112MA2	40000	40000
19.3	1801	1.9	49.80	B123	132MA6	30000	11975
19.2	1729	2.2	149.59	B143	100LB2	40000	40000
19.1	1817	1.0	50.24	B103	132MA6	22000	8642
18.8	1828	2.7	77.12	B143	112M4	40000	40000
18.7	1841	2.7	77.12	B143	112MA4	40000	40000
18.4	1871	0.9	78.92	B103	112M4	22000	8730
18.3	1814	1.4	160.23	B123	112M2	30000	12209
18.2	1884	0.9	78.92	B103	112MA4	22000	8742
18.1	1918	0.9	53.02	B103	132MA6	22000	8741
18.1	1833	1.4	160.23	B123	112MA2	30000	12234

5.1 B/BA MOTORIDUTTORE (50Hz)

4.00 kW

n2 [rpm]	M2 [Nm]	fs	i	Riduttore	Motore	Fr2 D-S-P [N]	Fr2 C [N]
18.1	1898	1.8	80.04	B123	112M4	30000	12145
18.1	1923	2.7	53.16	B143	132MA6	40000	40000
18.0	1911	1.8	80.04	B123	112MA4	30000	12161
17.9	1852	1.4	160.23	B123	100LB2	30000	12259
17.7	1964	1.7	54.30	B123	132MA6	30000	12176
17.6	1976	2.7	54.63	B143	132MA6	40000	40000
17.6	1886	2.0	166.53	B143	112M2	40000	40000
17.4	1905	2.0	166.53	B143	112MA2	40000	40000
17.3	1984	0.9	83.66	B103	112M4	22000	8837
17.2	1997	0.9	83.66	B103	112MA4	22000	8849
17.2	1925	1.9	166.53	B143	100LB2	40000	40000
17.0	2028	2.5	85.54	B143	112M4	40000	40000
16.8	2042	2.4	85.54	B143	112MA4	40000	40000
16.3	2135	2.5	59.02	B143	132MA6	40000	40000
16.2	2043	1.3	180.40	B123	112M2	30000	12492
16.2	2147	1.6	59.36	B123	132MA6	30000	12376
16.1	2131	1.6	89.87	B123	112M4	30000	12409
16.1	2064	1.3	180.40	B123	112MA2	30000	12515
16.0	2146	1.6	89.87	B123	112MA4	30000	12424
15.9	2085	1.3	180.40	B123	100LB2	30000	12539
15.8	2204	3.8	60.92	B153	132MA6	65000	65000
15.6	2120	1.8	187.24	B143	112M2	40000	40000
15.5	2142	1.8	187.24	B143	112MA2	40000	40000
15.4	2232	2.2	94.13	B143	112M4	40000	40000
15.3	2264	1.5	62.59	B123	132MA6	30000	12490
15.3	2247	2.2	94.13	B143	112MA4	40000	40000
15.3	2164	1.7	187.24	B143	100LB2	40000	40000
15.1	2296	3.7	63.47	B153	132MA6	65000	65000
14.8	2347	2.2	64.88	B143	132MA6	40000	40000
14.5	2364	1.5	99.70	B123	112M4	30000	12633
14.4	2380	1.5	99.70	B123	112MA4	30000	12647
13.8	2511	1.4	69.43	B123	132MA6	30000	12704
13.7	2509	2.0	105.83	B143	112M4	40000	40000
13.6	2529	1.4	106.65	B123	112M4	30000	12770
13.6	2527	2.0	105.83	B143	112MA4	40000	40000
13.6	2548	2.1	70.43	B143	132MA6	40000	40000
13.5	2546	1.4	106.65	B123	112MA4	30000	12784
13.5	2573	3.3	71.15	B153	132MA6	65000	65000
13.0	2654	1.9	111.94	B143	112M4	40000	40000
12.9	2692	1.4	74.42	B123	132MA6	30000	12838
12.9	2673	1.9	111.94	B143	112MA4	40000	40000
12.4	2789	1.9	77.12	B143	132MA6	40000	40000
12.4	2793	3.0	77.22	B153	132MA6	65000	65000
12.1	2836	1.2	119.60	B123	112M4	30000	12987
12.0	2895	1.3	80.04	B123	132MA6	30000	12969

5.1 B/BA MOTORIDUTTORE (50Hz)

4.00 kW

n2 [rpm]	M2 [Nm]	fs	i	Riduttore	Motore	Fr2 D-S-P [N]	Fr2 C [N]
12.0	2855	1.2	119.60	B123	112MA4	30000	13000
11.6	2955	1.7	124.62	B143	112M4	40000	40000
11.6	2975	1.7	124.62	B143	112MA4	40000	40000
11.4	3034	2.8	83.89	B153	132MA6	65000	65000
11.2	3081	1.1	129.96	B123	112M4	30000	13129
11.2	3094	1.7	85.54	B143	132MA6	40000	40000
11.1	3103	1.1	129.96	B123	112MA4	30000	13140
11.0	3170	2.6	87.65	B153	132MA6	65000	65000
10.7	3251	1.1	89.87	B123	132MA6	30000	13155
10.6	3235	1.5	136.44	B143	112M4	40000	40000
10.6	3257	1.5	136.44	B143	112MA4	40000	40000
10.3	3366	2.5	93.05	B153	132MA6	65000	65000
10.2	3405	1.5	94.13	B143	132MA6	40000	40000
10.0	3424	1.0	144.43	B123	112M4	30000	13287
10.0	3448	1.0	144.43	B123	112MA4	30000	13297
9.7	3547	1.4	149.59	B143	112M4	40000	40000
9.6	3606	1.0	99.70	B123	132MA6	30000	13296
9.6	3571	1.4	149.59	B143	112MA4	40000	40000
9.3	3730	2.3	103.12	B153	132MA6	65000	65000
9.1	3828	1.4	105.83	B143	132MA6	40000	40000
9.0	3858	1.0	106.65	B123	132MA6	30000	13371
9.0	3799	0.9	160.23	B123	112M4	30000	13415
9.0	3825	0.9	160.23	B123	112MA4	30000	13423
8.7	3949	1.3	166.53	B143	112M4	40000	40000
8.6	4049	1.3	111.94	B143	132MA6	40000	40000
8.6	3976	1.3	166.53	B143	112MA4	40000	40000
7.7	4507	1.2	124.62	B143	132MA6	40000	40000
7.7	4439	1.1	187.24	B143	112M4	40000	40000
7.7	4470	1.1	187.24	B143	112MA4	40000	40000
7.7	4481	1.9	123.88	B153	132MA6	65000	65000
7.2	4856	1.7	134.27	B153	132MA6	65000	65000
7.0	4935	1.1	136.44	B143	132MA6	40000	40000
6.4	5411	1.0	149.59	B143	132MA6	40000	40000
6.4	5399	1.6	149.26	B153	132MA6	65000	65000
5.8	5983	1.4	165.42	B153	132MA6	65000	65000

4.80 kW

n2 [rpm]	M2 [Nm]	fs	i	Riduttore	Motore	Fr2 D-S-P [N]	Fr2 C [N]
250.2	165	1.8	5.71	B063	112MB4	7541	2155
207.9	198	1.7	6.88	B063	112MB4	7912	2261
195.3	211	1.7	7.32	B063	112MB4	8038	2297
183.1	225	2.2	7.81	B083	112MB4	12993	3712
176.0	234	3.4	8.13	B103	112MB4	16375	4678

5.1 B/BA MOTORIDUTTORE (50Hz)

4.80 kW

n2 [rpm]	M2 [Nm]	fs	i	Riduttore	Motore	Fr2 D-S-P [N]	Fr2 C [N]
171.1	255	1.4	8.36	BA72	112MB4	5043	2522
165.8	249	2.4	8.62	B083	112MB4	13361	3817
159.5	259	3.5	8.97	B103	112MB4	16868	4819
156.1	264	1.7	9.16	B063	112MB4	8488	2425
142.2	306	1.1	10.06	BA72	112MB4	5365	2682
139.3	296	1.8	10.26	B063	112MB4	8714	2490
136.3	303	2.1	10.49	B083	112MB4	14104	4030
130.9	315	3.2	10.92	B103	112MB4	17889	5111
129.7	318	1.7	11.03	B063	112MB4	8856	2530
123.4	334	2.2	11.59	B083	112MB4	14486	4139
118.7	348	2.9	12.05	B103	112MB4	18416	5262
115.7	356	1.6	12.35	B063	112MB4	9076	2593
114.9	379	0.9	12.44	BA72	112MB4	5759	2879
108.7	379	1.6	13.15	B063	112MB4	9195	2627
99.1	416	1.9	14.43	B083	112MB4	15343	4384
95.9	454	0.9	14.91	BA72	112MB4	6116	3058
95.4	432	2.8	14.99	B103	112MB4	19621	5606
94.2	438	1.3	15.18	B063	112MB4	9459	2703
86.2	479	1.8	16.60	B083	112MB4	15895	4541
84.1	491	1.2	17.00	B063	112MB4	9659	2760
82.8	498	2.8	17.27	B103	112MB4	20431	5837
78.0	529	1.6	18.32	B083	112MB4	16286	4653
75.0	550	2.5	19.06	B103	112MB4	21005	6001
63.9	646	0.9	22.39	B063	112MB4	10086	2882
62.7	658	1.3	22.82	B083	112MB4	17144	4898
60.3	684	2.0	23.70	B103	112MB4	22000	6373
55.2	747	3.7	25.89	B123	112MB4	30000	9151
53.9	765	2.0	26.51	B103	112MB4	22000	6568
53.5	771	1.1	26.71	B083	112MB4	17747	5071
48.5	851	1.0	29.50	B083	112MB4	18000	5176
46.8	882	1.8	30.55	B103	112MB4	22000	6817
45.7	902	3.1	31.26	B123	112MB4	30000	9598
45.0	917	0.9	31.80	B083	112MB4	18000	5254
43.2	954	1.8	33.07	B103	112MB4	22000	6956
41.2	1001	2.8	34.68	B123	112MB4	30000	9844
39.9	1035	1.6	35.87	B103	112MB4	22000	7101
35.3	1169	2.4	40.53	B123	112MB4	30000	10211
34.8	1186	1.4	41.12	B103	112MB4	22000	7343
32.4	1274	3.8	44.16	B143	112MB4	35559	35559
32.1	1287	1.3	44.61	B103	112MB4	22000	7487
31.9	1295	2.3	44.89	B123	112MB4	30000	10449
30.2	1364	1.2	47.28	B103	112MB4	22000	7589
29.6	1395	3.6	48.35	B143	112MB4	36376	36376
28.7	1437	2.2	49.80	B123	112MB4	30000	10686
28.5	1449	1.2	50.24	B103	112MB4	22000	7695

5.1 B/BA MOTORIDUTTORE (50Hz)

4.80 kW

n2 [rpm]	M2 [Nm]	fs	i	Riduttore	Motore	Fr2 D-S-P [N]	Fr2 C [N]
27.0	1530	1.1	53.02	B103	112MB4	22000	7789
26.9	1534	3.3	53.16	B143	112MB4	37231	37231
26.3	1567	2.0	54.30	B123	112MB4	30000	10880
26.2	1576	3.2	54.63	B143	112MB4	37477	37477
24.4	1688	1.0	58.50	B103	112MB4	22000	7957
24.2	1703	2.9	59.02	B143	112MB4	38170	38170
24.1	1712	1.9	59.36	B123	112MB4	30000	11074
22.8	1806	1.8	62.59	B123	112MB4	30000	11186
22.0	1872	0.9	64.89	B103	112MB4	22000	8131
22.0	1872	2.7	64.88	B143	112MB4	39016	39016
20.6	2003	1.6	69.43	B123	112MB4	30000	11400
20.3	2032	2.5	70.43	B143	112MB4	39740	39740
19.2	2147	1.6	74.42	B123	112MB4	30000	11535
18.5	2225	2.2	77.12	B143	112MB4	40000	40000
17.9	2309	1.5	80.04	B123	112MB4	30000	11672
16.7	2468	2.0	85.54	B143	112MB4	40000	40000
15.9	2593	1.3	89.87	B123	112MB4	30000	11872
15.2	2716	1.8	94.13	B143	112MB4	40000	40000
14.3	2876	1.2	99.70	B123	112MB4	30000	12032
13.5	3053	1.6	105.83	B143	112MB4	40000	40000
13.4	3077	1.1	106.65	B123	112MB4	30000	12124
12.8	3229	1.5	111.94	B143	112MB4	40000	40000
12.0	3450	1.0	119.60	B123	112MB4	30000	12257
11.5	3595	1.4	124.62	B143	112MB4	40000	40000
11.0	3749	0.9	129.96	B123	112MB4	30000	12331
10.5	3936	1.3	136.44	B143	112MB4	40000	40000
9.6	4316	1.2	149.59	B143	112MB4	40000	40000
8.6	4804	1.0	166.53	B143	112MB4	40000	40000
7.6	5402	0.9	187.24	B143	112MB4	40000	40000

5.50 kW

n2 [rpm]	M2 [Nm]	fs	i	Riduttore	Motore	Fr2 D-S-P [N]	Fr2 C [N]
423.0	108	2.4	6.88	B063	112MB2	6480	1851
397.4	115	2.3	7.32	B063	112MB2	6594	1884
377.7	121	3.1	7.81	B083	132S2	10461	2989
372.6	122	3.1	7.81	B083	112MB2	10503	3001
372.6	122	3.1	7.81	B083	132SA2	10503	3001
348.2	138	1.9	8.36	BA72	112MB2	3980	1990
342.1	133	3.4	8.62	B083	132S2	10774	3078
337.5	135	3.3	8.62	B083	112MB2	10817	3091
337.5	135	3.3	8.62	B083	132SA2	10817	3091
289.3	166	1.6	10.06	BA72	112MB2	4233	2117
281.1	162	3.0	10.49	B083	132S2	11414	3261

5.1 B/BA MOTORIDUTTORE (50Hz)

5.50 kW

n2 [rpm]	M2 [Nm]	fs	i	Riduttore	Motore	Fr2 D-S-P [N]	Fr2 C [N]
277.3	165	3.0	10.49	B083	112MB2	11460	3274
277.3	165	3.0	10.49	B083	132SA2	11460	3274
263.9	173	2.3	11.03	B063	112MB2	7361	2103
254.6	179	3.1	11.59	B083	132S2	11747	3356
251.1	182	3.1	11.59	B083	112MB2	11793	3370
251.1	182	3.1	11.59	B083	132SA2	11793	3370
241.5	189	4.0	12.05	B103	112MB2	14814	4233
241.5	189	4.0	12.05	B103	132SA2	14814	4233
233.9	206	1.3	12.44	BA72	112MB2	4544	2272
221.3	206	2.1	13.15	B063	112MB2	7698	2199
204.4	223	2.7	14.43	B083	132S2	12505	3573
201.7	226	2.7	14.43	B083	112MB2	12554	3587
201.7	226	2.7	14.43	B083	132SA2	12554	3587
196.9	232	3.9	14.99	B103	132S2	15763	4504
195.2	247	1.3	14.91	BA72	112MB2	4826	2413
194.2	235	3.8	14.99	B103	112MB2	15828	4522
194.2	235	3.8	14.99	B103	132SA2	15828	4522
191.8	238	1.9	15.18	B063	112MB2	7972	2278
188.2	251	2.0	7.81	B083	132MS4	12763	3646
185.7	255	2.0	7.81	B083	132S4	12811	3660
180.9	261	3.1	8.13	B103	132MS4	16143	4612
178.4	265	3.0	8.13	B103	132S4	16209	4631
177.8	257	2.5	16.60	B083	132S2	13003	3715
175.4	260	2.5	16.60	B083	112MB2	13052	3729
175.4	260	2.5	16.60	B083	132SA2	13052	3729
171.2	267	1.7	17.00	B063	112MB2	8188	2339
170.8	267	3.9	17.27	B103	132S2	16449	4700
170.5	277	2.2	8.62	B083	132MS4	13115	3747
168.5	271	3.9	17.27	B103	112MB2	16516	4719
168.5	271	3.9	17.27	B103	132SA2	16516	4719
168.2	281	2.1	8.62	B083	132S4	13164	3761
163.9	288	3.1	8.97	B103	132MS4	16623	4749
162.2	297	1.1	17.94	BA72	112MB2	5134	2567
161.7	292	3.1	8.97	B103	132S4	16690	4769
161.0	283	2.2	18.32	B083	132S2	13362	3818
158.8	287	2.2	18.32	B083	112MB2	13412	3832
158.8	287	2.2	18.32	B083	132SA2	13412	3832
154.8	295	3.6	19.06	B103	132S2	16937	4839
152.7	299	3.5	19.06	B103	112MB2	17006	4859
152.7	299	3.5	19.06	B103	132SA2	17006	4859
140.1	337	1.9	10.49	B083	132MS4	13825	3950
138.2	342	1.9	10.49	B083	132S4	13875	3964
134.6	351	2.8	10.92	B103	132MS4	17615	5033
132.8	356	2.8	10.92	B103	132S4	17685	5053
130.0	351	1.3	22.39	B063	112MB2	8700	2486

5.1 B/BA MOTORIDUTTORE (50Hz)

5.50 kW

n2 [rpm]	M2 [Nm]	fs	i	Riduttore	Motore	Fr2 D-S-P [N]	Fr2 C [N]
129.3	353	1.8	22.82	B083	132S2	14170	4049
127.5	358	1.8	22.82	B083	112MB2	14221	4063
127.5	358	1.8	22.82	B083	132SA2	14221	4063
126.9	373	2.0	11.59	B083	132MS4	14187	4054
125.1	378	2.0	11.59	B083	132S4	14238	4068
124.5	366	2.9	23.70	B103	132S2	18058	5159
122.9	388	1.4	7.81	B083	132MB6	14288	4082
122.8	372	2.8	23.70	B103	112MB2	18130	5180
122.8	372	2.8	23.70	B103	132SA2	18130	5180
122.0	388	2.6	12.05	B103	132MS4	18125	5179
120.5	396	4.0	7.97	B123	132MB6	25591	7312
120.3	393	2.5	12.05	B103	132S4	18197	5199
118.1	404	2.1	8.13	B103	132MB6	18283	5224
111.5	409	1.1	26.09	B063	112MB2	8971	2563
111.3	429	1.5	8.62	B083	132MB6	14651	4186
111.3	410	2.7	26.51	B103	132S2	18654	5330
110.4	413	1.5	26.71	B083	132S2	14759	4217
109.8	416	2.7	26.51	B103	112MB2	18727	5351
109.8	416	2.7	26.51	B103	132SA2	18727	5351
108.9	419	1.5	26.71	B083	112MB2	14810	4231
108.9	419	1.5	26.71	B083	132SA2	14810	4231
107.1	446	2.1	8.97	B103	132MB6	18804	5373
103.8	439	1.0	28.03	B063	112MB2	9093	2598
101.9	464	1.7	14.43	B083	132MS4	14996	4285
100.5	470	1.7	14.43	B083	132S4	15046	4299
100.0	456	1.4	29.50	B083	132S2	15131	4323
99.8	478	4.0	9.62	B123	132MB6	26973	7707
98.7	462	1.4	29.50	B083	112MB2	15182	4338
98.7	462	1.4	29.50	B083	132SA2	15182	4338
98.1	482	2.5	14.99	B103	132MS4	19289	5511
96.8	489	2.5	14.99	B103	132S4	19364	5532
96.5	472	2.5	30.55	B103	132S2	19425	5550
95.2	479	2.5	30.55	B103	112MB2	19500	5571
95.2	479	2.5	30.55	B103	132SA2	19500	5571
92.8	492	1.3	31.80	B083	132S2	15413	4404
91.5	498	1.3	31.80	B083	112MB2	15464	4418
91.5	498	1.3	31.80	B083	132SA2	15464	4418
91.5	522	1.3	10.49	B083	132MB6	15372	4392
89.2	511	2.5	33.07	B103	132S2	19862	5675
88.6	534	1.6	16.60	B083	132MS4	15511	4432
88.0	518	2.5	33.07	B103	112MB2	19938	5697
88.0	518	2.5	33.07	B103	132SA2	19938	5697
87.9	543	1.9	10.92	B103	132MB6	19875	5678
87.4	541	1.6	16.60	B083	132S4	15561	4446
85.5	533	1.2	34.49	B083	132S2	15718	4491

5.1 B/BA MOTORIDUTTORE (50Hz)

5.50 kW

n2 [rpm]	M2 [Nm]	fs	i	Riduttore	Motore	Fr2 D-S-P [N]	Fr2 C [N]
85.1	555	2.5	17.27	B103	132MS4	20069	5734
85.1	536	3.9	34.68	B123	132S2	28287	8082
84.4	541	1.2	34.49	B083	112MB2	15769	4505
84.4	541	1.2	34.49	B083	132SA2	15769	4505
84.0	563	2.5	17.27	B103	132S4	20145	5756
83.9	544	3.9	34.68	B123	112MB2	28392	8112
83.9	544	3.9	34.68	B123	132SA2	28392	8112
82.9	576	1.4	11.59	B083	132MB6	15733	4495
82.2	555	2.3	35.87	B103	132S2	20318	5805
81.1	562	2.3	35.87	B103	112MB2	20395	5827
81.1	562	2.3	35.87	B103	132SA2	20395	5827
80.2	589	1.4	18.32	B083	132MS4	15874	4535
79.7	599	1.8	12.05	B103	132MB6	20421	5834
79.1	597	1.4	18.32	B083	132S4	15923	4550
79.1	597	3.7	18.58	B123	132MS4	28748	8214
78.1	606	3.6	18.58	B123	132S4	28852	8244
77.1	613	2.3	19.06	B103	132MS4	20619	5891
76.9	621	3.4	12.48	B123	132MB6	28936	8267
76.1	621	2.3	19.06	B103	132S4	20696	5913
74.5	612	1.0	39.60	B083	132S2	16232	4638
73.5	621	1.0	39.60	B083	112MB2	16282	4652
73.5	621	1.0	39.60	B083	132SA2	16282	4652
72.8	627	3.4	40.53	B123	132S2	29494	8427
71.8	635	3.3	40.53	B123	112MB2	29601	8457
71.8	635	3.3	40.53	B123	132SA2	29601	8457
71.7	636	2.0	41.12	B103	132S2	21095	6027
71.3	663	3.8	20.61	B123	132MS4	29545	8441
70.8	645	2.0	41.12	B103	112MB2	21174	6050
70.8	645	2.0	41.12	B103	132SA2	21174	6050
70.4	672	3.7	20.61	B123	132S4	29651	8472
69.3	689	3.2	13.84	B123	132MB6	29732	8495
66.5	718	1.2	14.43	B083	132MB6	16517	4719
66.1	690	1.8	44.61	B103	132S2	21564	6161
65.7	694	3.2	44.89	B123	132S2	30000	8656
65.2	699	1.8	44.61	B103	112MB2	21643	6184
65.2	699	1.8	44.61	B103	132SA2	21643	6184
64.8	704	3.2	44.89	B123	112MB2	30000	8686
64.8	704	3.2	44.89	B123	132SA2	30000	8686
64.5	733	3.8	22.78	B123	132MS4	30000	8663
64.4	734	1.2	22.82	B083	132MS4	16659	4760
64.1	745	1.7	14.99	B103	132MB6	21653	6187
63.7	743	3.8	22.78	B123	132S4	30000	8693
63.5	744	1.1	22.82	B083	132S4	16707	4774
62.4	731	1.7	47.28	B103	132S2	21902	6258
62.4	765	2.9	15.38	B123	132MB6	30000	8727

5.1 B/BA MOTORIDUTTORE (50Hz)

5.50 kW

n2 [rpm]	M2 [Nm]	fs	i	Riduttore	Motore	Fr2 D-S-P [N]	Fr2 C [N]
62.0	762	1.8	23.70	B103	132MS4	21859	6245
61.5	741	1.7	47.28	B103	112MB2	21982	6280
61.5	741	1.7	47.28	B103	132SA2	21982	6280
61.2	773	1.8	23.70	B103	132S4	21938	6268
59.2	770	3.1	49.80	B123	132S2	30000	8889
58.7	777	1.6	50.24	B103	132S2	22000	6359
58.4	781	3.1	49.80	B123	112MB2	30000	8920
58.4	781	3.1	49.80	B123	132SA2	30000	8920
57.9	788	1.6	50.24	B103	112MB2	22000	6382
57.9	788	1.6	50.24	B103	132SA2	22000	6382
57.8	825	1.1	16.60	B083	132MB6	16999	4857
56.8	833	3.4	25.89	B123	132MS4	30000	8946
56.3	848	4.0	17.04	B143	132MB6	30302	30302
56.0	844	3.3	25.89	B123	132S4	30000	8977
55.6	820	1.6	53.02	B103	132S2	22000	6449
55.6	859	1.7	17.27	B103	132MB6	22000	6419
55.4	853	1.8	26.51	B103	132MS4	22000	6430
55.0	859	1.0	26.71	B083	132MS4	17201	4914
54.9	831	1.5	53.02	B103	112MB2	22000	6472
54.9	831	1.5	53.02	B103	132SA2	22000	6472
54.7	864	1.7	26.51	B103	132S4	22000	6453
54.3	871	1.0	26.71	B083	132S4	17246	4928
54.3	840	2.9	54.30	B123	132S2	30000	9084
53.6	851	2.8	54.30	B123	112MB2	30000	9115
53.6	851	2.8	54.30	B123	132SA2	30000	9115
53.4	885	3.2	27.51	B123	132MS4	30000	9081
52.7	897	3.1	27.51	B123	132S4	30000	9112
52.4	911	1.0	18.32	B083	132MB6	17327	4951
51.7	924	2.5	18.58	B123	132MB6	30000	9143
50.4	905	1.4	58.50	B103	132S2	22000	6614
50.4	948	1.6	19.06	B103	132MB6	22000	6581
49.7	917	1.4	58.50	B103	112MB2	22000	6637
49.7	917	1.4	58.50	B103	132SA2	22000	6637
49.7	918	2.6	59.36	B123	132S2	30000	9286
49.0	930	2.6	59.36	B123	112MB2	30000	9316
49.0	930	2.6	59.36	B123	132SA2	30000	9316
48.1	983	1.6	30.55	B103	132MS4	22000	6665
47.7	990	2.8	30.79	B123	132MS4	30000	9331
47.5	996	1.6	30.55	B103	132S4	22000	6688
47.1	1004	2.8	30.79	B123	132S4	30000	9361
47.1	968	2.6	62.59	B123	132S2	30000	9405
47.0	1005	2.8	31.26	B123	132MS4	30000	9364
46.6	1025	2.6	20.61	B123	132MB6	30000	9372
46.5	981	2.5	62.59	B123	112MB2	30000	9436
46.5	981	2.5	62.59	B123	132SA2	30000	9436

5.1 B/BA MOTORIDUTTORE (50Hz)

5.50 kW

n2 [rpm]	M2 [Nm]	fs	i	Riduttore	Motore	Fr2 D-S-P [N]	Fr2 C [N]
46.4	1019	2.7	31.26	B123	132S4	30000	9395
45.5	1003	1.3	64.89	B103	132S2	22000	6789
45.5	1003	3.7	64.88	B143	132S2	32224	32224
44.9	1017	3.7	64.88	B143	112MB2	32340	32340
44.9	1017	3.7	64.88	B143	132SA2	32340	32340
44.8	1017	1.3	64.89	B103	112MB2	22000	6812
44.8	1017	1.3	64.89	B103	132SA2	22000	6812
44.5	1063	1.6	33.07	B103	132MS4	22000	6796
43.9	1078	1.6	33.07	B103	132S4	22000	6819
43.0	1060	1.2	68.58	B103	132S2	22000	6882
42.5	1074	2.3	69.43	B123	132S2	30000	9638
42.4	1075	1.2	68.58	B103	112MB2	22000	6905
42.4	1075	1.2	68.58	B103	132SA2	22000	6905
42.4	1115	2.5	34.68	B123	132MS4	30000	9592
42.1	1133	2.6	22.78	B123	132MB6	30000	9590
41.9	1088	2.3	69.43	B123	112MB2	30000	9669
41.9	1088	2.3	69.43	B123	132SA2	30000	9669
41.9	1089	3.4	70.43	B143	132S2	32923	32923
41.8	1131	2.5	34.68	B123	132S4	30000	9622
41.3	1104	3.4	70.43	B143	112MB2	33040	33040
41.3	1104	3.4	70.43	B143	132SA2	33040	33040
41.0	1153	1.5	35.87	B103	132MS4	22000	6931
40.5	1179	1.2	23.70	B103	132MB6	22000	6941
40.5	1125	1.1	72.76	B103	132S2	22000	6982
40.4	1169	1.5	35.87	B103	132S4	22000	6954
40.0	1141	1.1	72.76	B103	112MB2	22000	7005
40.0	1141	1.1	72.76	B103	132SA2	22000	7005
39.6	1151	2.3	74.42	B123	132S2	30000	9793
39.1	1167	2.3	74.42	B123	112MB2	30000	9823
39.1	1167	2.3	74.42	B123	132SA2	30000	9823
38.3	1193	3.1	77.12	B143	132S2	33699	33699
37.7	1209	3.1	77.12	B143	112MB2	33816	33816
37.7	1209	3.1	77.12	B143	132SA2	33816	33816
37.5	1275	3.8	25.63	B143	132MB6	33697	33697
37.4	1220	1.0	78.92	B103	132S2	22000	7119
37.1	1288	2.3	25.89	B123	132MB6	30000	9865
36.9	1237	1.0	78.92	B103	112MB2	22000	7142
36.9	1237	1.0	78.92	B103	132SA2	22000	7142
36.9	1238	2.1	80.04	B123	132S2	30000	9953
36.5	1296	3.7	40.29	B143	132MS4	33960	33960
36.4	1255	2.1	80.04	B123	112MB2	30000	9983
36.4	1255	2.1	80.04	B123	132SA2	30000	9983
36.3	1303	2.1	40.53	B123	132MS4	30000	9929
36.2	1319	1.2	26.51	B103	132MB6	22000	7124
36.0	1314	3.7	40.29	B143	132S4	34076	34076

5.1 B/BA MOTORIDUTTORE (50Hz)

5.50 kW

n2 [rpm]	M2 [Nm]	fs	i	Riduttore	Motore	Fr2 D-S-P [N]	Fr2 C [N]
35.8	1321	2.1	40.53	B123	132S4	30000	9958
35.7	1322	1.3	41.12	B103	132MS4	22000	7156
35.3	1341	1.3	41.12	B103	132S4	22000	7178
35.3	1294	1.0	83.66	B103	132S2	22000	7217
35.0	1365	3.5	27.44	B143	132MB6	34272	34272
34.9	1368	2.1	27.51	B123	132MB6	30000	9993
34.8	1311	1.0	83.66	B103	112MB2	22000	7239
34.8	1311	1.0	83.66	B103	132SA2	22000	7239
34.5	1323	2.8	85.54	B143	132S2	34589	34589
34.0	1341	2.8	85.54	B143	112MB2	34706	34706
34.0	1341	2.8	85.54	B143	132SA2	34706	34706
33.3	1420	3.4	44.16	B143	132MS4	34734	34734
33.0	1435	1.2	44.61	B103	132MS4	22000	7288
32.8	1390	1.9	89.87	B123	132S2	30000	10205
32.8	1440	3.3	44.16	B143	132S4	34849	34849
32.7	1444	2.1	44.89	B123	132MS4	30000	10144
32.5	1454	1.2	44.61	B103	132S4	22000	7310
32.4	1409	1.9	89.87	B123	112MB2	30000	10234
32.4	1409	1.9	89.87	B123	132SA2	30000	10234
32.3	1464	2.0	44.89	B123	132S4	30000	10172
32.0	1494	3.3	30.05	B143	132MB6	35031	35031
31.4	1520	1.1	30.55	B103	132MB6	22000	7352
31.3	1456	2.6	94.13	B143	132S2	35409	35409
31.2	1531	1.9	30.79	B123	132MB6	30000	10225
31.1	1521	1.1	47.28	B103	132MS4	22000	7382
30.9	1476	2.5	94.13	B143	112MB2	35526	35526
30.9	1476	2.5	94.13	B143	132SA2	35526	35526
30.7	1542	1.1	47.28	B103	132S4	22000	7404
30.7	1555	1.9	31.26	B123	132MB6	30000	10256
30.4	1555	3.2	48.35	B143	132MS4	35496	35496
30.0	1576	3.2	48.35	B143	132S4	35611	35611
29.6	1542	1.7	99.70	B123	132S2	30000	10424
29.5	1602	2.0	49.80	B123	132MS4	30000	10356
29.3	1616	1.1	50.24	B103	132MS4	22000	7478
29.2	1563	1.7	99.70	B123	112MB2	30000	10453
29.2	1563	1.7	99.70	B123	132SA2	30000	10453
29.1	1624	2.0	49.80	B123	132S4	30000	10383
29.1	1642	3.0	33.01	B143	132MB6	35816	35816
29.0	1645	1.1	33.07	B103	132MB6	22000	7477
28.9	1638	1.0	50.24	B103	132S4	22000	7500
28.6	1595	3.8	103.12	B153	132S2	62916	62916
28.2	1616	3.7	103.12	B153	132SA2	63179	63179
27.9	1637	2.3	105.83	B143	132S2	36411	36411
27.7	1705	1.0	53.02	B103	132MS4	22000	7562
27.7	1649	1.6	106.65	B123	132S2	30000	10563

5.1 B/BA MOTORIDUTTORE (50Hz)

5.50 kW

n2 [rpm]	M2 [Nm]	fs	i	Riduttore	Motore	Fr2 D-S-P [N]	Fr2 C [N]
27.7	1725	1.7	34.68	B123	132MB6	30000	10461
27.7	1709	2.9	53.16	B143	132MS4	36288	36288
27.5	1659	2.3	105.83	B143	112MB2	36528	36528
27.5	1659	2.3	105.83	B143	132SA2	36528	36528
27.3	1729	1.0	53.02	B103	132S4	22000	7584
27.3	1672	1.6	106.65	B123	112MB2	30000	10591
27.3	1672	1.6	106.65	B123	132SA2	30000	10591
27.3	1733	2.9	53.16	B143	132S4	36402	36402
27.1	1746	1.8	54.30	B123	132MS4	30000	10527
26.9	1757	2.8	54.63	B143	132MS4	36515	36515
26.8	1784	1.0	35.87	B103	132MB6	22000	7603
26.7	1770	1.8	54.30	B123	132S4	30000	10553
26.5	1781	2.8	54.63	B143	132S4	36628	36628
26.4	1731	2.2	111.94	B143	132S2	36888	36888
26.2	1824	2.8	36.67	B143	132MB6	36686	36686
26.0	1755	2.1	111.94	B143	112MB2	37004	37004
26.0	1755	2.1	111.94	B143	132SA2	37004	37004
25.1	1881	0.9	58.50	B103	132MS4	22000	7713
24.9	1898	2.6	59.02	B143	132MS4	37153	37153
24.8	1909	1.7	59.36	B123	132MS4	30000	10695
24.7	1849	1.4	119.60	B123	132S2	30000	10791
24.6	1924	2.6	59.02	B143	132S4	37265	37265
24.4	1935	1.7	59.36	B123	132S4	30000	10721
24.3	1875	1.4	119.60	B123	112MB2	30000	10817
24.3	1875	1.4	119.60	B123	132SA2	30000	10817
23.8	2004	2.5	40.29	B143	132MB6	37452	37452
23.8	1916	3.1	123.88	B153	132S2	65000	65000
23.7	2016	1.5	40.53	B123	132MB6	30000	10750
23.7	1927	1.9	124.62	B143	132S2	37791	37791
23.5	2013	1.6	62.59	B123	132MS4	30000	10792
23.5	1942	3.1	123.88	B153	132SA2	65000	65000
23.4	1954	1.9	124.62	B143	112MB2	37905	37905
23.4	1954	1.9	124.62	B143	132SA2	37905	37905
23.2	2040	1.6	62.59	B123	132S4	30000	10816
23.2	2041	3.9	63.47	B153	132MS4	65000	65000
22.8	2069	3.9	63.47	B153	132S4	65000	65000
22.7	2010	1.3	129.96	B123	132S2	30000	10948
22.7	2086	2.4	64.88	B143	132MS4	37923	37923
22.7	2104	4.0	42.30	B153	132MB6	65000	65000
22.4	2037	1.3	129.96	B123	112MB2	30000	10973
22.4	2037	1.3	129.96	B123	132SA2	30000	10973
22.3	2115	2.4	64.88	B143	132S4	38034	38034
22.0	2076	2.9	134.27	B153	132S2	65000	65000
21.7	2196	2.3	44.16	B143	132MB6	38186	38186
21.7	2105	2.9	134.27	B153	132SA2	65000	65000

5.1 B/BA MOTORIDUTTORE (50Hz)

5.50 kW

n2 [rpm]	M2 [Nm]	fs	i	Riduttore	Motore	Fr2 D-S-P [N]	Fr2 C [N]
21.6	2110	1.8	136.44	B143	132S2	38542	38542
21.4	2233	1.4	44.89	B123	132MB6	30000	10925
21.3	2139	1.8	136.44	B143	112MB2	38654	38654
21.3	2139	1.8	136.44	B143	132SA2	38654	38654
21.2	2233	1.5	69.43	B123	132MS4	30000	10971
20.9	2264	1.5	69.43	B123	132S4	30000	10993
20.9	2265	2.2	70.43	B143	132MS4	38578	38578
20.7	2288	3.5	71.15	B153	132MS4	65000	65000
20.6	2296	2.2	70.43	B143	132S4	38686	38686
20.4	2233	1.2	144.43	B123	132S2	30000	11136
20.4	2319	3.4	71.15	B153	132S4	65000	65000
20.2	2364	3.6	47.53	B153	132MB6	65000	65000
20.1	2264	1.2	144.43	B123	112MB2	30000	11159
20.1	2264	1.2	144.43	B123	132SA2	30000	11159
19.9	2405	2.2	48.35	B143	132MB6	38893	38893
19.8	2393	1.5	74.42	B123	132MS4	30000	11082
19.8	2308	2.6	149.26	B153	132S2	65000	65000
19.7	2313	1.6	149.59	B143	132S2	39289	39289
19.5	2426	1.4	74.42	B123	132S4	30000	11103
19.5	2345	1.6	149.59	B143	112MB2	39398	39398
19.5	2345	1.6	149.59	B143	132SA2	39398	39398
19.5	2340	2.6	149.26	B153	132SA2	65000	65000
19.3	2477	1.4	49.80	B123	132MB6	30000	11087
19.1	2480	2.0	77.12	B143	132MS4	39283	39283
19.0	2515	3.3	50.56	B153	132MB6	65000	65000
19.0	2483	3.2	77.22	B153	132MS4	65000	65000
18.8	2514	2.0	77.12	B143	132S4	39388	39388
18.8	2518	3.2	77.22	B153	132S4	65000	65000
18.4	2574	1.4	80.04	B123	132MS4	30000	11191
18.4	2478	1.1	160.23	B123	132S2	30000	11305
18.2	2512	1.0	160.23	B123	112MB2	30000	11326
18.2	2512	1.0	160.23	B123	132SA2	30000	11326
18.1	2609	1.3	80.04	B123	132S4	30000	11210
18.1	2644	2.0	53.16	B143	132MB6	39610	39610
17.8	2558	2.3	165.42	B153	132S2	65000	65000
17.7	2701	1.2	54.30	B123	132MB6	30000	11209
17.7	2575	1.5	166.53	B143	132S2	40000	40000
17.6	2717	1.9	54.63	B143	132MB6	39811	39811
17.6	2718	3.1	54.64	B153	132MB6	65000	65000
17.6	2593	2.3	165.42	B153	132SA2	65000	65000
17.5	2611	1.4	166.53	B143	112MB2	40000	40000
17.5	2611	1.4	166.53	B143	132SA2	40000	40000
17.5	2698	3.0	83.89	B153	132MS4	65000	65000
17.3	2735	2.9	83.89	B153	132S4	65000	65000
17.2	2751	1.8	85.54	B143	132MS4	40000	40000

5.1 B/BA MOTORIDUTTORE (50Hz)

5.50 kW

n2 [rpm]	M2 [Nm]	fs	i	Riduttore	Motore	Fr2 D-S-P [N]	Fr2 C [N]
17.0	2789	1.8	85.54	B143	132S4	40000	40000
16.8	2848	2.9	57.27	B153	132MB6	65000	65000
16.8	2819	2.8	87.65	B153	132MS4	65000	65000
16.5	2858	2.8	87.65	B153	132S4	65000	65000
16.4	2890	1.2	89.87	B123	132MS4	30000	11343
16.3	2935	1.8	59.02	B143	132MB6	40000	40000
16.2	2952	1.1	59.36	B123	132MB6	30000	11318
16.1	2930	1.2	89.87	B123	132S4	30000	11360
15.8	2895	1.3	187.24	B143	132S2	40000	40000
15.8	3030	2.8	60.92	B153	132MB6	65000	65000
15.8	2992	2.7	93.05	B153	132MS4	65000	65000
15.6	3027	1.7	94.13	B143	132MS4	40000	40000
15.6	3033	2.6	93.05	B153	132S4	65000	65000
15.5	2935	1.3	187.24	B143	112MB2	40000	40000
15.5	2935	1.3	187.24	B143	132SA2	40000	40000
15.4	3069	1.6	94.13	B143	132S4	40000	40000
15.3	3113	1.1	62.59	B123	132MB6	30000	11375
15.1	3157	2.7	63.47	B153	132MB6	65000	65000
14.8	3227	1.6	64.88	B143	132MB6	40000	40000
14.7	3206	1.1	99.70	B123	132MS4	30000	11456
14.5	3250	1.1	99.70	B123	132S4	30000	11469
14.3	3316	2.4	103.12	B153	132MS4	65000	65000
14.1	3362	2.4	103.12	B153	132S4	65000	65000
13.9	3403	1.5	105.83	B143	132MS4	40000	40000
13.8	3453	1.0	69.43	B123	132MB6	30000	11467
13.8	3430	1.0	106.65	B123	132MS4	30000	11515
13.7	3450	1.4	105.83	B143	132S4	40000	40000
13.6	3477	1.0	106.65	B123	132S4	30000	11525
13.6	3503	1.5	70.43	B143	132MB6	40000	40000
13.5	3538	2.4	71.15	B153	132MB6	65000	65000
13.1	3600	1.4	111.94	B143	132MS4	40000	40000
13.0	3649	1.4	111.94	B143	132S4	40000	40000
12.9	3701	1.0	74.42	B123	132MB6	30000	11512
12.4	3835	1.4	77.12	B143	132MB6	40000	40000
12.4	3841	2.2	77.22	B153	132MB6	65000	65000
12.3	3846	0.9	119.60	B123	132MS4	30000	11585
12.2	3872	0.9	119.60	B123	132S4	30000	11588
12.0	3981	0.9	80.04	B123	132MB6	30000	11543
11.9	3984	2.0	123.88	B153	132MS4	65000	65000
11.8	4007	1.2	124.62	B143	132MS4	40000	40000
11.7	4039	2.0	123.88	B153	132S4	65000	65000
11.6	4063	1.2	124.62	B143	132S4	40000	40000
11.4	4172	2.0	83.89	B153	132MB6	65000	65000
11.2	4255	1.2	85.54	B143	132MB6	40000	40000
11.0	4359	1.9	87.65	B153	132MB6	65000	65000

5.1 B/BA MOTORIDUTTORE (50Hz)

5.50 kW

n2 [rpm]	M2 [Nm]	fs	i	Riduttore	Motore	Fr2 D-S-P [N]	Fr2 C [N]
10.9	4318	1.9	134.27	B153	132MS4	65000	65000
10.8	4388	1.1	136.44	B143	132MS4	40000	40000
10.8	4377	1.8	134.27	B153	132S4	65000	65000
10.6	4448	1.1	136.44	B143	132S4	40000	40000
10.3	4628	1.8	93.05	B153	132MB6	65000	65000
10.2	4681	1.1	94.13	B143	132MB6	40000	40000
9.8	4811	1.0	149.59	B143	132MS4	40000	40000
9.8	4800	1.7	149.26	B153	132MS4	65000	65000
9.7	4877	1.0	149.59	B143	132S4	40000	40000
9.7	4866	1.6	149.26	B153	132S4	65000	65000
9.3	5128	1.6	103.12	B153	132MB6	65000	65000
9.1	5263	1.0	105.83	B143	132MB6	40000	40000
8.9	5319	1.5	165.42	B153	132MS4	65000	65000
8.8	5355	0.9	166.53	B143	132MS4	40000	40000
8.8	5393	1.5	165.42	B153	132S4	65000	65000
8.7	5429	0.9	166.53	B143	132S4	40000	40000
8.6	5567	0.9	111.94	B143	132MB6	40000	40000
7.7	6161	1.4	123.88	B153	132MB6	65000	65000
7.2	6678	1.3	134.27	B153	132MB6	65000	65000
6.4	7423	1.1	149.26	B153	132MB6	65000	65000
5.8	8227	1.0	165.42	B153	132MB6	65000	65000

7.50 kW

n2 [rpm]	M2 [Nm]	fs	i	Riduttore	Motore	Fr2 D-S-P [N]	Fr2 C [N]
281.1	221	2.2	10.49	B083	132M2	11175	3193
277.3	224	2.2	10.49	B083	132SB2	11218	3205
270.1	230	3.3	10.92	B103	132M2	14138	4039
266.5	233	3.2	10.92	B103	132SB2	14196	4056
244.8	254	3.0	12.05	B103	132M2	14558	4159
241.5	258	2.9	12.05	B103	132SB2	14617	4176
196.9	316	2.8	14.99	B103	132M2	15520	4434
194.2	320	2.8	14.99	B103	132SB2	15582	4452
187.0	345	1.5	7.81	B083	132M4	12415	3547
185.7	347	1.4	7.81	B083	132MA4	12437	3553
179.6	359	2.2	8.13	B103	132M4	15901	4543
178.4	361	2.2	8.13	B103	132MA4	15932	4552
177.8	350	1.8	16.60	B083	132M2	12626	3607
175.4	355	1.8	16.60	B083	132SB2	12670	3620
170.8	364	2.9	17.27	B103	132M2	16169	4620
169.3	381	1.6	8.62	B083	132M4	12729	3637
168.5	369	2.8	17.27	B103	132SB2	16233	4638
168.2	383	1.6	8.62	B083	132MA4	12750	3643
162.8	396	2.3	8.97	B103	132M4	16353	4672

5.1 B/BA MOTORIDUTTORE (50Hz)

7.50 kW

n2 [rpm]	M2 [Nm]	fs	i	Riduttore	Motore	Fr2 D-S-P [N]	Fr2 C [N]
161.7	399	2.3	8.97	B103	132MA4	16385	4681
161.0	386	1.6	18.32	B083	132M2	12945	3699
158.8	392	1.6	18.32	B083	132SB2	12989	3711
154.8	402	2.6	19.06	B103	132M2	16629	4751
152.7	407	2.6	19.06	B103	132SB2	16694	4770
139.1	463	1.4	10.49	B083	132M4	13350	3814
138.2	467	1.4	10.49	B083	132MA4	13371	3820
133.7	482	2.1	10.92	B103	132M4	17280	4937
132.8	486	2.1	10.92	B103	132MA4	17313	4947
126.0	512	1.5	11.59	B083	132M4	13660	3903
125.1	515	1.5	11.59	B083	132MA4	13682	3909
124.5	500	2.1	23.70	B103	132M2	17675	5050
122.8	507	2.1	23.70	B103	132SB2	17741	5069
121.8	535	2.9	7.97	B123	160M6	24861	7103
121.2	532	1.9	12.05	B103	132M4	17753	5072
120.3	536	1.9	12.05	B103	132MA4	17786	5082
119.4	545	1.5	8.13	B103	160M6	17810	5089
117.0	551	3.6	12.48	B123	132M4	25149	7185
116.2	555	3.6	12.48	B123	132MA4	25194	7198
113.9	546	3.8	25.89	B123	132M2	25414	7261
112.4	553	3.8	25.89	B123	132SB2	25506	7287
111.3	559	2.0	26.51	B103	132M2	18225	5207
110.4	563	1.1	26.71	B083	132M2	14151	4043
109.8	567	2.0	26.51	B103	132SB2	18293	5226
108.9	571	1.1	26.71	B083	132SB2	14194	4055
108.2	602	1.6	8.97	B103	160M6	18287	5225
107.2	580	3.6	27.51	B123	132M2	25822	7378
105.8	588	3.6	27.51	B123	132SB2	25914	7404
105.5	611	3.4	13.84	B123	132M4	25837	7382
104.7	615	3.4	13.84	B123	132MA4	25882	7395
101.2	637	1.3	14.43	B083	132M4	14334	4095
100.8	646	2.9	9.62	B123	160M6	26105	7459
100.5	641	1.3	14.43	B083	132MA4	14354	4101
100.0	622	1.0	29.50	B083	132M2	14460	4131
98.7	631	1.0	29.50	B083	132SB2	14502	4143
97.4	662	1.8	14.99	B103	132M4	18819	5377
96.8	666	1.8	14.99	B103	132MA4	18853	5386
96.5	644	1.9	30.55	B103	132M2	18931	5409
95.8	649	3.2	30.79	B123	132M2	26584	7595
95.2	653	1.8	30.55	B103	132SB2	18999	5428
94.9	679	3.1	15.38	B123	132M4	26538	7582
94.5	658	3.2	30.79	B123	132SB2	26676	7622
94.4	659	3.2	31.26	B123	132M2	26687	7625
94.3	684	3.1	15.38	B123	132MA4	26583	7595
93.9	694	3.0	10.33	B123	160M6	26580	7594

5.1 B/BA MOTORIDUTTORE (50Hz)

7.50 kW

n2 [rpm]	M2 [Nm]	fs	i	Riduttore	Motore	Fr2 D-S-P [N]	Fr2 C [N]
93.1	668	3.1	31.26	B123	132SB2	26779	7651
89.2	697	1.8	33.07	B103	132M2	19327	5522
88.8	733	1.4	10.92	B103	160M6	19256	5502
88.0	733	1.2	16.60	B083	132M4	14746	4213
88.0	707	1.8	33.07	B103	132SB2	19396	5542
87.4	738	1.2	16.60	B083	132MA4	14765	4219
85.1	731	2.9	34.68	B123	132M2	27391	7826
84.5	763	1.8	17.27	B103	132M4	19522	5578
84.0	768	1.8	17.27	B103	132MA4	19556	5587
83.9	741	2.8	34.68	B123	132SB2	27484	7852
82.2	756	1.7	35.87	B103	132M2	19738	5639
81.1	767	1.7	35.87	B103	132SB2	19807	5659
80.5	809	1.3	12.05	B103	160M6	19743	5641
79.7	809	1.1	18.32	B083	132M4	15026	4293
79.1	815	1.0	18.32	B083	132MA4	15045	4298
78.6	820	2.7	18.58	B123	132M4	27795	7941
78.1	826	2.7	18.58	B123	132MA4	27840	7954
77.7	838	2.5	12.48	B123	160M6	27830	7952
76.6	841	1.7	19.06	B103	132M4	20012	5718
76.1	847	1.7	19.06	B103	132MA4	20046	5727
72.8	855	2.5	40.53	B123	132M2	28446	8128
71.8	866	2.4	40.53	B123	132SB2	28539	8154
71.7	867	1.5	41.12	B103	132M2	20430	5837
70.8	879	1.5	41.12	B103	132SB2	20500	5857
70.8	910	2.7	20.61	B123	132M4	28482	8138
70.4	916	2.7	20.61	B123	132MA4	28528	8151
70.1	929	2.4	13.84	B123	160M6	28513	8147
67.0	972	3.3	14.49	B143	160M6	28074	28074
66.8	931	3.9	44.16	B143	132M2	28230	28230
66.1	941	1.4	44.61	B103	132M2	20843	5955
65.9	944	3.8	44.16	B143	132SB2	28331	28331
65.7	947	2.4	44.89	B123	132M2	29134	8324
65.2	954	1.3	44.61	B103	132SB2	20912	5975
64.8	960	2.3	44.89	B123	132SB2	29226	8350
64.7	1006	1.3	14.99	B103	160M6	20823	5949
64.1	1006	2.8	22.78	B123	132M4	29140	8326
63.7	1013	2.8	22.78	B123	132MA4	29185	8338
63.1	1032	2.1	15.38	B123	160M6	29198	8342
62.4	997	1.3	47.28	B103	132M2	21138	6039
61.6	1046	1.3	23.70	B103	132M4	21096	6027
61.5	1011	1.3	47.28	B103	132SB2	21207	6059
61.2	1054	1.3	23.70	B103	132MA4	21130	6037
61.0	1020	3.7	48.35	B143	132M2	28896	28896
60.2	1034	3.6	48.35	B143	132SB2	28996	28996
59.2	1050	2.3	49.80	B123	132M2	29825	8521

5.1 B/BA MOTORIDUTTORE (50Hz)

7.50 kW

n2 [rpm]	M2 [Nm]	fs	i	Riduttore	Motore	Fr2 D-S-P [N]	Fr2 C [N]
58.7	1059	1.2	50.24	B103	132M2	21444	6127
58.4	1065	2.3	49.80	B123	132SB2	29915	8547
57.9	1074	1.2	50.24	B103	132SB2	21512	6146
56.9	1144	2.9	17.04	B143	160M6	29244	29244
56.4	1143	2.4	25.89	B123	132M4	29965	8561
56.2	1159	1.3	17.27	B103	160M6	21518	6148
56.0	1151	2.4	25.89	B123	132MA4	30000	8574
55.6	1118	1.1	53.02	B103	132M2	21714	6204
55.5	1121	3.3	53.16	B143	132M2	29594	29594
55.1	1171	1.3	26.51	B103	132M4	21648	6185
54.9	1133	1.1	53.02	B103	132SB2	21783	6224
54.7	1179	1.3	26.51	B103	132MA4	21682	6195
54.7	1136	3.3	53.16	B143	132SB2	29695	29695
54.3	1145	2.1	54.30	B123	132M2	30000	8683
54.0	1152	3.3	54.63	B143	132M2	29795	29795
53.6	1161	2.1	54.30	B123	132SB2	30000	8709
53.3	1168	3.2	54.63	B143	132SB2	29896	29896
53.2	1212	3.8	27.44	B143	132M4	29770	29770
53.1	1215	2.3	27.51	B123	132M4	30000	8671
52.8	1220	3.8	27.44	B143	132MA4	29819	29819
52.7	1223	2.3	27.51	B123	132MA4	30000	8683
52.2	1247	1.9	18.58	B123	160M6	30000	8684
52.0	1252	3.0	18.66	B143	160M6	29897	29897
50.9	1279	1.1	19.06	B103	160M6	21994	6284
50.4	1234	1.0	58.50	B103	132M2	22000	6344
50.0	1244	3.0	59.02	B143	132M2	30364	30364
49.7	1251	1.0	58.50	B103	132SB2	22000	6363
49.7	1252	1.9	59.36	B123	132M2	30000	8847
49.3	1262	3.0	59.02	B143	132SB2	30465	30465
49.0	1269	1.9	59.36	B123	132SB2	30000	8872
48.6	1327	3.5	30.05	B143	132M4	30424	30424
48.3	1336	3.5	30.05	B143	132MA4	30474	30474
47.8	1349	1.2	30.55	B103	132M4	22000	6381
47.5	1358	1.2	30.55	B103	132MA4	22000	6391
47.4	1360	2.1	30.79	B123	132M4	30000	8870
47.1	1383	1.9	20.61	B123	160M6	30000	8864
47.1	1369	2.0	30.79	B123	132MA4	30000	8882
47.1	1320	1.9	62.59	B123	132M2	30000	8943
46.7	1380	2.0	31.26	B123	132M4	30000	8896
46.5	1338	1.8	62.59	B123	132SB2	30000	8967
46.4	1390	2.0	31.26	B123	132MA4	30000	8908
46.2	1409	3.0	21.00	B143	160M6	30743	30743
45.5	1368	2.7	64.88	B143	132M2	31060	31060
44.9	1387	2.7	64.88	B143	132SB2	31160	31160
44.2	1460	1.2	33.07	B103	132M4	22000	6488

5.1 B/BA MOTORIDUTTORE (50Hz)

7.50 kW

n2 [rpm]	M2 [Nm]	fs	i	Riduttore	Motore	Fr2 D-S-P [N]	Fr2 C [N]
44.2	1457	3.2	33.01	B143	132M4	31099	31099
43.9	1470	1.2	33.07	B103	132MA4	22000	6497
43.9	1467	3.2	33.01	B143	132MA4	31149	31149
42.6	1529	1.9	22.78	B123	160M6	30000	9032
42.6	1529	3.0	22.77	B143	160M6	31320	31320
42.5	1464	1.7	69.43	B123	132M2	30000	9125
42.1	1531	1.8	34.68	B123	132M4	30000	9071
41.9	1484	1.7	69.43	B123	132SB2	30000	9149
41.9	1485	2.5	70.43	B143	132M2	31660	31660
41.8	1542	1.8	34.68	B123	132MA4	30000	9082
41.5	1500	4.0	71.15	B153	132M2	55533	55533
41.3	1506	2.5	70.43	B143	132SB2	31759	31759
40.9	1591	0.9	23.70	B103	160M6	22000	6575
40.9	1521	3.9	71.15	B153	132SB2	55763	55763
40.7	1584	1.1	35.87	B103	132M4	22000	6595
40.4	1595	1.1	35.87	B103	132MA4	22000	6604
39.8	1619	3.0	36.67	B143	132M4	31847	31847
39.6	1569	1.7	74.42	B123	132M2	30000	9243
39.5	1630	2.9	36.67	B143	132MA4	31895	31895
39.1	1591	1.7	74.42	B123	132SB2	30000	9266
38.3	1626	2.3	77.12	B143	132M2	32315	32315
38.2	1628	3.7	77.22	B153	132M2	56927	56927
37.8	1720	2.8	25.63	B143	160M6	32147	32147
37.7	1649	2.3	77.12	B143	132SB2	32413	32413
37.7	1651	3.6	77.22	B153	132SB2	57162	57162
37.5	1738	1.7	25.89	B123	160M6	30000	9234
36.9	1688	1.6	80.04	B123	132M2	30000	9362
36.4	1711	1.5	80.04	B123	132SB2	30000	9384
36.2	1779	2.7	40.29	B143	132M4	32504	32504
36.0	1790	1.6	40.53	B123	132M4	30000	9316
36.0	1791	2.7	40.29	B143	132MA4	32552	32552
35.8	1802	1.6	40.53	B123	132MA4	30000	9327
35.5	1816	0.9	41.12	B103	132M4	22000	6769
35.3	1828	0.9	41.12	B103	132MA4	22000	6778
35.3	1846	1.6	27.51	B123	160M6	30000	9324
35.3	1842	2.6	27.44	B143	160M6	32618	32618
35.2	1769	3.4	83.89	B153	132M2	58364	58364
34.7	1793	3.3	83.89	B153	132SB2	58604	58604
34.5	1804	2.1	85.54	B143	132M2	33054	33054
34.0	1829	2.1	85.54	B143	132SB2	33150	33150
33.7	1848	3.2	87.65	B153	132M2	59137	59137
33.2	1874	3.2	87.65	B153	132SB2	59379	59379
33.1	1950	2.5	44.16	B143	132M4	33133	33133
32.8	1895	1.4	89.87	B123	132M2	30000	9541
32.8	1963	2.4	44.16	B143	132MA4	33179	33179

5.1 B/BA MOTORIDUTTORE (50Hz)

7.50 kW

n2 [rpm]	M2 [Nm]	fs	i	Riduttore	Motore	Fr2 D-S-P [N]	Fr2 C [N]
32.5	1982	1.5	44.89	B123	132M4	30000	9464
32.4	1921	1.4	89.87	B123	132SB2	30000	9561
32.3	1996	1.5	44.89	B123	132MA4	30000	9473
32.3	2017	2.4	30.05	B143	160M6	33229	33229
31.7	1962	3.1	93.05	B153	132M2	60201	60201
31.5	2067	1.4	30.79	B123	160M6	30000	9480
31.3	1985	1.9	94.13	B143	132M2	33721	33721
31.3	1989	3.0	93.05	B153	132SB2	60447	60447
31.0	2098	1.4	31.26	B123	160M6	30000	9500
30.9	2012	1.9	94.13	B143	132SB2	33815	33815
30.7	2099	3.8	47.53	B153	132M4	60664	60664
30.5	2113	3.8	47.53	B153	132MA4	60787	60787
30.2	2135	2.3	48.35	B143	132M4	33737	33737
30.0	2150	2.3	48.35	B143	132MA4	33782	33782
29.6	2102	1.2	99.70	B123	132M2	30000	9688
29.4	2216	2.2	33.01	B143	160M6	33845	33845
29.3	2199	1.5	49.80	B123	132M4	30000	9600
29.2	2131	1.2	99.70	B123	132SB2	30000	9706
29.1	2214	1.4	49.80	B123	132MA4	30000	9608
28.9	2232	3.6	50.56	B153	132M4	61781	61781
28.8	2257	3.7	33.63	B153	160M6	61770	61770
28.7	2248	3.6	50.56	B153	132MA4	61906	61906
28.6	2174	2.8	103.12	B153	132M2	62066	62066
28.2	2204	2.7	103.12	B153	132SB2	62316	62316
28.0	2328	1.3	34.68	B123	160M6	30000	9626
27.9	2232	1.7	105.83	B143	132M2	34513	34513
27.7	2249	1.2	106.65	B123	132M2	30000	9776
27.7	2350	3.6	35.02	B153	160M6	62506	62506
27.5	2347	2.1	53.16	B143	132M4	34349	34349
27.5	2262	1.7	105.83	B143	132SB2	34603	34603
27.3	2280	1.2	106.65	B123	132SB2	30000	9793
27.3	2363	2.1	53.16	B143	132MA4	34392	34392
26.9	2397	1.3	54.30	B123	132M4	30000	9700
26.7	2414	1.3	54.30	B123	132MA4	30000	9708
26.7	2412	2.1	54.63	B143	132M4	34520	34520
26.7	2413	3.3	54.64	B153	132M4	63203	63203
26.5	2461	2.0	36.67	B143	160M6	34507	34507
26.5	2429	2.1	54.63	B143	132MA4	34562	34562
26.5	2429	3.3	54.64	B153	132MA4	63331	63331
26.4	2360	1.6	111.94	B143	132M2	34880	34880
26.0	2393	1.6	111.94	B143	132SB2	34968	34968
25.5	2529	3.2	57.27	B153	132M4	64077	64077
25.3	2546	3.1	57.27	B153	132MA4	64206	64206
25.0	2605	3.2	38.81	B153	160M6	64407	64407
24.7	2522	1.0	119.60	B123	132M2	30000	9908

5.1 B/BA MOTORIDUTTORE (50Hz)

7.50 kW

n2 [rpm]	M2 [Nm]	fs	i	Riduttore	Motore	Fr2 D-S-P [N]	Fr2 C [N]
24.7	2606	1.9	59.02	B143	132M4	34992	34992
24.6	2621	1.2	59.36	B123	132M4	30000	9790
24.6	2624	1.9	59.02	B143	132MA4	35033	35033
24.4	2639	1.2	59.36	B123	132MA4	30000	9796
24.3	2557	1.0	119.60	B123	132SB2	30000	9922
24.1	2704	1.9	40.29	B143	160M6	35068	35068
24.0	2690	3.0	60.92	B153	132M4	65000	65000
23.9	2720	1.1	40.53	B123	160M6	30000	9779
23.8	2708	3.0	60.92	B153	132MA4	65000	65000
23.8	2612	2.3	123.88	B153	132M2	65000	65000
23.7	2628	1.4	124.62	B143	132M2	35556	35556
23.5	2648	2.3	123.88	B153	132SB2	65000	65000
23.4	2664	1.4	124.62	B143	132SB2	35639	35639
23.3	2763	1.2	62.59	B123	132M4	30000	9836
23.2	2782	1.2	62.59	B123	132MA4	30000	9842
23.0	2802	2.9	63.47	B153	132M4	65000	65000
22.9	2839	3.0	42.30	B153	160M6	65000	65000
22.8	2822	2.8	63.47	B153	132MA4	65000	65000
22.5	2865	1.7	64.88	B143	132M4	35541	35541
22.3	2884	1.7	64.88	B143	132MA4	35580	35580
22.0	2964	1.7	44.16	B143	160M6	35582	35582
22.0	2831	2.1	134.27	B153	132M2	65000	65000
21.7	2870	2.1	134.27	B153	132SB2	65000	65000
21.6	3013	1.0	44.89	B123	160M6	30000	9853
21.6	2877	1.3	136.44	B143	132M2	36094	36094
21.3	2917	1.3	136.44	B143	132SB2	36173	36173
21.0	3066	1.1	69.43	B123	132M4	30000	9909
20.9	3087	1.1	69.43	B123	132MA4	30000	9912
20.7	3110	1.6	70.43	B143	132M4	35986	35986
20.6	3131	1.6	70.43	B143	132MA4	36022	36022
20.5	3141	2.5	71.15	B153	132M4	65000	65000
20.4	3190	2.6	47.53	B153	160M6	65000	65000
20.4	3163	2.5	71.15	B153	132MA4	65000	65000
20.1	3245	1.6	48.35	B143	160M6	36052	36052
19.8	3147	1.9	149.26	B153	132M2	65000	65000
19.7	3154	1.2	149.59	B143	132M2	36606	36606
19.6	3286	1.1	74.42	B123	132M4	30000	9942
19.5	3308	1.1	74.42	B123	132MA4	30000	9945
19.5	3343	1.0	49.80	B123	160M6	30000	9901
19.5	3198	1.2	149.59	B143	132SB2	36678	36678
19.5	3191	1.9	149.26	B153	132SB2	65000	65000
19.2	3394	2.5	50.56	B153	160M6	65000	65000
19.0	3423	4.0	51.00	B163	160M6	80000	65000
18.9	3405	1.5	77.12	B143	132M4	36439	36439
18.9	3410	2.3	77.22	B153	132M4	65000	65000

5.1 B/BA MOTORIDUTTORE (50Hz)

7.50 kW

n2 [rpm]	M2 [Nm]	fs	i	Riduttore	Motore	Fr2 D-S-P [N]	Fr2 C [N]
18.8	3428	1.5	77.12	B143	132MA4	36472	36472
18.8	3433	2.3	77.22	B153	132MA4	65000	65000
18.2	3534	1.0	80.04	B123	132M4	30000	9963
18.2	3568	1.5	53.16	B143	160M6	36497	36497
18.1	3558	1.0	80.04	B123	132MA4	30000	9964
18.1	3600	3.8	53.63	B163	160M6	80000	65000
17.9	3645	0.9	54.30	B123	160M6	30000	9918
17.8	3667	1.4	54.63	B143	160M6	36615	36615
17.8	3667	2.3	54.64	B153	160M6	65000	65000
17.8	3488	1.7	165.42	B153	132M2	65000	65000
17.7	3512	1.1	166.53	B143	132M2	37148	37148
17.6	3536	1.7	165.42	B153	132SB2	65000	65000
17.5	3560	1.1	166.53	B143	132SB2	37212	37212
17.4	3704	2.2	83.89	B153	132M4	65000	65000
17.3	3729	2.1	83.89	B153	132MA4	65000	65000
17.1	3777	1.3	85.54	B143	132M4	36899	36899
17.0	3803	1.3	85.54	B143	132MA4	36927	36927
16.9	3844	2.2	57.27	B153	160M6	65000	65000
16.7	3870	2.1	87.65	B153	132M4	65000	65000
16.5	3897	2.1	87.65	B153	132MA4	65000	65000
16.5	3958	3.4	58.97	B163	160M6	80000	65000
16.4	3961	1.3	59.02	B143	160M6	36924	36924
15.9	4089	2.1	60.92	B153	160M6	65000	65000
15.7	4108	1.9	93.05	B153	132M4	65000	65000
15.6	4137	1.9	93.05	B153	132MA4	65000	65000
15.5	4156	1.2	94.13	B143	132M4	37259	37259
15.4	4185	1.2	94.13	B143	132MA4	37282	37282
15.3	4260	2.0	63.47	B153	160M6	65000	65000
15.0	4355	1.2	64.88	B143	160M6	37242	37242
14.2	4553	1.8	103.12	B153	132M4	65000	65000
14.1	4584	1.7	103.12	B153	132MA4	65000	65000
13.9	4683	2.9	69.78	B163	160M6	80000	65000
13.8	4728	1.1	70.43	B143	160M6	37457	37457
13.8	4673	1.1	105.83	B143	132M4	37603	37603
13.7	4705	1.1	105.83	B143	132MA4	37619	37619
13.6	4775	1.8	71.15	B153	160M6	65000	65000
13.0	4942	1.0	111.94	B143	132M4	37724	37724
13.0	4976	1.0	111.94	B143	132MA4	37736	37736
12.6	5176	1.0	77.12	B143	160M6	37622	37622
12.6	5183	1.6	77.22	B153	160M6	65000	65000
12.6	5149	2.7	76.72	B163	160M6	80000	65000
11.8	5469	1.5	123.88	B153	132M4	65000	65000
11.7	5502	0.9	124.62	B143	132M4	37866	37866
11.7	5507	1.5	123.88	B153	132MA4	65000	65000
11.6	5540	0.9	124.62	B143	132MA4	37870	37870

5.1 B/BA MOTORIDUTTORE (50Hz)

7.50 kW

n2 [rpm]	M2 [Nm]	fs	i	Riduttore	Motore	Fr2 D-S-P [N]	Fr2 C [N]
11.6	5631	1.5	83.89	B153	160M6	65000	65000
11.3	5742	0.9	85.54	B143	160M6	37702	37702
11.1	5883	1.4	87.65	B153	160M6	65000	65000
11.1	5875	2.3	87.54	B163	160M6	80000	65000
10.9	5928	1.3	134.27	B153	132M4	65000	65000
10.8	5969	1.3	134.27	B153	132MA4	65000	65000
10.4	6245	1.3	93.05	B153	160M6	65000	65000
10.1	6460	2.1	96.25	B163	160M6	80000	65000
9.8	6590	1.2	149.26	B153	132M4	65000	65000
9.7	6636	1.2	149.26	B153	132MA4	65000	65000
9.4	6921	1.2	103.12	B153	160M6	65000	65000
9.3	6976	2.0	103.93	B163	160M6	80000	65000
8.8	7303	1.1	165.42	B153	132M4	65000	65000
8.8	7354	1.1	165.42	B153	132MA4	65000	65000
8.5	7670	1.8	114.27	B163	160M6	80000	65000
7.8	8315	1.0	123.88	B153	160M6	65000	65000
7.7	8476	1.6	126.29	B163	160M6	80000	65000
7.2	9012	0.9	134.27	B153	160M6	65000	65000
7.0	9320	1.5	138.85	B163	160M6	80000	65000
6.3	10392	1.3	154.83	B163	160M6	80000	65000

9.20 kW

n2 [rpm]	M2 [Nm]	fs	i	Riduttore	Motore	Fr2 D-S-P [N]	Fr2 C [N]
190.5	401	3.9	15.38	B123	132M2	21727	6208
189.2	403	3.9	15.38	B123	132MA2	21768	6219
185.7	426	1.2	7.81	B083	132MB4	12118	3462
182.0	434	3.5	7.97	B123	132MB4	21927	6265
178.4	443	1.8	8.13	B103	132MB4	15697	4485
169.7	450	2.3	17.27	B103	132M2	15962	4561
168.5	453	2.3	17.27	B103	132MA2	15992	4569
168.2	470	1.3	8.62	B083	132MB4	12399	3543
161.7	489	1.8	8.97	B103	132MB4	16125	4607
157.7	484	3.4	18.58	B123	132M2	22859	6531
156.7	487	3.4	18.58	B123	132MA2	22900	6543
153.8	496	2.1	19.06	B103	132M2	16398	4685
152.7	500	2.1	19.06	B103	132MA2	16428	4694
150.7	525	3.4	9.62	B123	132MB4	23049	6586
142.2	537	3.5	20.61	B123	132M2	23490	6711
141.2	540	3.5	20.61	B123	132MA2	23531	6723
140.3	564	3.5	10.33	B123	132MB4	23480	6708
138.2	572	1.1	10.49	B083	132MB4	12944	3698
132.8	596	1.7	10.92	B103	132MB4	16997	4856
128.6	593	3.5	22.78	B123	132M2	24102	6886

5.1 B/BA MOTORIDUTTORE (50Hz)

9.20 kW

n2 [rpm]	M2 [Nm]	fs	i	Riduttore	Motore	Fr2 D-S-P [N]	Fr2 C [N]
127.7	597	3.5	22.78	B123	132MA2	24144	6898
125.1	632	1.2	11.59	B083	132MB4	13210	3774
123.6	617	1.7	23.70	B103	132M2	17380	4966
122.8	621	1.7	23.70	B103	132MA2	17411	4975
120.3	657	1.5	12.05	B103	132MB4	17437	4982
116.2	681	2.9	12.48	B123	132MB4	24616	7033
113.2	674	3.1	25.89	B123	132M2	24887	7111
112.4	679	3.1	25.89	B123	132MA2	24929	7123
106.5	716	2.9	27.51	B123	132M2	25260	7217
105.8	721	2.9	27.51	B123	132MA2	25302	7229
104.7	755	2.8	13.84	B123	132MB4	25241	7212
100.5	787	1.0	14.43	B083	132MB4	13766	3933
100.1	790	3.9	14.49	B143	132MB4	24782	24782
96.8	817	1.5	14.99	B103	132MB4	18418	5262
95.9	796	1.5	30.55	B103	132M2	18542	5298
95.2	801	1.5	30.55	B103	132MA2	18573	5307
95.2	802	2.6	30.79	B123	132M2	25949	7414
94.5	807	2.6	30.79	B123	132MA2	25991	7426
94.3	839	2.5	15.38	B123	132MB4	25871	7392
93.7	814	2.6	31.26	B123	132M2	26041	7440
93.1	820	2.6	31.26	B123	132MA2	26083	7452
88.6	861	1.5	33.07	B103	132M2	18904	5401
88.0	867	1.5	33.07	B103	132MA2	18935	5410
87.4	905	0.9	16.60	B083	132MB4	14089	4025
85.1	929	3.4	17.04	B143	132MB4	25842	25842
84.5	903	2.3	34.68	B123	132M2	26670	7620
84.0	942	1.5	17.27	B103	132MB4	19056	5445
83.9	909	2.3	34.68	B123	132MA2	26711	7632
81.7	934	1.4	35.87	B103	132M2	19276	5507
81.1	941	1.4	35.87	B103	132MA2	19307	5516
79.9	955	3.8	36.67	B143	132M2	26365	26365
79.4	962	3.7	36.67	B143	132MA2	26410	26410
78.1	1013	2.2	18.58	B123	132MB4	26980	7709
77.7	1017	3.5	18.66	B143	132MB4	26435	26435
76.1	1039	1.3	19.06	B103	132MB4	19494	5570
72.7	1049	3.4	40.29	B143	132M2	26991	26991
72.3	1056	2.0	40.53	B123	132M2	27596	7885
72.2	1056	3.4	40.29	B143	132MA2	27037	27037
71.8	1063	2.0	40.53	B123	132MA2	27636	7896
71.2	1071	1.2	41.12	B103	132M2	19896	5685
70.8	1078	1.2	41.12	B103	132MA2	19927	5693
70.4	1124	2.2	20.61	B123	132MB4	27573	7878
69.1	1145	3.5	21.00	B143	132MB4	27208	27208
66.3	1150	3.1	44.16	B143	132M2	27602	27602
65.9	1158	3.1	44.16	B143	132MA2	27648	27648

5.1 B/BA MOTORIDUTTORE (50Hz)

9.20 kW

n2 [rpm]	M2 [Nm]	fs	i	Riduttore	Motore	Fr2 D-S-P [N]	Fr2 C [N]
65.7	1162	1.1	44.61	B103	132M2	20260	5789
65.3	1169	1.9	44.89	B123	132M2	28187	8053
65.2	1170	1.1	44.61	B103	132MA2	20290	5797
64.8	1177	1.9	44.89	B123	132MA2	28226	8064
63.7	1242	2.3	22.78	B123	132MB4	28129	8037
63.7	1242	3.5	22.77	B143	132MB4	27737	27737
62.0	1231	1.0	47.28	B103	132M2	20518	5862
61.5	1240	1.0	47.28	B103	132MA2	20548	5871
61.2	1292	1.1	23.70	B103	132MB4	20443	5841
60.6	1259	3.0	48.35	B143	132M2	28204	28204
60.2	1268	3.0	48.35	B143	132MA2	28249	28249
58.8	1297	1.9	49.80	B123	132M2	28769	8220
58.4	1306	1.8	49.80	B123	132MA2	28806	8230
56.6	1398	3.3	25.63	B143	132MB4	28500	28500
56.0	1412	2.0	25.89	B123	132MB4	28809	8231
55.1	1384	2.7	53.16	B143	132M2	28828	28828
54.7	1446	1.0	26.51	B103	132MB4	20914	5975
54.7	1394	2.7	53.16	B143	132MA2	28873	28873
54.0	1414	1.7	54.30	B123	132M2	29235	8353
53.6	1424	1.7	54.30	B123	132MA2	29271	8363
53.6	1423	2.6	54.63	B143	132M2	29006	29006
53.3	1432	2.6	54.63	B143	132MA2	29051	29051
52.8	1497	3.1	27.44	B143	132MB4	28937	28937
52.7	1500	1.9	27.51	B123	132MB4	29117	8319
50.8	1502	4.0	57.27	B153	132MA2	51785	51785
49.6	1537	2.4	59.02	B143	132M2	29508	29508
49.4	1546	1.6	59.36	B123	132M2	29696	8484
49.3	1548	2.4	59.02	B143	132MA2	29552	29552
49.0	1556	1.5	59.36	B123	132MA2	29730	8494
48.3	1639	2.9	30.05	B143	132MB4	29508	29508
48.1	1587	3.8	60.92	B153	132M2	52648	52648
47.8	1598	3.8	60.92	B153	132MA2	52757	52757
47.5	1666	1.0	30.55	B103	132MB4	21481	6138
47.1	1679	1.7	30.79	B123	132MB4	29660	8474
46.8	1630	1.5	62.59	B123	132M2	29958	8559
46.5	1641	1.5	62.59	B123	132MA2	29991	8569
46.4	1705	1.6	31.26	B123	132MB4	29729	8494
46.2	1653	3.6	63.47	B153	132M2	53299	53299
45.8	1664	3.6	63.47	B153	132MA2	53409	53409
45.2	1690	2.2	64.88	B143	132M2	30114	30114
44.9	1701	2.2	64.88	B143	132MA2	30157	30157
43.9	1803	0.9	33.07	B103	132MB4	21782	6223
43.9	1800	2.6	33.01	B143	132MB4	30087	30087
42.2	1808	1.4	69.43	B123	132M2	30000	8698
41.9	1821	1.4	69.43	B123	132MA2	30000	8707

5.1 B/BA MOTORIDUTTORE (50Hz)

9.20 kW

n2 [rpm]	M2 [Nm]	fs	i	Riduttore	Motore	Fr2 D-S-P [N]	Fr2 C [N]
41.8	1891	1.5	34.68	B123	132MB4	30000	8623
41.6	1834	2.0	70.43	B143	132M2	30628	30628
41.3	1847	2.0	70.43	B143	132MA2	30670	30670
41.2	1853	3.2	71.15	B153	132M2	55145	55145
40.9	1866	3.2	71.15	B153	132MA2	55257	55257
39.5	2000	2.4	36.67	B143	132MB4	30716	30716
39.4	1938	1.4	74.42	B123	132M2	30000	8784
39.1	1951	1.3	74.42	B123	132MA2	30000	8792
38.0	2008	1.9	77.12	B143	132M2	31180	31180
37.9	2011	3.0	77.22	B153	132M2	56499	56499
37.7	2022	1.9	77.12	B143	132MA2	31221	31221
37.7	2025	3.0	77.22	B153	132MA2	56613	56613
36.6	2084	1.3	80.04	B123	132M2	30000	8867
36.4	2099	1.3	80.04	B123	132MA2	30000	8875
36.0	2197	2.2	40.29	B143	132MB4	31257	31257
35.8	2210	1.3	40.53	B123	132MB4	30000	8790
34.9	2185	2.7	83.89	B153	132M2	57891	57891
34.7	2200	2.7	83.89	B153	132MA2	58007	58007
34.3	2228	1.7	85.54	B143	132M2	31789	31789
34.3	2307	3.5	42.30	B153	132MB4	58089	58089
34.0	2243	1.7	85.54	B143	132MA2	31828	31828
33.4	2283	2.6	87.65	B153	132M2	58639	58639
33.2	2298	2.6	87.65	B153	132MA2	58756	58756
32.8	2408	2.0	44.16	B143	132MB4	31759	31759
32.6	2340	1.1	89.87	B123	132M2	30000	8983
32.4	2356	1.1	89.87	B123	132MA2	30000	8989
32.3	2448	1.2	44.89	B123	132MB4	30000	8879
31.5	2423	2.5	93.05	B153	132M2	59667	59667
31.3	2440	2.5	93.05	B153	132MA2	59785	59785
31.1	2451	1.5	94.13	B143	132M2	32323	32323
30.9	2468	1.5	94.13	B143	132MA2	32360	32360
30.5	2592	3.1	47.53	B153	132MB4	60085	60085
30.0	2637	1.9	48.35	B143	132MB4	32228	32228
29.4	2596	1.0	99.70	B123	132M2	30000	9067
29.2	2614	1.0	99.70	B123	132MA2	30000	9072
29.1	2716	1.2	49.80	B123	132MB4	30000	8949
28.7	2757	2.9	50.56	B153	132MB4	61158	61158
28.4	2685	2.2	103.12	B153	132M2	61462	61462
28.2	2704	2.2	103.12	B153	132MA2	61583	61583
27.7	2756	1.4	105.83	B143	132M2	32933	32933
27.5	2775	1.4	105.83	B143	132MA2	32967	32967
27.3	2899	1.7	53.16	B143	132MB4	32683	32683
26.7	2961	1.1	54.30	B123	132MB4	30000	8989
26.5	2979	1.7	54.63	B143	132MB4	32806	32806
26.5	2980	2.7	54.64	B153	132MB4	62523	62523

5.1 B/BA MOTORIDUTTORE (50Hz)

9.20 kW

n2 [rpm]	M2 [Nm]	fs	i	Riduttore	Motore	Fr2 D-S-P [N]	Fr2 C [N]
26.2	2915	1.3	111.94	B143	132M2	33206	33206
26.0	2935	1.3	111.94	B143	132MA2	33238	33238
25.3	3123	2.6	57.27	B153	132MB4	63359	63359
24.6	3218	1.6	59.02	B143	132MB4	33136	33136
24.4	3237	1.0	59.36	B123	132MB4	30000	9011
23.8	3322	2.4	60.92	B153	132MB4	64467	64467
23.7	3226	1.9	123.88	B153	132M2	64751	64751
23.5	3245	1.2	124.62	B143	132M2	33684	33684
23.5	3248	1.8	123.88	B153	132MA2	64875	64875
23.4	3268	1.1	124.62	B143	132MA2	33713	33713
23.2	3413	1.0	62.59	B123	132MB4	30000	9014
22.8	3461	2.3	63.47	B153	132MB4	65000	65000
22.3	3538	1.4	64.88	B143	132MB4	33494	33494
21.8	3497	1.7	134.27	B153	132M2	65000	65000
21.7	3521	1.7	134.27	B153	132MA2	65000	65000
21.5	3553	1.1	136.44	B143	132M2	34039	34039
21.3	3578	1.0	136.44	B143	132MA2	34064	34064
20.6	3841	1.3	70.43	B143	132MB4	33758	33758
20.4	3880	2.1	71.15	B153	132MB4	65000	65000
19.6	3887	1.5	149.26	B153	132M2	65000	65000
19.5	3914	1.5	149.26	B153	132MA2	65000	65000
18.8	4205	1.2	77.12	B143	132MB4	33993	33993
18.8	4211	1.9	77.22	B153	132MB4	65000	65000
17.7	4308	1.4	165.42	B153	132M2	65000	65000
17.6	4338	1.4	165.42	B153	132MA2	65000	65000
17.3	4575	1.7	83.89	B153	132MB4	65000	65000
17.0	4665	1.1	85.54	B143	132MB4	34177	34177
16.5	4780	1.7	87.65	B153	132MB4	65000	65000
15.6	5074	1.6	93.05	B153	132MB4	65000	65000
15.4	5133	1.0	94.13	B143	132MB4	34256	34256
14.1	5623	1.4	103.12	B153	132MB4	65000	65000
11.7	6755	1.2	123.88	B153	132MB4	65000	65000
10.8	7322	1.1	134.27	B153	132MB4	65000	65000
9.7	8140	1.0	149.26	B153	132MB4	65000	65000

11.00 kW

n2 [rpm]	M2 [Nm]	fs	i	Riduttore	Motore	Fr2 D-S-P [N]	Fr2 C [N]
233.2	391	3.8	12.48	B123	132MB2	20248	5785
210.2	434	3.6	13.84	B123	132MB2	20820	5949
189.2	482	3.3	15.38	B123	132MB2	21405	6116
185.2	511	2.9	7.97	B123	160MA4	21443	6126
184.4	513	1.0	7.81	B083	132MC4	11798	3371
181.5	521	1.5	8.13	B103	160MA4	15378	4394

5.1 B/BA MOTORIDUTTORE (50Hz)

11.00 kW

n2 [rpm]	M2 [Nm]	fs	i	Riduttore	Motore	Fr2 D-S-P [N]	Fr2 C [N]
180.8	523	2.9	7.97	B123	132MC4	21575	6164
180.8	523	2.9	7.97	B123	160S4	21575	6164
177.2	534	1.5	8.13	B103	132MC4	15475	4422
177.2	534	1.5	8.13	B103	160S4	15475	4422
167.0	566	1.1	8.62	B083	132MC4	12044	3441
164.5	575	1.6	8.97	B103	160MA4	15780	4508
160.6	589	1.5	8.97	B103	132MC4	15878	4537
160.6	589	1.5	8.97	B103	160S4	15878	4537
156.7	582	2.8	18.58	B123	132MB2	22462	6418
153.3	617	2.9	9.62	B123	160MA4	22483	6424
149.7	632	2.8	9.62	B123	132MC4	22616	6462
149.7	632	2.8	9.62	B123	160S4	22616	6462
142.7	662	3.0	10.33	B123	160MA4	22879	6537
141.2	646	2.9	20.61	B123	132MB2	23045	6584
139.3	678	2.9	10.33	B123	132MC4	23011	6575
139.3	678	2.9	10.33	B123	160S4	23011	6575
137.2	689	0.9	10.49	B083	132MC4	12506	3573
135.1	700	1.4	10.92	B103	160MA4	16591	4740
131.9	717	1.4	10.92	B103	132MC4	16690	4769
131.9	717	1.4	10.92	B103	160S4	16690	4769
127.7	714	2.9	22.78	B123	132MB2	23607	6745
124.3	761	1.0	11.59	B083	132MC4	12724	3635
122.4	772	1.3	12.05	B103	160MA4	16997	4856
121.8	784	2.0	7.97	B123	160L6	23714	6775
121.3	779	4.0	11.87	B143	132MC4	23137	23137
121.3	779	4.0	11.87	B143	160S4	23137	23137
119.5	791	1.3	12.05	B103	132MC4	17096	4885
119.5	791	1.3	12.05	B103	160S4	17096	4885
119.4	800	1.0	8.13	B103	160L6	17078	4879
118.2	800	2.5	12.48	B123	160MA4	23911	6832
115.4	819	2.4	12.48	B123	132MC4	24042	6869
115.4	819	2.4	12.48	B123	160S4	24042	6869
112.4	812	2.6	25.89	B123	132MB2	24319	6948
108.2	883	1.1	8.97	B103	160L6	17480	4994
106.5	887	2.4	13.84	B123	160MA4	24471	6992
105.8	863	2.4	27.51	B123	132MB2	24653	7044
104.0	909	2.3	13.84	B123	132MC4	24599	7028
104.0	909	2.3	13.84	B123	160S4	24599	7028
101.8	928	3.3	14.49	B143	160MA4	24187	24187
100.8	947	2.0	9.62	B123	160L6	24720	7063
99.4	951	3.3	14.49	B143	132MC4	24331	24331
99.4	951	3.3	14.49	B143	160S4	24331	24331
98.4	961	1.2	14.99	B103	160MA4	17890	5111
96.9	942	3.7	30.05	B143	132MB2	24596	24596
96.1	984	1.2	14.99	B103	132MC4	17987	5139

5.1 B/BA MOTORIDUTTORE (50Hz)

11.00 kW

n2 [rpm]	M2 [Nm]	fs	i	Riduttore	Motore	Fr2 D-S-P [N]	Fr2 C [N]
96.1	984	1.2	14.99	B103	160S4	17987	5139
95.9	986	2.1	15.38	B123	160MA4	25027	7151
94.5	965	2.2	30.79	B123	132MB2	25264	7218
93.9	1017	2.1	10.33	B123	160L6	25092	7169
93.6	1010	2.1	15.38	B123	132MC4	25153	7186
93.6	1010	2.1	15.38	B123	160S4	25153	7186
93.1	980	2.1	31.26	B123	132MB2	25346	7242
89.5	1067	3.0	10.84	B143	160L6	24927	24927
88.8	1075	1.0	10.92	B103	160L6	18272	5221
88.2	1035	3.4	33.01	B143	132MB2	25170	25170
86.6	1092	2.9	17.04	B143	160MA4	25160	25160
85.4	1107	1.3	17.27	B103	160MA4	18458	5274
84.5	1119	2.9	17.04	B143	132MC4	25303	25303
84.5	1119	2.9	17.04	B143	160S4	25303	25303
83.9	1087	1.9	34.68	B123	132MB2	25893	7398
83.4	1134	1.2	17.27	B103	132MC4	18553	5301
83.4	1134	1.2	17.27	B103	160S4	18553	5301
81.7	1168	2.8	11.87	B143	160L6	25464	25464
79.4	1191	1.8	18.58	B123	160MA4	25985	7424
79.4	1150	3.1	36.67	B143	132MB2	25810	25810
79.1	1196	3.0	18.66	B143	160MA4	25699	25699
77.7	1229	1.7	12.48	B123	160L6	26034	7438
77.5	1220	1.8	18.58	B123	132MC4	26102	7458
77.5	1220	1.8	18.58	B123	160S4	26102	7458
77.4	1221	1.1	19.06	B103	160MA4	18843	5384
77.2	1225	2.9	18.66	B143	132MC4	25841	25841
77.2	1225	2.9	18.66	B143	160S4	25841	25841
76.7	1245	3.8	12.64	B153	160L6	45297	45297
75.6	1251	1.1	19.06	B103	132MC4	18936	5410
75.6	1251	1.1	19.06	B103	160S4	18936	5410
72.2	1263	2.8	40.29	B143	132MB2	26378	26378
71.8	1271	1.7	40.53	B123	132MB2	26680	7623
71.6	1321	1.9	20.61	B123	160MA4	26483	7567
70.2	1346	3.0	21.00	B143	160MA4	26394	26394
70.1	1363	1.6	13.84	B123	160L6	26520	7577
69.9	1353	1.8	20.61	B123	132MC4	26594	7598
69.9	1353	1.8	20.61	B123	160S4	26594	7598
69.2	1379	3.8	14.01	B153	160L6	46724	46724
68.6	1379	2.9	21.00	B143	132MC4	26533	26533
68.6	1379	2.9	21.00	B143	160S4	26533	26533
67.0	1426	2.3	14.49	B143	160L6	26627	26627
65.9	1385	2.6	44.16	B143	132MB2	26925	26925
64.8	1407	1.6	44.89	B123	132MB2	27167	7762
64.8	1460	3.0	22.77	B143	160MA4	26864	26864
64.7	1460	1.9	22.78	B123	160MA4	26938	7696

5.1 B/BA MOTORIDUTTORE (50Hz)

11.00 kW

n2 [rpm]	M2 [Nm]	fs	i	Riduttore	Motore	Fr2 D-S-P [N]	Fr2 C [N]
63.2	1496	1.9	22.78	B123	132MC4	27042	7726
63.2	1496	1.9	22.78	B123	160S4	27042	7726
63.2	1495	2.9	22.77	B143	132MC4	27002	27002
63.2	1495	2.9	22.77	B143	160S4	27002	27002
63.1	1514	1.5	15.38	B123	160L6	26984	7710
63.0	1516	3.5	15.40	B153	160L6	48069	48069
62.2	1519	0.9	23.70	B103	160MA4	19656	5616
60.2	1516	2.5	48.35	B143	132MB2	27458	27458
58.4	1561	1.5	49.80	B123	132MB2	27632	7895
57.6	1643	2.8	25.63	B143	160MA4	27533	27533
57.6	1585	3.8	50.56	B153	132MB2	49487	49487
57.0	1659	1.7	25.89	B123	160MA4	27472	7849
56.9	1678	2.0	17.04	B143	160L6	27541	27541
56.2	1683	2.7	25.63	B143	132MC4	27666	27666
56.2	1683	2.7	25.63	B143	160S4	27666	27666
55.6	1700	1.6	25.89	B123	132MC4	27566	7876
55.6	1700	1.6	25.89	B123	160S4	27566	7876
54.7	1667	2.3	53.16	B143	132MB2	28003	28003
53.7	1759	2.6	27.44	B143	160MA4	27910	27910
53.6	1763	1.6	27.51	B123	160MA4	27705	7916
53.6	1702	1.4	54.30	B123	132MB2	27991	7997
53.3	1713	2.2	54.63	B143	132MB2	28157	28157
53.3	1713	3.5	54.64	B153	132MB2	50643	50643
52.5	1802	2.6	27.44	B143	132MC4	28041	28041
52.5	1802	2.6	27.44	B143	160S4	28041	28041
52.3	1806	1.6	27.51	B123	132MC4	27793	7941
52.3	1806	1.6	27.51	B123	160S4	27793	7941
52.3	1827	3.4	18.56	B153	160L6	50804	50804
52.2	1829	1.3	18.58	B123	160L6	27719	7920
52.0	1837	2.1	18.66	B143	160L6	28032	28032
50.8	1796	3.3	57.27	B153	132MB2	51354	51354
49.3	1850	2.0	59.02	B143	132MB2	28587	28587
49.1	1926	2.4	30.05	B143	160MA4	28396	28396
49.0	1861	1.3	59.36	B123	132MB2	28330	8094
47.9	1974	1.4	30.79	B123	160MA4	28096	8027
47.9	1973	2.4	30.05	B143	132MC4	28521	28521
47.9	1973	2.4	30.05	B143	160S4	28521	28521
47.8	1910	3.1	60.92	B153	132MB2	52298	52298
47.2	2004	1.4	31.26	B123	160MA4	28143	8041
47.2	2024	3.4	20.56	B153	160L6	52359	52359
47.1	2029	1.3	20.61	B123	160L6	28058	8017
46.8	2022	1.4	30.79	B123	132MC4	28171	8049
46.8	2022	1.4	30.79	B123	160S4	28171	8049
46.5	1962	1.3	62.59	B123	132MB2	28515	8147
46.2	2067	2.0	21.00	B143	160L6	28645	28645

5.1 B/BA MOTORIDUTTORE (50Hz)

11.00 kW

n2 [rpm]	M2 [Nm]	fs	i	Riduttore	Motore	Fr2 D-S-P [N]	Fr2 C [N]
46.1	2053	1.4	31.26	B123	132MC4	28217	8062
46.1	2053	1.4	31.26	B123	160S4	28217	8062
45.8	1990	3.0	63.47	B153	132MB2	52931	52931
44.9	2034	1.8	64.88	B143	132MB2	29095	29095
44.7	2116	2.2	33.01	B143	160MA4	28879	28879
43.9	2156	3.7	33.63	B153	160MA4	53512	53512
43.6	2167	2.2	33.01	B143	132MC4	28998	28998
43.6	2167	2.2	33.01	B143	160S4	28998	28998
42.8	2208	3.6	33.63	B153	132MC4	53886	53886
42.8	2208	3.6	33.63	B153	160S4	53886	53886
42.6	2243	1.3	22.78	B123	160L6	28332	8095
42.6	2242	2.1	22.77	B143	160L6	29044	29044
42.5	2223	1.3	34.68	B123	160MA4	28438	8125
42.1	2245	3.6	35.02	B153	160MA4	54142	54142
41.9	2177	1.1	69.43	B123	132MB2	28837	8239
41.5	2277	1.2	34.68	B123	132MC4	28497	8142
41.5	2277	1.2	34.68	B123	160S4	28497	8142
41.3	2208	1.7	70.43	B143	132MB2	29518	29518
41.1	2299	3.5	35.02	B153	160S4	54519	54519
40.9	2231	2.7	71.15	B153	132MB2	54722	54722
40.7	2349	3.0	23.86	B153	160L6	54664	54664
40.2	2351	2.0	36.67	B143	160MA4	29389	29389
39.3	2408	2.0	36.67	B143	132MC4	29500	29500
39.3	2408	2.0	36.67	B143	160S4	29500	29500
39.1	2333	1.1	74.42	B123	132MB2	29018	8291
38.5	2480	2.9	25.19	B153	160L6	55521	55521
38.0	2487	3.2	38.81	B153	160MA4	55766	55766
37.8	2523	1.9	25.63	B143	160L6	29586	29586
37.7	2418	1.6	77.12	B143	132MB2	29959	29959
37.7	2421	2.5	77.22	B153	132MB2	56032	56032
37.5	2549	1.2	25.89	B123	160L6	28592	8169
37.1	2548	3.1	38.81	B153	160S4	56150	56150
36.6	2583	1.9	40.29	B143	160MA4	29812	29812
36.4	2509	1.0	80.04	B123	132MB2	29174	8335
36.4	2598	1.1	40.53	B123	160MA4	28754	8216
35.7	2645	1.8	40.29	B143	132MC4	29915	29915
35.7	2645	1.8	40.29	B143	160S4	29915	29915
35.5	2661	1.1	40.53	B123	132MC4	28788	8225
35.5	2661	1.1	40.53	B123	160S4	28788	8225
35.3	2708	1.1	27.51	B123	160L6	28674	8193
35.3	2702	1.8	27.44	B143	160L6	29876	29876
34.9	2711	3.0	42.30	B153	160MA4	57150	57150
34.7	2630	2.3	83.89	B153	132MB2	57376	57376
34.4	2779	3.0	28.23	B153	160L6	57351	57351
34.0	2682	1.4	85.54	B143	132MB2	30428	30428

5.1 B/BA MOTORIDUTTORE (50Hz)

11.00 kW

n2 [rpm]	M2 [Nm]	fs	i	Riduttore	Motore	Fr2 D-S-P [N]	Fr2 C [N]
34.0	2777	2.9	42.30	B153	132MC4	57540	57540
34.0	2777	2.9	42.30	B153	160S4	57540	57540
33.7	2835	3.8	28.80	B163	160L6	80000	65000
33.4	2831	1.7	44.16	B143	160MA4	30190	30190
33.2	2748	2.2	87.65	B153	132MB2	58096	58096
32.9	2877	1.0	44.89	B123	160MA4	28865	8247
32.6	2899	1.7	44.16	B143	132MC4	30283	30283
32.6	2899	1.7	44.16	B143	160S4	30283	30283
32.3	2958	1.7	30.05	B143	160L6	30227	30227
32.1	2947	1.0	44.89	B123	132MC4	28879	8251
32.1	2947	1.0	44.89	B123	160S4	28879	8251
32.0	2988	2.8	30.35	B153	160L6	58529	58529
31.5	3031	1.0	30.79	B123	160L6	28747	8214
31.4	3044	4.0	30.92	B163	160L6	80000	65000
31.3	2917	2.1	93.05	B153	132MB2	59085	59085
31.0	3078	1.0	31.26	B123	160L6	28749	8214
31.0	3047	2.6	47.53	B153	160MA4	59058	59058
30.9	2951	1.3	94.13	B143	132MB2	30819	30819
30.5	3099	1.6	48.35	B143	160MA4	30524	30524
30.3	3121	2.6	47.53	B153	132MC4	59455	59455
30.3	3121	2.6	47.53	B153	160S4	59455	59455
29.8	3175	1.6	48.35	B143	132MC4	30605	30605
29.8	3175	1.6	48.35	B143	160S4	30605	30605
29.6	3192	1.0	49.80	B123	160MA4	28885	8253
29.4	3250	1.5	33.01	B143	160L6	30547	30547
29.2	3241	2.5	50.56	B153	160MA4	60082	60082
28.9	3270	1.0	49.80	B123	132MC4	28875	8250
28.9	3270	1.0	49.80	B123	160S4	28875	8250
28.9	3269	4.0	51.00	B163	160MA4	80000	65000
28.8	3311	2.5	33.63	B153	160L6	60224	60224
28.5	3320	2.4	50.56	B153	132MC4	60483	60483
28.5	3320	2.4	50.56	B153	160S4	60483	60483
28.3	3372	3.7	34.25	B163	160L6	80000	65000
28.2	3233	1.9	103.12	B153	132MB2	60807	60807
28.2	3348	3.9	51.00	B163	160S4	80000	65000
27.7	3407	1.5	53.16	B143	160MA4	30825	30825
27.7	3447	2.4	35.02	B153	160L6	60897	60897
27.5	3318	1.1	105.83	B143	132MB2	31235	31235
27.5	3438	3.8	53.63	B163	160MA4	80000	65000
27.2	3480	0.9	54.30	B123	160MA4	28821	8235
27.1	3490	1.4	53.16	B143	132MC4	30893	30893
27.1	3490	1.4	53.16	B143	160S4	30893	30893
27.0	3501	1.4	54.63	B143	160MA4	30902	30902
27.0	3502	2.3	54.64	B153	160MA4	61380	61380
26.9	3521	3.7	53.63	B163	160S4	80000	65000

5.1 B/BA MOTORIDUTTORE (50Hz)

11.00 kW

n2 [rpm]	M2 [Nm]	fs	i	Riduttore	Motore	Fr2 D-S-P [N]	Fr2 C [N]
26.5	3610	1.4	36.67	B143	160L6	30842	30842
26.4	3587	1.4	54.63	B143	132MC4	30965	30965
26.4	3587	1.4	54.63	B143	160S4	30965	30965
26.4	3587	2.2	54.64	B153	132MC4	61784	61784
26.4	3587	2.2	54.64	B153	160S4	61784	61784
26.0	3510	1.1	111.94	B143	132MB2	31406	31406
25.8	3671	2.2	57.27	B153	160MA4	62173	62173
25.8	3708	3.5	37.66	B163	160L6	80000	65000
25.1	3760	2.1	57.27	B153	132MC4	62580	62580
25.1	3760	2.1	57.27	B153	160S4	62580	62580
25.0	3783	1.3	59.02	B143	160MA4	31091	31091
25.0	3820	2.2	38.81	B153	160L6	62624	62624
25.0	3780	3.4	58.97	B163	160MA4	80000	65000
24.4	3875	1.3	59.02	B143	132MC4	31141	31141
24.4	3875	1.3	59.02	B143	160S4	31141	31141
24.4	3871	3.4	58.97	B163	160S4	80000	65000
24.2	3905	2.0	60.92	B153	160MA4	63222	63222
24.1	3966	1.3	40.29	B143	160L6	31042	31042
23.9	4002	3.3	40.65	B163	160L6	80000	65000
23.6	4000	2.0	60.92	B153	132MC4	63631	63631
23.6	4000	2.0	60.92	B153	160S4	63631	63631
23.5	3884	1.5	123.88	B153	132MB2	63943	63943
23.2	4068	2.0	63.47	B153	160MA4	63921	63921
22.9	4164	2.0	42.30	B153	160L6	64086	64086
22.7	4159	1.2	64.88	B143	160MA4	31262	31262
22.7	4167	1.9	63.47	B153	132MC4	64332	64332
22.7	4167	1.9	63.47	B153	160S4	64332	64332
22.2	4260	1.2	64.88	B143	132MC4	31294	31294
22.2	4260	1.2	64.88	B143	160S4	31294	31294
22.0	4347	1.2	44.16	B143	160L6	31169	31169
21.7	4210	1.4	134.27	B153	132MB2	65000	65000
21.5	4439	2.8	45.09	B163	160L6	80000	65000
21.1	4472	2.9	69.78	B163	160MA4	80000	65000
20.9	4515	1.1	70.43	B143	160MA4	31350	31350
20.7	4560	1.8	71.15	B153	160MA4	65000	65000
20.6	4581	2.8	69.78	B163	160S4	80000	65000
20.4	4624	1.1	70.43	B143	132MC4	31364	31364
20.4	4624	1.1	70.43	B143	160S4	31364	31364
20.4	4679	1.8	47.53	B153	160L6	65000	65000
20.2	4671	1.7	71.15	B153	132MC4	65000	65000
20.2	4671	1.7	71.15	B153	160S4	65000	65000
20.1	4760	1.1	48.35	B143	160L6	31221	31221
19.5	4680	1.3	149.26	B153	132MB2	65000	65000
19.2	4978	1.7	50.56	B153	160L6	65000	65000
19.2	4917	2.6	76.72	B163	160MA4	80000	65000

5.1 B/BA MOTORIDUTTORE (50Hz)

11.00 kW

n2 [rpm]	M2 [Nm]	fs	i	Riduttore	Motore	Fr2 D-S-P [N]	Fr2 C [N]
19.1	4943	1.0	77.12	B143	160MA4	31373	31373
19.1	4950	1.6	77.22	B153	160MA4	65000	65000
19.0	5021	2.7	51.00	B163	160L6	80000	65000
18.8	5037	2.6	76.72	B163	160S4	80000	65000
18.7	5063	1.0	77.12	B143	132MC4	31365	31365
18.7	5063	1.0	77.12	B143	160S4	31365	31365
18.6	5070	1.6	77.22	B153	132MC4	65000	65000
18.6	5070	1.6	77.22	B153	160S4	65000	65000
18.2	5233	1.0	53.16	B143	160L6	31186	31186
18.1	5279	2.6	53.63	B163	160L6	80000	65000
17.8	5378	1.0	54.63	B143	160L6	31157	31157
17.8	5379	1.6	54.64	B153	160L6	65000	65000
17.6	5377	1.5	83.89	B153	160MA4	65000	65000
17.6	5186	1.2	165.42	B153	132MB2	65000	65000
17.2	5483	0.9	85.54	B143	160MA4	31291	31291
17.2	5508	1.5	83.89	B153	132MC4	65000	65000
17.2	5508	1.5	83.89	B153	160S4	65000	65000
16.9	5638	1.5	57.27	B153	160L6	65000	65000
16.9	5611	2.3	87.54	B163	160MA4	80000	65000
16.8	5618	1.4	87.65	B153	160MA4	65000	65000
16.5	5805	2.4	58.97	B163	160L6	80000	65000
16.5	5747	2.3	87.54	B163	160S4	80000	65000
16.4	5810	0.9	59.02	B143	160L6	31026	31026
16.4	5755	1.4	87.65	B153	132MC4	65000	65000
16.4	5755	1.4	87.65	B153	160S4	65000	65000
15.9	5997	1.4	60.92	B153	160L6	65000	65000
15.9	5964	1.3	93.05	B153	160MA4	65000	65000
15.5	6109	1.3	93.05	B153	132MC4	65000	65000
15.5	6109	1.3	93.05	B153	160S4	65000	65000
15.3	6248	1.3	63.47	B153	160L6	65000	65000
15.3	6169	2.1	96.25	B163	160MA4	80000	65000
15.0	6319	2.1	96.25	B163	160S4	80000	65000
14.3	6610	1.2	103.12	B153	160MA4	65000	65000
14.2	6662	2.0	103.93	B163	160MA4	80000	65000
14.0	6770	1.2	103.12	B153	132MC4	65000	65000
14.0	6770	1.2	103.12	B153	160S4	65000	65000
13.9	6869	2.0	69.78	B163	160L6	80000	65000
13.9	6824	1.9	103.93	B163	160S4	80000	65000
13.6	7004	1.2	71.15	B153	160L6	65000	65000
12.9	7325	1.8	114.27	B163	160MA4	80000	65000
12.6	7602	1.1	77.22	B153	160L6	65000	65000
12.6	7552	1.8	76.72	B163	160L6	80000	65000
12.6	7503	1.7	114.27	B163	160S4	80000	65000
11.9	7940	1.0	123.88	B153	160MA4	65000	65000
11.7	8095	1.6	126.29	B163	160MA4	80000	65000

5.1 B/BA MOTORIDUTTORE (50Hz)

11.00 kW

n2 [rpm]	M2 [Nm]	fs	i	Riduttore	Motore	Fr2 D-S-P [N]	Fr2 C [N]
11.6	8258	1.0	83.89	B153	160L6	65000	65000
11.6	8133	1.0	123.88	B153	132MC4	65000	65000
11.6	8133	1.0	123.88	B153	160S4	65000	65000
11.4	8292	1.6	126.29	B163	160S4	80000	65000
11.1	8629	1.0	87.65	B153	160L6	65000	65000
11.1	8617	1.6	87.54	B163	160L6	80000	65000
11.0	8606	0.9	134.27	B153	160MA4	65000	65000
10.7	8815	0.9	134.27	B153	132MC4	65000	65000
10.7	8815	0.9	134.27	B153	160S4	65000	65000
10.6	8900	1.5	138.85	B163	160MA4	80000	65000
10.4	9160	0.9	93.05	B153	160L6	65000	65000
10.4	9117	1.4	138.85	B163	160S4	80000	65000
10.1	9475	1.4	96.25	B163	160L6	80000	65000
9.5	9924	1.3	154.83	B163	160MA4	80000	65000
9.3	10231	1.3	103.93	B163	160L6	80000	65000
9.3	10166	1.3	154.83	B163	160S4	80000	65000
8.5	11249	1.2	114.27	B163	160L6	80000	65000
7.7	12432	1.1	126.29	B163	160L6	80000	65000
7.0	13669	1.0	138.85	B163	160L6	80000	65000

15.00 kW

n2 [rpm]	M2 [Nm]	fs	i	Riduttore	Motore	Fr2 D-S-P [N]	Fr2 C [N]
185.2	696	2.2	7.97	B123	160LA4	20589	5883
181.5	710	1.1	8.13	B103	160LA4	14833	4238
164.5	784	1.1	8.97	B103	160LA4	15179	4337
153.3	841	2.1	9.62	B123	160LA4	21453	6129
142.7	903	2.2	10.33	B123	160LA4	21771	6220
136.1	947	3.2	10.84	B143	160LA4	21649	21649
135.1	955	1.0	10.92	B103	160LA4	15859	4531
124.3	1037	3.0	11.87	B143	160LA4	22112	22112
123.0	1058	1.5	7.97	B123	180L6	22361	6389
122.4	1053	0.9	12.05	B103	160LA4	16189	4626
118.2	1091	1.8	12.48	B123	160LA4	22574	6450
106.5	1210	1.7	13.84	B123	160LA4	22988	6568
101.9	1278	1.5	9.62	B123	180L6	23100	6600
101.8	1266	2.4	14.49	B143	160LA4	23110	23110
98.4	1310	0.9	14.99	B103	160LA4	16885	4824
95.9	1345	1.6	15.38	B123	160LA4	23379	6680
95.8	1346	3.7	15.40	B153	160LA4	41822	41822
94.8	1373	1.5	10.33	B123	180L6	23356	6673
93.4	1394	3.4	10.49	B153	180L6	42116	42116
90.4	1440	2.2	10.84	B143	180L6	23641	23641
86.6	1489	2.1	17.04	B143	160LA4	23893	23893

5.1 B/BA MOTORIDUTTORE (50Hz)

15.00 kW

n2 [rpm]	M2 [Nm]	fs	i	Riduttore	Motore	Fr2 D-S-P [N]	Fr2 C [N]
85.4	1510	0.9	17.27	B103	160LA4	17301	4943
82.6	1577	2.1	11.87	B143	180L6	24062	24062
79.5	1622	3.7	18.56	B153	160LA4	44196	44196
79.4	1624	1.4	18.58	B123	160LA4	23995	6856
79.1	1631	2.2	18.66	B143	160LA4	24312	24312
78.5	1658	1.3	12.48	B123	180L6	23952	6843
77.5	1680	2.8	12.64	B153	180L6	44499	44499
71.7	1797	3.6	20.56	B153	160LA4	45545	45545
71.6	1801	1.4	20.61	B123	160LA4	24275	6936
70.8	1840	1.2	13.84	B123	180L6	24218	6920
70.2	1835	2.2	21.00	B143	160LA4	24832	24832
69.9	1862	2.8	14.01	B153	180L6	45852	45852
67.7	1925	1.7	14.49	B143	180L6	24931	24931
64.8	1990	2.2	22.77	B143	160LA4	25171	25171
64.7	1991	1.4	22.78	B123	160LA4	24497	6999
63.7	2044	1.1	15.38	B123	180L6	24435	6981
63.6	2046	2.6	15.40	B153	180L6	47121	47121
61.8	2085	3.2	23.86	B153	160LA4	47544	47544
58.6	2202	3.1	25.19	B153	160LA4	48287	48287
57.6	2240	2.1	25.63	B143	160LA4	25627	25627
57.5	2264	1.5	17.04	B143	180L6	25559	25559
57.0	2263	1.2	25.89	B123	160LA4	24699	7057
53.7	2399	1.9	27.44	B143	160LA4	25870	25870
53.6	2405	1.2	27.51	B123	160LA4	24758	7074
52.8	2468	0.9	18.58	B123	180L6	24657	7045
52.8	2465	2.6	18.56	B153	180L6	49686	49686
52.5	2479	1.5	18.66	B143	180L6	25869	25869
52.2	2468	3.2	28.23	B153	160LA4	49873	49873
49.1	2626	1.8	30.05	B143	160LA4	26162	26162
48.6	2653	3.0	30.35	B153	160LA4	50894	50894
47.9	2692	1.0	30.79	B123	160LA4	24796	7085
47.7	2732	2.5	20.56	B153	180L6	51133	51133
47.6	2738	1.0	20.61	B123	180L6	24671	7049
47.2	2733	1.0	31.26	B123	160LA4	24794	7084
46.7	2790	1.5	21.00	B143	180L6	26220	26220
44.7	2885	1.6	33.01	B143	160LA4	26424	26424
44.7	2916	3.7	21.94	B163	180L6	80000	65000
43.9	2940	2.7	33.63	B153	160LA4	52362	52362
43.1	2994	4.0	34.25	B163	160LA4	80000	65000
43.0	3027	1.0	22.78	B123	180L6	24597	7028
43.0	3026	1.5	22.77	B143	180L6	26421	26421
42.5	3032	0.9	34.68	B123	160LA4	24722	7063
42.1	3061	2.6	35.02	B153	160LA4	52944	52944
41.1	3170	2.2	23.86	B153	180L6	53262	53262
40.5	3212	3.4	24.17	B163	180L6	80000	65000

5.1 B/BA MOTORIDUTTORE (50Hz)

15.00 kW

n2 [rpm]	M2 [Nm]	fs	i	Riduttore	Motore	Fr2 D-S-P [N]	Fr2 C [N]
40.2	3205	1.5	36.67	B143	160LA4	26662	26662
39.2	3292	3.7	37.66	B163	160LA4	80000	65000
38.9	3347	2.1	25.19	B153	180L6	54049	54049
38.2	3405	1.4	25.63	B143	180L6	26644	26644
38.0	3392	2.4	38.81	B153	160LA4	54439	54439
36.9	3531	3.3	26.58	B163	180L6	80000	65000
36.6	3522	1.4	40.29	B143	160LA4	26816	26816
36.3	3553	3.6	40.65	B163	160LA4	80000	65000
35.7	3646	1.3	27.44	B143	180L6	26732	26732
34.9	3697	2.2	42.30	B153	160LA4	55704	55704
34.7	3751	2.2	28.23	B153	180L6	55717	55717
34.0	3827	2.8	28.80	B163	180L6	80000	65000
33.4	3860	1.2	44.16	B143	160LA4	26906	26906
32.7	3941	3.0	45.09	B163	160LA4	80000	65000
32.6	3992	1.2	30.05	B143	180L6	26793	26793
32.3	4032	2.1	30.35	B153	180L6	56783	56783
31.7	4109	2.9	30.92	B163	180L6	80000	65000
31.0	4155	1.9	47.53	B153	160LA4	57433	57433
30.5	4226	1.2	48.35	B143	160LA4	26929	26929
29.7	4386	1.1	33.01	B143	180L6	26783	26783
29.2	4419	1.8	50.56	B153	160LA4	58353	58353
29.1	4469	1.9	33.63	B153	180L6	58306	58306
28.9	4458	2.9	51.00	B163	160LA4	80000	65000
28.6	4551	2.7	34.25	B163	180L6	80000	65000
28.0	4653	1.8	35.02	B153	180L6	58905	58905
27.7	4646	1.1	53.16	B143	160LA4	26873	26873
27.5	4688	2.8	53.63	B163	160LA4	80000	65000
27.0	4775	1.0	54.63	B143	160LA4	26840	26840
27.0	4776	1.7	54.64	B153	160LA4	59512	59512
26.7	4873	1.0	36.67	B143	180L6	26671	26671
26.0	5004	2.6	37.66	B163	180L6	80000	65000
25.8	5006	1.6	57.27	B153	160LA4	60215	60215
25.3	5156	1.6	38.81	B153	180L6	60434	60434
25.0	5158	1.0	59.02	B143	160LA4	26703	26703
25.0	5154	2.5	58.97	B163	160LA4	80000	65000
24.3	5353	0.9	40.29	B143	180L6	26469	26469
24.2	5325	1.5	60.92	B153	160LA4	61139	61139
24.1	5402	2.5	40.65	B163	180L6	80000	65000
23.2	5620	1.5	42.30	B153	180L6	61713	61713
23.2	5548	1.4	63.47	B153	160LA4	61750	61750
21.7	5991	2.1	45.09	B163	180L6	80000	65000
21.1	6099	2.1	69.78	B163	160LA4	80000	65000
20.7	6219	1.3	71.15	B153	160LA4	63449	63449
20.6	6316	1.3	47.53	B153	180L6	63440	63440
19.4	6718	1.3	50.56	B153	180L6	64347	64347

5.1 B/BA MOTORIDUTTORE (50Hz)

15.00 kW

n2 [rpm]	M2 [Nm]	fs	i	Riduttore	Motore	Fr2 D-S-P [N]	Fr2 C [N]
19.2	6776	2.0	51.00	B163	180L6	80000	65000
19.2	6706	1.9	76.72	B163	160LA4	80000	65000
19.1	6750	1.2	77.22	B153	160LA4	64660	64660
18.3	7126	1.9	53.63	B163	180L6	80000	65000
17.9	7260	1.2	54.64	B153	180L6	65000	65000
17.6	7332	1.1	83.89	B153	160LA4	65000	65000
17.1	7610	1.1	57.27	B153	180L6	65000	65000
16.9	7651	1.7	87.54	B163	160LA4	80000	65000
16.8	7661	1.0	87.65	B153	160LA4	65000	65000
16.6	7835	1.7	58.97	B163	180L6	80000	65000
16.1	8095	1.0	60.92	B153	180L6	65000	65000
15.9	8133	1.0	93.05	B153	160LA4	65000	65000
15.4	8434	1.0	63.47	B153	180L6	65000	65000
15.3	8413	1.5	96.25	B163	160LA4	80000	65000
14.2	9084	1.4	103.93	B163	160LA4	80000	65000
14.0	9271	1.5	69.78	B163	180L6	80000	65000
12.9	9988	1.3	114.27	B163	160LA4	80000	65000
12.8	10194	1.3	76.72	B163	180L6	80000	65000
11.7	11038	1.2	126.29	B163	160LA4	80000	65000
11.2	11631	1.2	87.54	B163	180L6	80000	65000
10.6	12137	1.1	138.85	B163	160LA4	80000	65000
10.2	12788	1.1	96.25	B163	180L6	80000	65000
9.5	13533	1.0	154.83	B163	160LA4	80000	65000
9.4	13809	1.0	103.93	B163	180L6	80000	65000

18.50 kW

n2 [rpm]	M2 [Nm]	fs	i	Riduttore	Motore	Fr2 D-S-P [N]	Fr2 C [N]
184.5	862	1.7	7.97	B123	180M4	19856	5673
152.8	1041	1.7	9.62	B123	180M4	20563	5875
142.2	1118	1.8	10.33	B123	180M4	20814	5947
140.1	1135	4.0	10.49	B153	180M4	36966	36966
135.6	1172	2.6	10.84	B143	180M4	20959	20959
123.9	1284	2.4	11.87	B143	180M4	21354	21354
117.8	1350	1.5	12.48	B123	180M4	21414	6118
116.3	1367	3.3	12.64	B153	180M4	39075	39075
106.2	1498	1.4	13.84	B123	180M4	21698	6200
104.9	1515	3.3	14.01	B153	180M4	40275	40275
101.5	1567	2.0	14.49	B143	180M4	22181	22181
95.6	1664	1.3	15.38	B123	180M4	21945	6270
95.5	1666	3.0	15.40	B153	180M4	41402	41402
93.4	1719	2.7	10.49	B153	200LA6	41639	41639
90.4	1776	1.8	10.84	B143	200LA6	22569	22569
86.3	1843	1.7	17.04	B143	180M4	22796	22796

5.1 B/BA MOTORIDUTTORE (50Hz)

18.50 kW

n2 [rpm]	M2 [Nm]	fs	i	Riduttore	Motore	Fr2 D-S-P [N]	Fr2 C [N]
82.6	1945	1.7	11.87	B143	200LA6	22889	22889
79.2	2007	3.0	18.56	B153	180M4	43683	43683
79.1	2009	1.1	18.58	B123	180M4	22258	6359
78.8	2018	1.8	18.66	B143	180M4	23109	23109
77.5	2072	2.3	12.64	B153	200LA6	43924	43924
71.5	2224	2.9	20.56	B153	180M4	44973	44973
71.3	2229	1.1	20.61	B123	180M4	22345	6384
70.0	2271	1.8	21.00	B143	180M4	23476	23476
69.9	2296	2.3	14.01	B153	200LA6	45215	45215
67.7	2374	1.4	14.49	B143	200LA6	23498	23498
64.6	2463	1.8	22.77	B143	180M4	23698	23698
64.5	2464	1.1	22.78	B123	180M4	22361	6389
63.6	2524	2.1	15.40	B153	200LA6	46421	46421
61.6	2581	2.6	23.86	B153	180M4	46874	46874
59.8	2685	3.9	16.39	B163	200LA6	75172	65000
58.4	2724	2.5	25.19	B153	180M4	47578	47578
57.5	2793	1.2	17.04	B143	200LA6	23873	23873
57.4	2772	1.7	25.63	B143	180M4	23967	23967
56.8	2800	1.0	25.89	B123	180M4	22268	6362
55.3	2875	3.9	26.58	B163	180M4	76928	65000
54.4	2952	3.7	18.02	B163	200LA6	77244	65000
53.6	2968	1.5	27.44	B143	180M4	24090	24090
53.4	2976	0.9	27.51	B123	180M4	22173	6335
52.8	3041	2.1	18.56	B153	200LA6	48842	48842
52.5	3057	1.2	18.66	B143	200LA6	24024	24024
52.1	3054	2.6	28.23	B153	180M4	49073	49073
51.0	3115	3.3	28.80	B163	180M4	78709	65000
49.1	3270	3.4	19.96	B163	200LA6	79518	65000
48.9	3250	1.4	30.05	B143	180M4	24210	24210
48.4	3283	2.4	30.35	B153	180M4	50031	50031
47.7	3370	2.0	20.56	B153	200LA6	50198	50198
47.5	3345	3.4	30.92	B163	180M4	80000	65000
46.7	3441	1.2	21.00	B143	200LA6	24143	24143
44.7	3596	3.0	21.94	B163	200LA6	80000	65000
44.5	3571	1.3	33.01	B143	180M4	24278	24278
43.7	3638	2.2	33.63	B153	180M4	51401	51401
43.0	3732	1.2	22.77	B143	200LA6	24169	24169
42.9	3705	3.2	34.25	B163	180M4	80000	65000
42.0	3788	2.1	35.02	B153	180M4	51942	51942
41.1	3910	1.8	23.86	B153	200LA6	52177	52177
40.5	3961	2.8	24.17	B163	200LA6	80000	65000
40.1	3967	1.2	36.67	B143	180M4	24274	24274
39.0	4074	3.0	37.66	B163	180M4	80000	65000
38.9	4128	1.7	25.19	B153	200LA6	52903	52903
38.2	4200	1.2	25.63	B143	200LA6	24110	24110

5.1 B/BA MOTORIDUTTORE (50Hz)

18.50 kW

n2 [rpm]	M2 [Nm]	fs	i	Riduttore	Motore	Fr2 D-S-P [N]	Fr2 C [N]
37.9	4198	1.9	38.81	B153	180M4	53324	53324
36.9	4355	2.7	26.58	B163	200LA6	80000	65000
36.5	4358	1.1	40.29	B143	180M4	24190	24190
36.2	4397	2.9	40.65	B163	180M4	80000	65000
35.7	4497	1.1	27.44	B143	200LA6	24018	24018
34.8	4575	1.7	42.30	B153	180M4	54484	54484
34.7	4626	1.8	28.23	B153	200LA6	54433	54433
34.0	4720	2.3	28.80	B163	200LA6	80000	65000
33.3	4777	1.0	44.16	B143	180M4	24025	24025
32.6	4924	1.0	30.05	B143	200LA6	23821	23821
32.6	4877	2.5	45.09	B163	180M4	80000	65000
32.3	4973	1.7	30.35	B153	200LA6	55403	55403
31.7	5068	2.4	30.92	B163	200LA6	80000	65000
30.9	5142	1.6	47.53	B153	180M4	56057	56057
30.4	5230	1.0	48.35	B143	180M4	23772	23772
29.7	5409	0.9	33.01	B143	200LA6	23518	23518
29.1	5512	1.5	33.63	B153	200LA6	56776	56776
29.1	5469	1.5	50.56	B153	180M4	56886	56886
28.8	5517	2.4	51.00	B163	180M4	80000	65000
28.6	5613	2.2	34.25	B163	200LA6	80000	65000
28.0	5738	1.5	35.02	B153	200LA6	57313	57313
27.4	5801	2.2	53.63	B163	180M4	80000	65000
26.9	5910	1.4	54.64	B153	180M4	57922	57922
26.0	6172	2.1	37.66	B163	200LA6	80000	65000
25.7	6195	1.3	57.27	B153	180M4	58546	58546
25.3	6360	1.3	38.81	B153	200LA6	58669	58669
24.9	6378	2.0	58.97	B163	180M4	80000	65000
24.1	6590	1.2	60.92	B153	180M4	59360	59360
24.1	6662	2.0	40.65	B163	200LA6	80000	65000
23.2	6931	1.2	42.30	B153	200LA6	59789	59789
23.2	6866	1.2	63.47	B153	180M4	59896	59896
21.7	7389	1.7	45.09	B163	200LA6	80000	65000
21.1	7547	1.7	69.78	B163	180M4	80000	65000
20.7	7696	1.0	71.15	B153	180M4	61364	61364
20.6	7789	1.1	47.53	B153	200LA6	61278	61278
19.4	8286	1.0	50.56	B153	200LA6	62047	62047
19.2	8358	1.6	51.00	B163	200LA6	80000	65000
19.2	8298	1.6	76.72	B163	180M4	80000	65000
19.0	8353	1.0	77.22	B153	180M4	62391	62391
18.3	8788	1.6	53.63	B163	200LA6	80000	65000
17.9	8954	0.9	54.64	B153	200LA6	62991	62991
16.8	9469	1.4	87.54	B163	180M4	80000	65000
16.6	9663	1.4	58.97	B163	200LA6	80000	65000
15.3	10411	1.2	96.25	B163	180M4	80000	65000
14.1	11242	1.2	103.93	B163	180M4	80000	65000

5.1 B/BA MOTORIDUTTORE (50Hz)

18.50 kW

n2 [rpm]	M2 [Nm]	fs	i	Riduttore	Motore	Fr2 D-S-P [N]	Fr2 C [N]
14.0	11434	1.2	69.78	B163	200LA6	80000	65000
12.9	12361	1.1	114.27	B163	180M4	80000	65000
12.8	12572	1.1	76.72	B163	200LA6	80000	65000
11.6	13660	1.0	126.29	B163	180M4	80000	65000
11.2	14345	1.0	87.54	B163	200LA6	80000	65000

22.00 kW

n2 [rpm]	M2 [Nm]	fs	i	Riduttore	Motore	Fr2 D-S-P [N]	Fr2 C [N]
184.5	1025	1.5	7.97	B123	180L4	19106	5459
152.8	1237	1.5	9.62	B123	180L4	19658	5617
142.2	1329	1.5	10.33	B123	180L4	19842	5669
140.1	1350	3.3	10.49	B153	180L4	36651	36651
135.6	1394	2.2	10.84	B143	180L4	20251	20251
123.9	1527	2.0	11.87	B143	180L4	20579	20579
117.8	1605	1.2	12.48	B123	180L4	20241	5783
116.3	1626	2.8	12.64	B153	180L4	38696	38696
106.2	1781	1.2	13.84	B123	180L4	20396	5827
104.9	1802	2.8	14.01	B153	180L4	39855	39855
101.5	1863	1.7	14.49	B143	180L4	21235	21235
95.6	1979	1.1	15.38	B123	180L4	20498	5856
95.5	1981	2.5	15.40	B153	180L4	40939	40939
93.4	2045	2.3	10.49	B153	200LB6	41162	41162
90.4	2112	1.5	10.84	B143	200LB6	21497	21497
86.3	2192	1.5	17.04	B143	180L4	21684	21684
82.6	2313	1.4	11.87	B143	200LB6	21715	21715
82.6	2313	3.5	11.87	B163	200LB6	67760	65000
79.2	2387	2.5	18.56	B153	180L4	43126	43126
79.1	2389	0.9	18.58	B123	180L4	20510	5860
78.8	2400	1.5	18.66	B143	180L4	21891	21891
77.5	2464	1.9	12.64	B153	200LB6	43349	43349
76.5	2496	3.7	12.81	B163	200LB6	69268	65000
71.5	2645	2.5	20.56	B153	180L4	44355	44355
71.3	2651	0.9	20.61	B123	180L4	20406	5830
70.0	2701	1.5	21.00	B143	180L4	22105	22105
69.9	2730	1.9	14.01	B153	200LB6	44578	44578
69.6	2745	3.7	14.08	B163	200LB6	71175	65000
67.7	2823	1.2	14.49	B143	200LB6	22065	22065
67.0	2823	3.7	21.94	B163	180L4	71998	65000
64.6	2929	1.5	22.77	B143	180L4	22211	22211
64.5	2930	1.0	22.78	B123	180L4	20218	5777
63.6	3001	1.7	15.40	B153	200LB6	45720	45720
63.1	3025	3.5	15.52	B163	200LB6	73163	65000
61.6	3069	2.2	23.86	B153	180L4	46158	46158

5.1 B/BA MOTORIDUTTORE (50Hz)

22.00 kW

n2 [rpm]	M2 [Nm]	fs	i	Riduttore	Motore	Fr2 D-S-P [N]	Fr2 C [N]
60.8	3109	3.4	24.17	B163	180L4	73993	65000
59.8	3193	3.3	16.39	B163	200LB6	74284	65000
58.4	3240	2.1	25.19	B153	180L4	46821	46821
57.5	3321	1.0	17.04	B143	200LB6	22188	22188
57.4	3297	1.4	25.63	B143	180L4	22294	22294
55.3	3419	3.2	26.58	B163	180L4	75978	65000
54.4	3511	3.1	18.02	B163	200LB6	76268	65000
53.6	3530	1.3	27.44	B143	180L4	22298	22298
52.8	3616	1.7	18.56	B153	200LB6	47998	47998
52.5	3636	1.0	18.66	B143	200LB6	22178	22178
52.1	3631	2.2	28.23	B153	180L4	48226	48226
51.0	3705	2.8	28.80	B163	180L4	77679	65000
49.1	3889	2.9	19.96	B163	200LB6	78437	65000
48.9	3865	1.2	30.05	B143	180L4	22249	22249
48.4	3904	2.0	30.35	B153	180L4	49120	49120
47.7	4007	1.7	20.56	B153	200LB6	49263	49263
47.5	3978	2.9	30.92	B163	180L4	79200	65000
46.7	4092	1.0	21.00	B143	200LB6	22067	22067
44.7	4276	2.6	21.94	B163	200LB6	80000	65000
44.5	4246	1.1	33.01	B143	180L4	22123	22123
43.7	4326	1.8	33.63	B153	180L4	50392	50392
43.0	4438	1.0	22.77	B143	200LB6	21916	21916
42.9	4406	2.7	34.25	B163	180L4	80000	65000
42.0	4504	1.8	35.02	B153	180L4	50891	50891
41.1	4649	1.5	23.86	B153	200LB6	51092	51092
40.5	4711	2.3	24.17	B163	200LB6	80000	65000
40.1	4717	1.0	36.67	B143	180L4	21880	21880
39.0	4845	2.5	37.66	B163	180L4	80000	65000
38.9	4908	1.5	25.19	B153	200LB6	51758	51758
38.2	4994	1.0	25.63	B143	200LB6	21575	21575
37.9	4992	1.6	38.81	B153	180L4	52159	52159
36.9	5179	2.3	26.58	B163	200LB6	80000	65000
36.5	5183	0.9	40.29	B143	180L4	21560	21560
36.2	5229	2.4	40.65	B163	180L4	80000	65000
35.7	5348	0.9	27.44	B143	200LB6	21303	21303
34.8	5441	1.5	42.30	B153	180L4	53215	53215
34.7	5502	1.5	28.23	B153	200LB6	53149	53149
34.0	5612	1.9	28.80	B163	200LB6	80000	65000
32.6	5800	2.1	45.09	B163	180L4	80000	65000
32.3	5914	1.4	30.35	B153	200LB6	54023	54023
31.7	6026	2.0	30.92	B163	200LB6	80000	65000
30.9	6114	1.3	47.53	B153	180L4	54630	54630
29.1	6504	1.2	50.56	B153	180L4	55368	55368
29.1	6554	1.3	33.63	B153	200LB6	55246	55246
28.8	6560	2.0	51.00	B163	180L4	80000	65000

5.1 B/BA MOTORIDUTTORE (50Hz)

22.00 kW

n2 [rpm]	M2 [Nm]	fs	i	Riduttore	Motore	Fr2 D-S-P [N]	Fr2 C [N]
28.6	6675	1.9	34.25	B163	200LB6	80000	65000
28.0	6824	1.2	35.02	B153	200LB6	55720	55720
27.4	6898	1.9	53.63	B163	180L4	80000	65000
26.9	7029	1.1	54.64	B153	180L4	56282	56282
26.0	7339	1.8	37.66	B163	200LB6	80000	65000
25.7	7367	1.1	57.27	B153	180L4	56827	56827
25.3	7563	1.1	38.81	B153	200LB6	56904	56904
24.9	7585	1.7	58.97	B163	180L4	80000	65000
24.1	7837	1.0	60.92	B153	180L4	57531	57531
24.1	7922	1.7	40.65	B163	200LB6	80000	65000
23.2	8242	1.0	42.30	B153	200LB6	57866	57866
23.2	8164	1.0	63.47	B153	180L4	57990	57990
21.7	8787	1.4	45.09	B163	200LB6	80000	65000
21.1	8975	1.4	69.78	B163	180L4	80000	65000
20.6	9263	0.9	47.53	B153	200LB6	59116	59116
19.2	9939	1.4	51.00	B163	200LB6	80000	65000
19.2	9868	1.3	76.72	B163	180L4	80000	65000
18.3	10451	1.3	53.63	B163	200LB6	80000	65000
16.8	11260	1.2	87.54	B163	180L4	80000	65000
16.6	11491	1.2	58.97	B163	200LB6	80000	65000
15.3	12380	1.1	96.25	B163	180L4	80000	65000
14.1	13369	1.0	103.93	B163	180L4	80000	65000
14.0	13598	1.0	69.78	B163	200LB6	80000	65000
12.8	14951	0.9	76.72	B163	200LB6	80000	65000

30.00 kW

n2 [rpm]	M2 [Nm]	fs	i	Riduttore	Motore	Fr2 D-S-P [N]	Fr2 C [N]
140.6	1834	2.5	10.49	B153	200L4	35897	35897
136.1	1895	1.6	10.84	B143	200L4	18627	18627
124.3	2075	1.5	11.87	B143	200L4	18802	18802
124.3	2075	3.7	11.87	B163	200L4	59114	59114
116.7	2210	2.0	12.64	B153	200L4	37793	37793
115.2	2239	3.9	12.81	B163	200L4	60424	60424
105.3	2449	2.0	14.01	B153	200L4	38858	38858
104.7	2462	3.9	14.08	B163	200L4	62080	62080
101.8	2532	1.2	14.49	B143	200L4	19071	19071
95.8	2692	1.9	15.40	B153	200L4	39847	39847
95.0	2713	3.7	15.52	B163	200L4	63806	63806
90.0	2864	3.5	16.39	B163	200L4	64778	64778
86.6	2979	1.1	17.04	B143	200L4	19141	19141
81.9	3149	3.3	18.02	B163	200L4	66499	65000
79.5	3244	1.8	18.56	B153	200L4	41817	41817
79.1	3262	1.1	18.66	B143	200L4	19109	19109

5.1 B/BA MOTORIDUTTORE (50Hz)

30.00 kW

n2 [rpm]	M2 [Nm]	fs	i	Riduttore	Motore	Fr2 D-S-P [N]	Fr2 C [N]
73.9	3489	3.1	19.96	B163	200L4	68378	65000
71.7	3595	1.8	20.56	B153	200L4	42908	42908
70.2	3670	1.1	21.00	B143	200L4	18978	18978
67.2	3836	2.7	21.94	B163	200L4	70141	65000
64.8	3981	1.1	22.77	B143	200L4	18821	18821
61.8	4171	1.6	23.86	B153	200L4	44485	44485
61.0	4226	2.5	24.17	B163	200L4	71953	65000
58.6	4403	1.5	25.19	B153	200L4	45057	45057
57.6	4480	1.0	25.63	B143	200L4	18481	18481
55.5	4646	2.4	26.58	B163	200L4	73741	65000
53.7	4797	1.0	27.44	B143	200L4	18218	18218
52.2	4935	1.6	28.23	B153	200L4	46253	46253
51.2	5035	2.0	28.80	B163	200L4	75261	65000
48.6	5305	1.5	30.35	B153	200L4	47002	47002
47.7	5406	2.1	30.92	B163	200L4	76609	65000
43.9	5879	1.4	33.63	B153	200L4	48050	48050
43.1	5988	2.0	34.25	B163	200L4	78546	65000
42.1	6122	1.3	35.02	B153	200L4	48454	48454
39.2	6584	1.9	37.66	B163	200L4	80000	65000
38.0	6784	1.2	38.81	B153	200L4	49463	49463
36.3	7107	1.8	40.65	B163	200L4	80000	65000
34.9	7394	1.1	42.30	B153	200L4	50281	50281
32.7	7883	1.5	45.09	B163	200L4	80000	65000
31.0	8309	1.0	47.53	B153	200L4	51338	51338
29.2	8839	0.9	50.56	B153	200L4	51870	51870
28.9	8915	1.5	51.00	B163	200L4	80000	65000
27.5	9375	1.4	53.63	B163	200L4	80000	65000
25.0	10308	1.3	58.97	B163	200L4	80000	65000
21.1	12198	1.1	69.78	B163	200L4	80000	65000
19.2	13411	1.0	76.72	B163	200L4	80000	65000

37.00 kW

n2 [rpm]	M2 [Nm]	fs	i	Riduttore	Motore	Fr2 D-S-P [N]	Fr2 C [N]
167.0	1904	3.6	8.89	B163	225S4	53581	53581
141.5	2247	2.0	10.49	B153	225S4	35205	35205
140.4	2265	3.5	10.58	B163	225S4	56303	56303
125.1	2542	3.0	11.87	B163	225S4	58158	58158
117.5	2707	1.7	12.64	B153	225S4	36972	36972
115.9	2743	3.2	12.81	B163	225S4	59400	59400
106.0	3000	1.7	14.01	B153	225S4	37955	37955
105.4	3016	3.2	14.08	B163	225S4	60964	60964
96.4	3298	1.5	15.40	B153	225S4	38861	38861
95.7	3324	3.0	15.52	B163	225S4	62586	62586

5.1 B/BA MOTORIDUTTORE (50Hz)

37.00 kW

n2 [rpm]	M2 [Nm]	fs	i	Riduttore	Motore	Fr2 D-S-P [N]	Fr2 C [N]
90.6	3509	2.8	16.39	B163	225S4	63497	63497
82.4	3858	2.7	18.02	B163	225S4	65101	65000
80.0	3974	1.5	18.56	B153	225S4	40642	40642
74.4	4274	2.5	19.96	B163	225S4	66841	65000
72.2	4404	1.5	20.56	B153	225S4	41614	41614
67.7	4699	2.2	21.94	B163	225S4	68462	65000
62.2	5109	1.3	23.86	B153	225S4	42995	42995
61.4	5177	2.0	24.17	B163	225S4	70115	65000
59.0	5394	1.3	25.19	B153	225S4	43489	43489
55.9	5692	2.0	26.58	B163	225S4	71732	65000
52.6	6046	1.3	28.23	B153	225S4	44505	44505
51.6	6168	1.7	28.80	B163	225S4	73094	65000
48.9	6499	1.2	30.35	B153	225S4	45129	45129
48.0	6622	1.7	30.92	B163	225S4	74292	65000
44.2	7203	1.1	33.63	B153	225S4	45983	45983
43.4	7335	1.6	34.25	B163	225S4	75993	65000
42.4	7499	1.1	35.02	B153	225S4	46306	46306
39.4	8065	1.5	37.66	B163	225S4	77542	65000
38.3	8311	1.0	38.81	B153	225S4	47092	47092
36.5	8706	1.5	40.65	B163	225S4	78763	65000
32.9	9656	1.2	45.09	B163	225S4	80000	65000
29.1	10922	1.2	51.00	B163	225S4	80000	65000
27.7	11485	1.1	53.63	B163	225S4	80000	65000
25.2	12627	1.0	58.97	B163	225S4	80000	65000

45.00 kW

n2 [rpm]	M2 [Nm]	fs	i	Riduttore	Motore	Fr2 D-S-P [N]	Fr2 C [N]
167.0	2316	2.9	8.89	B163	225M4	52862	52862
141.5	2733	1.6	10.49	B153	225M4	34492	34492
140.4	2754	2.9	10.58	B163	225M4	55447	55447
125.1	3091	2.5	11.87	B163	225M4	57198	57198
117.5	3293	1.4	12.64	B153	225M4	36114	36114
115.9	3336	2.6	12.81	B163	225M4	58364	58364
106.0	3649	1.4	14.01	B153	225M4	37003	37003
105.4	3668	2.6	14.08	B163	225M4	59825	59825
96.4	4011	1.2	15.40	B153	225M4	37815	37815
95.7	4043	2.5	15.52	B163	225M4	61331	61331
90.6	4268	2.3	16.39	B163	225M4	62171	62171
82.4	4692	2.2	18.02	B163	225M4	63643	63643
80.0	4833	1.2	18.56	B153	225M4	39382	39382
74.4	5198	2.1	19.96	B163	225M4	65226	65000
72.2	5356	1.2	20.56	B153	225M4	40217	40217
67.7	5715	1.8	21.94	B163	225M4	66687	65000

5.1 B/BA MOTORIDUTTORE (50Hz)

45.00 kW

n2 [rpm]	M2 [Nm]	fs	i	Riduttore	Motore	Fr2 D-S-P [N]	Fr2 C [N]
62.2	6214	1.1	23.86	B153	225M4	41375	41375
61.4	6296	1.7	24.17	B163	225M4	68160	65000
59.0	6560	1.0	25.19	B153	225M4	41778	41778
55.9	6922	1.6	26.58	B163	225M4	69582	65000
52.6	7353	1.1	28.23	B153	225M4	42587	42587
51.6	7501	1.4	28.80	B163	225M4	70764	65000
48.9	7904	1.0	30.35	B153	225M4	43068	43068
48.0	8054	1.4	30.92	B163	225M4	71790	65000
44.2	8760	0.9	33.63	B153	225M4	43698	43698
43.4	8921	1.3	34.25	B163	225M4	73222	65000
39.4	9809	1.3	37.66	B163	225M4	74495	65000
36.5	10588	1.2	40.65	B163	225M4	75474	65000
32.9	11744	1.0	45.09	B163	225M4	76723	65000
29.1	13283	1.0	51.00	B163	225M4	78067	65000
27.7	13968	0.9	53.63	B163	225M4	78565	65000

55.00 kW

n2 [rpm]	M2 [Nm]	fs	i	Riduttore	Motore	Fr2 D-S-P [N]	Fr2 C [N]
167.0	2831	2.4	8.89	B163	250M4	51963	51963
140.4	3367	2.3	10.58	B163	250M4	54378	54378
125.1	3778	2.0	11.87	B163	250M4	55998	55998
115.9	4078	2.2	12.81	B163	250M4	57069	57069
105.4	4483	2.1	14.08	B163	250M4	58401	58401
95.7	4941	2.0	15.52	B163	250M4	59761	59761
90.6	5216	1.9	16.39	B163	250M4	60514	60514
82.4	5735	1.8	18.02	B163	250M4	61821	61821
74.4	6353	1.7	19.96	B163	250M4	63208	63208
67.7	6985	1.5	21.94	B163	250M4	64468	64468
61.4	7695	1.4	24.17	B163	250M4	65715	65000
55.9	8461	1.3	26.58	B163	250M4	66894	65000
51.6	9168	1.1	28.80	B163	250M4	67852	65000
48.0	9844	1.2	30.92	B163	250M4	68663	65000
43.4	10904	1.1	34.25	B163	250M4	69758	65000
39.4	11989	1.0	37.66	B163	250M4	70686	65000
36.5	12941	1.0	40.65	B163	250M4	71363	65000

75.00 kW

n2 [rpm]	M2 [Nm]	fs	i	Riduttore	Motore	Fr2 D-S-P [N]	Fr2 C [N]
167.0	3860	1.8	8.89	B163	280S4	50164	50164
140.4	4591	1.7	10.58	B163	280S4	52239	52239
125.1	5152	1.5	11.87	B163	280S4	53597	53597

5.1 B/BA MOTORIDUTTORE (50Hz)

75.00 kW

n2 [rpm]	M2 [Nm]	fs	i	Riduttore	Motore	Fr2 D-S-P [N]	Fr2 C [N]
115.9	5560	1.6	12.81	B163	280S4	54478	54478
105.4	6113	1.6	14.08	B163	280S4	55553	55553
95.7	6738	1.5	15.52	B163	280S4	56622	56622
90.6	7113	1.4	16.39	B163	280S4	57200	57200
82.4	7821	1.3	18.02	B163	280S4	58177	58177
67.7	9526	1.1	21.94	B163	280S4	60029	60029
61.4	10493	1.0	24.17	B163	280S4	60826	60826
55.9	11537	1.0	26.58	B163	280S4	61519	61519

90.00 kW

n2 [rpm]	M2 [Nm]	fs	i	Riduttore	Motore	Fr2 D-S-P [N]	Fr2 C [N]
167.0	4632	1.5	8.89	B163	280M4	48815	48815
140.4	5509	1.4	10.58	B163	280M4	50635	50635
125.1	6183	1.2	11.87	B163	280M4	51797	51797
115.9	6672	1.3	12.81	B163	280M4	52535	52535
105.4	7336	1.3	14.08	B163	280M4	53416	53416
95.7	8085	1.2	15.52	B163	280M4	54267	54267
90.6	8536	1.2	16.39	B163	280M4	54714	54714
82.4	9385	1.1	18.02	B163	280M4	55445	55445
67.7	11431	0.9	21.94	B163	280M4	56701	56701

5.2 IB/IBA RIDUTTORE - 1750 RPM

IBA42

Mn_2 [Nm]	i	Pn_1 [kW]	n2 [rpm]	Fr1 [N]	Fr2 D-S-P [N]	Fr2 C [N]
85	7.62	2.14	229.8	373	-	1684
85	10.62	1.54	164.7	355	-	1882
85	12.95	1.26	135.2	406	-	2010
85	14.46	1.13	121.0	443	-	2085
113	16.47	1.32	106.2	579	-	2178
113	22.97	0.95	76.2	355	-	2433
113	28.00	0.78	62.5	406	-	2599
113	31.27	0.70	56.0	443	-	2697
113	33.78	0.64	51.8	458	-	2767
113	47.12	0.46	37.1	355	-	3092
113	57.43	0.38	30.5	406	-	3303
103	64.13	0.31	27.3	406	-	3426
103	78.17	0.26	22.4	406	-	3660

IBA52

Mn_2 [Nm]	i	Pn_1 [kW]	n2 [rpm]	Fr1 [N]	Fr2 D-S-P [N]	Fr2 C [N]
150	7.91	3.67	221.2	373	-	1828
150	9.46	3.07	185.0	414	-	1940
150	11.57	2.51	151.2	405	-	2075
150	14.63	1.98	119.7	392	-	2243
188	17.11	2.12	102.3	529	-	2363
188	20.46	1.77	85.5	414	-	2508
188	25.03	1.45	69.9	405	-	2683
188	31.63	1.15	55.3	392	-	2900
188	35.10	1.03	49.9	446	-	3003
188	41.97	0.86	41.7	414	-	3187
207	51.34	0.78	34.1	445	-	3409
188	64.87	0.56	27.0	356	-	3685
188	79.07	0.46	22.1	406	-	3936

IBA53

Mn_2 [Nm]	i	Pn_1 [kW]	n2 [rpm]	Fr1 [N]	Fr2 D-S-P [N]	Fr2 C [N]
207	73.70	0.57	23.7	472	-	3845
207	93.33	0.45	18.8	472	-	4000
207	111.61	0.38	15.7	472	-	4000
207	136.53	0.31	12.8	472	-	4000
207	172.53	0.24	10.1	472	-	4000
207	197.11	0.21	8.9	472	-	4000
207	249.08	0.17	7.0	472	-	4000
207	271.16	0.16	6.5	472	-	4000
207	342.65	0.12	5.1	472	-	4000

5.2 IB/IBA RIDUTTORE - 1750 RPM

IBA72

Mn_2 [Nm]	i	Pn_1 [kW]	n2 [rpm]	Fr1 [N]	Fr2 D-S-P [N]	Fr2 C [N]
329	8.36	7.59	209.4	664	4715	2357
329	10.06	6.31	174.0	685	5016	2508
329	12.44	5.10	140.6	667	5384	2692
395	14.91	5.11	117.4	826	5718	2859
395	17.94	4.24	97.5	685	6083	3041
395	22.19	3.43	78.8	667	6529	3265
395	27.45	2.77	63.8	667	7009	3504
395	33.04	2.30	53.0	685	7456	3728
376	40.87	1.77	42.8	635	8003	4002
329	45.64	1.39	38.3	646	8303	4152
329	54.94	1.16	31.9	685	8833	4416
329	67.96	0.93	25.8	667	9481	4741

IBA73

Mn_2 [Nm]	i	Pn_1 [kW]	n2 [rpm]	Fr1 [N]	Fr2 D-S-P [N]	Fr2 C [N]
423	43.89	1.96	39.9	330	8196	4098
423	52.83	1.63	33.1	411	8718	4359
423	65.35	1.32	26.8	400	9358	4679
423	80.83	1.07	21.6	400	10000	5023
423	97.29	0.89	18.0	411	10000	5343
423	120.34	0.72	14.5	400	10000	5500
423	149.73	0.58	11.7	398	10000	5500
423	180.23	0.48	9.7	411	10000	5500
423	222.93	0.39	7.8	400	10000	5500
423	260.20	0.33	6.7	424	10000	5500
423	321.85	0.27	5.4	400	10000	5500
423	357.95	0.24	4.9	445	10000	5500
423	442.76	0.19	4.0	400	10000	5500

IB063

Mn_2 [Nm]	i	Pn_1 [kW]	n2 [rpm]	Fr1 [N]	Fr2 D-S-P [N]	Fr2 C [N]
273	5.71	9.71	306.2	367	6520	1863
320	6.88	9.46	254.4	388	6797	1942
329	7.32	9.15	239.0	415	6927	1979
432	9.16	9.61	191.0	375	7105	2030
489	10.26	9.70	170.5	368	7197	2056
508	11.03	9.37	158.7	395	7337	2096
545	12.35	8.98	141.7	428	7536	2153
555	13.15	8.59	133.1	462	7702	2200
555	15.18	7.44	115.3	559	8195	2341
564	17.00	6.75	102.9	618	8562	2446

5.2 IB/IBA RIDUTTORE - 1750 RPM

IB063

Mn_2 [Nm]	i	Pn_1 [kW]	n2 [rpm]	Fr1 [N]	Fr2 D-S-P [N]	Fr2 C [N]
564	22.39	5.13	78.2	756	9618	2748
564	26.09	4.40	67.1	817	10248	2928
564	28.03	4.10	62.4	843	10554	3016
564	33.43	3.43	52.3	899	11338	3240
564	38.58	2.98	45.4	938	12000	3431
564	43.22	2.66	40.5	965	12000	3590
564	50.81	2.26	34.4	999	12000	3827
564	56.93	2.02	30.7	1020	12000	4001
564	69.16	1.66	25.3	1050	12000	4315
564	77.48	1.48	22.6	1065	12000	4508
564	90.33	1.27	19.4	1083	12000	4779
564	101.20	1.13	17.3	1095	12000	4990
564	111.74	1.03	15.7	1104	12000	5180
564	124.20	0.92	14.1	1113	12000	5390
564	139.15	0.83	12.6	1121	12000	5623
564	157.42	0.73	11.1	1129	12000	5887

IB083

Mn_2 [Nm]	i	Pn_1 [kW]	n2 [rpm]	Fr1 [N]	Fr2 D-S-P [N]	Fr2 C [N]
470	7.81	12.25	224.1	1764	11107	3173
564	8.62	13.32	202.9	1657	11159	3188
611	10.49	11.85	166.8	1804	11869	3391
705	11.59	12.39	151.0	1750	11965	3419
761	14.43	10.74	121.3	1916	12849	3671
799	16.60	9.80	105.5	2011	13450	3843
799	18.32	8.88	95.5	2104	14004	4001
799	22.82	7.13	76.7	2281	15298	4371
799	26.71	6.09	65.5	2386	16288	4654
799	29.50	5.52	59.3	2444	16936	4839
799	31.80	5.12	55.0	2484	17443	4984
799	34.49	4.72	50.7	2500	18000	5144
799	39.60	4.11	44.2	2500	18000	5427
799	42.95	3.79	40.7	2500	18000	5600
799	45.44	3.58	38.5	2500	18000	5722
799	51.19	3.18	34.2	2500	18000	5989
799	55.52	2.93	31.5	2500	18000	6177
799	59.96	2.71	29.2	2500	18000	6359
799	63.74	2.55	27.4	2500	18000	6507
799	69.14	2.35	25.3	2500	18000	6710
799	73.14	2.22	23.9	2500	18000	6853
799	80.76	2.01	21.7	2500	18000	7111
799	92.19	1.76	19.0	2500	18000	7470
799	100.57	1.62	17.4	2500	18000	7714

5.2 IB/IBA RIDUTTORE - 1750 RPM

IB083

Mn_2 [Nm]	i	Pn_1 [kW]	n2 [rpm]	Fr1 [N]	Fr2 D-S-P [N]	Fr2 C [N]
799	105.29	1.55	16.6	2500	18000	7846
799	116.25	1.40	15.1	2500	18000	8137
799	126.76	1.28	13.8	2500	18000	8400
799	144.77	1.12	12.1	2500	18000	8818

IB103

Mn_2 [Nm]	i	Pn_1 [kW]	n2 [rpm]	Fr1 [N]	Fr2 D-S-P [N]	Fr2 C [N]
752	8.13	18.84	215.3	1192	13788	3939
846	8.97	19.21	195.2	1157	14044	4012
940	10.92	17.53	160.2	1317	14880	4252
940	12.05	15.88	145.2	1473	15461	4417
1128	14.99	15.33	116.8	1526	16275	4650
1316	17.27	15.52	101.3	1508	16670	4763
1316	19.06	14.06	91.8	1646	17345	4956
1316	23.70	11.31	73.8	1907	18922	5406
1410	26.51	10.83	66.0	1953	19508	5574
1504	30.55	10.02	57.3	2029	20367	5819
1598	33.07	9.84	52.9	2047	20749	5928
1598	35.87	9.07	48.8	2120	21439	6125
1598	41.12	7.91	42.5	2230	22000	6469
1598	44.61	7.29	39.2	2288	22000	6680
1598	47.28	6.88	37.0	2327	22000	6835
1598	50.24	6.48	34.8	2366	22000	7000
1598	53.02	6.14	33.0	2398	22000	7149
1598	58.50	5.56	29.9	2453	22000	7429
1598	64.89	5.01	27.0	2505	22000	7732
1598	68.58	4.74	25.5	2530	22000	7899
1598	72.76	4.47	24.1	2556	22000	8081
1598	78.92	4.12	22.2	2589	22000	8336
1692	83.66	4.12	20.9	2590	22000	8446
1692	92.31	3.73	19.0	2626	22000	8771
1692	105.44	3.27	16.6	2671	22000	9227
1692	114.80	3.00	15.2	2696	22000	9529
1692	120.42	2.86	14.5	2709	22000	9703
1692	132.87	2.59	13.2	2735	22000	10069
1692	144.69	2.38	12.1	2755	22000	10396
1692	165.25	2.08	10.6	2783	22000	10924

IB123

Mn_2 [Nm]	i	Pn_1 [kW]	n2 [rpm]	Fr1 [N]	Fr2 D-S-P [N]	Fr2 C [N]
1410	7.97	36.04	219.7	2647	16004	4572

5.2 IB/IBA RIDUTTORE - 1750 RPM

IB123

Mn_2 [Nm]	i	Pn_1 [kW]	n2 [rpm]	Fr1 [N]	Fr2 D-S-P [N]	Fr2 C [N]
1692	9.62	35.81	181.9	2656	16152	4615
1880	10.33	37.04	169.3	2610	15860	4531
1880	12.48	30.67	140.2	2849	17434	4981
1974	13.84	29.03	126.4	2910	17910	5117
1974	15.38	26.13	113.8	3019	18865	5390
2068	18.58	22.67	94.2	3150	20227	5779
2350	20.61	23.22	84.9	3129	19967	5705
2632	22.78	23.52	76.8	3117	19706	5630
2632	25.89	20.70	67.6	3223	21077	6022
2632	27.51	19.48	63.6	3269	21748	6214
2632	30.79	17.40	56.8	3347	23031	6580
2632	31.26	17.14	56.0	3357	23207	6631
2632	34.68	15.45	50.5	3421	24438	6982
2632	40.53	13.22	43.2	3504	26365	7533
2820	44.89	12.79	39.0	3521	26820	7663
3008	49.80	12.30	35.1	3539	27343	7812
3008	54.30	11.28	32.2	3577	28534	8153
3008	59.36	10.32	29.5	3613	29797	8514
3102	62.59	10.09	28.0	3622	30000	8610
3102	69.43	9.10	25.2	3659	30000	9052
3290	74.42	9.00	23.5	3663	30000	9109
3290	80.04	8.37	21.9	3687	30000	9436
3290	89.87	7.45	19.5	3721	30000	9971
3290	99.70	6.72	17.6	3749	30000	10470
3290	106.65	6.28	16.4	3765	30000	10802
3290	119.60	5.60	14.6	3791	30000	11385
3290	129.96	5.15	13.5	3808	30000	11822
3290	144.43	4.64	12.1	3827	30000	12394
3290	160.23	4.18	10.9	3844	30000	12976
3290	180.40	3.71	9.7	3862	30000	13667

IB143

Mn_2 [Nm]	i	Pn_1 [kW]	n2 [rpm]	Fr1 [N]	Fr2 D-S-P [N]	Fr2 C [N]
2820	10.84	52.97	161.4	2401	14322	14322
2914	11.87	49.99	147.5	2491	14730	14730
2914	14.49	40.96	120.8	2764	16364	16364
3008	17.04	35.94	102.7	2916	17477	17477
3384	18.66	36.93	93.8	2886	17100	17100
3760	21.00	36.46	83.3	2900	17009	17009
4136	22.77	36.98	76.8	2885	16597	16597
4324	25.63	34.35	68.3	2964	17182	17182
4324	27.44	32.08	63.8	3033	17889	17889
4418	30.05	29.94	58.2	3098	18551	18551

5.2 IB/IBA RIDUTTORE - 1750 RPM

IB143

Mn_2 [Nm]	i	Pn_1 [kW]	n2 [rpm]	Fr1 [N]	Fr2 D-S-P [N]	Fr2 C [N]
4418	33.01	27.25	53.0	3179	19580	19580
4512	36.67	25.05	47.7	3245	20470	20470
4512	40.29	22.80	43.4	3313	21570	21570
4512	44.16	20.80	39.6	3374	22675	22675
4700	48.35	19.79	36.2	3404	23201	23201
4700	53.16	18.00	32.9	3458	24414	24414
4700	54.63	17.52	32.0	3473	24770	24770
4700	59.02	16.22	29.6	3512	25798	25798
4700	64.88	14.75	27.0	3557	27093	27093
4700	70.43	13.59	24.9	3592	28249	28249
4700	77.12	12.41	22.7	3627	29562	29562
4700	85.54	11.19	20.5	3664	31114	31114
4700	94.13	10.17	18.6	3695	32591	32591
4700	105.83	9.04	16.5	3729	34468	34468
4700	111.94	8.55	15.6	3744	35392	35392
4700	124.62	7.68	14.0	3770	37208	37208
4700	136.44	7.01	12.8	3790	38793	38793
4700	149.59	6.40	11.7	3809	40000	40000
4700	166.53	5.75	10.5	3829	40000	40000
4700	187.24	5.11	9.3	3848	40000	40000

IB153

Mn_2 [Nm]	i	Pn_1 [kW]	n2 [rpm]	Fr1 [N]	Fr2 D-S-P [N]	Fr2 C [N]
4230	10.49	82.09	166.8	7203	30265	30265
4230	12.64	68.13	138.4	7657	32579	32579
4700	14.01	68.30	124.9	7651	33227	33227
4700	15.40	62.14	113.6	7852	34499	34499
5640	18.56	61.89	94.3	7860	35747	35747
6110	20.56	60.50	85.1	7905	36575	36575
6298	23.86	53.75	73.3	8125	38588	38588
6392	25.19	51.67	69.5	8193	39314	39314
7520	28.23	54.24	62.0	8109	39527	39527
7520	30.35	50.45	57.7	8232	40748	40748
7520	33.63	45.52	52.0	8393	42534	42534
7520	35.02	43.72	50.0	8451	43252	43252
7520	38.81	39.45	45.1	8590	45125	45125
7520	42.30	36.20	41.4	8696	46743	46743
7520	47.53	32.21	36.8	8826	49012	49012
7520	50.56	30.28	34.6	8889	50248	50248
7520	54.64	28.02	32.0	8963	51837	51837
7520	57.27	26.73	30.6	9005	52821	52821
7520	60.92	25.13	28.7	9057	54136	54136
7520	63.47	24.12	27.6	9090	55024	55024

5.2 IB/IBA RIDUTTORE - 1750 RPM

IB153

Mn_2 [Nm]	i	Pn_1 [kW]	n2 [rpm]	Fr1 [N]	Fr2 D-S-P [N]	Fr2 C [N]
7520	71.15	21.52	24.6	9174	57559	57559
7520	77.22	19.83	22.7	9229	59440	59440
7520	83.89	18.25	20.9	9281	61391	61391
7520	87.65	17.47	20.0	9306	62448	62448
7520	93.05	16.46	18.8	9339	63911	63911
7520	103.12	14.85	17.0	9392	65000	65000
7520	123.88	12.36	14.1	9473	65000	65000
7520	134.27	11.40	13.0	9504	65000	65000
7520	149.26	10.26	11.7	9541	65000	65000
7520	165.42	9.26	10.6	9574	65000	65000

IB163

Mn_2 [Nm]	i	Pn_1 [kW]	n2 [rpm]	Fr1 [N]	Fr2 D-S-P [N]	Fr2 C [N]
6392	8.89	146.37	196.8	7268	42738	42738
7426	10.58	142.97	165.5	7338	44107	44107
7238	11.87	124.16	147.4	7730	46651	46651
8272	12.81	131.49	136.6	7578	46354	46354
9024	14.08	130.46	124.3	7599	46974	46974
9400	15.52	123.30	112.8	7748	48363	48363
9306	16.39	115.63	106.8	7908	49696	49696
9776	18.02	110.48	97.1	8015	50972	50972
10058	19.96	102.62	87.7	8179	52815	52815
9776	21.94	90.71	79.8	8428	55548	55548
9870	24.17	83.13	72.4	8585	57740	57740
10434	26.58	79.93	65.8	8652	59139	59139
9588	28.80	67.78	60.8	8905	62694	62694
10810	30.92	71.18	56.6	8835	62446	62446
11186	34.25	66.49	51.1	8932	64581	64581
11562	37.66	62.51	46.5	9015	66599	65000
11938	40.65	59.79	43.0	9072	68159	65000
11280	45.09	50.93	38.8	9256	72405	65000
12220	51.00	48.79	34.3	9301	74583	65000
12220	53.63	46.39	32.6	9351	76188	65000
12220	58.97	42.20	29.7	9439	79289	65000
12220	69.78	35.66	25.1	9575	80000	65000
12220	76.72	32.43	22.8	9642	80000	65000
12220	87.54	28.42	20.0	9726	80000	65000
12220	96.25	25.85	18.2	9779	80000	65000
12220	103.93	23.94	16.8	9819	80000	65000
12220	114.27	21.77	15.3	9864	80000	65000
12220	126.29	19.70	13.9	9907	80000	65000
12220	138.85	17.92	12.6	9944	80000	65000
12220	154.83	16.07	11.3	9983	80000	65000

5.3 IB/IBA RIDUTTORE - 1400 RPM

IBA42

Mn_2 [Nm]	i	Pn_1 [kW]	n2 [rpm]	Fr1 [N]	Fr2 D-S-P [N]	Fr2 C [N]
90	7.62	1.82	183.8	373	-	1814
90	10.62	1.31	131.8	355	-	2027
90	12.95	1.07	108.1	406	-	2165
90	14.46	0.96	96.8	443	-	2246
120	16.47	1.12	85.0	579	-	2346
120	22.97	0.81	60.9	355	-	2621
120	28.00	0.66	50.0	406	-	2800
120	31.27	0.59	44.8	443	-	2905
120	33.78	0.55	41.4	458	-	2981
120	47.12	0.39	29.7	355	-	3331
120	57.43	0.32	24.4	406	-	3558
110	64.13	0.26	21.8	406	-	3691
110	78.17	0.22	17.9	406	-	3943

IBA52

Mn_2 [Nm]	i	Pn_1 [kW]	n2 [rpm]	Fr1 [N]	Fr2 D-S-P [N]	Fr2 C [N]
160	7.91	3.12	176.9	373	-	1969
160	9.46	2.61	148.0	414	-	2090
160	11.57	2.13	121.0	405	-	2235
160	14.63	1.69	95.7	392	-	2416
200	17.11	1.80	81.8	529	-	2546
200	20.46	1.51	68.4	414	-	2702
200	25.03	1.23	55.9	405	-	2890
200	31.63	0.98	44.3	392	-	3124
200	35.10	0.88	39.9	446	-	3235
200	41.97	0.74	33.4	414	-	3433
220	51.34	0.66	27.3	445	-	3672
200	64.87	0.48	21.6	356	-	3970
200	79.07	0.39	17.7	406	-	4000

IBA53

Mn_2 [Nm]	i	Pn_1 [kW]	n2 [rpm]	Fr1 [N]	Fr2 D-S-P [N]	Fr2 C [N]
220	73.70	0.49	19.0	472	-	4000
220	93.33	0.38	15.0	472	-	4000
220	111.61	0.32	12.5	472	-	4000
220	136.53	0.26	10.2	472	-	4000
220	172.53	0.21	8.1	472	-	4000
220	197.11	0.18	7.1	472	-	4000
220	249.08	0.14	5.6	472	-	4000
220	271.16	0.13	5.2	472	-	4000
220	342.65	0.10	4.1	472	-	4000

5.3 IB/IBA RIDUTTORE - 1400 RPM

IBA72

Mn_2 [Nm]	i	Pn_1 [kW]	n2 [rpm]	Fr1 [N]	Fr2 D-S-P [N]	Fr2 C [N]
350	8.36	6.46	167.5	664	5079	2540
350	10.06	5.37	139.2	685	5403	2701
350	12.44	4.34	112.5	667	5800	2900
420	14.91	4.35	93.9	826	6160	3080
420	17.94	3.61	78.0	685	6552	3276
420	22.19	2.92	63.1	667	7033	3517
420	27.45	2.36	51.0	667	7550	3775
420	33.04	1.96	42.4	685	8031	4016
400	40.87	1.51	34.2	635	8621	4311
350	45.64	1.18	30.7	646	8944	4472
350	54.94	0.98	25.5	685	9515	4757
350	67.96	0.79	20.6	667	10000	5107

IBA73

Mn_2 [Nm]	i	Pn_1 [kW]	n2 [rpm]	Fr1 [N]	Fr2 D-S-P [N]	Fr2 C [N]
450	43.89	1.67	31.9	330	8828	4414
450	52.83	1.39	26.5	411	9391	4696
450	65.35	1.12	21.4	400	10000	5041
450	80.83	0.91	17.3	400	10000	5411
450	97.29	0.75	14.4	411	10000	5500
450	120.34	0.61	11.6	400	10000	5500
450	149.73	0.49	9.3	398	10000	5500
450	180.23	0.41	7.8	411	10000	5500
450	222.93	0.33	6.3	400	10000	5500
450	260.20	0.28	5.4	424	10000	5500
450	321.85	0.23	4.3	400	10000	5500
450	357.95	0.20	3.9	445	10000	5500
450	442.76	0.17	3.2	400	10000	5500

IB063

Mn_2 [Nm]	i	Pn_1 [kW]	n2 [rpm]	Fr1 [N]	Fr2 D-S-P [N]	Fr2 C [N]
290	5.71	8.27	245.0	314	7034	2010
340	6.88	8.05	203.5	337	7335	2096
350	7.32	7.79	191.2	365	7475	2136
460	9.16	8.18	152.8	323	7673	2192
520	10.26	8.25	136.4	315	7774	2221
540	11.03	7.98	127.0	345	7927	2265
580	12.35	7.65	113.3	380	8142	2326
590	13.15	7.31	106.5	416	8322	2378
590	15.18	6.33	92.3	519	8853	2529
600	17.00	5.75	82.3	581	9248	2642

5.3 IB/IBA RIDUTTORE - 1400 RPM

IB063

Mn_2 [Nm]	i	Pn_1 [kW]	n2 [rpm]	Fr1 [N]	Fr2 D-S-P [N]	Fr2 C [N]
600	22.39	4.36	62.5	728	10385	2967
600	26.09	3.75	53.7	794	11063	3161
600	28.03	3.49	49.9	821	11393	3255
600	33.43	2.92	41.9	881	12000	3496
600	38.58	2.53	36.3	922	12000	3703
600	43.22	2.26	32.4	951	12000	3874
600	50.81	1.92	27.6	987	12000	4129
600	56.93	1.72	24.6	1009	12000	4316
600	69.16	1.41	20.2	1041	12000	4654
600	77.48	1.26	18.1	1057	12000	4861
600	90.33	1.08	15.5	1076	12000	5154
600	101.20	0.97	13.8	1089	12000	5380
600	111.74	0.87	12.5	1098	12000	5585
600	124.20	0.79	11.3	1108	12000	5811
600	139.15	0.70	10.1	1116	12000	6062
600	157.42	0.62	8.9	1125	12000	6346

IB083

Mn_2 [Nm]	i	Pn_1 [kW]	n2 [rpm]	Fr1 [N]	Fr2 D-S-P [N]	Fr2 C [N]
500	7.81	10.43	179.3	1685	11980	3423
600	8.62	11.33	162.4	1571	12040	3440
650	10.49	10.09	133.4	1728	12807	3659
750	11.59	10.54	120.8	1671	12915	3690
810	14.43	9.14	97.0	1847	13870	3963
850	16.60	8.34	84.4	1948	14518	4148
850	18.32	7.56	76.4	2047	15115	4319
850	22.82	6.07	61.4	2235	16508	4717
850	26.71	5.18	52.4	2346	17573	5021
850	29.50	4.69	47.5	2408	18000	5220
850	31.80	4.35	44.0	2451	18000	5376
850	34.49	4.01	40.6	2494	18000	5549
850	39.60	3.50	35.4	2500	18000	5853
850	42.95	3.22	32.6	2500	18000	6039
850	45.44	3.05	30.8	2500	18000	6171
850	51.19	2.70	27.4	2500	18000	6458
850	55.52	2.49	25.2	2500	18000	6660
850	59.96	2.31	23.4	2500	18000	6856
850	63.74	2.17	22.0	2500	18000	7016
850	69.14	2.00	20.2	2500	18000	7234
850	73.14	1.89	19.1	2500	18000	7388
850	80.76	1.71	17.3	2500	18000	7666
850	92.19	1.50	15.2	2500	18000	8052
850	100.57	1.38	13.9	2500	18000	8315

5.3 IB/IBA RIDUTTORE - 1400 RPM

IB083

Mn_2 [Nm]	i	Pn_1 [kW]	n2 [rpm]	Fr1 [N]	Fr2 D-S-P [N]	Fr2 C [N]
850	105.29	1.32	13.3	2500	18000	8457
850	116.25	1.19	12.0	2500	18000	8771
850	126.76	1.09	11.0	2500	18000	9053
850	144.77	0.96	9.7	2500	18000	9503

IB103

Mn_2 [Nm]	i	Pn_1 [kW]	n2 [rpm]	Fr1 [N]	Fr2 D-S-P [N]	Fr2 C [N]
800	8.13	16.03	172.3	1078	14868	4248
900	8.97	16.35	156.1	1041	15147	4328
1000	10.92	14.92	128.2	1211	16052	4586
1000	12.05	13.52	116.2	1377	16676	4765
1200	14.99	13.04	93.4	1433	17560	5017
1400	17.27	13.20	81.1	1414	17992	5141
1400	19.06	11.97	73.5	1561	18718	5348
1400	23.70	9.62	59.1	1839	20415	5833
1500	26.51	9.22	52.8	1887	21050	6014
1600	30.55	8.53	45.8	1969	21978	6279
1700	33.07	8.37	42.3	1987	22000	6398
1700	35.87	7.72	39.0	2065	22000	6610
1700	41.12	6.73	34.0	2182	22000	6979
1700	44.61	6.21	31.4	2244	22000	7207
1700	47.28	5.86	29.6	2286	22000	7374
1700	50.24	5.51	27.9	2327	22000	7552
1700	53.02	5.22	26.4	2361	22000	7712
1700	58.50	4.73	23.9	2419	22000	8013
1700	64.89	4.27	21.6	2474	22000	8340
1700	68.58	4.04	20.4	2502	22000	8519
1700	72.76	3.81	19.2	2529	22000	8715
1700	78.92	3.51	17.7	2564	22000	8990
1800	83.66	3.50	16.7	2565	22000	9109
1800	92.31	3.18	15.2	2604	22000	9459
1800	105.44	2.78	13.3	2651	22000	9950
1800	114.80	2.55	12.2	2678	22000	10275
1800	120.42	2.43	11.6	2692	22000	10462
1800	132.87	2.21	10.5	2719	22000	10856
1800	144.69	2.03	9.7	2740	22000	11208
1800	165.25	1.77	8.5	2770	22000	11776

IB123

Mn_2 [Nm]	i	Pn_1 [kW]	n2 [rpm]	Fr1 [N]	Fr2 D-S-P [N]	Fr2 C [N]
1500	7.97	30.67	175.8	2561	17308	4945

5.3 IB/IBA RIDUTTORE - 1400 RPM

IB123

Mn_2 [Nm]	i	Pn_1 [kW]	n2 [rpm]	Fr1 [N]	Fr2 D-S-P [N]	Fr2 C [N]
1800	9.62	30.48	145.5	2570	17484	4995
2000	10.33	31.52	135.5	2521	17181	4909
2000	12.48	26.10	112.2	2775	18875	5393
2100	13.84	24.71	101.1	2841	19393	5541
2100	15.38	22.24	91.0	2957	20420	5834
2200	18.58	19.29	75.4	3095	21892	6255
2500	20.61	19.76	67.9	3073	21629	6180
2800	22.78	20.02	61.5	3061	21364	6104
2800	25.89	17.62	54.1	3174	22840	6526
2800	27.51	16.58	50.9	3223	23562	6732
2800	30.79	14.81	45.5	3306	24944	7127
2800	31.26	14.59	44.8	3316	25133	7181
2800	34.68	13.15	40.4	3384	26458	7559
2800	40.53	11.25	34.5	3473	28532	8152
3000	44.89	10.89	31.2	3490	29033	8295
3200	49.80	10.47	28.1	3510	29606	8459
3200	54.30	9.60	25.8	3550	30000	8825
3200	59.36	8.78	23.6	3589	30000	9214
3300	62.59	8.59	22.4	3598	30000	9319
3300	69.43	7.74	20.2	3638	30000	9795
3500	74.42	7.66	18.8	3641	30000	9859
3500	80.04	7.12	17.5	3667	30000	10211
3500	89.87	6.34	15.6	3703	30000	10788
3500	99.70	5.72	14.0	3733	30000	11324
3500	106.65	5.35	13.1	3750	30000	11682
3500	119.60	4.77	11.7	3777	30000	12309
3500	129.96	4.39	10.8	3795	30000	12780
3500	144.43	3.95	9.7	3816	30000	13395
3500	160.23	3.56	8.7	3834	30000	14022
3500	180.40	3.16	7.8	3853	30000	14766

IB143

Mn_2 [Nm]	i	Pn_1 [kW]	n2 [rpm]	Fr1 [N]	Fr2 D-S-P [N]	Fr2 C [N]
3000	10.84	45.08	129.2	2299	15530	15530
3100	11.87	42.55	118.0	2395	15973	15973
3100	14.49	34.86	96.7	2685	17731	17731
3200	17.04	30.59	82.2	2847	18933	18933
3600	18.66	31.43	75.0	2815	18542	18542
4000	21.00	31.03	66.7	2830	18460	18460
4400	22.77	31.47	61.5	2813	18031	18031
4600	25.63	29.24	54.6	2898	18668	18668
4600	27.44	27.30	51.0	2971	19429	19429
4700	30.05	25.48	46.6	3040	20146	20146

5.3 IB/IBA RIDUTTORE - 1400 RPM

IB143

Mn_2 [Nm]	i	Pn_1 [kW]	n2 [rpm]	Fr1 [N]	Fr2 D-S-P [N]	Fr2 C [N]
4700	33.01	23.19	42.4	3126	21254	21254
4800	36.67	21.32	38.2	3197	22216	22216
4800	40.29	19.41	34.8	3269	23399	23399
4800	44.16	17.70	31.7	3334	24589	24589
5000	48.35	16.84	28.9	3366	25162	25162
5000	53.16	15.32	26.3	3424	26469	26469
5000	54.63	14.91	25.6	3439	26852	26852
5000	59.02	13.80	23.7	3481	27958	27958
5000	64.88	12.55	21.6	3528	29352	29352
5000	70.43	11.56	19.9	3566	30597	30597
5000	77.12	10.56	18.1	3603	32010	32010
5000	85.54	9.52	16.4	3643	33680	33680
5000	94.13	8.65	14.9	3675	35271	35271
5000	105.83	7.70	13.2	3712	37290	37290
5000	111.94	7.28	12.5	3728	38286	38286
5000	124.62	6.54	11.2	3755	40000	40000
5000	136.44	5.97	10.3	3777	40000	40000
5000	149.59	5.44	9.4	3797	40000	40000
5000	166.53	4.89	8.4	3818	40000	40000
5000	187.24	4.35	7.5	3838	40000	40000

IB153

Mn_2 [Nm]	i	Pn_1 [kW]	n2 [rpm]	Fr1 [N]	Fr2 D-S-P [N]	Fr2 C [N]
4500	10.49	69.86	133.4	7032	32656	32656
4500	12.64	57.98	110.7	7516	35147	35147
5000	14.01	58.13	99.9	7509	35853	35853
5000	15.40	52.89	90.9	7723	37222	37222
6000	18.56	52.67	75.5	7732	38582	38582
6500	20.56	51.49	68.1	7780	39483	39483
6700	23.86	45.74	58.7	8014	41653	41653
6800	25.19	43.98	55.6	8085	42436	42436
8000	28.23	46.16	49.6	7997	42686	42686
8000	30.35	42.94	46.1	8128	44001	44001
8000	33.63	38.74	41.6	8298	45923	45923
8000	35.02	37.21	40.0	8361	46696	46696
8000	38.81	33.58	36.1	8509	48712	48712
8000	42.30	30.81	33.1	8621	50453	50453
8000	47.53	27.41	29.4	8759	52896	52896
8000	50.56	25.77	27.7	8826	54227	54227
8000	54.64	23.85	25.6	8904	55937	55937
8000	57.27	22.75	24.4	8949	56996	56996
8000	60.92	21.39	23.0	9005	58412	58412
8000	63.47	20.53	22.1	9039	59367	59367

5.3 IB/IBA RIDUTTORE - 1400 RPM

IB153

Mn_2 [Nm]	i	Pn_1 [kW]	n2 [rpm]	Fr1 [N]	Fr2 D-S-P [N]	Fr2 C [N]
8000	71.15	18.32	19.7	9130	62097	62097
8000	77.22	16.87	18.1	9188	64121	64121
8000	83.89	15.53	16.7	9243	65000	65000
8000	87.65	14.87	16.0	9270	65000	65000
8000	93.05	14.00	15.1	9305	65000	65000
8000	103.12	12.64	13.6	9361	65000	65000
8000	123.88	10.52	11.3	9447	65000	65000
8000	134.27	9.71	10.4	9480	65000	65000
8000	149.26	8.73	9.4	9520	65000	65000
8000	165.42	7.88	8.5	9554	65000	65000

IB163

Mn_2 [Nm]	i	Pn_1 [kW]	n2 [rpm]	Fr1 [N]	Fr2 D-S-P [N]	Fr2 C [N]
6800	8.89	124.57	157.4	7073	46145	46145
7900	10.58	121.68	132.4	7148	47640	47640
7700	11.87	105.67	118.0	7565	50376	50376
8800	12.81	111.91	109.3	7403	50078	50078
9600	14.08	111.03	99.4	7426	50762	50762
10000	15.52	104.94	90.2	7584	52265	52265
9900	16.39	98.41	85.4	7754	53698	53698
10400	18.02	94.03	77.7	7869	55082	55082
10700	19.96	87.33	70.2	8043	57072	57072
10400	21.94	77.20	63.8	8307	60008	60008
10500	24.17	70.75	57.9	8475	62369	62369
11100	26.58	68.03	52.7	8546	63887	63887
10200	28.80	57.69	48.6	8815	67696	65000
11500	30.92	60.58	45.3	8740	67456	65000
11900	34.25	56.59	40.9	8844	69762	65000
12300	37.66	53.20	37.2	8932	71943	65000
12700	40.65	50.89	34.4	8992	73630	65000
12000	45.09	43.35	31.1	9189	78186	65000
13000	51.00	41.52	27.4	9236	80000	65000
13000	53.63	39.48	26.1	9289	80000	65000
13000	58.97	35.91	23.7	9382	80000	65000
13000	69.78	30.35	20.1	9527	80000	65000
13000	76.72	27.60	18.2	9599	80000	65000
13000	87.54	24.19	16.0	9688	80000	65000
13000	96.25	22.00	14.6	9745	80000	65000
13000	103.93	20.37	13.5	9787	80000	65000
13000	114.27	18.53	12.2	9835	80000	65000
13000	126.29	16.77	11.1	9881	80000	65000
13000	138.85	15.25	10.1	9921	80000	65000
13000	154.83	13.68	9.0	9962	80000	65000

5.4 IB/IBA RIDUTTORE - 1140 RPM

IBA42

Mn_2 [Nm]	i	Pn_1 [kW]	n2 [rpm]	Fr1 [N]	Fr2 D-S-P [N]	Fr2 C [N]
92	7.62	1.51	149.7	373	-	1943
92	10.62	1.08	107.3	355	-	2171
92	12.95	0.89	88.0	406	-	2319
92	14.46	0.79	78.8	443	-	2406
123	16.47	0.93	69.2	579	-	2512
123	22.97	0.67	49.6	355	-	2807
123	28.00	0.55	40.7	406	-	2998
123	31.27	0.49	36.5	443	-	3111
123	33.78	0.45	33.8	458	-	3192
123	47.12	0.32	24.2	355	-	3567
123	57.43	0.27	19.9	406	-	3810
113	64.13	0.22	17.8	406	-	3952
113	78.17	0.18	14.6	406	-	4000

IBA52

Mn_2 [Nm]	i	Pn_1 [kW]	n2 [rpm]	Fr1 [N]	Fr2 D-S-P [N]	Fr2 C [N]
164	7.91	2.58	144.1	373	-	2108
164	9.46	2.16	120.5	414	-	2238
164	11.57	1.76	98.5	405	-	2393
164	14.63	1.40	77.9	392	-	2587
205	17.11	1.49	66.6	529	-	2726
205	20.46	1.25	55.7	414	-	2894
205	25.03	1.02	45.5	405	-	3095
205	31.63	0.81	36.0	392	-	3346
205	35.10	0.73	32.5	446	-	3464
205	41.97	0.61	27.2	414	-	3677
226	51.34	0.55	22.2	445	-	3932
205	64.87	0.39	17.6	356	-	4000
205	79.07	0.32	14.4	406	-	4000

IBA53

Mn_2 [Nm]	i	Pn_1 [kW]	n2 [rpm]	Fr1 [N]	Fr2 D-S-P [N]	Fr2 C [N]
226	73.70	0.40	15.5	472	-	4000
226	93.33	0.32	12.2	472	-	4000
226	111.61	0.27	10.2	472	-	4000
226	136.53	0.22	8.3	472	-	4000
226	172.53	0.17	6.6	472	-	4000
226	197.11	0.15	5.8	472	-	4000
226	249.08	0.12	4.6	472	-	4000
226	271.16	0.11	4.2	472	-	4000
226	342.65	0.09	3.3	472	-	4000

5.4 IB/IBA RIDUTTORE - 1140 RPM

IBA72

Mn_2 [Nm]	i	Pn_1 [kW]	n2 [rpm]	Fr1 [N]	Fr2 D-S-P [N]	Fr2 C [N]
359	8.36	5.34	136.4	664	5439	2720
359	10.06	4.44	113.3	685	5786	2893
359	12.44	3.59	91.6	667	6211	3105
431	14.91	3.59	76.5	826	6596	3298
431	17.94	2.98	63.5	685	7017	3508
431	22.19	2.41	51.4	667	7532	3766
431	27.45	1.95	41.5	667	8085	4043
431	33.04	1.62	34.5	685	8600	4300
410	40.87	1.25	27.9	635	9232	4616
359	45.64	0.98	25.0	646	9578	4789
359	54.94	0.81	20.8	685	10000	5095
359	67.96	0.66	16.8	667	10000	5469

IBA73

Mn_2 [Nm]	i	Pn_1 [kW]	n2 [rpm]	Fr1 [N]	Fr2 D-S-P [N]	Fr2 C [N]
461	43.89	1.38	26.0	330	9454	4727
461	52.83	1.15	21.6	411	10000	5028
461	65.35	0.93	17.4	400	10000	5398
461	80.83	0.75	14.1	400	10000	5500
461	97.29	0.62	11.7	411	10000	5500
461	120.34	0.50	9.5	400	10000	5500
461	149.73	0.40	7.6	398	10000	5500
461	180.23	0.34	6.3	411	10000	5500
461	222.93	0.27	5.1	400	10000	5500
461	260.20	0.23	4.4	424	10000	5500
461	321.85	0.19	3.5	400	10000	5500
461	357.95	0.17	3.2	445	10000	5500
461	442.76	0.14	2.6	400	10000	5500

IB063

Mn_2 [Nm]	i	Pn_1 [kW]	n2 [rpm]	Fr1 [N]	Fr2 D-S-P [N]	Fr2 C [N]
297	5.71	6.83	199.5	292	7587	2168
349	6.88	6.65	165.7	316	7919	2263
359	7.32	6.43	155.7	344	8070	2306
472	9.16	6.76	124.4	301	8305	2373
533	10.26	6.82	111.1	294	8426	2407
554	11.03	6.59	103.4	324	8593	2455
595	12.35	6.32	92.3	359	8832	2523
605	13.15	6.04	86.7	396	9025	2579
605	15.18	5.23	75.1	502	9594	2741
615	17.00	4.75	67.0	566	10019	2863

5.4 IB/IBA RIDUTTORE - 1140 RPM

IB063

Mn_2 [Nm]	i	Pn_1 [kW]	n2 [rpm]	Fr1 [N]	Fr2 D-S-P [N]	Fr2 C [N]
615	22.39	3.61	50.9	716	11236	3210
615	26.09	3.10	43.7	784	11961	3417
615	28.03	2.88	40.7	812	12000	3518
615	33.43	2.42	34.1	873	12000	3776
615	38.58	2.09	29.6	915	12000	3997
615	43.22	1.87	26.4	945	12000	4181
615	50.81	1.59	22.4	982	12000	4453
615	56.93	1.42	20.0	1004	12000	4654
615	69.16	1.17	16.5	1037	12000	5015
615	77.48	1.04	14.7	1054	12000	5237
615	90.33	0.89	12.6	1073	12000	5550
615	101.20	0.80	11.3	1086	12000	5793
615	111.74	0.72	10.2	1096	12000	6012
615	124.20	0.65	9.2	1105	12000	6253
615	139.15	0.58	8.2	1115	12000	6522
615	157.42	0.51	7.2	1123	12000	6826

IB083

Mn_2 [Nm]	i	Pn_1 [kW]	n2 [rpm]	Fr1 [N]	Fr2 D-S-P [N]	Fr2 C [N]
513	7.81	8.62	146.0	1652	12911	3689
615	8.62	9.37	132.2	1535	12995	3713
666	10.49	8.34	108.6	1696	13824	3950
769	11.59	8.71	98.4	1638	13958	3988
830	14.43	7.56	79.0	1818	14991	4283
871	16.60	6.89	68.7	1922	15692	4483
871	18.32	6.24	62.2	2023	16331	4666
871	22.82	5.01	50.0	2216	17821	5092
871	26.71	4.28	42.7	2330	18000	5417
871	29.50	3.88	38.6	2393	18000	5631
871	31.80	3.60	35.9	2437	18000	5798
871	34.49	3.32	33.0	2481	18000	5983
871	39.60	2.89	28.8	2500	18000	6308
871	42.95	2.66	26.5	2500	18000	6507
871	45.44	2.52	25.1	2500	18000	6648
871	51.19	2.24	22.3	2500	18000	6955
871	55.52	2.06	20.5	2500	18000	7172
871	59.96	1.91	19.0	2500	18000	7382
871	63.74	1.79	17.9	2500	18000	7553
871	69.14	1.65	16.5	2500	18000	7786
871	73.14	1.56	15.6	2500	18000	7950
871	80.76	1.42	14.1	2500	18000	8248
871	92.19	1.24	12.4	2500	18000	8661
871	100.57	1.14	11.3	2500	18000	8943

5.4 IB/IBA RIDUTTORE - 1140 RPM

IB083

Mn_2 [Nm]	i	Pn_1 [kW]	n2 [rpm]	Fr1 [N]	Fr2 D-S-P [N]	Fr2 C [N]
871	105.29	1.09	10.8	2500	18000	9095
871	116.25	0.98	9.8	2500	18000	9430
871	126.76	0.90	9.0	2500	18000	9733
871	144.77	0.79	7.9	2500	18000	10214

IB103

Mn_2 [Nm]	i	Pn_1 [kW]	n2 [rpm]	Fr1 [N]	Fr2 D-S-P [N]	Fr2 C [N]
820	8.13	13.25	140.3	1031	16015	4576
923	8.97	13.51	127.1	992	16327	4665
1025	10.92	12.33	104.4	1167	17307	4945
1025	12.05	11.17	94.6	1337	17976	5136
1230	14.99	10.78	76.1	1394	18947	5414
1435	17.27	10.91	66.0	1375	19436	5553
1435	19.06	9.89	59.8	1525	20213	5775
1435	23.70	7.95	48.1	1810	22000	6294
1538	26.51	7.62	43.0	1860	22000	6492
1640	30.55	7.05	37.3	1943	22000	6779
1743	33.07	6.92	34.5	1962	22000	6910
1743	35.87	6.38	31.8	2042	22000	7137
1743	41.12	5.56	27.7	2162	22000	7532
1743	44.61	5.13	25.6	2226	22000	7776
1743	47.28	4.84	24.1	2268	22000	7955
1743	50.24	4.55	22.7	2310	22000	8144
1743	53.02	4.32	21.5	2345	22000	8316
1743	58.50	3.91	19.5	2405	22000	8638
1743	64.89	3.53	17.6	2462	22000	8988
1743	68.58	3.34	16.6	2490	22000	9180
1743	72.76	3.15	15.7	2518	22000	9389
1743	78.92	2.90	14.4	2554	22000	9683
1845	83.66	2.90	13.6	2554	22000	9815
1845	92.31	2.62	12.3	2594	22000	10189
1845	105.44	2.30	10.8	2642	22000	10714
1845	114.80	2.11	9.9	2670	22000	11062
1845	120.42	2.01	9.5	2685	22000	11262
1845	132.87	1.82	8.6	2712	22000	11684
1845	144.69	1.67	7.9	2734	22000	12061
1845	165.25	1.47	6.9	2765	22000	12669

IB123

Mn_2 [Nm]	i	Pn_1 [kW]	n2 [rpm]	Fr1 [N]	Fr2 D-S-P [N]	Fr2 C [N]
1538	7.97	25.35	143.1	2525	18833	5381

5.4 IB/IBA RIDUTTORE - 1140 RPM

IB123

Mn_2 [Nm]	i	Pn_1 [kW]	n2 [rpm]	Fr1 [N]	Fr2 D-S-P [N]	Fr2 C [N]
1845	9.62	25.19	118.5	2534	19084	5452
2050	10.33	26.05	110.3	2484	18801	5372
2050	12.48	21.57	91.3	2745	20614	5890
2153	13.84	20.42	82.3	2812	21189	6054
2153	15.38	18.38	74.1	2931	22289	6368
2255	18.58	15.94	61.4	3073	23884	6824
2563	20.61	16.33	55.3	3050	23665	6761
2870	22.78	16.54	50.0	3037	23443	6698
2870	25.89	14.56	44.0	3153	25023	7149
2870	27.51	13.70	41.4	3203	25796	7370
2870	30.79	12.24	37.0	3288	27274	7793
2870	31.26	12.06	36.5	3299	27477	7851
2870	34.68	10.87	32.9	3368	28895	8256
2870	40.53	9.30	28.1	3459	30000	8890
3075	44.89	9.00	25.4	3477	30000	9055
3280	49.80	8.65	22.9	3497	30000	9242
3280	54.30	7.93	21.0	3539	30000	9634
3280	59.36	7.26	19.2	3578	30000	10050
3383	62.59	7.10	18.2	3588	30000	10168
3383	69.43	6.40	16.4	3628	30000	10678
3588	74.42	6.33	15.3	3632	30000	10758
3588	80.04	5.89	14.2	3658	30000	11135
3588	89.87	5.24	12.7	3696	30000	11752
3588	99.70	4.73	11.4	3726	30000	12326
3588	106.65	4.42	10.7	3744	30000	12709
3588	119.60	3.94	9.5	3772	30000	13380
3588	129.96	3.63	8.8	3790	30000	13884
3588	144.43	3.26	7.9	3811	30000	14543
3588	160.23	2.94	7.1	3830	30000	15214
3588	180.40	2.61	6.3	3849	30000	16009

IB143

Mn_2 [Nm]	i	Pn_1 [kW]	n2 [rpm]	Fr1 [N]	Fr2 D-S-P [N]	Fr2 C [N]
3075	10.84	37.25	105.2	2257	17051	17051
3178	11.87	35.16	96.1	2355	17540	17540
3178	14.49	28.81	78.7	2653	19421	19421
3280	17.04	25.28	66.9	2818	20722	20722
3690	18.66	25.97	61.1	2785	20361	20361
4100	21.00	25.64	54.3	2801	20331	20331
4510	22.77	26.01	50.1	2784	19930	19930
4715	25.63	24.16	44.5	2870	20640	20640
4715	27.44	22.56	41.5	2945	21455	21455
4818	30.05	21.06	37.9	3016	22236	22236

5.4 IB/IBA RIDUTTORE - 1140 RPM

IB143

Mn_2 [Nm]	i	Pn_1 [kW]	n2 [rpm]	Fr1 [N]	Fr2 D-S-P [N]	Fr2 C [N]
4818	33.01	19.17	34.5	3104	23422	23422
4920	36.67	17.62	31.1	3177	24465	24465
4920	40.29	16.04	28.3	3251	25732	25732
4920	44.16	14.63	25.8	3317	27005	27005
5125	48.35	13.92	23.6	3350	27648	27648
5125	53.16	12.66	21.4	3409	29045	29045
5125	54.63	12.32	20.9	3425	29456	29456
5125	59.02	11.40	19.3	3468	30639	30639
5125	64.88	10.37	17.6	3516	32132	32132
5125	70.43	9.56	16.2	3555	33463	33463
5125	77.12	8.73	14.8	3593	34976	34976
5125	85.54	7.87	13.3	3634	36763	36763
5125	94.13	7.15	12.1	3667	38465	38465
5125	105.83	6.36	10.8	3704	40000	40000
5125	111.94	6.01	10.2	3721	40000	40000
5125	124.62	5.40	9.2	3749	40000	40000
5125	136.44	4.93	8.4	3771	40000	40000
5125	149.59	4.50	7.6	3792	40000	40000
5125	166.53	4.04	6.8	3813	40000	40000
5125	187.24	3.59	6.1	3834	40000	40000

IB153

Mn_2 [Nm]	i	Pn_1 [kW]	n2 [rpm]	Fr1 [N]	Fr2 D-S-P [N]	Fr2 C [N]
4613	10.49	57.73	108.7	6961	35245	35245
4613	12.64	47.91	90.2	7457	37910	37910
5125	14.01	48.04	81.4	7450	38700	38700
5125	15.40	43.70	74.0	7669	40164	40164
6150	18.56	43.53	61.4	7678	41686	41686
6663	20.56	42.55	55.4	7727	42683	42683
6868	23.86	37.80	47.8	7967	45019	45019
6970	25.19	36.34	45.3	8041	45863	45863
8200	28.23	38.14	40.4	7950	46211	46211
8200	30.35	35.48	37.6	8084	47617	47617
8200	33.63	32.02	33.9	8259	49675	49675
8200	35.02	30.75	32.6	8323	50502	50502
8200	38.81	27.75	29.4	8474	52659	52659
8200	42.30	25.46	26.9	8590	54522	54522
8200	47.53	22.65	24.0	8731	57136	57136
8200	50.56	21.30	22.6	8800	58561	58561
8200	54.64	19.71	20.9	8880	60391	60391
8200	57.27	18.80	19.9	8926	61524	61524
8200	60.92	17.68	18.7	8983	63040	63040
8200	63.47	16.97	18.0	9019	64061	64061

5.4 IB/IBA RIDUTTORE - 1140 RPM

IB153

Mn_2 [Nm]	i	Pn_1 [kW]	n2 [rpm]	Fr1 [N]	Fr2 D-S-P [N]	Fr2 C [N]
8200	71.15	15.14	16.0	9111	65000	65000
8200	77.22	13.94	14.8	9171	65000	65000
8200	83.89	12.84	13.6	9227	65000	65000
8200	87.65	12.29	13.0	9255	65000	65000
8200	93.05	11.57	12.2	9291	65000	65000
8200	103.12	10.44	11.1	9348	65000	65000
8200	123.88	8.69	9.2	9436	65000	65000
8200	134.27	8.02	8.5	9470	65000	65000
8200	149.26	7.21	7.6	9511	65000	65000
8200	165.42	6.51	6.9	9546	65000	65000

IB163

Mn_2 [Nm]	i	Pn_1 [kW]	n2 [rpm]	Fr1 [N]	Fr2 D-S-P [N]	Fr2 C [N]
6970	8.89	102.94	128.2	6992	49918	49918
8098	10.58	100.55	107.8	7069	51605	51605
7893	11.87	87.32	96.0	7496	54517	54517
9020	12.81	92.48	89.0	7330	54285	54285
9840	14.08	91.75	81.0	7353	55080	55080
10250	15.52	86.72	73.5	7516	56720	56720
10148	16.39	81.33	69.6	7690	58246	58246
10660	18.02	77.70	63.3	7807	59766	59766
10968	19.96	72.17	57.1	7986	61920	61920
10660	21.94	63.79	52.0	8257	65037	65000
10763	24.17	58.47	47.2	8429	67572	65000
11378	26.58	56.22	42.9	8502	69244	65000
10455	28.80	47.67	39.6	8778	73249	65000
11788	30.92	50.06	36.9	8700	73095	65000
12198	34.25	46.76	33.3	8807	75594	65000
12608	37.66	43.96	30.3	8897	77959	65000
13018	40.65	42.05	28.0	8959	79796	65000
12300	45.09	35.82	25.3	9160	80000	65000
13325	51.00	34.31	22.4	9209	80000	65000
13325	53.63	32.63	21.3	9264	80000	65000
13325	58.97	29.68	19.3	9359	80000	65000
13325	69.78	25.08	16.3	9508	80000	65000
13325	76.72	22.81	14.9	9581	80000	65000
13325	87.54	19.99	13.0	9672	80000	65000
13325	96.25	18.18	11.8	9730	80000	65000
13325	103.93	16.84	11.0	9774	80000	65000
13325	114.27	15.31	10.0	9823	80000	65000
13325	126.29	13.86	9.0	9870	80000	65000
13325	138.85	12.60	8.2	9911	80000	65000
13325	154.83	11.30	7.4	9953	80000	65000

5.5 IB/IBA RIDUTTORE - 900 RPM

IBA42

Mn_2 [Nm]	i	Pn_1 [kW]	n2 [rpm]	Fr1 [N]	Fr2 D-S-P [N]	Fr2 C [N]
95	7.62	1.22	118.2	373	-	2102
95	10.62	0.87	84.7	355	-	2349
95	12.95	0.72	69.5	406	-	2509
95	14.46	0.64	62.2	443	-	2603
126	16.47	0.75	54.6	579	-	2718
126	22.97	0.54	39.2	355	-	3037
126	28.00	0.44	32.1	406	-	3244
126	31.27	0.40	28.8	443	-	3366
126	33.78	0.37	26.6	458	-	3454
126	47.12	0.26	19.1	355	-	3859
126	57.43	0.22	15.7	406	-	4000
116	64.13	0.18	14.0	406	-	4000
116	78.17	0.15	11.5	406	-	4000

IBA52

Mn_2 [Nm]	i	Pn_1 [kW]	n2 [rpm]	Fr1 [N]	Fr2 D-S-P [N]	Fr2 C [N]
168	7.91	2.09	113.8	373	-	2281
168	9.46	1.74	95.1	414	-	2421
168	11.57	1.43	77.8	405	-	2589
168	14.63	1.13	61.5	392	-	2799
210	17.11	1.21	52.6	529	-	2950
210	20.46	1.01	44.0	414	-	3131
210	25.03	0.82	36.0	405	-	3349
210	31.63	0.65	28.4	392	-	3620
210	35.10	0.59	25.6	446	-	3748
210	41.97	0.49	21.4	414	-	3978
231	51.34	0.44	17.5	445	-	4000
210	64.87	0.32	13.9	356	-	4000
210	79.07	0.26	11.4	406	-	4000

IBA53

Mn_2 [Nm]	i	Pn_1 [kW]	n2 [rpm]	Fr1 [N]	Fr2 D-S-P [N]	Fr2 C [N]
231	73.70	0.32	12.2	472	-	4000
231	93.33	0.26	9.6	472	-	4000
231	111.61	0.21	8.1	472	-	4000
231	136.53	0.18	6.6	472	-	4000
231	172.53	0.14	5.2	472	-	4000
231	197.11	0.12	4.6	472	-	4000
231	249.08	0.10	3.6	472	-	4000
231	271.16	0.09	3.3	472	-	4000
231	342.65	0.07	2.6	472	-	4000

5.5 IB/IBA RIDUTTORE - 900 RPM

IBA72

Mn_2 [Nm]	i	Pn_1 [kW]	n2 [rpm]	Fr1 [N]	Fr2 D-S-P [N]	Fr2 C [N]
368	8.36	4.32	107.7	664	5885	2942
368	10.06	3.59	89.5	685	6260	3130
368	12.44	2.90	72.3	667	6720	3360
441	14.91	2.91	60.4	826	7137	3568
441	17.94	2.41	50.2	685	7592	3796
441	22.19	1.95	40.5	667	8150	4075
441	27.45	1.58	32.8	667	8748	4374
441	33.04	1.31	27.2	685	9306	4653
420	40.87	1.01	22.0	635	9989	4995
368	45.64	0.79	19.7	646	10000	5182
368	54.94	0.66	16.4	685	10000	5500
368	67.96	0.53	13.2	667	10000	5500

IBA73

Mn_2 [Nm]	i	Pn_1 [kW]	n2 [rpm]	Fr1 [N]	Fr2 D-S-P [N]	Fr2 C [N]
473	43.89	1.12	20.5	330	10000	5115
473	52.83	0.93	17.0	411	10000	5441
473	65.35	0.75	13.8	400	10000	5500
473	80.83	0.61	11.1	400	10000	5500
473	97.29	0.50	9.2	411	10000	5500
473	120.34	0.41	7.5	400	10000	5500
473	149.73	0.33	6.0	398	10000	5500
473	180.23	0.27	5.0	411	10000	5500
473	222.93	0.22	4.0	400	10000	5500
473	260.20	0.19	3.5	424	10000	5500
473	321.85	0.15	2.8	400	10000	5500
473	357.95	0.14	2.5	445	10000	5500
473	442.76	0.11	2.0	400	10000	5500

IB063

Mn_2 [Nm]	i	Pn_1 [kW]	n2 [rpm]	Fr1 [N]	Fr2 D-S-P [N]	Fr2 C [N]
305	5.71	5.52	157.5	270	8278	2365
357	6.88	5.38	130.8	294	8651	2472
368	7.32	5.20	122.9	324	8817	2519
483	9.16	5.47	98.2	280	9099	2600
546	10.26	5.52	87.7	272	9246	2642
567	11.03	5.33	81.6	302	9432	2695
609	12.35	5.11	72.8	339	9701	2772
620	13.15	4.88	68.4	377	9913	2832
620	15.18	4.23	59.3	485	10527	3008
630	17.00	3.84	52.9	551	10989	3140

5.5 IB/IBA RIDUTTORE - 900 RPM

IB063

Mn_2 [Nm]	i	Pn_1 [kW]	n2 [rpm]	Fr1 [N]	Fr2 D-S-P [N]	Fr2 C [N]
630	22.39	2.92	40.2	705	12000	3516
630	26.09	2.50	34.5	774	12000	3740
630	28.03	2.33	32.1	803	12000	3849
630	33.43	1.95	26.9	865	12000	4128
630	38.58	1.69	23.3	909	12000	4367
630	43.22	1.51	20.8	939	12000	4565
630	50.81	1.29	17.7	977	12000	4860
630	56.93	1.15	15.8	1000	12000	5076
630	69.16	0.94	13.0	1034	12000	5467
630	77.48	0.84	11.6	1050	12000	5707
630	90.33	0.72	10.0	1070	12000	6045
630	101.20	0.65	8.9	1083	12000	6308
630	111.74	0.58	8.1	1094	12000	6544
630	124.20	0.53	7.2	1103	12000	6805
630	139.15	0.47	6.5	1113	12000	7097
630	157.42	0.41	5.7	1122	12000	7425

IB083

Mn_2 [Nm]	i	Pn_1 [kW]	n2 [rpm]	Fr1 [N]	Fr2 D-S-P [N]	Fr2 C [N]
525	7.81	6.97	115.2	1619	14076	4022
630	8.62	7.57	104.4	1500	14190	4054
683	10.49	6.74	85.8	1664	15098	4314
788	11.59	7.05	77.7	1604	15267	4362
851	14.43	6.11	62.4	1789	16398	4685
893	16.60	5.58	54.2	1895	17165	4904
893	18.32	5.05	49.1	2000	17855	5102
893	22.82	4.06	39.4	2197	18000	5562
893	26.71	3.46	33.7	2314	18000	5914
893	29.50	3.14	30.5	2378	18000	6145
893	31.80	2.91	28.3	2423	18000	6325
893	34.49	2.68	26.1	2468	18000	6525
893	39.60	2.34	22.7	2500	18000	6877
893	42.95	2.15	20.9	2500	18000	7092
893	45.44	2.04	19.8	2500	18000	7245
893	51.19	1.81	17.6	2500	18000	7577
893	55.52	1.67	16.2	2500	18000	7811
893	59.96	1.54	15.0	2500	18000	8038
893	63.74	1.45	14.1	2500	18000	8223
893	69.14	1.34	13.0	2500	18000	8475
893	73.14	1.27	12.3	2500	18000	8653
893	80.76	1.15	11.1	2500	18000	8975
893	92.19	1.00	9.8	2500	18000	9421
893	100.57	0.92	8.9	2500	18000	9726

5.5 IB/IBA RIDUTTORE - 900 RPM

IB083

Mn_2 [Nm]	i	Pn_1 [kW]	n2 [rpm]	Fr1 [N]	Fr2 D-S-P [N]	Fr2 C [N]
893	105.29	0.88	8.6	2500	18000	9890
893	116.25	0.80	7.7	2500	18000	10253
893	126.76	0.73	7.1	2500	18000	10580
893	144.77	0.64	6.2	2500	18000	11100

IB103

Mn_2 [Nm]	i	Pn_1 [kW]	n2 [rpm]	Fr1 [N]	Fr2 D-S-P [N]	Fr2 C [N]
840	8.13	10.72	110.7	983	17448	4985
945	8.97	10.93	100.4	944	17802	5086
1050	10.92	9.97	82.4	1122	18879	5394
1050	12.05	9.03	74.7	1296	19601	5600
1260	14.99	8.72	60.1	1356	20685	5910
1470	17.27	8.82	52.1	1336	21247	6070
1470	19.06	8.00	47.2	1490	22000	6311
1470	23.70	6.43	38.0	1782	22000	6872
1575	26.51	6.16	34.0	1833	22000	7090
1680	30.55	5.70	29.5	1918	22000	7406
1785	33.07	5.60	27.2	1937	22000	7552
1785	35.87	5.16	25.1	2019	22000	7797
1785	41.12	4.50	21.9	2142	22000	8224
1785	44.61	4.15	20.2	2207	22000	8488
1785	47.28	3.91	19.0	2251	22000	8681
1785	50.24	3.68	17.9	2294	22000	8886
1785	53.02	3.49	17.0	2330	22000	9072
1785	58.50	3.16	15.4	2391	22000	9420
1785	64.89	2.85	13.9	2449	22000	9798
1785	68.58	2.70	13.1	2478	22000	10006
1785	72.76	2.54	12.4	2506	22000	10232
1785	78.92	2.34	11.4	2544	22000	10550
1890	83.66	2.34	10.8	2544	22000	10697
1890	92.31	2.12	9.8	2585	22000	11102
1890	105.44	1.86	8.5	2634	22000	11670
1890	114.80	1.71	7.8	2662	22000	12046
1890	120.42	1.63	7.5	2677	22000	12262
1890	132.87	1.47	6.8	2706	22000	12718
1890	144.69	1.35	6.2	2728	22000	13125
1890	165.25	1.19	5.5	2760	22000	13783

IB123

Mn_2 [Nm]	i	Pn_1 [kW]	n2 [rpm]	Fr1 [N]	Fr2 D-S-P [N]	Fr2 C [N]
1575	7.97	20.50	113.0	2489	20762	5932

5.5 IB/IBA RIDUTTORE - 900 RPM

IB123

Mn_2 [Nm]	i	Pn_1 [kW]	n2 [rpm]	Fr1 [N]	Fr2 D-S-P [N]	Fr2 C [N]
1890	9.62	20.37	93.6	2498	21113	6032
2100	10.33	21.07	87.1	2447	20861	5960
2100	12.48	17.45	72.1	2714	22821	6520
2205	13.84	16.51	65.0	2783	23470	6706
2205	15.38	14.86	58.5	2905	24658	7045
2310	18.58	12.89	48.5	3050	26410	7546
2625	20.61	13.21	43.7	3027	26253	7501
2940	22.78	13.38	39.5	3014	26094	7455
2940	25.89	11.77	34.8	3132	27801	7943
2940	27.51	11.08	32.7	3184	28638	8182
2940	30.79	9.90	29.2	3271	30000	8639
2940	31.26	9.75	28.8	3282	30000	8701
2940	34.68	8.79	25.9	3353	30000	9139
2940	40.53	7.52	22.2	3446	30000	9825
3150	44.89	7.27	20.1	3464	30000	10019
3360	49.80	6.99	18.1	3485	30000	10236
3360	54.30	6.42	16.6	3528	30000	10660
3360	59.36	5.87	15.2	3568	30000	11110
3465	62.59	5.74	14.4	3578	30000	11246
3465	69.43	5.17	13.0	3619	30000	11796
3675	74.42	5.12	12.1	3623	30000	11899
3675	80.04	4.76	11.2	3650	30000	12306
3675	89.87	4.24	10.0	3688	30000	12973
3675	99.70	3.82	9.0	3719	30000	13593
3675	106.65	3.57	8.4	3738	30000	14008
3675	119.60	3.19	7.5	3766	30000	14733
3675	129.96	2.93	6.9	3785	30000	15277
3675	144.43	2.64	6.2	3807	30000	15990
3675	160.23	2.38	5.6	3826	30000	16715
3675	180.40	2.11	5.0	3845	30000	17575

IB143

Mn_2 [Nm]	i	Pn_1 [kW]	n2 [rpm]	Fr1 [N]	Fr2 D-S-P [N]	Fr2 C [N]
3150	10.84	30.13	83.0	2214	18991	18991
3255	11.87	28.44	75.8	2315	19538	19538
3255	14.49	23.30	62.1	2620	21572	21572
3360	17.04	20.44	52.8	2789	22997	22997
3780	18.66	21.00	48.2	2756	22681	22681
4200	21.00	20.74	42.9	2771	22722	22722
4620	22.77	21.03	39.5	2754	22363	22363
4830	25.63	19.54	35.1	2843	23168	23168
4830	27.44	18.25	32.8	2919	24049	24049
4935	30.05	17.03	29.9	2992	24912	24912

5.5 IB/IBA RIDUTTORE - 900 RPM

IB143

Mn_2 [Nm]	i	Pn_1 [kW]	n2 [rpm]	Fr1 [N]	Fr2 D-S-P [N]	Fr2 C [N]
4935	33.01	15.50	27.3	3082	26194	26194
5040	36.67	14.25	24.5	3157	27341	27341
5040	40.29	12.97	22.3	3233	28710	28710
5040	44.16	11.83	20.4	3300	30087	30087
5250	48.35	11.26	18.6	3334	30819	30819
5250	53.16	10.24	16.9	3395	32330	32330
5250	54.63	9.96	16.5	3411	32773	32773
5250	59.02	9.22	15.2	3455	34052	34052
5250	64.88	8.39	13.9	3504	35666	35666
5250	70.43	7.73	12.8	3544	37106	37106
5250	77.12	7.06	11.7	3583	38741	38741
5250	85.54	6.36	10.5	3625	40000	40000
5250	94.13	5.78	9.6	3659	40000	40000
5250	105.83	5.14	8.5	3697	40000	40000
5250	111.94	4.86	8.0	3714	40000	40000
5250	124.62	4.37	7.2	3743	40000	40000
5250	136.44	3.99	6.6	3766	40000	40000
5250	149.59	3.64	6.0	3786	40000	40000
5250	166.53	3.27	5.4	3808	40000	40000
5250	187.24	2.91	4.8	3830	40000	40000

IB153

Mn_2 [Nm]	i	Pn_1 [kW]	n2 [rpm]	Fr1 [N]	Fr2 D-S-P [N]	Fr2 C [N]
4725	10.49	46.69	85.8	6890	38488	38488
4725	12.64	38.75	71.2	7398	41370	41370
5250	14.01	38.85	64.2	7391	42266	42266
5250	15.40	35.34	58.4	7615	43850	43850
6300	18.56	35.20	48.5	7624	45580	45580
6825	20.56	34.41	43.8	7675	46701	46701
7035	23.86	30.57	37.7	7920	49243	49243
7140	25.19	29.39	35.7	7996	50164	50164
8400	28.23	30.85	31.9	7903	50642	50642
8400	30.35	28.70	29.7	8040	52163	52163
8400	33.63	25.89	26.8	8219	54387	54387
8400	35.02	24.87	25.7	8285	55282	55282
8400	38.81	22.44	23.2	8440	57613	57613
8400	42.30	20.59	21.3	8559	59628	59628
8400	47.53	18.32	18.9	8704	62454	62454
8400	50.56	17.22	17.8	8774	63995	63995
8400	54.64	15.94	16.5	8856	65000	65000
8400	57.27	15.21	15.7	8903	65000	65000
8400	60.92	14.29	14.8	8961	65000	65000
8400	63.47	13.72	14.2	8998	65000	65000

5.5 IB/IBA RIDUTTORE - 900 RPM

IB153

Mn_2 [Nm]	i	Pn_1 [kW]	n2 [rpm]	Fr1 [N]	Fr2 D-S-P [N]	Fr2 C [N]
8400	71.15	12.24	12.7	9092	65000	65000
8400	77.22	11.28	11.7	9154	65000	65000
8400	83.89	10.38	10.7	9211	65000	65000
8400	87.65	9.94	10.3	9240	65000	65000
8400	93.05	9.36	9.7	9277	65000	65000
8400	103.12	8.45	8.7	9335	65000	65000
8400	123.88	7.03	7.3	9425	65000	65000
8400	134.27	6.49	6.7	9460	65000	65000
8400	149.26	5.83	6.0	9502	65000	65000
8400	165.42	5.26	5.4	9538	65000	65000

IB163

Mn_2 [Nm]	i	Pn_1 [kW]	n2 [rpm]	Fr1 [N]	Fr2 D-S-P [N]	Fr2 C [N]
7140	8.89	83.25	101.2	6911	54659	54659
8295	10.58	81.32	85.1	6990	56595	56595
8085	11.87	70.62	75.8	7428	59722	59722
9240	12.81	74.79	70.3	7257	59584	59584
10080	14.08	74.20	63.9	7281	60524	60524
10500	15.52	70.13	58.0	7448	62338	62338
10395	16.39	65.77	54.9	7626	63977	63977
10920	18.02	62.84	50.0	7746	65672	65000
11235	19.96	58.37	45.1	7929	68031	65000
10920	21.94	51.59	41.0	8206	71371	65000
11025	24.17	47.29	37.2	8383	74121	65000
11655	26.58	45.46	33.9	8457	75990	65000
10710	28.80	38.55	31.2	8740	80000	65000
12075	30.92	40.48	29.1	8661	80000	65000
12495	34.25	37.82	26.3	8770	80000	65000
12915	37.66	35.55	23.9	8863	80000	65000
13335	40.65	34.01	22.1	8926	80000	65000
12600	45.09	28.97	20.0	9132	80000	65000
13650	51.00	27.75	17.6	9182	80000	65000
13650	53.63	26.39	16.8	9238	80000	65000
13650	58.97	24.00	15.3	9336	80000	65000
13650	69.78	20.28	12.9	9488	80000	65000
13650	76.72	18.45	11.7	9563	80000	65000
13650	87.54	16.17	10.3	9656	80000	65000
13650	96.25	14.70	9.3	9716	80000	65000
13650	103.93	13.62	8.7	9761	80000	65000
13650	114.27	12.38	7.9	9811	80000	65000
13650	126.29	11.21	7.1	9859	80000	65000
13650	138.85	10.19	6.5	9901	80000	65000
13650	154.83	9.14	5.8	9944	80000	65000

5.6 IB/IBA RIDUTTORE - 700 RPM

IBA42

Mn_2 [Nm]	i	Pn_1 [kW]	n2 [rpm]	Fr1 [N]	Fr2 D-S-P [N]	Fr2 C [N]
96	7.62	0.95	91.9	373	-	2286
96	10.62	0.68	65.9	355	-	2554
96	12.95	0.56	54.1	406	-	2728
96	14.46	0.50	48.4	443	-	2830
128	16.47	0.59	42.5	579	-	2956
128	22.97	0.42	30.5	355	-	3303
128	28.00	0.35	25.0	406	-	3528
128	31.27	0.31	22.4	443	-	3660
128	33.78	0.29	20.7	458	-	3756
128	47.12	0.21	14.9	355	-	4000
128	57.43	0.17	12.2	406	-	4000
117	64.13	0.14	10.9	406	-	4000
117	78.17	0.11	9.0	406	-	4000

IBA52

Mn_2 [Nm]	i	Pn_1 [kW]	n2 [rpm]	Fr1 [N]	Fr2 D-S-P [N]	Fr2 C [N]
170	7.91	1.63	88.5	373	-	2480
170	9.46	1.37	74.0	414	-	2633
170	11.57	1.12	60.5	405	-	2816
170	14.63	0.88	47.9	392	-	3044
213	17.11	0.94	40.9	529	-	3208
213	20.46	0.79	34.2	414	-	3405
213	25.03	0.65	28.0	405	-	3641
213	31.63	0.51	22.1	392	-	3936
213	35.10	0.46	19.9	446	-	4000
213	41.97	0.38	16.7	414	-	4000
234	51.34	0.35	13.6	445	-	4000
213	64.87	0.25	10.8	356	-	4000
213	79.07	0.20	8.8	406	-	4000

IBA53

Mn_2 [Nm]	i	Pn_1 [kW]	n2 [rpm]	Fr1 [N]	Fr2 D-S-P [N]	Fr2 C [N]
234	73.70	0.25	9.5	472	-	4000
234	93.33	0.20	7.5	472	-	4000
234	111.61	0.17	6.3	472	-	4000
234	136.53	0.14	5.1	472	-	4000
234	172.53	0.11	4.1	472	-	4000
234	197.11	0.10	3.5	472	-	4000
234	249.08	0.08	2.8	472	-	4000
234	271.16	0.07	2.6	472	-	4000
234	342.65	0.05	2.0	472	-	4000

5.6 IB/IBA RIDUTTORE - 700 RPM

IBA72

Mn_2 [Nm]	i	Pn_1 [kW]	n2 [rpm]	Fr1 [N]	Fr2 D-S-P [N]	Fr2 C [N]
372	8.36	3.38	83.8	664	6399	3200
372	10.06	2.81	69.6	685	6807	3404
372	12.44	2.27	56.3	667	7307	3654
446	14.91	2.28	47.0	826	7761	3880
446	17.94	1.89	39.0	685	8255	4128
446	22.19	1.53	31.5	667	8862	4431
446	27.45	1.24	25.5	667	9512	4756
446	33.04	1.03	21.2	685	10000	5059
425	40.87	0.79	17.1	635	10000	5431
372	45.64	0.62	15.3	646	10000	5500
372	54.94	0.51	12.7	685	10000	5500
372	67.96	0.42	10.3	667	10000	5500

IBA73

Mn_2 [Nm]	i	Pn_1 [kW]	n2 [rpm]	Fr1 [N]	Fr2 D-S-P [N]	Fr2 C [N]
478	43.89	0.87	15.9	330	10000	5500
478	52.83	0.73	13.2	411	10000	5500
478	65.35	0.59	10.7	400	10000	5500
478	80.83	0.47	8.7	400	10000	5500
478	97.29	0.39	7.2	411	10000	5500
478	120.34	0.32	5.8	400	10000	5500
478	149.73	0.26	4.7	398	10000	5500
478	180.23	0.21	3.9	411	10000	5500
478	222.93	0.17	3.1	400	10000	5500
478	260.20	0.15	2.7	424	10000	5500
478	321.85	0.12	2.2	400	10000	5500
478	357.95	0.11	2.0	445	10000	5500
478	442.76	0.09	1.6	400	10000	5500

IB063

Mn_2 [Nm]	i	Pn_1 [kW]	n2 [rpm]	Fr1 [N]	Fr2 D-S-P [N]	Fr2 C [N]
308	5.71	4.33	122.5	259	9097	2599
361	6.88	4.21	101.8	283	9519	2720
372	7.32	4.07	95.6	313	9703	2772
489	9.16	4.28	76.4	269	10049	2871
553	10.26	4.32	68.2	261	10229	2923
574	11.03	4.17	63.5	292	10438	2982
616	12.35	4.00	56.7	329	10744	3070
627	13.15	3.82	53.2	367	10978	3137
627	15.18	3.31	46.1	477	11646	3327
638	17.00	3.01	41.2	543	12000	3472

5.6 IB/IBA RIDUTTORE - 700 RPM

IB063

Mn_2 [Nm]	i	Pn_1 [kW]	n2 [rpm]	Fr1 [N]	Fr2 D-S-P [N]	Fr2 C [N]
638	22.39	2.28	31.3	699	12000	3880
638	26.09	1.96	26.8	769	12000	4124
638	28.03	1.82	25.0	798	12000	4242
638	33.43	1.53	20.9	861	12000	4545
638	38.58	1.33	18.1	905	12000	4805
638	43.22	1.18	16.2	936	12000	5020
638	50.81	1.01	13.8	974	12000	5340
638	56.93	0.90	12.3	997	12000	5576
638	69.16	0.74	10.1	1032	12000	6000
638	77.48	0.66	9.0	1049	12000	6261
638	90.33	0.57	7.8	1069	12000	6629
638	101.20	0.51	6.9	1082	12000	6914
638	111.74	0.46	6.3	1092	12000	7171
638	124.20	0.41	5.6	1102	12000	7454
638	139.15	0.37	5.0	1112	12000	7771
638	157.42	0.32	4.5	1121	12000	8000

IB083

Mn_2 [Nm]	i	Pn_1 [kW]	n2 [rpm]	Fr1 [N]	Fr2 D-S-P [N]	Fr2 C [N]
531	7.81	5.46	89.6	1603	15452	4415
638	8.62	5.93	81.2	1482	15607	4459
691	10.49	5.28	66.7	1648	16610	4746
797	11.59	5.52	60.4	1588	16825	4807
861	14.43	4.79	48.5	1775	18000	5163
903	16.60	4.37	42.2	1882	18000	5405
903	18.32	3.95	38.2	1988	18000	5620
903	22.82	3.18	30.7	2187	18000	6120
903	26.71	2.71	26.2	2306	18000	6502
903	29.50	2.46	23.7	2371	18000	6753
903	31.80	2.28	22.0	2417	18000	6949
903	34.49	2.10	20.3	2462	18000	7166
903	39.60	1.83	17.7	2500	18000	7549
903	42.95	1.69	16.3	2500	18000	7783
903	45.44	1.59	15.4	2500	18000	7948
903	51.19	1.42	13.7	2500	18000	8309
903	55.52	1.31	12.6	2500	18000	8563
903	59.96	1.21	11.7	2500	18000	8810
903	63.74	1.14	11.0	2500	18000	9011
903	69.14	1.05	10.1	2500	18000	9284
903	73.14	0.99	9.6	2500	18000	9478
903	80.76	0.90	8.7	2500	18000	9828
903	92.19	0.79	7.6	2500	18000	10313
903	100.57	0.72	7.0	2500	18000	10644

5.6 IB/IBA RIDUTTORE - 700 RPM

IB083

Mn_2 [Nm]	i	Pn_1 [kW]	n2 [rpm]	Fr1 [N]	Fr2 D-S-P [N]	Fr2 C [N]
903	105.29	0.69	6.7	2500	18000	10822
903	116.25	0.62	6.0	2500	18000	11216
903	126.76	0.57	5.5	2500	18000	11571
903	144.77	0.50	4.8	2500	18000	12000

IB103

Mn_2 [Nm]	i	Pn_1 [kW]	n2 [rpm]	Fr1 [N]	Fr2 D-S-P [N]	Fr2 C [N]
850	8.13	8.39	86.1	959	19137	5468
956	8.97	8.56	78.1	920	19544	5584
1063	10.92	7.81	64.1	1100	20736	5925
1063	12.05	7.08	58.1	1276	21522	6149
1275	14.99	6.83	46.7	1336	22000	6498
1488	17.27	6.91	40.5	1316	22000	6685
1488	19.06	6.26	36.7	1472	22000	6946
1488	23.70	5.04	29.5	1768	22000	7556
1594	26.51	4.82	26.4	1819	22000	7800
1700	30.55	4.46	22.9	1905	22000	8149
1806	33.07	4.38	21.2	1925	22000	8314
1806	35.87	4.04	19.5	2007	22000	8581
1806	41.12	3.52	17.0	2132	22000	9045
1806	44.61	3.25	15.7	2198	22000	9331
1806	47.28	3.07	14.8	2242	22000	9541
1806	50.24	2.88	13.9	2286	22000	9764
1806	53.02	2.73	13.2	2322	22000	9966
1806	58.50	2.48	12.0	2384	22000	10344
1806	64.89	2.23	10.8	2443	22000	10755
1806	68.58	2.11	10.2	2472	22000	10980
1806	72.76	1.99	9.6	2501	22000	11226
1806	78.92	1.84	8.9	2538	22000	11572
1913	83.66	1.83	8.4	2539	22000	11738
1913	92.31	1.66	7.6	2580	22000	12177
1913	105.44	1.46	6.6	2630	22000	12794
1913	114.80	1.34	6.1	2659	22000	13203
1913	120.42	1.27	5.8	2674	22000	13438
1913	132.87	1.15	5.3	2702	22000	13933
1913	144.69	1.06	4.8	2725	22000	14376
1913	165.25	0.93	4.2	2757	22000	15000

IB123

Mn_2 [Nm]	i	Pn_1 [kW]	n2 [rpm]	Fr1 [N]	Fr2 D-S-P [N]	Fr2 C [N]
1594	7.97	16.05	87.9	2471	23098	6599

5.6 IB/IBA RIDUTTORE - 700 RPM

IB123

Mn_2 [Nm]	i	Pn_1 [kW]	n2 [rpm]	Fr1 [N]	Fr2 D-S-P [N]	Fr2 C [N]
1913	9.62	15.95	72.8	2480	23587	6739
2125	10.33	16.50	67.7	2428	23384	6681
2125	12.48	13.66	56.1	2699	25514	7290
2231	13.84	12.93	50.6	2768	26255	7501
2231	15.38	11.64	45.5	2892	27546	7870
2338	18.58	10.10	37.7	3039	29486	8425
2656	20.61	10.34	34.0	3015	29423	8407
2975	22.78	10.48	30.7	3002	29358	8388
2975	25.89	9.22	27.0	3122	30000	8918
2975	27.51	8.68	25.4	3174	30000	9178
2975	30.79	7.75	22.7	3262	30000	9674
2975	31.26	7.64	22.4	3273	30000	9742
2975	34.68	6.88	20.2	3345	30000	10217
2975	40.53	5.89	17.3	3440	30000	10963
3188	44.89	5.70	15.6	3458	30000	11193
3400	49.80	5.48	14.1	3479	30000	11450
3400	54.30	5.02	12.9	3522	30000	11911
3400	59.36	4.60	11.8	3563	30000	12399
3506	62.59	4.50	11.2	3573	30000	12557
3506	69.43	4.05	10.1	3615	30000	13155
3719	74.42	4.01	9.4	3619	30000	13287
3719	80.04	3.73	8.8	3646	30000	13729
3719	89.87	3.32	7.8	3685	30000	14454
3719	99.70	2.99	7.0	3716	30000	15128
3719	106.65	2.80	6.6	3734	30000	15579
3719	119.60	2.49	5.8	3763	30000	16367
3719	129.96	2.30	5.4	3782	30000	16958
3719	144.43	2.07	4.8	3804	30000	17732
3719	160.23	1.86	4.4	3824	30000	18520
3719	180.40	1.65	3.9	3843	30000	19455

IB143

Mn_2 [Nm]	i	Pn_1 [kW]	n2 [rpm]	Fr1 [N]	Fr2 D-S-P [N]	Fr2 C [N]
3188	10.84	23.60	64.6	2193	21383	21383
3294	11.87	22.27	59.0	2294	22002	22002
3294	14.49	18.25	48.3	2603	24212	24212
3400	17.04	16.01	41.1	2775	25785	25785
3825	18.66	16.45	37.5	2741	25542	25542
4250	21.00	16.24	33.3	2757	25686	25686
4675	22.77	16.47	30.7	2739	25396	25396
4888	25.63	15.30	27.3	2829	26320	26320
4888	27.44	14.29	25.5	2906	27277	27277
4994	30.05	13.34	23.3	2980	28240	28240

5.6 IB/IBA RIDUTTORE - 700 RPM

IB143

Mn_2 [Nm]	i	Pn_1 [kW]	n2 [rpm]	Fr1 [N]	Fr2 D-S-P [N]	Fr2 C [N]
4994	33.01	12.14	21.2	3071	29633	29633
5100	36.67	11.16	19.1	3147	30904	30904
5100	40.29	10.16	17.4	3223	32391	32391
5100	44.16	9.27	15.8	3292	33887	33887
5313	48.35	8.82	14.5	3326	34732	34732
5313	53.16	8.02	13.2	3387	36374	36374
5313	54.63	7.80	12.8	3404	36856	36856
5313	59.02	7.22	11.9	3448	38246	38246
5313	64.88	6.57	10.8	3499	39999	39999
5313	70.43	6.05	9.9	3538	40000	40000
5313	77.12	5.53	9.1	3578	40000	40000
5313	85.54	4.98	8.2	3620	40000	40000
5313	94.13	4.53	7.4	3655	40000	40000
5313	105.83	4.03	6.6	3693	40000	40000
5313	111.94	3.81	6.2	3710	40000	40000
5313	124.62	3.42	5.6	3740	40000	40000
5313	136.44	3.12	5.1	3763	40000	40000
5313	149.59	2.85	4.7	3784	40000	40000
5313	166.53	2.56	4.2	3806	40000	40000
5313	187.24	2.28	3.7	3828	40000	40000

IB153

Mn_2 [Nm]	i	Pn_1 [kW]	n2 [rpm]	Fr1 [N]	Fr2 D-S-P [N]	Fr2 C [N]
4781	10.49	36.56	66.7	6854	42333	42333
4781	12.64	30.35	55.4	7368	45464	45464
5313	14.01	30.43	50.0	7362	46495	46495
5313	15.40	27.68	45.5	7588	48216	48216
6375	18.56	27.57	37.7	7598	50211	50211
6906	20.56	26.95	34.0	7649	51486	51486
7119	23.86	23.94	29.3	7897	54271	54271
7225	25.19	23.02	27.8	7974	55283	55283
8500	28.23	24.16	24.8	7879	55940	55940
8500	30.35	22.47	23.1	8018	57593	57593
8500	33.63	20.28	20.8	8200	60009	60009
8500	35.02	19.48	20.0	8266	60981	60981
8500	38.81	17.57	18.0	8423	63514	63514
8500	42.30	16.13	16.6	8543	65000	65000
8500	47.53	14.35	14.7	8690	65000	65000
8500	50.56	13.49	13.8	8761	65000	65000
8500	54.64	12.48	12.8	8844	65000	65000
8500	57.27	11.91	12.2	8891	65000	65000
8500	60.92	11.19	11.5	8950	65000	65000
8500	63.47	10.75	11.0	8987	65000	65000

5.6 IB/IBA RIDUTTORE - 700 RPM

IB153

Mn_2 [Nm]	i	Pn_1 [kW]	n2 [rpm]	Fr1 [N]	Fr2 D-S-P [N]	Fr2 C [N]
8500	71.15	9.59	9.8	9083	65000	65000
8500	77.22	8.83	9.1	9145	65000	65000
8500	83.89	8.13	8.3	9203	65000	65000
8500	87.65	7.78	8.0	9232	65000	65000
8500	93.05	7.33	7.5	9269	65000	65000
8500	103.12	6.61	6.8	9329	65000	65000
8500	123.88	5.51	5.7	9420	65000	65000
8500	134.27	5.08	5.2	9455	65000	65000
8500	149.26	4.57	4.7	9497	65000	65000
8500	165.42	4.12	4.2	9534	65000	65000

IB163

Mn_2 [Nm]	i	Pn_1 [kW]	n2 [rpm]	Fr1 [N]	Fr2 D-S-P [N]	Fr2 C [N]
7225	8.89	65.20	78.7	6870	60316	60316
8394	10.58	63.69	66.2	6950	62569	62569
8181	11.87	55.31	59.0	7393	65940	65000
9350	12.81	58.57	54.6	7221	65940	65000
10200	14.08	58.11	49.7	7245	67071	65000
10625	15.52	54.93	45.1	7413	69097	65000
10519	16.39	51.51	42.7	7594	70864	65000
11050	18.02	49.21	38.9	7715	72773	65000
11369	19.96	45.71	35.1	7901	75377	65000
11050	21.94	40.41	31.9	8181	78965	65000
11156	24.17	37.03	29.0	8360	80000	65000
11794	26.58	35.61	26.3	8435	80000	65000
10838	28.80	30.19	24.3	8721	80000	65000
12219	30.92	31.71	22.6	8641	80000	65000
12644	34.25	29.62	20.4	8752	80000	65000
13069	37.66	27.84	18.6	8846	80000	65000
13494	40.65	26.63	17.2	8909	80000	65000
12750	45.09	22.69	15.5	9118	80000	65000
13813	51.00	21.73	13.7	9169	80000	65000
13813	53.63	20.67	13.1	9225	80000	65000
13813	58.97	18.80	11.9	9324	80000	65000
13813	69.78	15.88	10.0	9478	80000	65000
13813	76.72	14.45	9.1	9554	80000	65000
13813	87.54	12.66	8.0	9648	80000	65000
13813	96.25	11.52	7.3	9709	80000	65000
13813	103.93	10.66	6.7	9754	80000	65000
13813	114.27	9.70	6.1	9805	80000	65000
13813	126.29	8.78	5.5	9854	80000	65000
13813	138.85	7.98	5.0	9896	80000	65000
13813	154.83	7.16	4.5	9939	80000	65000

5.7 IB/IBA RIDUTTORE - 500 RPM

IBA42

Mn_2 [Nm]	i	Pn_1 [kW]	n2 [rpm]	Fr1 [N]	Fr2 D-S-P [N]	Fr2 C [N]
97	7.62	0.69	65.7	373	-	2557
97	10.62	0.49	47.1	355	-	2857
97	12.95	0.40	38.6	406	-	3052
97	14.46	0.36	34.6	443	-	3166
129	16.47	0.42	30.4	579	-	3307
129	22.97	0.30	21.8	355	-	3695
129	28.00	0.25	17.9	406	-	3946
129	31.27	0.22	16.0	443	-	4000
129	33.78	0.21	14.8	458	-	4000
129	47.12	0.15	10.6	355	-	4000
129	57.43	0.12	8.7	406	-	4000
118	64.13	0.10	7.8	406	-	4000
118	78.17	0.08	6.4	406	-	4000

IBA52

Mn_2 [Nm]	i	Pn_1 [kW]	n2 [rpm]	Fr1 [N]	Fr2 D-S-P [N]	Fr2 C [N]
172	7.91	1.17	63.2	373	-	2775
172	9.46	0.98	52.9	414	-	2945
172	11.57	0.80	43.2	405	-	3150
172	14.63	0.64	34.2	392	-	3405
215	17.11	0.68	29.2	529	-	3588
215	20.46	0.57	24.4	414	-	3809
215	25.03	0.46	20.0	405	-	4000
215	31.63	0.37	15.8	392	-	4000
215	35.10	0.33	14.2	446	-	4000
215	41.97	0.28	11.9	414	-	4000
237	51.34	0.25	9.7	445	-	4000
215	64.87	0.18	7.7	356	-	4000
215	79.07	0.15	6.3	406	-	4000

IBA53

Mn_2 [Nm]	i	Pn_1 [kW]	n2 [rpm]	Fr1 [N]	Fr2 D-S-P [N]	Fr2 C [N]
237	73.70	0.18	6.8	472	-	4000
237	93.33	0.14	5.4	472	-	4000
237	111.61	0.12	4.5	472	-	4000
237	136.53	0.10	3.7	472	-	4000
237	172.53	0.08	2.9	472	-	4000
237	197.11	0.07	2.5	472	-	4000
237	249.08	0.05	2.0	472	-	4000
237	271.16	0.05	1.8	472	-	4000
237	342.65	0.04	1.5	472	-	4000

5.7 IB/IBA RIDUTTORE - 500 RPM

IBA72

Mn_2 [Nm]	i	Pn_1 [kW]	n2 [rpm]	Fr1 [N]	Fr2 D-S-P [N]	Fr2 C [N]
376	8.36	2.43	59.8	664	7159	3579
376	10.06	2.02	49.7	685	7615	3808
376	12.44	1.63	40.2	667	8174	4087
452	14.91	1.64	33.5	826	8682	4341
452	17.94	1.36	27.9	685	9235	4618
452	22.19	1.10	22.5	667	9913	4957
452	27.45	0.89	18.2	667	10000	5321
452	33.04	0.74	15.1	685	10000	5500
430	40.87	0.57	12.2	635	10000	5500
376	45.64	0.45	10.9	646	10000	5500
376	54.94	0.37	9.1	685	10000	5500
376	67.96	0.30	7.4	667	10000	5500

IBA73

Mn_2 [Nm]	i	Pn_1 [kW]	n2 [rpm]	Fr1 [N]	Fr2 D-S-P [N]	Fr2 C [N]
484	43.89	0.63	11.4	330	10000	5500
484	52.83	0.52	9.5	411	10000	5500
484	65.35	0.42	7.7	400	10000	5500
484	80.83	0.34	6.2	400	10000	5500
484	97.29	0.28	5.1	411	10000	5500
484	120.34	0.23	4.2	400	10000	5500
484	149.73	0.18	3.3	398	10000	5500
484	180.23	0.15	2.8	411	10000	5500
484	222.93	0.12	2.2	400	10000	5500
484	260.20	0.11	1.9	424	10000	5500
484	321.85	0.09	1.6	400	10000	5500
484	357.95	0.08	1.4	445	10000	5500
484	442.76	0.06	1.1	400	10000	5500

IB063

Mn_2 [Nm]	i	Pn_1 [kW]	n2 [rpm]	Fr1 [N]	Fr2 D-S-P [N]	Fr2 C [N]
312	5.71	3.11	87.5	248	10312	2946
366	6.88	3.03	72.7	273	10809	3088
376	7.32	2.93	68.3	303	11020	3149
495	9.16	3.08	54.6	258	11462	3275
559	10.26	3.11	48.7	250	11694	3341
581	11.03	3.00	45.3	281	11938	3411
624	12.35	2.88	40.5	319	12000	3514
634	13.15	2.75	38.0	358	12000	3590
634	15.18	2.38	33.0	469	12000	3804
645	17.00	2.16	29.4	535	12000	3966

5.7 IB/IBA RIDUTTORE - 500 RPM

IB063

Mn_2 [Nm]	i	Pn_1 [kW]	n2 [rpm]	Fr1 [N]	Fr2 D-S-P [N]	Fr2 C [N]
645	22.39	1.64	22.3	693	12000	4423
645	26.09	1.41	19.2	764	12000	4695
645	28.03	1.31	17.8	793	12000	4827
645	33.43	1.10	15.0	858	12000	5166
645	38.58	0.95	13.0	902	12000	5456
645	43.22	0.85	11.6	933	12000	5696
645	50.81	0.72	9.8	972	12000	6054
645	56.93	0.65	8.8	995	12000	6317
645	69.16	0.53	7.2	1030	12000	6792
645	77.48	0.47	6.5	1047	12000	7083
645	90.33	0.41	5.5	1068	12000	7494
645	101.20	0.36	4.9	1081	12000	7812
645	111.74	0.33	4.5	1091	12000	8000
645	124.20	0.30	4.0	1101	12000	8000
645	139.15	0.26	3.6	1111	12000	8000
645	157.42	0.23	3.2	1120	12000	8000

IB083

Mn_2 [Nm]	i	Pn_1 [kW]	n2 [rpm]	Fr1 [N]	Fr2 D-S-P [N]	Fr2 C [N]
538	7.81	3.93	64.0	1587	17494	4998
645	8.62	4.27	58.0	1464	17713	5061
699	10.49	3.80	47.6	1633	18000	5387
806	11.59	3.97	43.1	1571	18000	5469
871	14.43	3.44	34.6	1761	18000	5875
914	16.60	3.14	30.1	1869	18000	6150
914	18.32	2.84	27.3	1976	18000	6390
914	22.82	2.28	21.9	2177	18000	6949
914	26.71	1.95	18.7	2297	18000	7376
914	29.50	1.77	16.9	2364	18000	7657
914	31.80	1.64	15.7	2410	18000	7875
914	34.49	1.51	14.5	2456	18000	8118
914	39.60	1.32	12.6	2500	18000	8546
914	42.95	1.21	11.6	2500	18000	8807
914	45.44	1.15	11.0	2500	18000	8992
914	51.19	1.02	9.8	2500	18000	9395
914	55.52	0.94	9.0	2500	18000	9679
914	59.96	0.87	8.3	2500	18000	9955
914	63.74	0.82	7.8	2500	18000	10179
914	69.14	0.75	7.2	2500	18000	10485
914	73.14	0.71	6.8	2500	18000	10701
914	80.76	0.65	6.2	2500	18000	11092
914	92.19	0.57	5.4	2500	18000	11634
914	100.57	0.52	5.0	2500	18000	12000

5.7 IB/IBA RIDUTTORE - 500 RPM

IB083

Mn_2 [Nm]	i	Pn_1 [kW]	n2 [rpm]	Fr1 [N]	Fr2 D-S-P [N]	Fr2 C [N]
914	105.29	0.49	4.8	2500	18000	12000
914	116.25	0.45	4.3	2500	18000	12000
914	126.76	0.41	3.9	2500	18000	12000
914	144.77	0.36	3.5	2500	18000	12000

IB103

Mn_2 [Nm]	i	Pn_1 [kW]	n2 [rpm]	Fr1 [N]	Fr2 D-S-P [N]	Fr2 C [N]
860	8.13	6.04	61.5	935	21643	6184
968	8.97	6.15	55.8	895	22000	6323
1075	10.92	5.61	45.8	1078	22000	6713
1075	12.05	5.09	41.5	1256	22000	6963
1290	14.99	4.91	33.4	1317	22000	7372
1505	17.27	4.97	28.9	1296	22000	7600
1505	19.06	4.50	26.2	1454	22000	7891
1505	23.70	3.62	21.1	1753	22000	8572
1613	26.51	3.47	18.9	1805	22000	8854
1720	30.55	3.21	16.4	1893	22000	9254
1828	33.07	3.15	15.1	1912	22000	9447
1828	35.87	2.91	13.9	1996	22000	9745
1828	41.12	2.53	12.2	2122	22000	10264
1828	44.61	2.34	11.2	2189	22000	10584
1828	47.28	2.20	10.6	2234	22000	10819
1828	50.24	2.07	9.9	2278	22000	11068
1828	53.02	1.97	9.4	2315	22000	11293
1828	58.50	1.78	8.6	2377	22000	11715
1828	64.89	1.61	7.7	2436	22000	12175
1828	68.58	1.52	7.3	2466	22000	12427
1828	72.76	1.43	6.9	2495	22000	12701
1828	78.92	1.32	6.3	2533	22000	13088
1935	83.66	1.32	6.0	2534	22000	13283
1935	92.31	1.20	5.4	2576	22000	13773
1935	105.44	1.05	4.7	2626	22000	14463
1935	114.80	0.96	4.4	2655	22000	14920
1935	120.42	0.92	4.2	2670	22000	15000
1935	132.87	0.83	3.8	2699	22000	15000
1935	144.69	0.76	3.5	2722	22000	15000
1935	165.25	0.67	3.0	2754	22000	15000

IB123

Mn_2 [Nm]	i	Pn_1 [kW]	n2 [rpm]	Fr1 [N]	Fr2 D-S-P [N]	Fr2 C [N]
1613	7.97	11.54	62.8	2453	26584	7595

5.7 IB/IBA RIDUTTORE - 500 RPM

IB123

Mn_2 [Nm]	i	Pn_1 [kW]	n2 [rpm]	Fr1 [N]	Fr2 D-S-P [N]	Fr2 C [N]
1935	9.62	11.47	52.0	2462	27285	7796
2150	10.33	11.87	48.4	2410	27163	7761
2150	12.48	9.83	40.1	2683	29542	8441
2258	13.84	9.30	36.1	2754	30000	8692
2258	15.38	8.37	32.5	2878	30000	9104
2365	18.58	7.26	26.9	3027	30000	9738
2688	20.61	7.44	24.3	3004	30000	9762
3010	22.78	7.54	21.9	2990	30000	9786
3010	25.89	6.63	19.3	3112	30000	10378
3010	27.51	6.24	18.2	3164	30000	10668
3010	30.79	5.57	16.2	3253	30000	11223
3010	31.26	5.49	16.0	3265	30000	11299
3010	34.68	4.95	14.4	3337	30000	11830
3010	40.53	4.24	12.3	3433	30000	12663
3225	44.89	4.10	11.1	3452	30000	12950
3440	49.80	3.94	10.0	3473	30000	13267
3440	54.30	3.61	9.2	3517	30000	13782
3440	59.36	3.31	8.4	3558	30000	14327
3548	62.59	3.23	8.0	3568	30000	14518
3548	69.43	2.91	7.2	3610	30000	15187
3763	74.42	2.88	6.7	3614	30000	15364
3763	80.04	2.68	6.2	3642	30000	15858
3763	89.87	2.39	5.6	3681	30000	16668
3763	99.70	2.15	5.0	3712	30000	17421
3763	106.65	2.01	4.7	3731	30000	17925
3763	119.60	1.79	4.2	3761	30000	18805
3763	129.96	1.65	3.9	3780	30000	19466
3763	144.43	1.49	3.5	3802	30000	20000
3763	160.23	1.34	3.1	3822	30000	20000
3763	180.40	1.19	2.8	3842	30000	20000

IB143

Mn_2 [Nm]	i	Pn_1 [kW]	n2 [rpm]	Fr1 [N]	Fr2 D-S-P [N]	Fr2 C [N]
3225	10.84	16.97	46.1	2171	24968	24968
3333	11.87	16.02	42.1	2274	25696	25696
3333	14.49	13.12	34.5	2587	28165	28165
3440	17.04	11.51	29.3	2760	29959	29959
3870	18.66	11.83	26.8	2726	29831	29831
4300	21.00	11.68	23.8	2742	30135	30135
4730	22.77	11.85	22.0	2724	29954	29954
4945	25.63	11.00	19.5	2815	31059	31059
4945	27.44	10.28	18.2	2894	32128	32128
5053	30.05	9.59	16.6	2968	33240	33240

5.7 IB/IBA RIDUTTORE - 500 RPM

IB143

Mn_2 [Nm]	i	Pn_1 [kW]	n2 [rpm]	Fr1 [N]	Fr2 D-S-P [N]	Fr2 C [N]
5053	33.01	8.73	15.2	3060	34796	34796
5160	36.67	8.02	13.6	3137	36252	36252
5160	40.29	7.30	12.4	3214	37914	37914
5160	44.16	6.66	11.3	3283	39586	39586
5375	48.35	6.34	10.3	3318	40000	40000
5375	53.16	5.77	9.4	3380	40000	40000
5375	54.63	5.61	9.2	3397	40000	40000
5375	59.02	5.19	8.5	3442	40000	40000
5375	64.88	4.72	7.7	3493	40000	40000
5375	70.43	4.35	7.1	3533	40000	40000
5375	77.12	3.98	6.5	3573	40000	40000
5375	85.54	3.58	5.8	3616	40000	40000
5375	94.13	3.26	5.3	3651	40000	40000
5375	105.83	2.90	4.7	3690	40000	40000
5375	111.94	2.74	4.5	3707	40000	40000
5375	124.62	2.46	4.0	3737	40000	40000
5375	136.44	2.25	3.7	3760	40000	40000
5375	149.59	2.05	3.3	3781	40000	40000
5375	166.53	1.84	3.0	3804	40000	40000
5375	187.24	1.64	2.7	3826	40000	40000

IB153

Mn_2 [Nm]	i	Pn_1 [kW]	n2 [rpm]	Fr1 [N]	Fr2 D-S-P [N]	Fr2 C [N]
4838	10.49	26.30	47.6	6819	48046	48046
4838	12.64	21.82	39.5	7339	51544	51544
5375	14.01	21.88	35.7	7332	52779	52779
5375	15.40	19.91	32.5	7561	54701	54701
6450	18.56	19.83	26.9	7571	57095	57095
6988	20.56	19.38	24.3	7623	58602	58602
7203	23.86	17.22	21.0	7874	61748	61748
7310	25.19	16.55	19.9	7951	62895	62895
8600	28.23	17.37	17.7	7856	63827	63827
8600	30.35	16.16	16.5	7997	65000	65000
8600	33.63	14.58	14.9	8180	65000	65000
8600	35.02	14.01	14.3	8247	65000	65000
8600	38.81	12.64	12.9	8406	65000	65000
8600	42.30	11.60	11.8	8527	65000	65000
8600	47.53	10.32	10.5	8676	65000	65000
8600	50.56	9.70	9.9	8748	65000	65000
8600	54.64	8.98	9.2	8832	65000	65000
8600	57.27	8.56	8.7	8880	65000	65000
8600	60.92	8.05	8.2	8939	65000	65000
8600	63.47	7.73	7.9	8977	65000	65000

5.7 IB/IBA RIDUTTORE - 500 RPM

IB153

Mn_2 [Nm]	i	Pn_1 [kW]	n2 [rpm]	Fr1 [N]	Fr2 D-S-P [N]	Fr2 C [N]
8600	71.15	6.89	7.0	9074	65000	65000
8600	77.22	6.35	6.5	9137	65000	65000
8600	83.89	5.85	6.0	9195	65000	65000
8600	87.65	5.60	5.7	9225	65000	65000
8600	93.05	5.27	5.4	9262	65000	65000
8600	103.12	4.76	4.8	9322	65000	65000
8600	123.88	3.96	4.0	9415	65000	65000
8600	134.27	3.65	3.7	9450	65000	65000
8600	149.26	3.29	3.4	9493	65000	65000
8600	165.42	2.97	3.0	9530	65000	65000

IB163

Mn_2 [Nm]	i	Pn_1 [kW]	n2 [rpm]	Fr1 [N]	Fr2 D-S-P [N]	Fr2 C [N]
7310	8.89	46.89	56.2	6830	68733	65000
8493	10.58	45.80	47.3	6910	71467	65000
8278	11.87	39.77	42.1	7359	75194	65000
9460	12.81	42.12	39.0	7184	75410	65000
10320	14.08	41.79	35.5	7209	76831	65000
10750	15.52	39.50	32.2	7379	79173	65000
10643	16.39	37.04	30.5	7562	80000	65000
11180	18.02	35.39	27.8	7685	80000	65000
11503	19.96	32.87	25.1	7872	80000	65000
11180	21.94	29.06	22.8	8156	80000	65000
11288	24.17	26.63	20.7	8337	80000	65000
11933	26.58	25.61	18.8	8413	80000	65000
10965	28.80	21.71	17.4	8702	80000	65000
12363	30.92	22.80	16.2	8622	80000	65000
12793	34.25	21.30	14.6	8733	80000	65000
13223	37.66	20.02	13.3	8828	80000	65000
13653	40.65	19.15	12.3	8893	80000	65000
12900	45.09	16.32	11.1	9104	80000	65000
13975	51.00	15.63	9.8	9155	80000	65000
13975	53.63	14.86	9.3	9212	80000	65000
13975	58.97	13.52	8.5	9312	80000	65000
13975	69.78	11.42	7.2	9468	80000	65000
13975	76.72	10.39	6.5	9545	80000	65000
13975	87.54	9.11	5.7	9641	80000	65000
13975	96.25	8.28	5.2	9702	80000	65000
13975	103.93	7.67	4.8	9747	80000	65000
13975	114.27	6.97	4.4	9799	80000	65000
13975	126.29	6.31	4.0	9848	80000	65000
13975	138.85	5.74	3.6	9891	80000	65000
13975	154.83	5.15	3.2	9935	80000	65000

6.1 CONDIZIONI DI VENDITA

Tutte le forniture effettuate da Motovario si intendono regolate esclusivamente dalle condizioni generali di vendita disponibili sul nostro sito:

http://www.motovario.com/ita/corporate/condizioni-di-vendita