TECHNICAL CATALOGUE

H SERIES

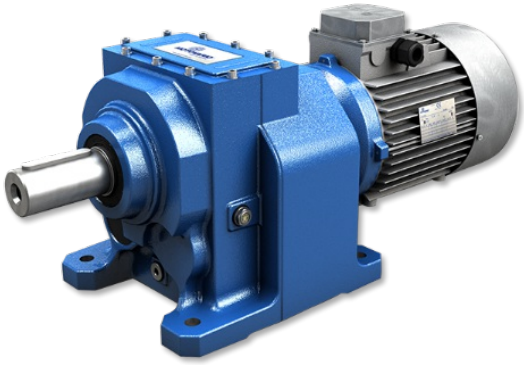

HELICAL GEARED MOTORS

STANDARD **IEC**

DIRECTIVE **ATEX** Ex

MOTOVARIO®

HEART OF MOTION

a TECO Group company

INDEX

1. GENERAL INFORMATION

1.1 ATEX 5

1.2 SYMBOLS AND FORMULAS 6

1.2.1 Symbols 6

1.2.2 Formulas 7

1.3 PRODUCT SELECTION 8

1.4 INSTALLATION 9

2. PRODUCT INFORMATION

2.1 DESIGN FEATURES 10

2.2 TYPOLOGY 11

2.2.1 Designation 11

2.2.2 Versions 12

2.2.3 Modularity 14

2.3 MOUNTING POSITIONS 16

2.3.1 Mounting positions 16

2.3.2 Position of terminal box 17

2.4 THERMAL POWER 18

2.4.1 Information 18

2.4.2 Verification 18

2.5 CRITICAL APPLICATIONS 19

2.5.1 Critical applications 19

2.5.2 Information 19

2.6 MOTOR FLANGE AVAILABILITY 20

2.6.1 HA Motor flange availability 20

2.6.2 H Motor flange availability 21

2.7 OUTPUT SHAFT BEARINGS 25

2.8 OVERHUNG LOAD 26

2.8.1 Information 26

2.8.2 Input 26

2.8.3 Output 27

2.9 LUBRICATION 28

2.9.1 Information 28

INDEX

2.9.2 Lubricants 28
2.9.3 Special lubricants 29
2.9.4 Quantity 30

2.10 MOMENTS OF INERTIA 31

3. DIMENSIONS

3.1 REDUCERS/GEARED MOTORS 32
3.1.1 HA31 32
3.1.2 HA.1 33
3.1.3 CHA.1 34
3.1.4 IHA.1 35
3.1.5 HA.2 36
3.1.6 CHA.2 38
3.1.7 IHA.2 40
3.1.8 HA.3 42
3.1.9 CHA.3 44
3.1.10 IHA.3 46
3.1.11 H..1 48
3.1.12 CH..1 50
3.1.13 IH..1 52
3.1.14 H..2/3 54
3.1.15 CH..2/3 56
3.1.16 IH..2/3 58

3.2 ELECTRIC MOTORS 60
3.2.1 Electric motors 60
3.2.2 Standard high efficiency (TS), high (TH) and premium (TP) motors 62
3.2.3 Nominal power - [kW] 63

3.3 WEIGHT 64

3.4 END SHAFT 66

4. ACCESSORIES AND OPTIONS

4.1 BACKSTOP DEVICE 67

4.2 REINFORCED OIL SEALS FOR OUTPUT SHAFT 68

INDEX

5. PERFORMANCES

5.1 H/HA GEARED MOTORS (50Hz) 69

5.2 IH/IHA GEAR REDUCER - 1750 RPM 200

5.3 IH/IHA GEAR REDUCER - 1400 RPM 214

5.4 IH/IHA GEAR REDUCER - 1140 RPM 228

5.5 IH/IHA GEAR REDUCER - 900 RPM 242

5.6 IH/IHA GEAR REDUCER - 700 RPM 256

5.7 IH/IHA GEAR REDUCER - 500 RPM 270

6. SALES CONDITIONS

6.1 SALES CONDITIONS 284

1.1 ATEX

ATEX Certification

The gear reducers described in this catalogue, defined as “ATEX”, were designed and manufactured in compliance with: Directive **ATEX 2014/34/UE.**
If used by following the instructions set forth in the INSTALLATION AND USE INSTRUCTIONS Atex Manual (provided as an attachment to the supplied products), ATEX MOTOVARIO gear reducers can be used in one of the following environments:

Group II
Category 2G and 2D
Zone 1/21 for gases and dusts (gas group IIB) with the following protection methods:
Protection against ignition:
EN13463-5 (c) constructional safety
EN13463-8 (k) liquid immersion

Group II
Category 3G and 3D
Zone 2/22 for gases and dusts
Protection against ignition:
EN13463-5 (c) constructional safety

The room temperature envisaged for the application must range between -20 and + 40 °C (*).
The products certified for use in Zone 1/21 can be used also in Zone 2/22. To identify the environment inside which the Atex certification of the special gear reducer is limited, refer to Atex Performance Tables.

The classified units are manufactured and marked to comply with the provisions of Directive **ATEX 2014/34/UE**.

UNINTENDED USE
It is strictly forbidden to use the gear reducer:

- inside an area with equipment category I (mines likely to become endangered by firedamp);
- inside an Area classified as more severe than specified on product label;
- at a room temperature not falling within the specified limits (*);
- under conditions (P1, n1, M2) that, even individually, exceed the values specified inside Atex Performance Tables.

1.2 SYMBOLS AND FORMULAS

1.2.1 Symbols

Physical dimension	Symbol	Symbol units of measure	Input	Output
Power	P	[kW]	P_1	P_2
Requested power	Pr	[kW]	Pr_1	Pr_2
Nominal power	Pn	[kW]	Pn_1	Pn_2
Torque	M	[Nm]	M_1	M_2
Nominal torque	Mn	[Nm]		Mn_2
Requested torque	Mr	[Nm]	Mr_1	Mr_2
Speed	n	[rpm]	n_1	n_2
Force	F	[N]		
Radial load	Fr	[N]	Fr_1	Fr_2
Axial load	Fa	[N]	Fa_1	Fa_2
Reduction ratio	i			
Dynamic efficiency	η_d			
Service factor	f.s.			
Static	s			
Dynamic	d			
Calculated	c			
Maximum	max			
Minimum	min			
Moment of inertia	J	[kgm^2]	J_1	
Ambient temperature	T_{amb}	[°C]		
Dimension		[mm]		

1.2 SYMBOLS AND FORMULAS

1.2.2 Formulas

REDUCER		
Starting or stopping time	$t = v / a$	[s]
Velocity in rotary motion	$v = \pi * d * n / 60$ $v = \omega * r$	[m/s]
Speed velocity Angular velocity	$n = 60 * v / (\pi * d)$ $\omega = v / r$	[rpm] [rad/s]
Acceleration or deceleration according to a starting / stopping time	$a = v / t$	[m/s^2]
Angular acceleration	$\alpha = n / (9{,}55 * t)$ $\alpha = \omega / t$	[rad/s^2]
Starting or stopping distance (according to acceleration / deceleration or angular velocity)	$s = a * t^2 / 2$ $s = v * t / 2$	[m]
Horizontal translation force	$F = \mu * m * g$	[N]
Vertical translation force (lifting)	$F = m * g$	
Inclined plane translation force	$F = m * g (\mu * \cos\beta + \mathrm{sen}\beta)$	
m= mass [kg]; g= gravity acceleration [m/s^2]; μ= friction coefficent; β= angle of inclination		
Moment of inertia	$J = m * v^2 / \omega^2$	[kgm^2]
Torque	$M = F * d / 2$ $M = J * \omega / t$	[Nm]

MOTOR and GEARMOTOR		
Starting time	$ta = (Jext+Jm)*n_n/9{,}55+(M_{peak}-Mr)$	[s]
Braking time	$ts = (Jext+Jm)*n_n/9{,}55+(M_{peak}+Mr)$	[s]
Motor rotation angle during starting	$\varphi = n_n * ta / 19{,}1$	[rad]
Motor rotation angle during braking	$\varphi = n_n * ts / 19{,}1$	[rad]
Power available at the shaft of single phase motor	$P = V * I * \eta * \cos\omega$	[W]
Power available at the shaft of three phase motor	$P = 1{,}73 * V * I * \eta * \cos\omega$	[W]

RUNNING at 60Hz		
Speed velocity at 60Hz	$n_{60Hz} = 1{,}2 * n_{50Hz}$	[rpm]
Power at 60Hz	$P1_{60Hz} = P1_{50Hz} * V_{60Hz}/V_{50Hz}$	[kW]
If input voltage at 60 Hz (V_{60Hz}) corresponds to winding voltage at 50 Hz (V_{50Hz}), power doesn't change $P1_{60Hz} = P1_{50Hz}$ If input voltage at 60 Hz (V_{60Hz}) is 20% higher than winding voltage at 50 Hz (V_{50Hz}), power increases by 20% $P1_{60Hz} = 1{,}2\ P1_{50Hz}$		
Torque at 60Hz	$M_{60hz} = M_{50Hz} * P1_{60Hz} / (1{,}2 * P1_{50Hz})$	[Nm]
Service factor at 60Hz	$f.s._{60Hz} = f.s._{50Hz} * 1{,}175 * P1_{50Hz} / P1_{60Hz}$	-

1.3 PRODUCT SELECTION

For correctly selecting a gear reducer or geared motor, several essential pieces of data are required:

1. The rotational input speed to the gear reducer **(n_1)** and the rotational output speed **(n_2).** Through these two values it is possible to calculate the reduction ratio **(i)** of the gear reducer using the following formula: **$i=n_1/n_2$**
2. The torque required by the application **(Mr_2)**.

The geared motor or gear reducer can be selected once this data is known.
This guide helps you to select the right product in just a few steps:

Geared motor selection

1. Determine the application's actual service factor **(s.f.)**. This parameter depends on the type of load of the powered machine, the number of starts per hour and the hours of operation (refer to the "Service factor" paragraph).
2. Calculate the input power **Pr_1** using the required torque value **Mr_2**, the speed **n_2** and dynamic efficiency value. **$Pr1=(Mr_2*n_2)/(9550*\eta_d)$.** The dynamic efficiency value depends on the type of gear reducer and on the number of gear reduction stages. (To calculate the efficiency value see its page).
3. Consult the geared motor performance tables and identify a normalised power value **Pn_1** exceeding the required power **Pr_1**, such that: **$Pn_1 \geq Pr_1$**
4. Once the suitable nominal power has been identified, select the geared motor capable of generating the rotational speed closest to the desired n_2 value and with service factor s.f. greater or equal to that required by the application.

For Atex product selection, use the service factor "f.s. Atex".

In the geared motor selection tables the combinations include 2-pole, 4-pole and 6-pole motors powered at 50Hz.

Gear reducer selection

1. Determine the application's service factor **(s.f.)** (consult to the "Service factor" paragraph on its page) .
2. Calculate the reduction ratio i from the requested output speed **n_2** and from the input speed **n1. $i=n_1/n_2$**
3. Calculate the torque **Mc_2** for selecting the gear reducer through the torque required by the application **Mr_2** and the service factor s.f.: **$Mc_2=Mr_2*(f.s.)$**
4. Consult the Gear Reducer Performance tables looking for the reducer that, with the reduction ratio closer to the calculated one, has a nominal torque **Mn_2** so that: **$Mn_2 \geq Mc_2$**

For Atex product Selection, refer to Atex Gear Reducer Performance tables.

Checks

Once the gear reducer or geared motor has been selected, the following checks should be performed:

A. **Thermal power**

The gear reducer's thermal power must be equal to or greater than the installed mechanical power, or the power required by the application according to the indications contained in the section (refer to the "Thermal power" paragraph).

B. **Maximum torque**

Generally, the maximum torque (peak instantaneous load) that can be applied to the gear reducer must not exceed 200% of the nominal torque **Mn_2** (ATEX - M_2max).

C. **Radial loads**

1. Verify that the radial loads acting on the input and/or output shafts are within with the values indicated in the catalogue. If they exceed these values, increase the size of the gear reducer or modify the external load capacity. During the checking phase, it is important to remember that the values indicated in the catalogue refer to loads acting on the mid-point of the shaft protrusion, therefore, if the load is applied to a different position, appropriate formulas must be used to calculate the admissible load in the desired position (refer to the "Radial loads" paragraph).
2. If accessory output shafts are present, make sure that the applied load is compatible with shaft size. If help is needed: contact MOTOVARIO TECHNICAL SERVICE.

D. If an electric motor is going to be fitted to the selected gear reducer, check for its applicability by referring to the configuration table (see paragraph "Configurations"). From IEC 180 motors, verify if necessary to support the motor with feet. In case of need please contact MOTOVARIO TECHNICAL SERVICE.

(Atex version, only) Consult catalogue to make sure that Version, Mounting and Accessories meet Atex certification requirements.

1.4 INSTALLATION

To install the gear reducer it is necessary to note the following recommendations:

- Check the correct direction of rotation of the gear reducer output shaft before fitting the unit to the machine.
- In the case of particularly lengthy periods of storage (4/6 months), if the oil seal is not immersed in the lubricant inside the unit, it is recommended to change it since the rubber could stick to the shaft or may even have lost the elasticity it needs to function properly.
- Whenever possible, protect the gear reducer against solar radiation and bad weather.
- Ensure the motor cools correctly by ensuring good passage of air from the fan side.
- In the case of ambient temperatures < -5°C or > +40°C call the Technical Service.
- The various parts (pulleys, gear wheels, couplings, shafts, etc.) must be mounted on the shafts using special threaded holes or other systems that anyhow ensure correct operation without risking damage to the bearings or external parts of the units. Lubricate the surfaces in contact to avoid seizure or oxidation.
- Painting must definitely not go over rubber parts and the holes on the breather plugs, if any.
- For units equipped with oil plugs, replace the closed plug used for shipping with the special breather plug.
- Check the correct level of the lubricant through the indicator, if there is one.
- Starting must take place gradually, without immediately applying the maximum load.
- When there are parts, objects or materials under the motor drive that can be damaged by even limited spillage of oil, special protection should be fitted.

Assembling motor on pam flange

When the unit is supplied without motor, it is necessary to follow these recommendation to ensure the correct assembly of the electric motor. Check that the tolerances for the motor shaft and flange correspond to the “standard”. Carefully clean the shaft, spigot and surfaces of the flange removing traces of paint and dirt, and confirm the key is fitted correctly. Fit the half coupling/sleeve to the motor shaft (see picture) taking care to ensure the motor shaft and bearings are not damaged by avoiding excessive force and where necessary using assembly equipment. Place the couplings elastic element onto the motor half coupling and position the motor up to the gear unit ensuring the coupling element is aligned with the driven half coupling. Complete the assembly using the fixing bolts. Key-ways with tightened tolerances.

In case of Atex units, fit gasket (to be requested to Motovario) between PAM flange and motor.

Flexible joint

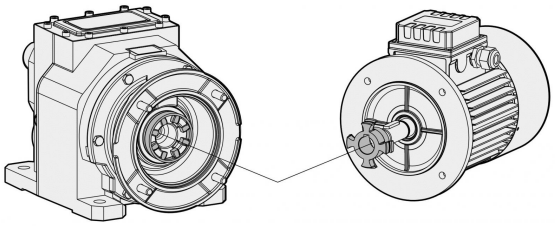

PAM Sleeve

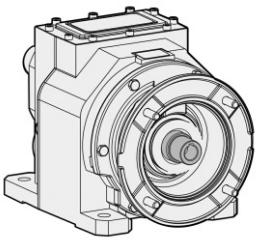

2.1 DESIGN FEATURES

Motovario products are supplied with the following surface treatment features:

Die-cast aluminium alloy cases for gears
Die-cast materials undergo the following surface cleaning operations:
- De-burring by means of a mechanically operated shearing system.
- Accurate shot-peening.
- Painting.
- Washing and passivation.

Grey-coloured cast-iron cases for gears
- Die-cast materials are always painted.

Painting specifications:
- Orange-peel blue epoxy-polyester RAL 5010. Polyester resin based heat-hardening powders, altered with epoxy resins.

Mechanical properties
- Tests carried out onto degreased Unichim white lattens (film thickness: 60 microns) comply with the following specifications: adherence (ISO2409).

Heat resistance
- 24 HOURS AT 150°C.

Corrosion strength
- ASTM B 117/97 salt fog from 100 to 500 hours depending on the support's preliminary treatment.

Performance:
- Loading capacity in accordance with DIN 3990, ISO 6336, AGMA 2101, ISO 10300, DIN 3991, ISO 281, DIN 743.

Dynamic η:
- The efficiency is the ratio between the output power P2 and the power absorbed by thegear reducer P_1: $\eta = P_2/P_1$.

H/HA-range helical gear reducers have an average value equal to:
H..1 stages = 0,97
H..2 stages = 0,96
H..3 stages = 0,94

2.2 TYPOLOGY

2.2.1 Designation

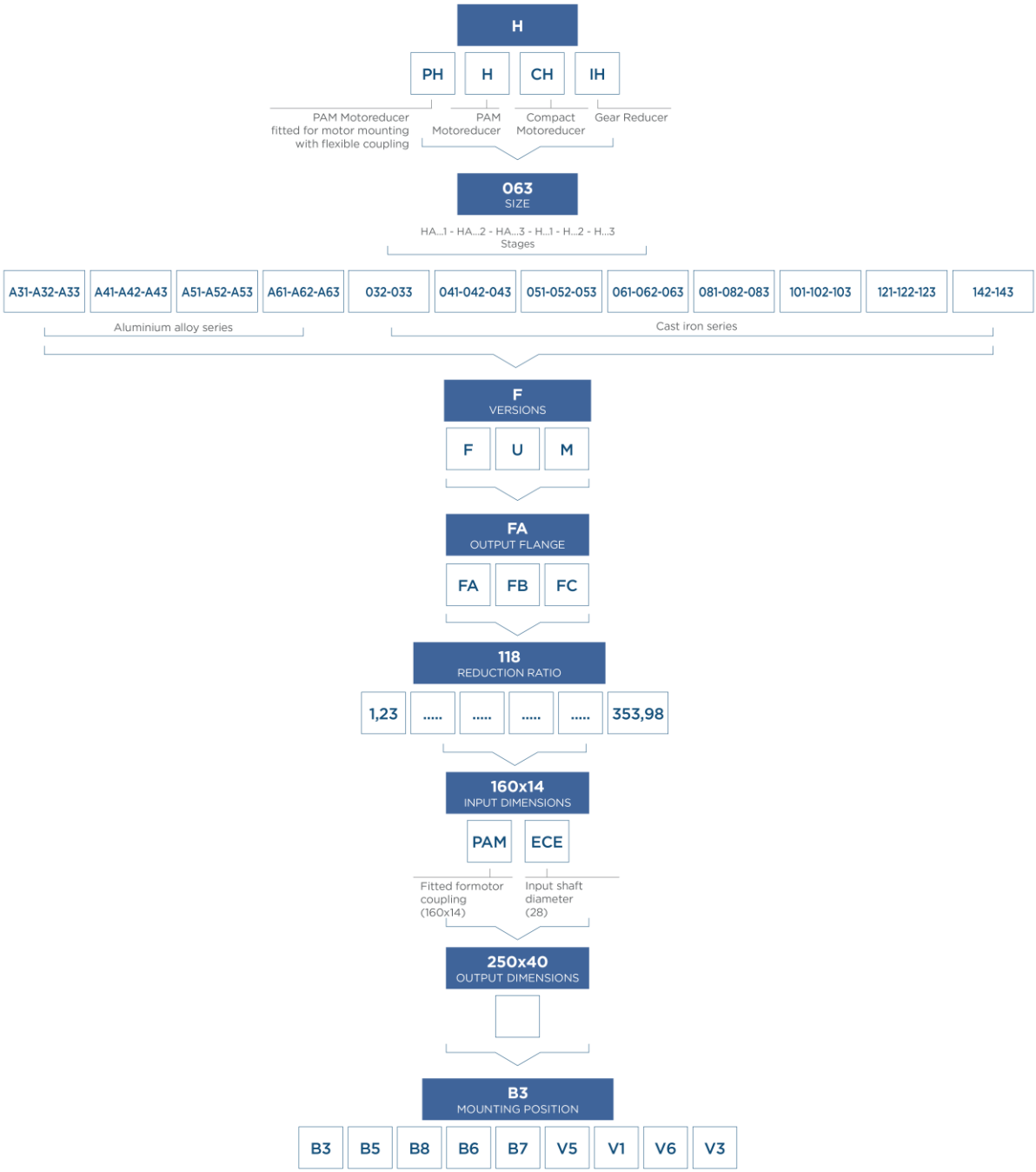

2.2.2 Versions

A30 - A40 - A50 - A60

SINGLE STAGE

CASING WITH FOOT

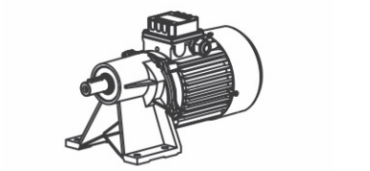

F CASING WITH FLANGE

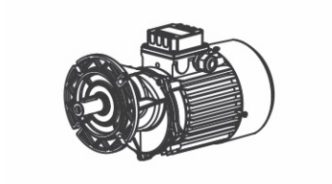

A31 CASING WITH FLANGE

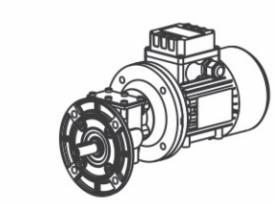

DOUBLE AND TRIPLE STAGE

CASING WITH FOOT

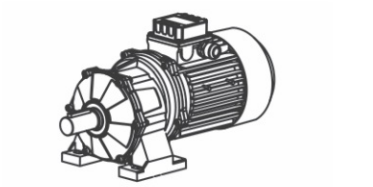

F CASING WITH FLANGE

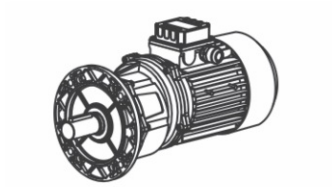

U CASING UNIVERSAL

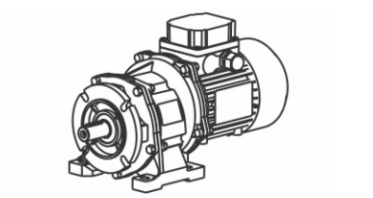

NOTE ATEX GEAR REDUCERS:
AVAILABLE FOR 3G/3D CERTIFICATION, ONLY.

2.2 TYPOLOGY

030 - 040 - 050 - 060 - 080 - 100 - 120 - 140

SINGLE STAGE

CASING WITH FOOT

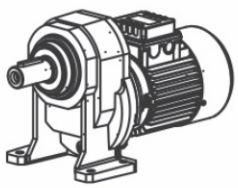

F CASING WITH FLANGE

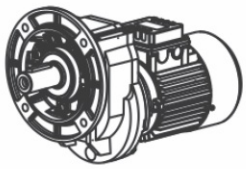

U CASING UNIVERSAL

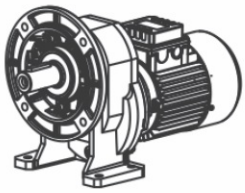

M CASING MONO

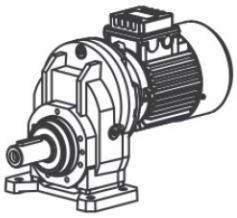

DOUBLE AND TRIPLE STAGE

CASING WITH FOOT

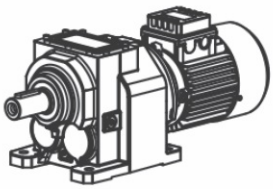

F CASING WITH FLANGE

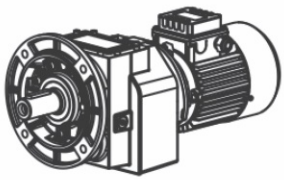

U CASING UNIVERSAL

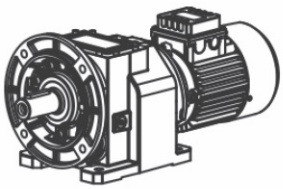

2.2.3 Modularity

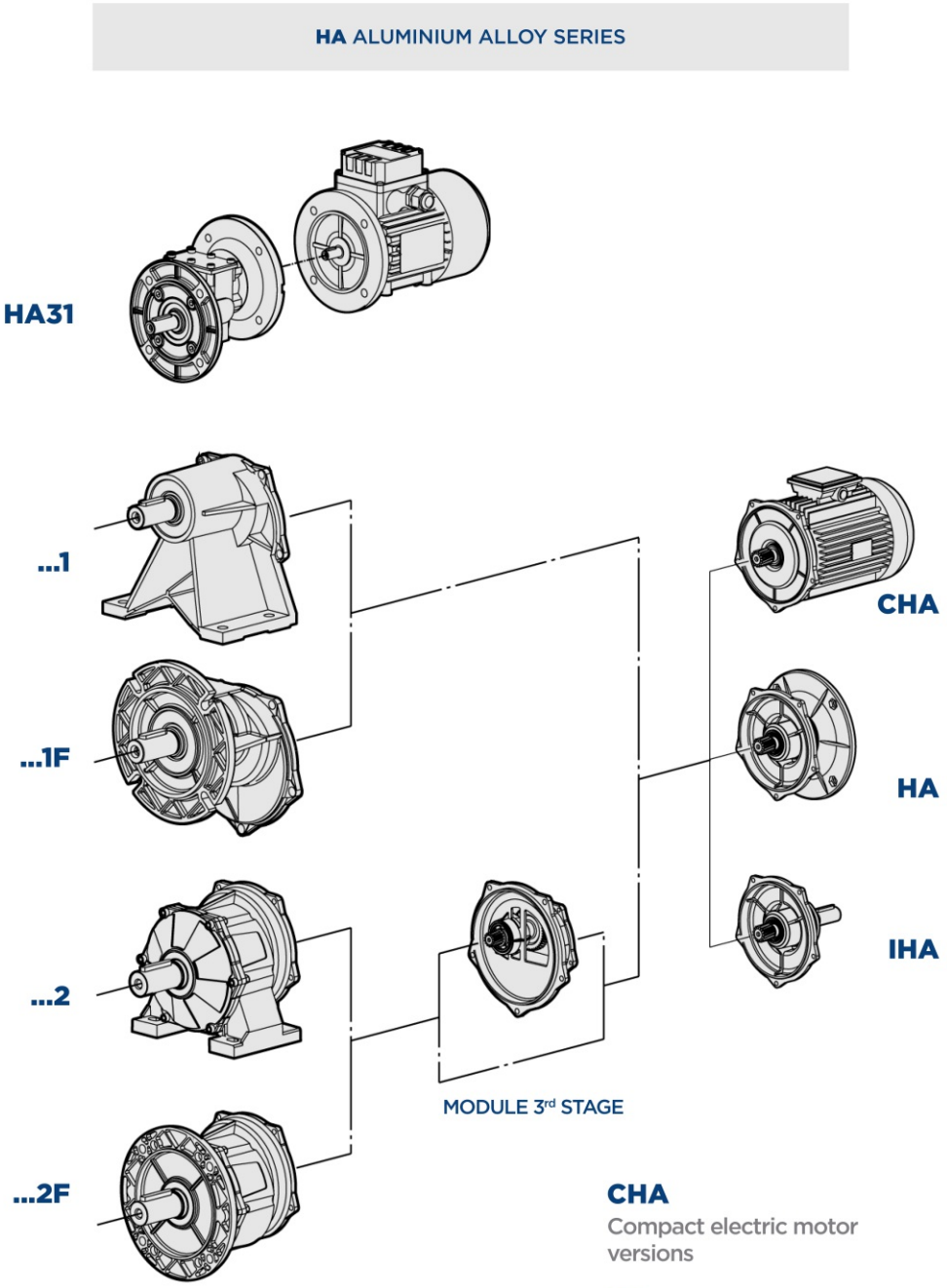

CHA
Compact electric motor versions

HA
Fitted for motor coupling version (PAM)

IHA
Input shaft versions

2.2 TYPOLOGY

H GREY CAST IRON SERIES

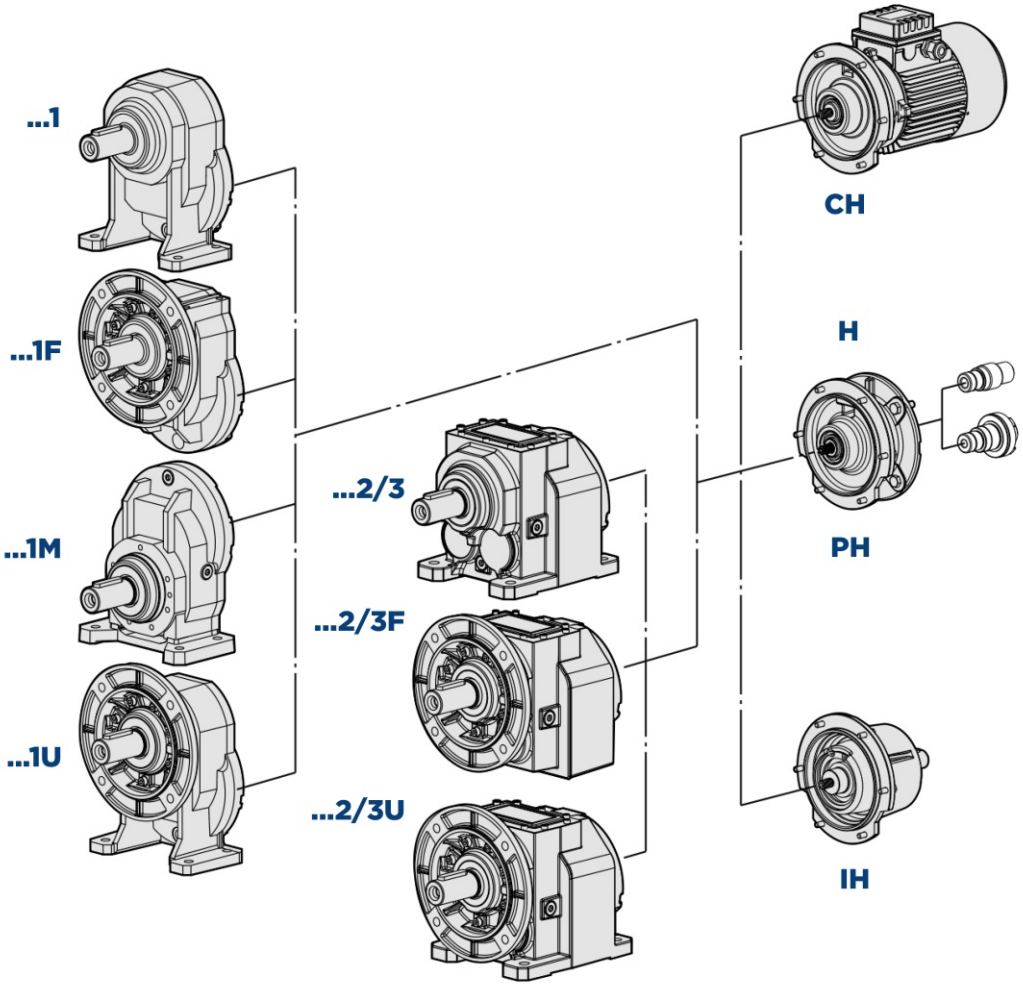

CH
Compact electric motor versions

H
Fitted for motor coupling version (PAM)

PH
Fitted for motor mounting with flexible coupling

IH
Input shaft versions

2.3 MOUNTING POSITIONS

2.3.1 Mounting positions

The mounting position of the gear unit identifies its space orientation. B3 mounting position, as from a technical point of view, ensures lower oil splash, better lubrication and less heating.

HA1T - H1T	HA1F - H1F
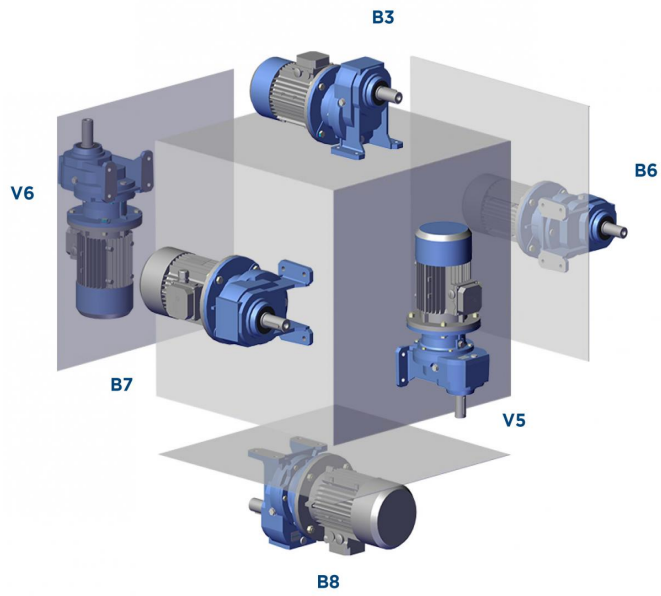	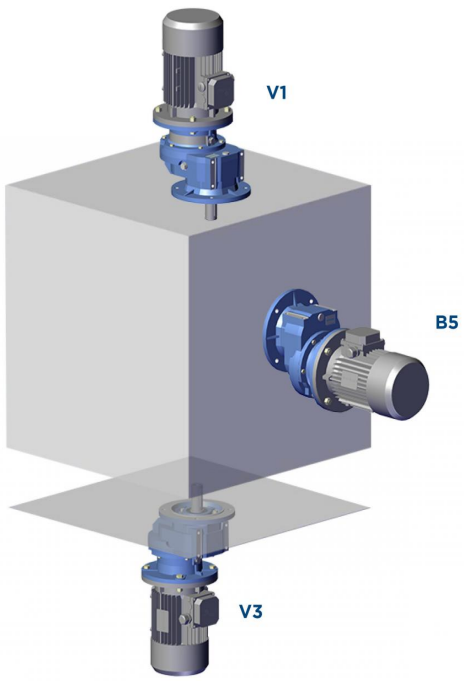
H1M	
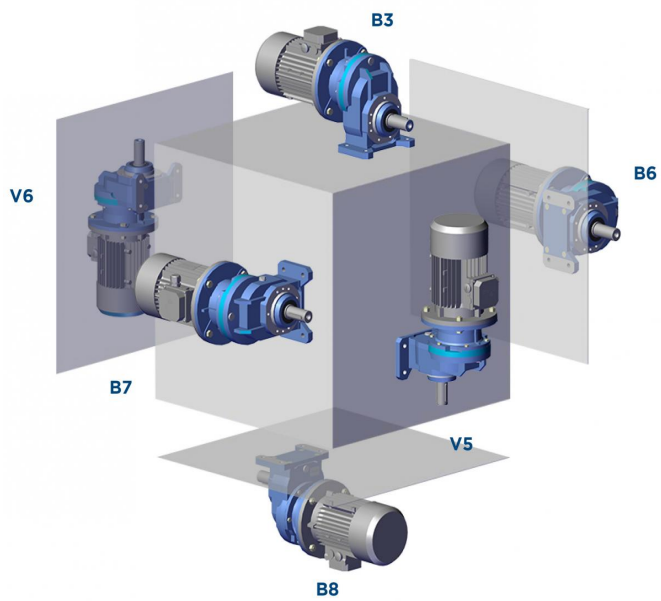	

2.3 MOUNTING POSITIONS

HA2/3T - H2/3T	HA2/3F - H2/3F
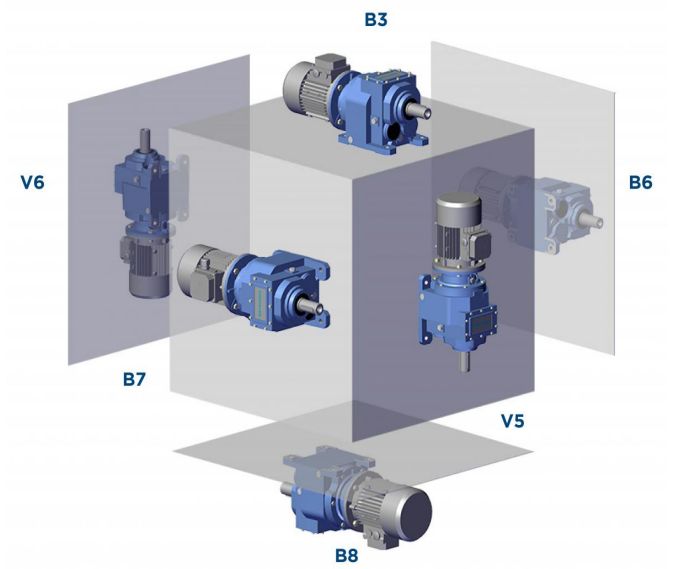	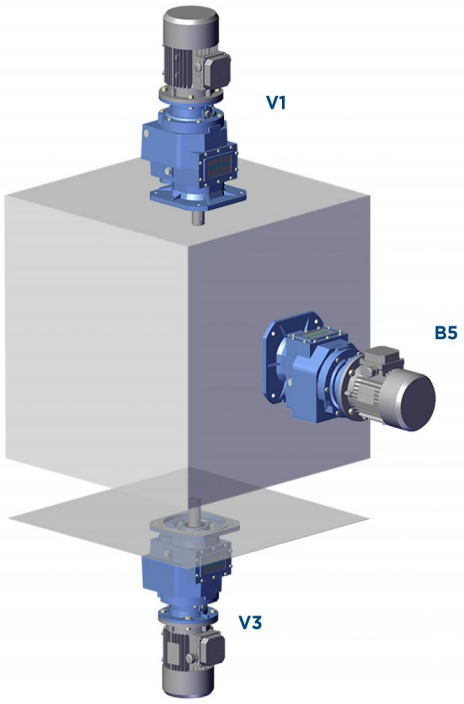

2.3.2 Position of terminal box

Unless otherwise specified when ordering, the gear reducer is supplied with terminal box in position 1.

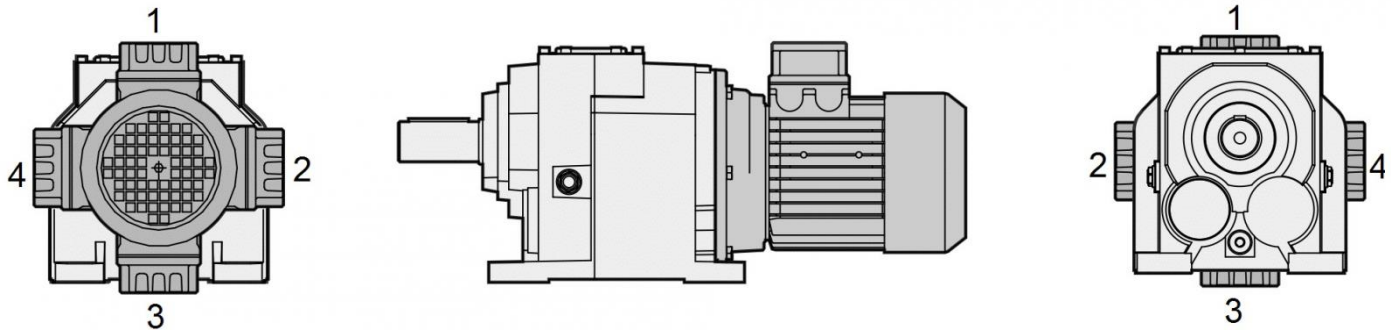

2.4 THERMAL POWER

2.4.1 Information

The scheme below indicates the nominal thermal power capacity Pth [kW] according to the following conditions:

- mounting position B3
- continuous operation at input speed <= 1,500 rpm
- environment temperature T_{amb}=25°C
- sea level altitude
- air speed around the gear reducer >=1m/s
- absence of external radial and/or axial loads

n_1 = 1500rpm					
	Pth [kW]		Pth [kW]		Pth [kW]
HA31	/	H041	6	H032	5
HA41	5	H051	8,5	H042	7
HA51	7	H061	13,5	H052	9
HA61	15	H081	27,2	H062	15,5
HA32	5	H101	51,5	H082	24
HA42	6,5	H121	67,5	H102	30
HA52	11			H122	36
HA62	15			H142	49

A correct lubrication and a proper running condition of the gearbox are guaranteed only applying an input power not exceeding Pth (at the above reference conditions)(T oil max=95°C).

NOTE: Normally, three stages gearboxes do not require thermal power verification because the thermal rating usually exceed the mechanical one.

2.4.2 Verification

Application check

Except for continuous operating times below two hours and successive pauses capable of bringing the gear reducer back to ambient temperature, for each application it is peremptory to verify the gear reducer's thermal limit according to the following formula: $\mathbf{P_1 < Pth * Fc * Fv * Fa}$, where:

- P_1 = input power to the gear reducer [kW]
- Pth = thermal power at the reference conditions [kW] (see above table)
- Fc = ambient and operating temperature correction factor
- Fv = ventilation correction factor
- Fa = altitude correction factor

The correction factors refer to different operating conditions compared to the reference conditions, and are provided by the following ISO14179 tables:

		Duty per hour of operation %				
	Fc	100	80	70	40	20
Ambient temperature °C	10	1,15	1,21	1,32	1,55	2,07
	18	1,07	1,12	1,23	1,44	1,93
	25	1,00	1,05	1,15	1,35	1,80
	30	0,93	0,98	1,07	1,26	1,67
	40	0,83	0,87	0,95	1,12	1,49
	43	0,75	0,79	0,86	1,01	1,35
	50	0,67	0,70	0,77	0,90	1,21

Altitude (m)	Fa
0*	1
750	0,95
1500	0,9
2250	0,85
3000	0,81

Ventilation correction factor	Fv
Stagnant air (<0,5 m/s)	0.75
Indoor installation with slight ventilation	1
Indoor installation with good ventilation (>1,4 m/s)	1.4
Installazione all'aperto (>3,7 m/s)	1.9

*Sea level

In case of operation at input speeds exceeding 2000 rpm, or ambient temperatures greater than 40°C, it is advisable to contact out technical department.

2.5 CRITICAL APPLICATIONS

2.5.1 Critical applications

H	A31	A30	A40	A50	A60
V5 - V1: 1500 < n1 < 3000	✔	✔	✔	✔	✔
n1 > 3000	B	B	B	B	B
V3 - V6	B	B	B	B	B

H	030	040	050	060	080	100	125	140
V5 - V1: 1500 < n1 < 3000	✔	✔	✔	✔	✔	✔	B	B
n1 > 3000	B	B	B	B	B	B	A	A
V3 - V6	B	B	B	B	B	B	B	B

✔ Verified application
A Application not recommended
B Check the application and/or call our technical service

2.5.2 Information

The performance given in the catalogue correspond to mounting position B3 or similar, when the first stage is not entirely immersed in oil. For other mounting positions and/or particular input speeds, refer to the tables that highlight different critical situations for each size of gear reducer. It is also necessary to take due consideration of and carefully assess the following applications by calling our Technical Service:

- To avoid the use as multiplier.
- Use in services that could be hazardous for people if the gear reducer fails.
- Applications with especially high inertia.
- Use as a lifting winch.
- Applications with high dynamic strain on the case of the gear reducer.
- In places with T_{amb} under -5°C or over 40°C.
- Use in chemically aggressive environments.
- Use in a salty environment.
- Mounting positions not envisaged in the catalogue.
- Use in radioactive environments.
- Use in environments pressures other than atmospheric pressure.

Avoid applications where even partial immersion of the reducer is required.
In the presence of overloading due to full load, braking, shocks or other static and dynamic causes, please verify that the peak torque is less than $2*Mn_2$.

2.6 MOTOR FLANGE AVAILABILITY

2.6.1 HA Motor flange availability

B10 = Compact electric motor versions.

These tables report all possible dimensions. Please verify service factor.

NOTE Atex gear reducers: available for 3G/3D certification, only.

	i	063	071	080	090	100	112
CH A32	5,38 ÷ 30,55	B10	B10	B10			
CH A32	35,44 ÷ 60,67	B10	B10				
CH A33	51,32 ÷ 166,61	B10	B10				
CH A33	193,3 ÷ 347,29	B10	B10	B10			
CH A41	1,45 ÷ 5,45	B10	B10	B10			
CH A41	7,88 ÷ 10,83	B10	B10				
CH A42	5,38 ÷ 30,55	B10	B10	B10	B10		
CH A42	35,44 ÷ 60,67	B10	B10				
CH A43	51,32 ÷ 166,61	B10	B10	B10	B10		
CH A43	193,3 ÷ 347,29	B10	B10				
CH A51	1,45 ÷ 5,45	B10	B10	B10	B10		
CH A51	7,88 ÷ 10,83	B10	B10				
CH A52	5,14 ÷ 25,43			B10	B10	B10	B10
CH A52	29,89 ÷ 61,87			B10	B10		
CH A53	49,8 ÷ 163,05	B10	B10	B10	B10		
CH A53	200,27 ÷ 353,98	B10	B10				
CH A61	1,33 ÷ 4,38			B10	B10	B10	B10
CH A61	7,75 ÷ 10,67			B10	B10		
CH A62	5,14 ÷ 25,43			B10	B10	B10	B10
CH A62	29,89 ÷ 61,87			B10	B10		
CH A63	49,8 ÷ 163,05	B10	B10	B10	B10		
CH A63	200,27 ÷ 353,98	B10	B10				

	i	063	071	080	090	100	112
H A31	2,55 ÷ 4,75	B5	B5	B5			
H A31	5,1 ÷ 7,88	B5	B5				
H A31	10,83	B5					
H A32	5,38 ÷ 30,55	B5	B5-B14	B5-B14			
H A32	35,44 ÷ 60,67	B5	B5-B14				
H A33	51,32 ÷ 166,61	B5	B5-B14				
H A33	193,3 ÷ 347,29	B5	B5-B14	B5-B14			
H A41	1,45 ÷ 5,45	B5	B5-B14	B5-B14			
H A41	7,88 ÷ 10,83	B5	B5-B14				
H A42	5,38 ÷ 30,55	B5	B5-B14	B5-B14	B5-B14		
H A42	35,44 ÷ 60,67	B5	B5-B14				
H A43	51,32 ÷ 166,61	B5	B5-B14	B5-B14	B5-B14		
H A43	193,3 ÷ 347,29	B5	B5-B14				
H A51	1,45 ÷ 5,45	B5	B5-B14	B5-B14	B5-B14		
H A51	7,88 ÷ 10,83	B5	B5-B14				
H A52	5,14 ÷ 25,43			B5-B14	B5-B14	B5-B14	B5-B14
H A52	29,89 ÷ 61,87			B5-B14	B5-B14		
H A53	49,8 ÷ 163,05	B5	B5-B14	B5-B14	B5-B14		
H A53	200,27 ÷ 353,98	B5	B5-B14				
H A61	1,33 ÷ 4,38			B5-B14	B5-B14	B5-B14	B5-B14
H A61	7,75 ÷ 10,67			B5-B14	B5-B14		
H A62	5,14 ÷ 25,43			B5-B14	B5-B14	B5-B14	B5-B14
H A62	29,89 ÷ 61,87			B5-B14	B5-B14		
H A63	49,8 ÷ 163,05	B5	B5-B14	B5-B14	B5-B14		
H A63	200,27 ÷ 353,98	B5	B5-B14				

2.6.2 H Motor flange availability

B11 = Compact electric motor versions.
These tables report all possible dimensions. Please verify service factor.
*For motor size 063 the PB version does not exist.

NOTE Atex geared motors (versions with compact electric motor B11): available for 3G/3D certification, only.

CH - H - PH 032					
i	071	080	090	100	112
4,70	B5-B11	B5-B11	B5-B11	B5-B11	B5-B11
6,23	B5-B11	B5-B11	B5-B11	B5-B11	B5-B11
7,76	B5-B11	B5-B11	B5-B11	B5-B11	B5-B11
8,87	B5-B11	B5-B11	B5-B11	B5-B11	B5-B11
10,14	B5-B11	B5-B11	B5-B11	B5-B11	B5-B11
11,76	B5-B11	B5-B11	B5-B11	B5-B11	B5-B11
13,72	B5-B11	B5-B11	B5-B11	B5-B11	B5-B11
14,66	B5-B11	B5-B11	B5-B11	B5-B11	B5-B11
16,77	B5-B11	B5-B11	B5-B11	B5-B11	B5-B11
18,20	B5-B11	B5-B11	B5-B11	B5-B11	B5-B11
19,90	B5-B11	B5-B11	B5-B11		
22,68	B5-B11	B5-B11	B5-B11	B5-B11	B5-B11
23,83	B5-B11	B5-B11	B5-B11		
26,39	B5-B11	B5-B11	B5-B11		
29,70	B5-B11	B5-B11	B5-B11		
32,89	B5-B11	B5-B11	B5-B11		
37,92	B5-B11	B5-B11	B5-B11		
41,40	B5-B11	B5-B11	B5-B11		
47,25	B5-B11	B5-B11	B5-B11		

CH - H - PH 033				
i	*063	071	080	090
53,59	B5-B11	B5-B11	B5-B11	B5-B11
66,78	B5-B11	B5-B11	B5-B11	B5-B11
74,84	B5-B11	B5-B11	B5-B11	B5-B11
99,27	B5-B11	B5-B11	B5-B11	B5-B11
108,05	B5-B11	B5-B11		
123,71	B5-B11	B5-B11	B5-B11	B5-B11
143,33	B5-B11	B5-B11		
178,61	B5-B11	B5-B11		
197,17	B5-B11	B5-B11		
245,70	B5-B11	B5-B11		

CH - H - PH 041			
i	071	080	090
1,44	B5-B11	B5-B11	B5-B11
2,00	B5-B11	B5-B11	B5-B11
2,55	B5-B11	B5-B11	B5-B11
2,71	B5-B11	B5-B11	B5-B11
3,11	B5-B11	B5-B11	B5-B11
3,59	B5-B11	B5-B11	B5-B11
4,20	B5-B11	B5-B11	B5-B11
5,00	B5-B11	B5-B11	B5-B11
5,50	B5-B11	B5-B11	B5-B11
6,09	B5-B11	B5-B11	B5-B11
7,67	B5-B11	B5-B11	B5-B11
8,75	B5-B11	B5-B11	B5-B11

CH - H - PH 042					
i	071	080	090	100	112
5,46	B5-B11	B5-B11	B5-B11	B5-B11	B5-B11
7,19	B5-B11	B5-B11	B5-B11	B5-B11	B5-B11
8,91	B5-B11	B5-B11	B5-B11	B5-B11	B5-B11
10,31	B5-B11	B5-B11	B5-B11	B5-B11	B5-B11
11,80	B5-B11	B5-B11	B5-B11	B5-B11	B5-B11
13,57	B5-B11	B5-B11	B5-B11	B5-B11	B5-B11
15,96	B5-B11	B5-B11	B5-B11	B5-B11	B5-B11
19,00	B5-B11	B5-B11	B5-B11	B5-B11	B5-B11
21,00	B5-B11	B5-B11	B5-B11	B5-B11	B5-B11
23,15	B5-B11	B5-B11	B5-B11		
26,04	B5-B11	B5-B11	B5-B11	B5-B11	B5-B11
27,50	B5-B11	B5-B11	B5-B11		
30,45	B5-B11	B5-B11	B5-B11		
34,10	B5-B11	B5-B11	B5-B11		
37,76	B5-B11	B5-B11	B5-B11		
43,75	B5-B11	B5-B11	B5-B11		
47,53	B5-B11	B5-B11	B5-B11		
54,25	B5-B11	B5-B11	B5-B11		

CH - H - PH 043				
i	*063	071	080	090
61,83	B5-B11	B5-B11	B5-B11	B5-B11
76,67	B5-B11	B5-B11	B5-B11	B5-B11
87,05	B5-B11	B5-B11	B5-B11	B5-B11
114,55	B5-B11	B5-B11	B5-B11	B5-B11
125,69	B5-B11	B5-B11		
142,04	B5-B11	B5-B11	B5-B11	B5-B11
165,38	B5-B11	B5-B11		
205,07	B5-B11	B5-B11		
227,50	B5-B11	B5-B11		
282,10	B5-B11	B5-B11		

2.6 MOTOR FLANGE AVAILABILITY

CH - H - PH 051					
i	071	080	090	100	112
1,27		B5-B11	B5-B11	B5-B11	B5-B11
1,42		B5-B11	B5-B11	B5-B11	B5-B11
2,13		B5-B11	B5-B11	B5-B11	B5-B11
2,57	B5-B11	B5-B11	B5-B11	B5-B11	B5-B11
3,17	B5-B11	B5-B11	B5-B11	B5-B11	B5-B11
3,69	B5-B11	B5-B11	B5-B11	B5-B11	B5-B11
4,00	B5-B11	B5-B11	B5-B11	B5-B11	B5-B11
4,77	B5-B11	B5-B11	B5-B11	B5-B11	B5-B11
5,25	B5-B11	B5-B11	B5-B11	B5-B11	B5-B11
5,82	B5-B11	B5-B11	B5-B11	B5-B11	B5-B11
7,33	B5-B11	B5-B11	B5-B11		
8,38	B5-B11	B5-B11	B5-B11		

CH - H - PH 052					
i	071	080	090	100	112
5,73		B5-B11	B5-B11	B5-B11	B5-B11
6,89		B5-B11	B5-B11	B5-B11	B5-B11
8,53		B5-B11	B5-B11	B5-B11	B5-B11
9,56		B5-B11	B5-B11	B5-B11	B5-B11
11,51		B5-B11	B5-B11	B5-B11	B5-B11
14,24		B5-B11	B5-B11	B5-B11	B5-B11
16,59	B5-B11	B5-B11	B5-B11	B5-B11	B5-B11
18,00	B5-B11	B5-B11	B5-B11	B5-B11	B5-B11
19,97	B5-B11	B5-B11	B5-B11	B5-B11	B5-B11
21,67	B5-B11	B5-B11	B5-B11	B5-B11	B5-B11
24,71	B5-B11	B5-B11	B5-B11	B5-B11	B5-B11
26,18	B5-B11	B5-B11	B5-B11	B5-B11	B5-B11
28,44	B5-B11	B5-B11	B5-B11	B5-B11	B5-B11
31,52	B5-B11	B5-B11	B5-B11	B5-B11	B5-B11
33,00	B5-B11	B5-B11	B5-B11		
38,98	B5-B11	B5-B11	B5-B11	B5-B11	B5-B11
45,36	B5-B11	B5-B11	B5-B11		
49,13	B5-B11	B5-B11	B5-B11		
56,11	B5-B11	B5-B11	B5-B11		

CH - H - PH 053				
i	*063	071	080	090
58,81	B5-B11	B5-B11	B5-B11	B5-B11
72,75	B5-B11	B5-B11	B5-B11	B5-B11
90,51	B5-B11	B5-B11	B5-B11	B5-B11
108,95	B5-B11	B5-B11	B5-B11	B5-B11
134,76	B5-B11	B5-B11	B5-B11	B5-B11
157,29	B5-B11	B5-B11		
194,56	B5-B11	B5-B11		
216,38	B5-B11	B5-B11		
267,65	B5-B11	B5-B11		

CH - H - PH 061				
i	080	090	100	112
1,34	B5-B11	B5-B11	B5-B11	B5-B11
2,13	B5-B11	B5-B11	B5-B11	B5-B11
2,57	B5-B11	B5-B11	B5-B11	B5-B11
3,17	B5-B11	B5-B11	B5-B11	B5-B11
3,69	B5-B11	B5-B11	B5-B11	B5-B11
4,00	B5-B11	B5-B11	B5-B11	B5-B11
4,77	B5-B11	B5-B11	B5-B11	B5-B11
5,25	B5-B11	B5-B11	B5-B11	B5-B11
5,82	B5-B11	B5-B11	B5-B11	B5-B11
7,33	B5-B11	B5-B11	B5-B11	B5-B11
8,38	B5-B11	B5-B11	B5-B11	B5-B11

CH - H - PH 062					
i	080	090	100	112	132
5,38	B5-B11	B5-B11	B5-B11	B5-B11	B5-B11
5,93	B5-B11	B5-B11	B5-B11	B5-B11	B5-B11
7,39	B5-B11	B5-B11	B5-B11	B5-B11	B5-B11
8,50	B5-B11	B5-B11	B5-B11	B5-B11	B5-B11
9,39	B5-B11	B5-B11	B5-B11	B5-B11	B5-B11
11,69	B5-B11	B5-B11	B5-B11	B5-B11	B5-B11
12,67	B5-B11	B5-B11	B5-B11	B5-B11	B5-B11
14,75	B5-B11	B5-B11	B5-B11	B5-B11	B5-B11
16,29	B5-B11	B5-B11	B5-B11	B5-B11	B5-B11
17,67	B5-B11	B5-B11	B5-B11	B5-B11	B5-B11
20,28	B5-B11	B5-B11	B5-B11	B5-B11	B5-B11
23,27	B5-B11	B5-B11	B5-B11	B5-B11	B5-B11
25,70	B5-B11	B5-B11	B5-B11	B5-B11	B5-B11
29,33	B5-B11	B5-B11	B5-B11	B5-B11	
32,00	B5-B11	B5-B11	B5-B11	B5-B11	B5-B11
36,99	B5-B11	B5-B11	B5-B11	B5-B11	
40,33	B5-B11	B5-B11	B5-B11	B5-B11	
46,06	B5-B11	B5-B11	B5-B11	B5-B11	

CH - H - PH 063					
i	071	080	090	100	112
49,45		B5-B11	B5-B11	B5-B11	B5-B11
54,61		B5-B11	B5-B11	B5-B11	B5-B11
68,00		B5-B11	B5-B11	B5-B11	B5-B11
85,82	B5-B11	B5-B11	B5-B11	B5-B11	B5-B11
94,76	B5-B11	B5-B11	B5-B11	B5-B11	B5-B11
118,00	B5-B11	B5-B11	B5-B11	B5-B11	B5-B11
135,40	B5-B11	B5-B11	B5-B11	B5-B11	B5-B11
149,51	B5-B11	B5-B11	B5-B11	B5-B11	B5-B11
170,67	B5-B11	B5-B11	B5-B11		
186,18	B5-B11	B5-B11	B5-B11	B5-B11	B5-B11
215,21	B5-B11	B5-B11	B5-B11		
234,67	B5-B11	B5-B11	B5-B11		
268,00	B5-B11	B5-B11	B5-B11		

2.6 MOTOR FLANGE AVAILABILITY

CH - H - PH 081					
i	080	090	100	112	132
1,30					B5-B11
1,43					B5-B11
1,93					B5-B11
2,54			B5-B11	B5-B11	B5-B11
3,25			B5-B11	B5-B11	B5-B11
3,72			B5-B11	B5-B11	B5-B11
4,00			B5-B11	B5-B11	B5-B11
4,67			B5-B11	B5-B11	B5-B11
5,54	B5-B11	B5-B11	B5-B11	B5-B11	B5-B11
6,08	B5-B11	B5-B11	B5-B11	B5-B11	B5-B11
7,50	B5-B11	B5-B11	B5-B11	B5-B11	B5-B11
8,44	B5-B11	B5-B11	B5-B11	B5-B11	B5-B11

CH - H - PH 082						
i	080	090	100	112	132	160
5,39					B5-B11	B5
5,95					B5-B11	B5
7,39					B5-B11	B5
8,02					B5-B11	B5
8,85					B5-B11	B5
11,01					B5-B11	B5
13,50			B5-B11	B5-B11	B5-B11	B5
14,90			B5-B11	B5-B11	B5-B11	B5
16,60			B5-B11	B5-B11	B5-B11	B5
18,53			B5-B11	B5-B11	B5-B11	B5
19,38			B5-B11	B5-B11	B5-B11	B5
21,39			B5-B11	B5-B11	B5-B11	B5
22,80			B5-B11	B5-B11	B5-B11	B5
26,60			B5-B11	B5-B11	B5-B11	B5
27,88	B5-B11	B5-B11	B5-B11	B5-B11	B5-B11	
31,15	B5-B11	B5-B11	B5-B11	B5-B11	B5-B11	
34,38	B5-B11	B5-B11	B5-B11	B5-B11	B5-B11	
38,70	B5-B11	B5-B11	B5-B11	B5-B11	B5-B11	
42,75	B5-B11	B5-B11	B5-B11	B5-B11	B5-B11	
48,13	B5-B11	B5-B11	B5-B11	B5-B11	B5-B11	

CH - H - PH 083					
i	080	090	100	112	132
56,53	B5-B11	B5-B11	B5-B11	B5-B11	B5-B11
71,48	B5-B11	B5-B11	B5-B11	B5-B11	B5-B11
78,87	B5-B11	B5-B11	B5-B11	B5-B11	B5-B11
85,60	B5-B11	B5-B11	B5-B11	B5-B11	B5-B11
98,09	B5-B11	B5-B11	B5-B11	B5-B11	B5-B11
112,78	B5-B11	B5-B11	B5-B11	B5-B11	B5-B11
124,44	B5-B11	B5-B11	B5-B11	B5-B11	B5-B11
142,15	B5-B11	B5-B11	B5-B11	B5-B11	
154,76	B5-B11	B5-B11	B5-B11	B5-B11	B5-B11
162,35	B5-B11	B5-B11			
179,13	B5-B11	B5-B11			
195,07	B5-B11	B5-B11			
222,78	B5-B11	B5-B11			

CH - H - PH 101					
i	100	112	132	160	180
1,29			B5-B11	B5	B5
1,41			B5-B11	B5	B5
2,03			B5-B11	B5	B5
2,48			B5-B11	B5	B5
3,27	B5-B11	B5-B11	B5-B11	B5	B5
3,70	B5-B11	B5-B11	B5-B11	B5	B5
4,22			B5-B11	B5	B5
4,88	B5-B11	B5-B11	B5-B11	B5	B5
5,27	B5-B11	B5-B11	B5-B11	B5	B5
6,23	B5-B11	B5-B11	B5-B11	B5	
7,55	B5-B11	B5-B11	B5-B11	B5	
8,40	B5-B11	B5-B11	B5-B11	B5	

CH - H - PH 102					
i	100	112	132	160	180
5,26			B5-B11	B5	B5
6,36			B5-B11	B5	B5
7,05			B5-B11	B5	B5
8,27			B5-B11	B5	B5
9,99			B5-B11	B5	B5
11,09			B5-B11	B5	B5
13,32	B5-B11	B5-B11	B5-B11	B5	B5
16,09	B5-B11	B5-B11	B5-B11	B5	B5
17,85	B5-B11	B5-B11	B5-B11	B5	B5
19,80	B5-B11	B5-B11	B5-B11	B5	B5
21,44	B5-B11	B5-B11	B5-B11	B5	B5
24,00	B5-B11	B5-B11	B5-B11	B5	B5
25,89	B5-B11	B5-B11	B5-B11	B5	B5
28,73	B5-B11	B5-B11	B5-B11	B5	B5
30,70	B5-B11	B5-B11	B5-B11	B5	
34,20	B5-B11	B5-B11	B5-B11	B5	
38,45	B5-B11	B5-B11	B5-B11		
41,30	B5-B11	B5-B11	B5-B11	B5	
45,82	B5-B11	B5-B11	B5-B11	B5	
51,52	B5-B11	B5-B11	B5-B11		

CH - H - PH 103					
i	090	100	112	132	160
55,47				B5-B11	B5
69,69		B5-B11	B5-B11	B5-B11	B5
79,80		B5-B11	B5-B11	B5-B11	B5
84,16		B5-B11	B5-B11	B5-B11	B5
93,36		B5-B11	B5-B11	B5-B11	B5
100,07		B5-B11	B5-B11	B5-B11	B5
120,84		B5-B11	B5-B11	B5-B11	B5
134,06		B5-B11	B5-B11	B5-B11	B5
143,40	B5-B11	B5-B11	B5-B11	B5-B11	
160,82	B5-B11	B5-B11	B5-B11	B5-B11	
181,07	B5-B11	B5-B11	B5-B11	B5-B11	
194,21	B5-B11	B5-B11	B5-B11	B5-B11	
215,45	B5-B11	B5-B11	B5-B11	B5-B11	
242,59	B5-B11	B5-B11	B5-B11	B5-B11	

2.6 MOTOR FLANGE AVAILABILITY

CH - H - PH 121				
i	132	160	180	200
1,23		B5	B5	B5
1,42		B5	B5	B5
1,81		B5	B5	B5
2,00	B5-B11	B5	B5	B5
2,48	B5-B11	B5	B5	B5
2,95	B5-B11	B5	B5	B5
3,14	B5-B11	B5	B5	B5
3,58	B5-B11	B5	B5	B5
4,12	B5-B11	B5	B5	B5
4,80	B5-B11	B5	B5	B5
5,21	B5-B11	B5	B5	
6,25	B5-B11	B5	B5	
7,70	B5-B11	B5	B5	

CH - H - PH 122				
i	132	160	180	200
5,27		B5	B5	B5
5,78		B5	B5	B5
7,05		B5	B5	B5
7,74		B5	B5	B5
8,48		B5	B5	B5
10,35		B5	B5	B5
12,66	B5-B11	B5	B5	B5
13,86	B5-B11	B5	B5	B5
16,92	B5-B11	B5	B5	B5
19,30	B5-B11	B5	B5	B5
20,57	B5-B11	B5	B5	B5
22,52	B5-B11	B5	B5	B5
24,47	B5-B11	B5	B5	
27,49	B5-B11	B5	B5	B5
29,86	B5-B11	B5	B5	
33,00	B5-B11	B5	B5	
36,13	B5-B11	B5	B5	
44,10	B5-B11	B5	B5	

CH - H - PH 123						
i	100	112	132	160	180	200
45,77			B5-B11	B5	B5	B5
55,87			B5-B11	B5	B5	B5
67,32	B5-B11	B5-B11	B5-B11	B5	B5	B5
73,71	B5-B11	B5-B11	B5-B11	B5	B5	B5
83,30	B5-B11	B5-B11	B5-B11	B5	B5	B5
89,97	B5-B11	B5-B11	B5-B11	B5	B5	B5
100,30	B5-B11	B5-B11	B5-B11	B5	B5	B5
108,34	B5-B11	B5-B11	B5-B11	B5	B5	B5
118,62	B5-B11	B5-B11	B5-B11	B5	B5	B5
128,18	B5-B11	B5-B11	B5-B11	B5	B5	
144,79	B5-B11	B5-B11	B5-B11	B5	B5	B5
155,22	B5-B11	B5-B11	B5-B11	B5	B5	
172,80	B5-B11	B5-B11	B5-B11	B5	B5	
189,19	B5-B11	B5-B11	B5-B11	B5	B5	
207,40	B5-B11	B5-B11	B5-B11	B5	B5	
230,92	B5-B11	B5-B11	B5-B11	B5	B5	
259,60	B5-B11	B5-B11	B5-B11			

CH - H - PH 142				
i	160	180	200	225
5,27	B5	B5	B5	B5
6,36	B5	B5	B5	B5
7,04	B5	B5	B5	B5
7,84	B5	B5	B5	B5
9,45	B5	B5	B5	B5
10,47	B5	B5	B5	B5
13,07	B5	B5	B5	B5
15,75	B5	B5	B5	B5
17,45	B5	B5	B5	B5
20,04	B5	B5	B5	B5
24,15	B5	B5	B5	B5
26,76	B5	B5	B5	B5
32,24	B5	B5	B5	B5
38,85	B5	B5	B5	B5
43,05	B5	B5	B5	B5

CH - H - PH 143				
i	132	160	180	200
48,35		B5	B5	B5
53,50	B5	B5	B5	B5
59,22	B5	B5	B5	B5
63,00	B5	B5	B5	B5
71,35	B5	B5	B5	B5
79,07	B5	B5	B5	B5
86,40	B5	B5	B5	B5
96,21	B5	B5	B5	B5
104,51	B5	B5	B5	
115,92	B5	B5	B5	B5
128,47	B5	B5	B5	B5
139,55	B5	B5	B5	
154,33	B5	B5	B5	
185,96	B5	B5	B5	
206,08	B5	B5	B5	

2.7 OUTPUT SHAFT BEARINGS

	HA30	HA40	HA50	HA60
	Standard	Standard	Standard	Standard
HA 1	1	1	1	1
HA 2/3	1	1	1	1

	H030	H040	H050	H060	H080	H100	H125	H140
	Standard	Standard	Standard	Standard	Standard	Standard	Standard	Standard
H 1/M	/	1	1	1	1	1	1	/
H 2/3	2	2	2	2	2	2	2	2

1 - Ball Bearing

2 - Roller bearings

/ - Not available

2.8 OVERHUNG LOAD

2.8.1 Information

The value of the admissible radial load [N] is given in the tables relating to the performance of the gear reducer at issue. It is related to the load applied on the centre line of the shaft and in the most unfavourable conditions of angle of application and direction of rotation. The maximum admissible axial loads are 1/5 of the value of the given radial load when they are applied in combination with the radial load. The tables relating to the output shafts give the maximum admissible value. This value must never be exceeded since it relates to the strength of the case. Particular conditions of radial load higher than the limits of the catalogue may occur. In this case, call our Technical Sevice and provide details on the application: direction of the load, direction of rotation of the shaft, type of service. The radial load on the shaft is calculated with the following formula: **Fre=(2000*M*fz)/D≤Fr1 or Fr2**

- **Fre** [N] Resulting radial load
- **M** [Nm] Torque on the shaft
- **D** [mm] Diameter of the transmission member mounted on the shaft
- **Fr1**-**Fr2** [N] Value of the maximum admitted radial load (see relative tables)
- **fz** = 1,1 gear pinion - 1,4 chain wheel - 1,7 v-pulley - 2,5 flat pulley

2.8.2 Input

When the radial load is not on the centre line of the shaft, it is necessary to adjust the admissible radial load Fr1 with the following formula: **Frx=(Fr1*a)/(b+x)**

- **a** , **b** = values given in the tables
- **x** = distance from the point of application of the load to the shaft shoulder

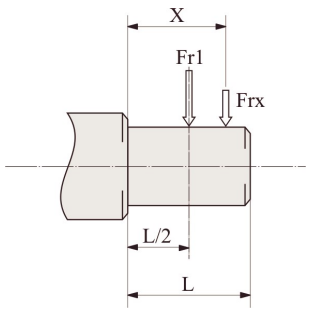

IH	A32/A33/A41/A42/A43/A51/A53/A63	A52/A61/A62
a	84	89
b	64	69
Fr1 max(**)	480	800

IH	041	051	061	081	101	121
a	105	105	105	137	175	175
b	80	80	80	108	135	135
Fr1 max(**)	1320	1800	2200	2500	3000	3000

IH	032/033	042/043	052/053	062/063	082/083	102/103	122 123	142/143
a	105	105	105	137	137	175	175	225
b	80	80	80	108	108	135	135	170
Fr1 max(**)	2200	2200	2500	3600	3600	7200	7200	15000

(**Fr1 max) Max admissible value of the reducer in static conditions and/or for limited operations. For continuous overhung loads please check the values on the performances tables calculated according to the casing, the shaft and bearings.

2.8.3 Output

When the radial load is not on the centre line of the shaft, it is necessary to adjust the admissible radial load Fr2 with the following formula: **Frx=(Fr2*a)/(b+x)**

- **a** , **b** = values given in the tables
- **x** = distance from the point of application of the load to the shaft shoulder

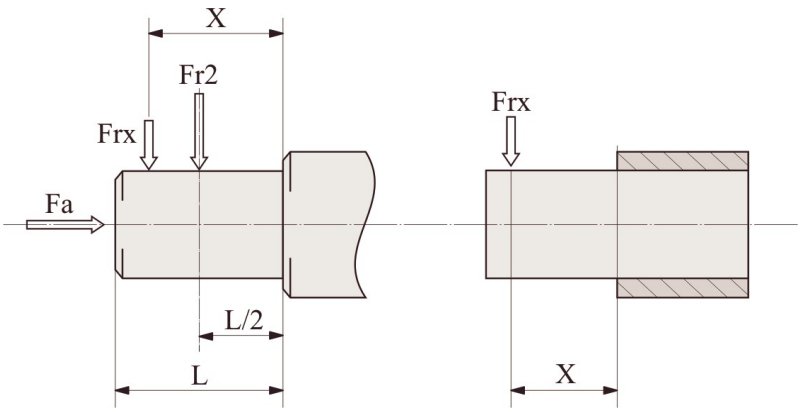

H	A31	A41	A51	A61	A32/A33	A42/A43	A52/A53	A62/A63
a	78,5	81	83	103	105	115	135	155
b	58,5	61	58	73	85	90	105	115
Fr2 max(**)	1100	1100	3000	4500	2000	4300	6000	8000

H	041	051	061	081	101	121
a	89	98	115	151	210	232
b	79	73	85	111	155	177
Fr2 max(**)	1000	2500	3700	4000	5000	6000
Fa max (*)	5500	6500	7000	8500	11500	13500

H	032/033	042/043	052/053	062/063	082/083	102/103	122/123	142/143
a	120	138	169	195	238	281	331	367
b	96	108	134	155	188	221	261	282
Fr2 max(**)	5500	6600	8000	12000	18000	22000	30000	55000

(**Fr2 max) Max admissible value of the reducer in static conditions and/or for limited operations. For continuous overhung loads please check the values on the performances tables calculated according to the casing, the shaft and bearings.

(* Fa) Max. axial load admissible in only one direction with the use of a thrust bearing (on request).

2.9 LUBRICATION

2.9.1 Information

In cases of ambient temperatures not envisaged in the table, call our Technical Service. In the case of temperatures under -30°C or over 60°C it is necessary to use oil seals with special properties. For operating ranges with temperatures under 0°C it is necessary to consider the following:

1. The motors need to be suitable for operation at the envisaged ambient temperature.
2. The power of the electric motor needs to be adequate for exceeding the higher starting torques required.
3. In case of cast-iron gear reducers, pay attention to impact loads since cast iron may have problems of fragility at temperatures under -15°C.
4. During the early stages of service, problems of lubrication may arise due to the high level of viscosity taken on by the oil and so it is wise to have a few minutes of rotation under no load.

For Atex gear reducers:

- Change oil as specified in the "Maintenance" table of the relevant "Use and Installation Instructions" manual (supplied with products).
- The use of oils other than the original one is forbidden.

2.9.2 Lubricants

Specifications of lubricants recommended by Motovario.
All units are supplied with ENI BLASIA 220 oil, unless otherwise specified by the client.

	HA32/3 ÷ A62/3 / H032/3 ÷ 142/3	
	Mineral oil	
T_{amb}°C ISO/SAE	(-5) ÷ (+40) ISO VG220	(-15) ÷ (+25) ISO VG150
ENI	BLASIA 220	BLASIA 150
SHELL	OMALA OIL220	OMALA OIL150
KLUBER	Kluberoil GEM 1-220N	Kluberoil GEM 1-150N
MOBIL	MOBILGEAR 600 XP220	MOBILGEAR 600 XP150
CASTROL	ALPHA SP 220	ALPHA SP 150
BP	ENERGOL GR-XP220	ENERGOL GR-XP150

2.9.3 Special lubricants

	T_{amb}°C	Polyglicol synthetic oil
ENI	**(-30) ÷ (+30)**	Blasia S 150 (ISO VG150)
	(-20) ÷ (+40)	Blasia S 220 (ISO VG220)
MOBIL	**(-45) ÷ (+0)**	SCH 624 (ISO VG32)
	(-40) ÷ (+5)	SCH 626 (ISO VG68)
KLUBER	**(-40) ÷ (+5)**	Klubersynth GH 6-32 (ISO VG32)
	(-35) ÷ 10)	Klubersynth GH 6-80 (ISO VG80)
	(-30) ÷ (+40)	Klubersynth GH 6-150 (ISO VG150)
	(-25) ÷ (+40)	Klubersynth GH 6-220 (ISO VG220)
	(-15) ÷ (+50)	Klubersynth GH 6-460 (ISO VG460)
	(-10) ÷ (+70)	Klubersynth GH 6-680 (ISO VG680)

	T_{amb}°C	Polyglicol synthetic oil for food grade
KLUBER	**(-30) ÷ (+15)**	Klubersynth UH1-6 100 (ISO VG100)
	(-25) ÷ (+40)	Klubersynth UH1-6 220 (ISO VG220)
	(-15) ÷ (+40)	Klubersynth UH1-6 320 (ISO VG320)
	(-15) ÷ (+50)	Klubersynth UH1-6 460 (ISO VG460)
	(-10) ÷ (+50)	Klubersynth UH1-6 680 (ISO VG680)

If ‘special’ lubricant is required please contact for Technical Assistance.

2.9.4 Quantity

- For the gear reducer HA series with 2, 3 stages and for the reducers H series with 1, 2, 3 stages it is always necessary to specify the envisaged position.
- The gear reducer HA series with 1, 2, 3 stages all sizes, H series ...with 1 stage sizes 040, 050, 060 and H series ... with 2, 3 stages sizes 030, 040, 050 are supplied complete with lubricant, have no oil plugs and need no maintenance.
- The gear reducer H series ... with 1 stage sizes 80,100,125 and with 2, 3 stages sizes 060, 080, 100, 125, 140 are supplied complete with lubricant and are fitted with oil plugs to suit any mounting position included in the catalogue.

It is recommended, after installation, to replace the closed plug used for transportation with the supplied breather plug. The amount of oil in the table (litres ~) are merely indicative only and for the proper topping up you will have to refer to the level plug or the dipstick, if any. Any deviations in level can depend on construction tolerances but also by the placement of the unit or by the mounting surface at the customers' premises. For this reason it is appropriate that the customer checks and, if necessary, restores the level when the unit are installed.

H - CH	HA31	HA41	CHA41	A51	A61	A32	A42	A52	A62	A33	A43	A53	A63
B3-B5	0,07	0,23	0,13	0,25	0,62	0,68	0,7	1,2	1,9	1,1	1,16	1,9	2,4
B8													
B6-B7													
V5-V1								1,6	2,1			2,5	3,1
V6-V3													

H - CH	041	051	061	081	101	121	041M	051M	061M	081M	101M	121M
B3-B5	0,5	0,7	0,7	1,45	3,5	4,7	0,5	0,5	0,5	1,5	3,5	3,9
B8	0,5	0,5	0,5	1,5	3,5	3,9	0,5	0,7	0,7	1,45	3,5	4,7
B6-B7	0,5	0,7	0,7	1,5	3,5	4,1	0,5	0,7	0,7	1,5	3,5	4,1
V5-V1	0,5	0,7	0,9	1,5	3,5	4,7	0,5	0,7	0,9	1,5	3,5	4,7
V6-V3	0,5	0,7	0,7	1,5	3,5	4,1	0,5	0,7	0,7	1,5	3,5	4,1

H - CH	032/033	042/043	052/053	062/063	082/083	102/103	122/123	142/143
B3-B5	0,8	1,2	1,4	2,4	4,5	8,1	12,5	22,5
B8	0,85	1,2	1,4	3,1	5	8,9	12,5	20
B6-B7	1	1,2	1,8	3	4,6	8,4	12,1	22,5
V5-V1	1,3	1,75	2,15	3,9	7,6	12,7	20,5	30,5
V6-V3	1,2	1,7	2,1	4,4	7,5	14,2	21	38

2.10 MOMENTS OF INERTIA

The following values of J1 moment of inertia are only estimated, referred to the maximum calculated, and to the gearbox input side.

HA-1	J_1 [Kg*m2]
A31	0,0001
A41	0,00005
A51	0,00008
A61	0,00042

HA-2/3	J_1 [Kg*m2]
A32/A33	0,00005
A42/A43	0,00005
A52/A53	0,00026
A62/A63	0,00032

H-1	J_1 [Kg*m2]
041	0,00008
051	0,00019
061	0,00046
081	0,0011
101	0,00345
121	0,00764

H-2/3	J_1 [Kg*m2]
032/033	0,00007
042/043	0,00007
052/053	0,00009
062/063	0,0002
082/083	0,00068
102/103	0,00106
122/123	0,00282
142/143	0,00442

3.1.1 HA31

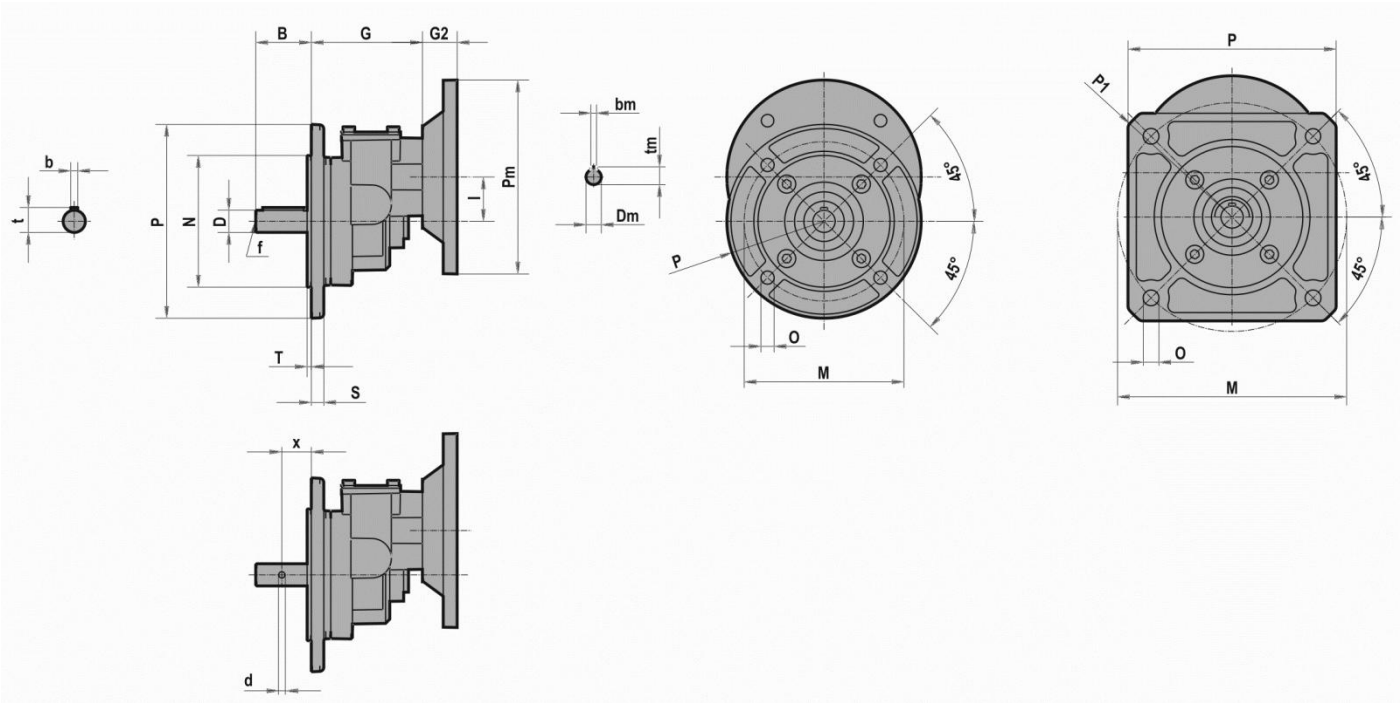

	D	B	b	t	x	d	f	G	I
HA31	11 j6	23	4	12,5	-	-	-	80	32
	14 j6	30	5	16	-	-	M6		
	16 j6	40	5	18	-	-	M6		
	19 j6	40	6	21,5	-	-	M6		
	16 j6	50	-	-	29	7	-		
	19 0/-0,2	60	-	-	37	6,5	-		
	19,7 +/-0,05	100	-	-	50	6	M8		
	20 j6	75	-	-	45	6	-		

	P	P1	M	N	O	S	T
HA31	116	150	127	-	M8	-	-
	138	160	127	-	M8	-	-
	140	-	115	95 f7	9,5	9	3
	150	200	165	-	11	-	-

IEC	Pm x Dm	G2
063	140x11	25
071	160x14	32
080	200x19	42

B5	Pm	Dm	bm	tm
063	140	11	4	12,8
071	160	14	5	16,3
080	200	19	6	21,8

3.1.2 HA.1

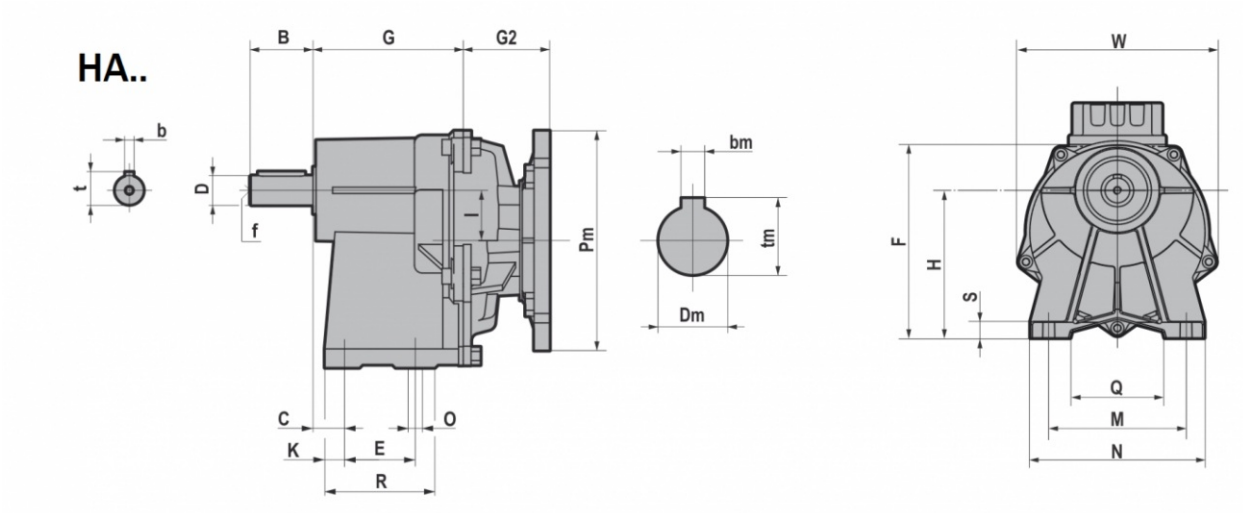

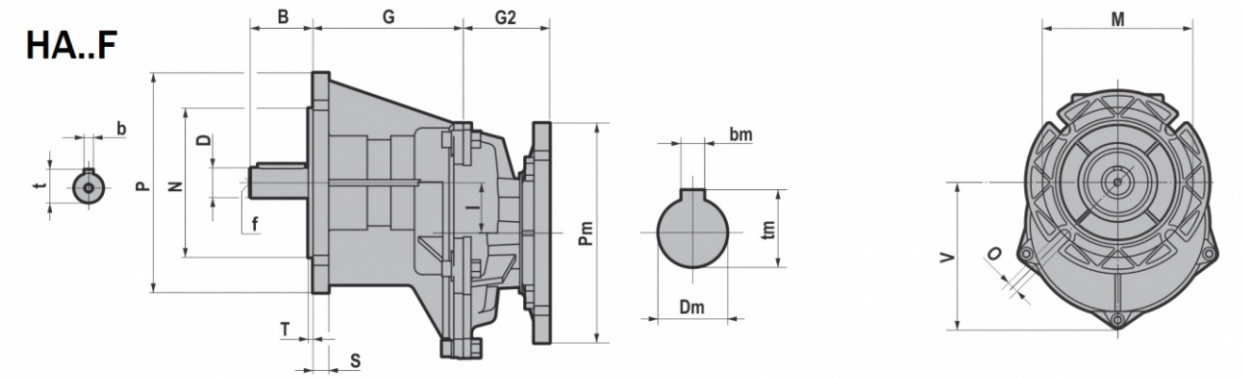

	D j6	B	C	E	F	G	H	I	K	M	N	O	Q	R	S	W	b	t	f
HA41/F	16	40	20	45	151	95,5	113	32	12,5	105	130	9	75	70	12	152	5	18	M6
	19																6	21,5	M6
HA51/F	24	50	6	70	169	104	130	32	15	150	180	11	115	100	12	152	8	27	M8
HA61/F	28	60	7,5	70	219,5	129	165	47,5	20	165	200	11	120	110	15	218	8	31	M8
	24	50															8	27	M8

	M	N f8	O	P	S	T	V
HA41F	115	95	9	140	10	3	111,5
HA51F	130	110	9	160	10	3,5	111,5
HA61F	165	130	11	200	15	3,5	161,5

			G2	
IEC	Pm x Dm	Pm x Dm	HA41/F - HA51/F	HA61/F
063	140X11	090x11	55	/
071	160X14	105x14	55	/
080	200X19	120x19	86	87,5
090	200X24	140x24	86	87,5
100-112	250X28	160x28	/	87,5

B5	Pm	Dm	bm	tm
063	140	11	4	12,8
071	160	14	5	16,3
080	200	19	6	21,8
090	200	24	8	27,3
100	250	28	8	31,3
112	250	28	8	31,3

B14	Pm	Dm	bm	tm
063	90	11	4	12,8
071	105	14	5	16,3
080	120	19	6	21,8
090	140	24	8	27,3
100	160	28	8	31,3
112	160	28	8	31,3

3.1.3 CHA.1

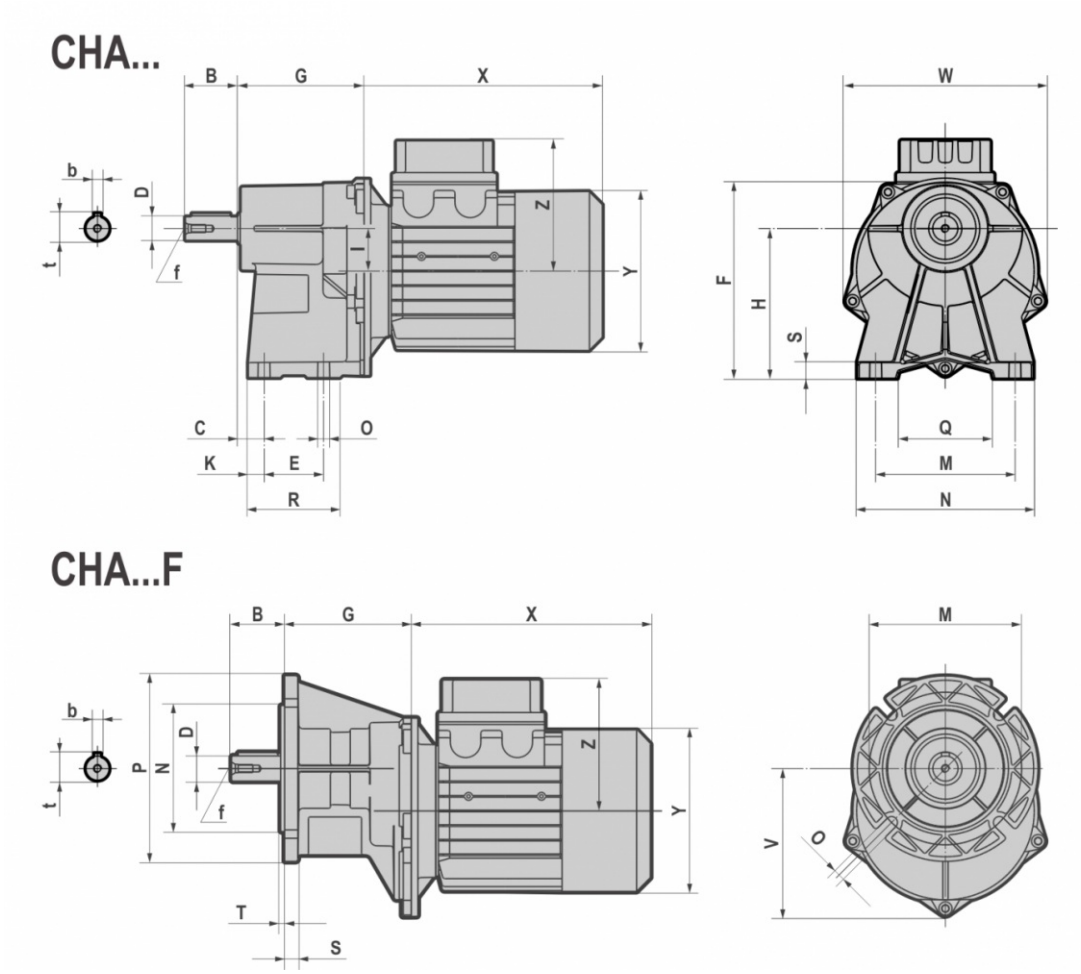

	D j6	B	C	E	F	G	H	I	K	M	N	O	Q	R	S	W	b	t	f
CHA41/F	16	40	20	45	151	95,5	113	32	12,5	105	130	9	75	70	12	152	5	18	M6
	19																6	21,5	M6
CHA51/F	24	50	6	70	169	104	130	32	15	150	180	11	115	100	12	152	8	27	M8
CHA61/F	28	60	7,5	70	219,5	129	165	47,5	20	165	200	11	120	110	15	218	8	31	M8
	24	50															8	27	M8

	M	N f8	O	P	S	T	V
CHA41F	115	95	9	140	10	3	111,5
CHA51F	130	110	9	160	10	3,5	111,5
CHA61F	165	130	11	200	15	3,5	161,5

	T (IE1 - IE2)							
		063	071	080	090S	090L	100	112
CHA41/F CHA51/F	X	180	205	223	232	257	/	/
	Y	121	139	158	173	173	/	/
	Z	104	112	122	130	130	/	/
CHA61/F	X	/	/	218	232	257	290	302
	Y	/	/	158	173	173	191	211
	Z	/	/	122	130	130	139	154

	TB (IE1 - IE2)							
		063	071	080	090S	090L	100	112
CHA41/F CHA51/F	X	238	271	294	309	334	/	/
	Y	121	139	158	173	173	/	/
	Z	119	129	137	157	157	/	/
CHA61/F	X	/	/	290	309	334	372	400
	Y	/	/	158	173	173	191	211
	Z	/	/	137	157	157	230	230

3.1.4 IHA.1

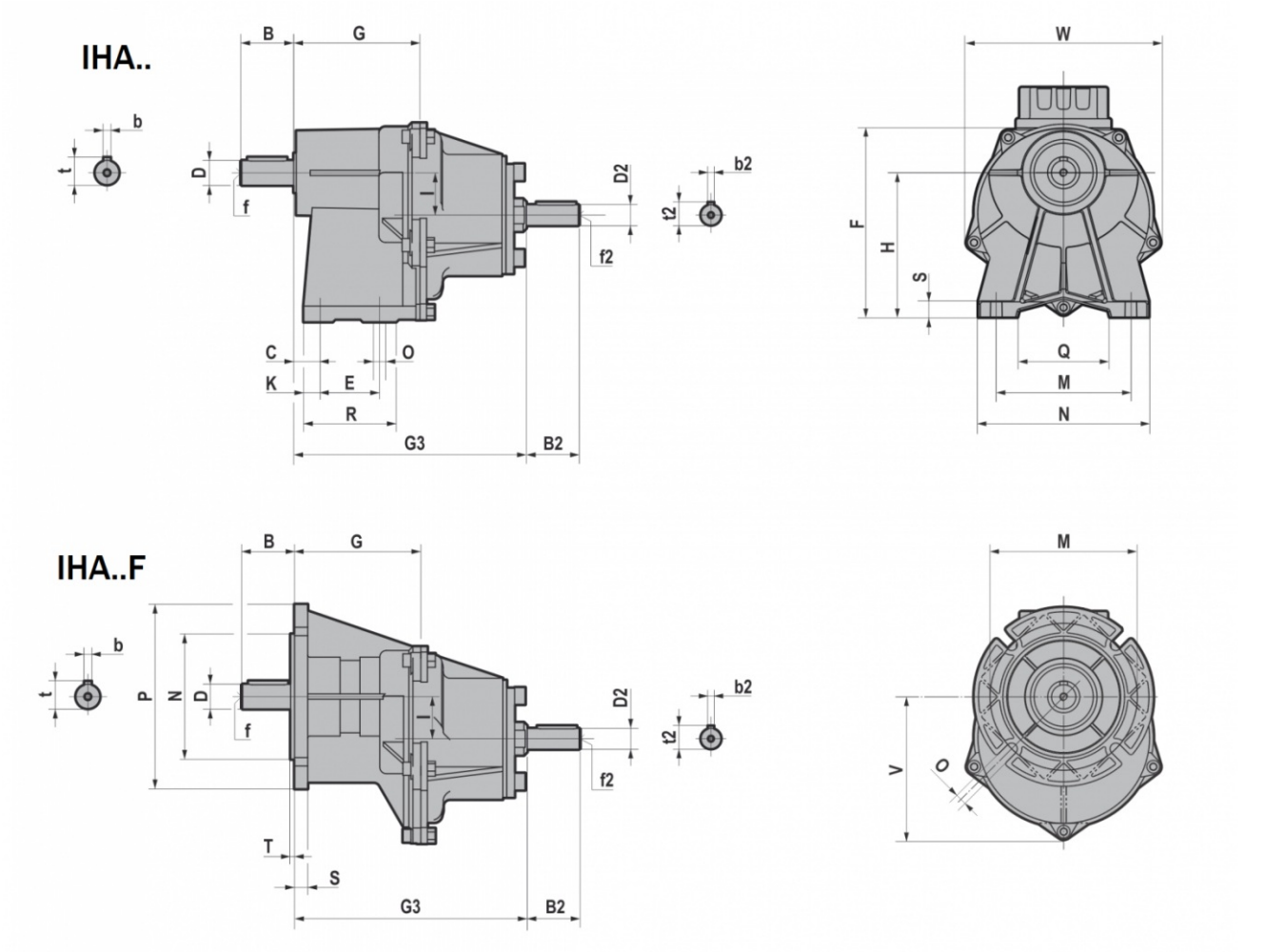

	D j6	B	C	E	F	G	H	I	K	M	N	O	Q	R	S	W	b	t	f
IHA41/F	16	40	20	45	151	95,5	113	32	12,5	105	130	9	75	70	12	152	5	18	M6
	19																6	21,5	M6
IHA51/F	24	50	6	70	169	104	130	32	15	150	180	11	115	100	12	152	8	27	M8
IHA61/F	28	60	7,5	70	219,5	129	165	47,5	20	165	200	11	120	110	15	218	8	31	M8
	24	50															8	27	M8

	M	N f8	O	P	S	T	V
IHA41F	115	95	9	140	10	3	111,5
IHA51F	130	110	9	160	10	3,5	111,5
IHA61F	165	130	11	200	15	3,5	161,5

	G3	D2 j6	B2	b2	f2	t2
IHA41/F	176	16	40	5	M6	18
IHA51/F	184,5	16	40	5	M6	18
IHA61/F	209	19	40	6	M6	21,5

3.1.5 HA.2

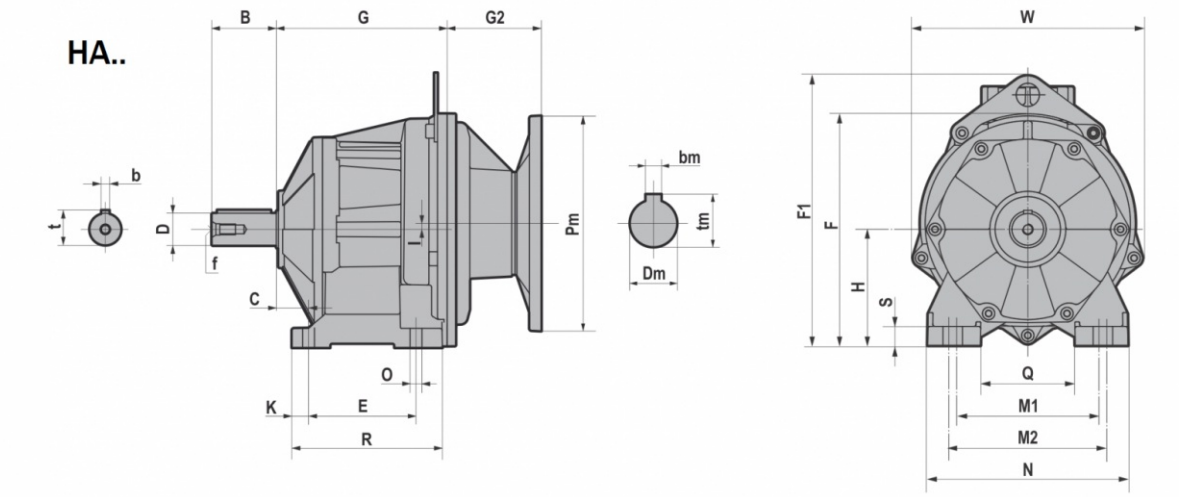

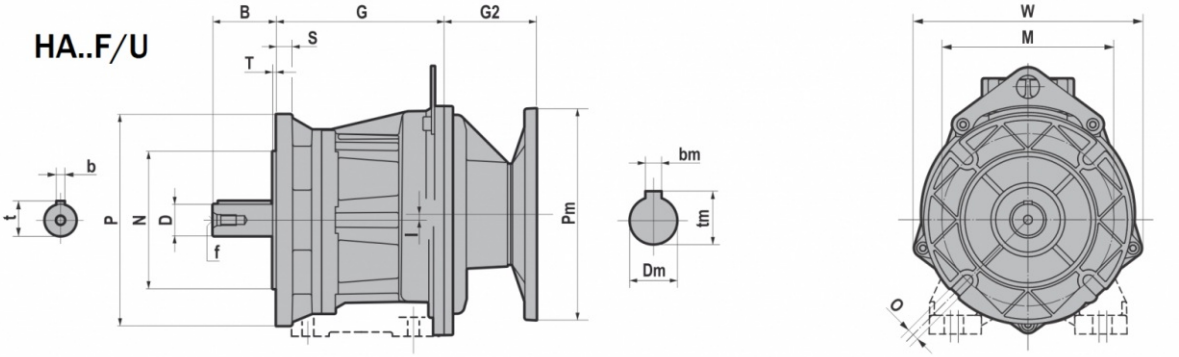

HA../F/U	D j6	B	b	t	f	C	E	F	F1	G	H	I	K	M1	M2	N	O	Q	R	S	W
HA32	20	40	6	22,5	M6	18	80	155	/	117,5	75	10	13	110	120	145	9	75	111	15	152
	19	40	6	21,5	M6																
	16	40	5	18	M6																
	14	30	5	16	M6																
HA42	25	50	8	28	M10	25	85	160	/	124,5	80	10	13	110	120	145	9	75	111	15	152
	28	60	8	31	M10																
	24	50	8	27	M8																
	22	50	6	24,5	M8																
	20	40	6	22,5	M6																
	19	40	6	21,5	M6																
HA52	30	60	8	33	M10	30	100	217,5	255,5	159	110	5,5	15,5	135	150	190	11	90	140	18	218
	35	70	10	38	M12																
	32	60	10	35	M10																
	28	60	8	31	M10																
	25	50	8	28	M10																
	24	50	8	27	M8																
HA62	40	80	12	43	M16	35	110	237,5	275,5	168	120	15,5	20	170	185	230	14	120	150	20	218
	35 k6	70	10	38	M12																
	30	60	8	33	M10																
	28	60	8	31	M10																

3.1 REDUCERS/GEARED MOTORS

	P	M	N f8	O	G	I	S	T	W
HA32F/U	140	115	95	9	117,5	10	10	3	152
	120	100	80						
HA42F/U	160	130	110	9	124,5	10	10	3,5	152
	140	115	95						
HA52F/U	200	165	130	11	159	5,5	15	3,5	218
	160	130	110						
HA62F/U	250	215	180	14	168	15,5	15	4	218
	200	165	130						

			G2	
IEC	Pm x Dm	Pm x Dm	HA32/F/U - HA42/F/U	HA52/F/U - HA62/F/U
063	**140X11**	**090x11**	55,0	/
071	**160X14**	**105x14**	55,0	/
080	**200X19**	**120x19**	86,0	87,5
090	**200X24**	**140x24**	86,0	87,5
100-112	**250X28**	**160x28**	/	87,5

B5	Pm	Dm	bm	tm
063	140	11	4	12,8
071	160	14	5	16,3
080	200	19	6	21,8
090	200	24	8	27,3
100	250	28	8	31,3
112	250	28	8	31,3

B14	Pm	Dm	bm	tm
063	90	11	4	12,8
071	105	14	5	16,3
080	120	19	6	21,8
090	140	24	8	27,3
100	160	28	8	31,3
112	160	28	8	31,3

3.1.6 CHA.2

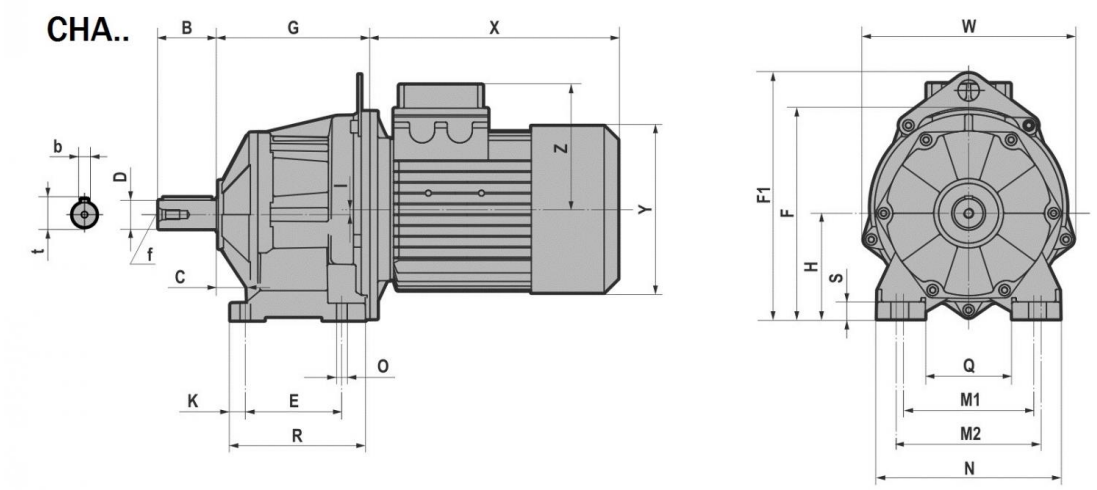

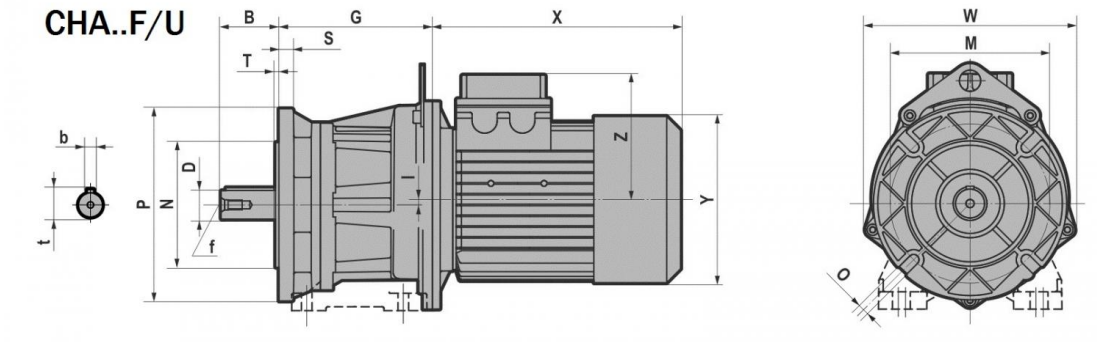

CHA../F/U	D j6	B	b	t	f	C	E	F	F1	G	H	I	K	M1	M2	N	O	Q	R	S	W
CHA32	20	40	6	22,5	M6	18	80	155	/	117,5	75	10	13	110	120	145	9	75	111	15	152
	19	40	6	21,5	M6																
	16	40	5	18	M6																
	14	30	5	16	M6																
CHA42	25	50	8	28	M10	25	85	160	/	124,5	80	10	13	110	120	145	9	75	111	15	152
	28	60	8	31	M10																
	24	50	8	27	M8																
	22	50	6	24,5	M8																
	20	40	6	22,5	M6																
	19	40	6	21,5	M6																
CHA52	30	60	8	33	M10	30	100	217,5	255,5	159	110	5,5	15,5	135	150	190	11	90	140	18	218
	35	70	10	38	M12																
	32	60	10	35	M10																
	28	60	8	31	M10																
	25	50	8	28	M10																
	24	50	8	27	M8																
CHA62	40	80	12	43	M16	35	110	237,5	275,5	168	120	15,5	20	170	185	230	14	120	150	20	218
	35 k6	70	10	38	M12																
	30	60	8	33	M10																
	28	60	8	31	M10																

3.1 REDUCERS/GEARED MOTORS

	P	M	N f8	O	G	I	S	T	W
CHA32F/U	140	115	95	9	117,5	10	10	3	152
	120	100	80						
CHA42F/U	160	130	110	9	124,5	10	10	3,5	152
	140	115	95						
CHA52F/U	200	165	130	11	159	5,5	15	3,5	218
	160	130	110						
CHA62F/U	250	215	180	14	168	15,5	15	4	218
	200	165	130						

T (IE1 - IE2)								
CHA..F/U		063	071	080	090S	090L	100	112
CHA32 CHA42	X	180	205	223	232	257	/	/
	Y	121	139	158	173	173	/	/
	Z	104	112	122	130	130	/	/
CHA52 CHA62	X	/	/	218	232	257	290	302
	Y	/	/	158	173	173	191	211
	Z	/	/	122	130	130	139	154

TB (IE1 - IE2)								
CHA..F/U		063	071	080	090S	090L	100	112
CHA32 CHA42	X	238	271	294	309	334	/	/
	Y	121	139	158	173	173	/	/
	Z	119	129	137	157	157	/	/
CHA52 CHA62	X	/	/	290	309	334	372	400
	Y	/	/	158	173	173	191	211
	Z	/	/	137	157	157	230	230

3.1.7 IHA.2

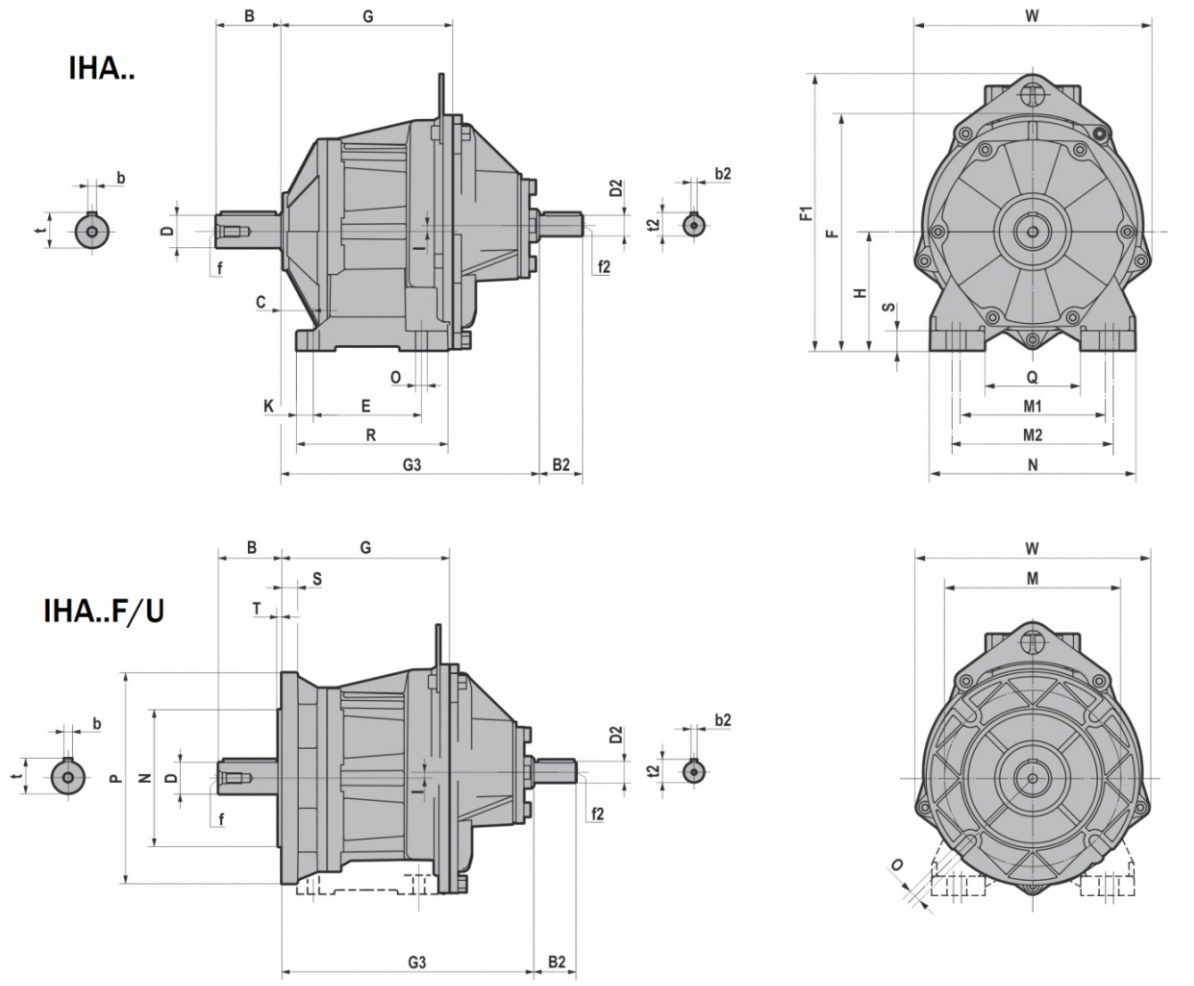

IHA../F/U	D j6	B	b	t	f	C	E	F	F1	G	H	I	K	M1	M2	N	O	Q	R	S	W
IHA32	20	40	6	22,5	M6	18	80	155	/	117,5	75	10	13	110	120	145	9	75	111	15	152
	19	40	6	21,5	M6																
	16	40	5	18	M6																
	14	30	5	16	M6																
IHA42	25	50	8	28	M10	25	85	160	/	124,5	80	10	13	110	120	145	9	75	111	15	152
	28	60	8	31	M10																
	24	50	8	27	M8																
	22	50	6	24,5	M8																
	20	40	6	22,5	M6																
	19	40	6	21,5	M6																
IHA52	30	60	8	33	M10	30	100	217,5	255,5	159	110	5,5	15,5	135	150	190	11	90	140	18	218
	35	70	10	38	M12																
	32	60	10	35	M10																
	28	60	8	31	M10																
	25	50	8	28	M10																
	24	50	8	27	M8																
IHA62	40	80	12	43	M16	35	110	237,5	275,5	168	120	15,5	20	170	185	230	14	120	150	20	218
	35 k6	70	10	38	M12																
	30	60	8	33	M10																
	28	60	8	31	M10																

3.1 REDUCERS/GEARED MOTORS

	P	M	N f8	O	G	I	S	T	W
IHA32F/U	140	115	95	9	117,5	10	10	3	152
	120	100	80						
IHA42F/U	160	130	110	9	124,5	10	10	3,5	152
	140	115	95						
IHA52F/U	200	165	130	11	159	5,5	15	3,5	218
	160	130	110						
IHA62F/U	250	215	180	14	168	15,5	15	4	218
	200	165	130						

	G3	D2 j6	B2	b2	f2	t2
IHA32/F/U	198	16	40	5	M6	18
IHA42/F/U	205	16	40	5	M6	18
IHA52/F/U	239	19	40	6	M6	21,5
IHA62/F/U	248	19	40	6	M6	21,5

3.1.8 HA.3

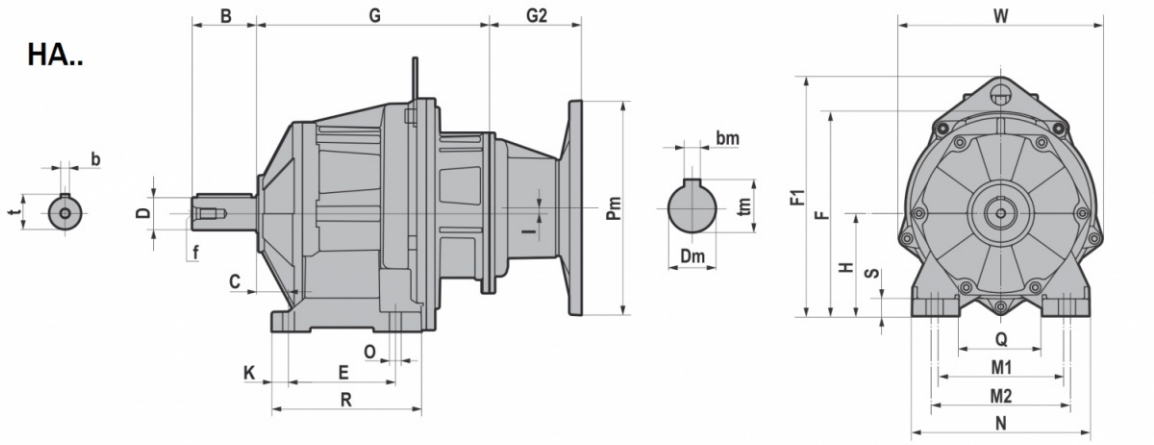

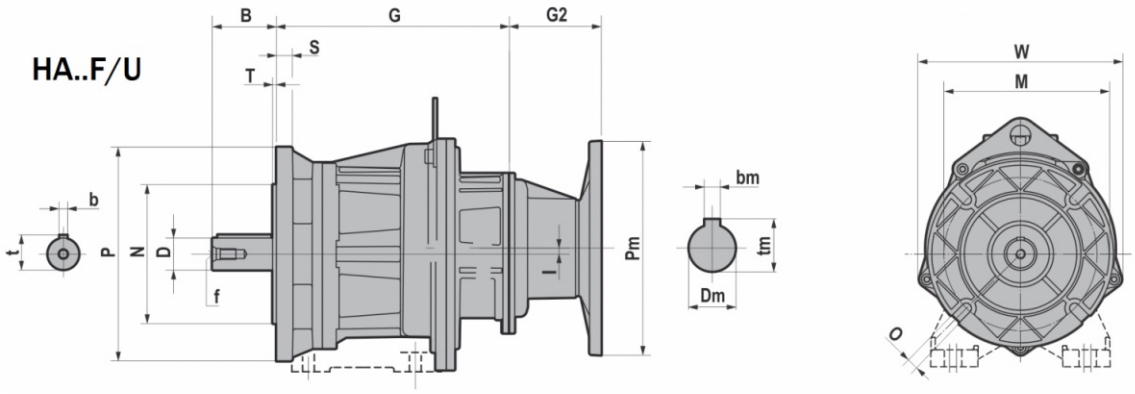

HA..F/U	D j6	B	b	t	f	C	E	F	F1	G	H	I	K	M1	M2	N	O	Q	R	S	W
HA33	20	40	6	22,5	M6	18	80	155	/	117,5	75	10	13	110	120	145	9	75	111	15	152
	19	40	6	21,5	M6																
	16	40	5	18	M6																
	14	30	5	16	M6																
HA43	25	50	8	28	M10	25	85	160	/	124,5	80	10	13	110	120	145	9	75	111	15	152
	28	60	8	31	M10																
	24	50	8	27	M8																
	22	50	6	24,5	M8																
	20	40	6	22,5	M6																
	19	40	6	21,5	M6																
HA53	30	60	8	33	M10	30	100	217,5	255,5	159	110	5,5	15,5	135	150	190	11	90	140	18	218
	35	70	10	38	M12																
	32	60	10	35	M10																
	28	60	8	31	M10																
	25	50	8	28	M10																
	24	50	8	27	M8																
HA63	40	80	12	43	M16	35	110	237,5	275,5	168	120	15,5	20	170	185	230	14	120	150	20	218
	35 k6	70	10	38	M12																
	30	60	8	33	M10																
	28	60	8	31	M10																

3.1 REDUCERS/GEARED MOTORS

	P	M	N f8	O	G	I	S	T	W
HA33F/U	140	115	95	9	117,5	10	10	3	152
	120	100	80						
HA43F/U	160	130	110	9	124,5	10	10	3,5	152
	140	115	95						
HA53F/U	200	165	130	11	159	5,5	15	3,5	218
	160	130	110						
HA63F/U	250	215	180	14	168	15,5	15	4	218
	200	165	130						

			G2
IEC	Pm x Dm	Pm x Dm	HA33/F/U - HA43/F/U - HA53/F/U - HA63/F/U
063	**140X11**	**090x11**	55
071	**160X14**	**105x14**	55
080	**200X19**	**120x19**	86
090	**200X24**	**140x24**	86

B5	Pm	Dm	bm	tm
063	140	11	4	12,8
071	160	14	5	16,3
080	200	19	6	21,8
090	200	24	8	27,3

B14	Pm	Dm	bm	tm
063	90	11	4	12,8
071	105	14	5	16,3
080	120	19	6	21,8
090	140	24	8	27,3

3.1.9 CHA.3

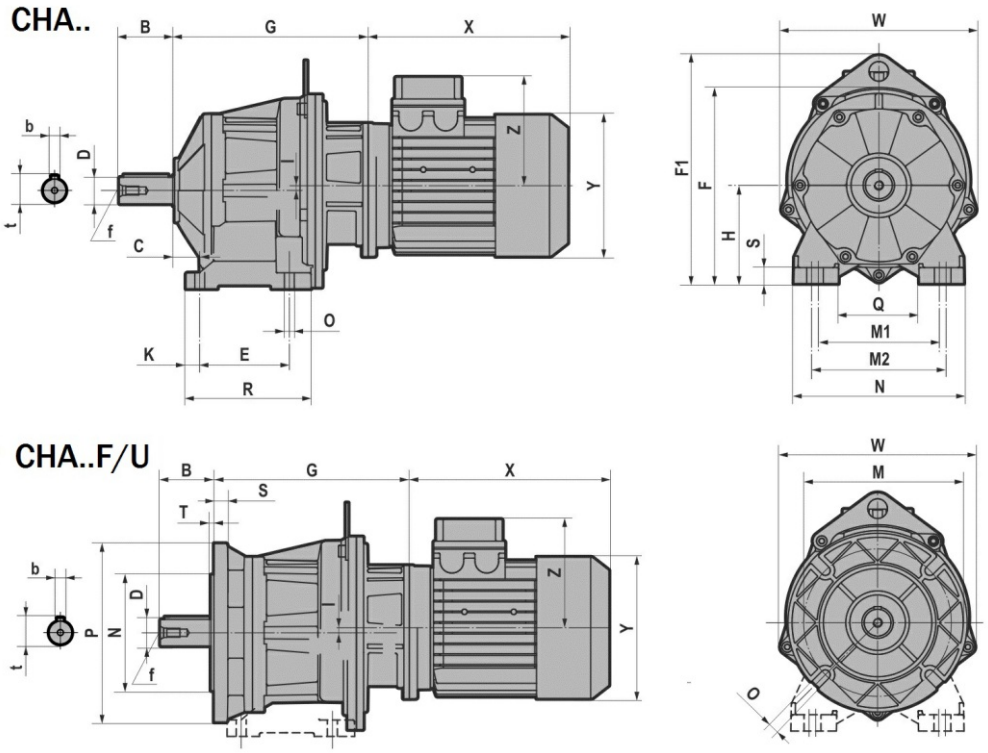

CHA..F/U	D j6	B	b	t	f	C	E	F	F1	G	H	I	K	M1	M2	N	O	Q	R	S	W
CHA33	20	40	6	22,5	M6	18	80	155	/	117,5	75	10	13	110	120	145	9	75	111	15	152
	19	40	6	21,5	M6																
	16	40	5	18	M6																
	14	30	5	16	M6																
CHA43	25	50	8	28	M10	25	85	160	/	124,5	80	10	13	110	120	145	9	75	111	15	152
	28	60	8	31	M10																
	24	50	8	27	M8																
	22	50	6	24,5	M8																
	20	40	6	22,5	M6																
	19	40	6	21,5	M6																
CHA53	30	60	8	33	M10	30	100	217,5	255,5	159	110	5,5	15,5	135	150	190	11	90	140	18	218
	35	70	10	38	M12																
	32	60	10	35	M10																
	28	60	8	31	M10																
	25	50	8	28	M10																
	24	50	8	27	M8																
CHA63	40	80	12	43	M16	35	110	237,5	275,5	168	120	15,5	20	170	185	230	14	120	150	20	218
	35 k6	70	10	38	M12																
	30	60	8	33	M10																
	28	60	8	31	M10																

3.1 REDUCERS/GEARED MOTORS

	P	M	N f8	O	G	I	S	T	W
CHA33F/U	140	115	95	9	117,5	10	10	3	152
	120	100	80						
CHA43F/U	160	130	110	9	124,5	10	10	3,5	152
	140	115	95						
CHA53F/U	200	165	130	11	159	5,5	15	3,5	218
	160	130	110						
CHA63F/U	250	215	180	14	168	15,5	15	4	218
	200	165	130						

T (IE1 - IE2)						
CHA..F/U		063	071	080	090S	090L
CHA33 CHA43 CHA53 CHA63	X	180	205	223	232	257
	Y	121	139	158	173	173
	Z	104	112	122	130	130

TB (IE1 - IE2)						
CHA..F/U		063	071	080	090S	090L
CHA33 CHA43 CHA53 CHA63	X	238	271	294	309	334
	Y	121	139	158	173	173
	Z	119	129	137	157	157

3.1.10 IHA.3

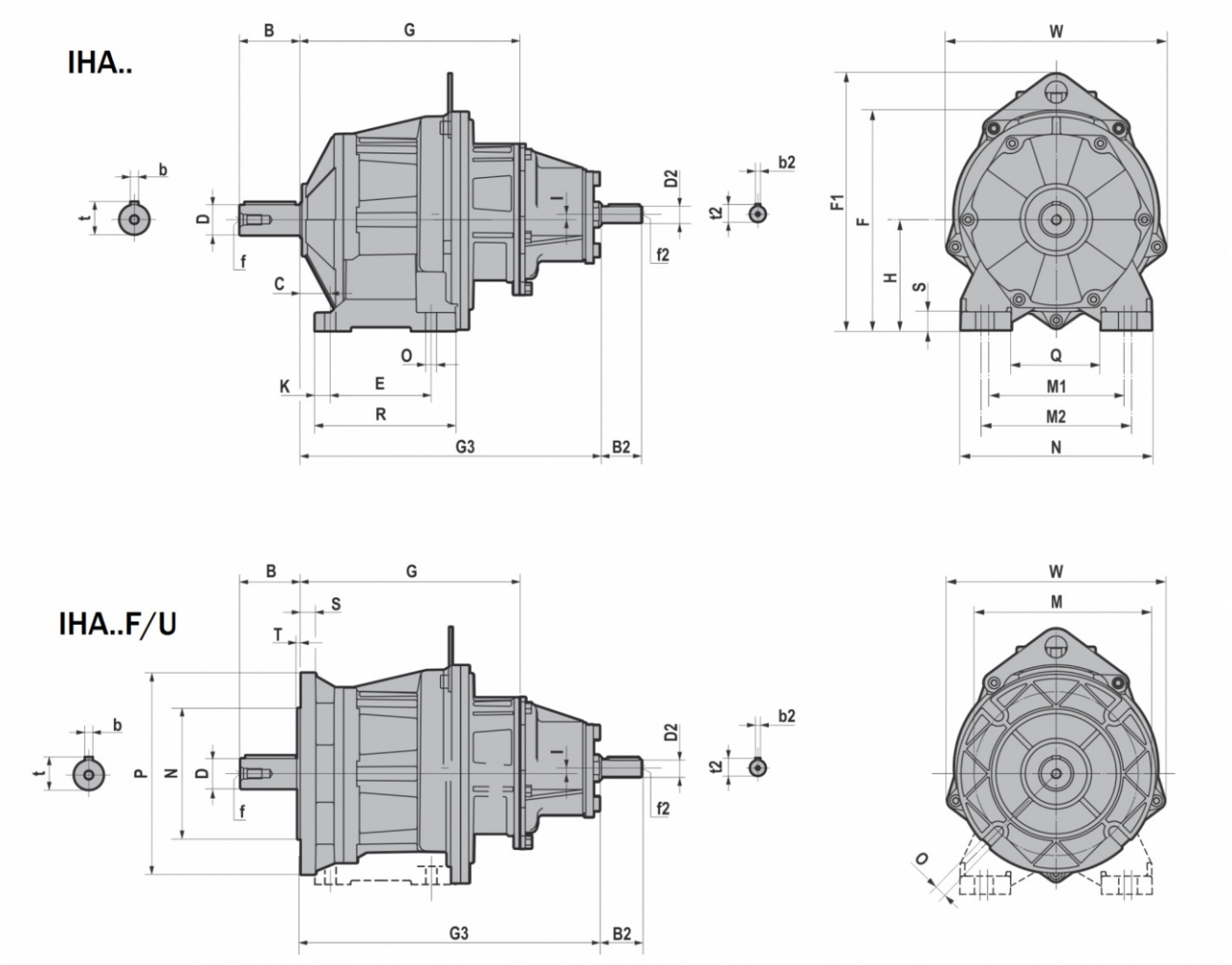

3.1 REDUCERS/GEARED MOTORS

IHA..F/U	D j6	B	b	t	f	C	E	F	F1	G	H	I	K	M1	M2	N	O	Q	R	S	W
IHA33	20	40	6	22,5	M6	18	80	155	/	117,5	75	10	13	110	120	145	9	75	111	15	152
	19	40	6	21,5	M6																
	16	40	5	18	M6																
	14	30	5	16	M6																
IHA43	25	50	8	28	M10	25	85	160	/	124,5	80	10	13	110	120	145	9	75	111	15	152
	28	60	8	31	M10																
	24	50	8	27	M8																
	22	50	6	24,5	M8																
	20	40	6	22,5	M6																
	19	40	6	21,5	M6																
IHA53	30	60	8	33	M10	30	100	217,5	255,5	159	110	5,5	15,5	135	150	190	11	90	140	18	218
	35	70	10	38	M12																
	32	60	10	35	M10																
	28	60	8	31	M10																
	25	50	8	28	M10																
	24	50	8	27	M8																
IHA63	40	80	12	43	M16	35	110	237,5	275,5	168	120	15,5	20	170	185	230	14	120	150	20	218
	35 k6	70	10	38	M12																
	30	60	8	33	M10																
	28	60	8	31	M10																

	P	M	N f8	O	G	I	S	T	W
IHA33F/U	140	115	95	9	117,5	10	10	3	152
	120	100	80						
IHA43F/U	160	130	110	9	124,5	10	10	3,5	152
	140	115	95						
IHA53F/U	200	165	130	11	159	5,5	15	3,5	218
	160	130	110						
IHA63F/U	250	215	180	14	168	15,5	15	4	218
	200	165	130						

	G3	D2 j6	B2	b2	f2	t2
IHA33	251	16	40	5	M6	18
IHA43	258	16	40	5	M6	18
IHA53	299	16	40	5	M6	18
IHA63	308	16	40	5	M6	18

3.1.11 H..1

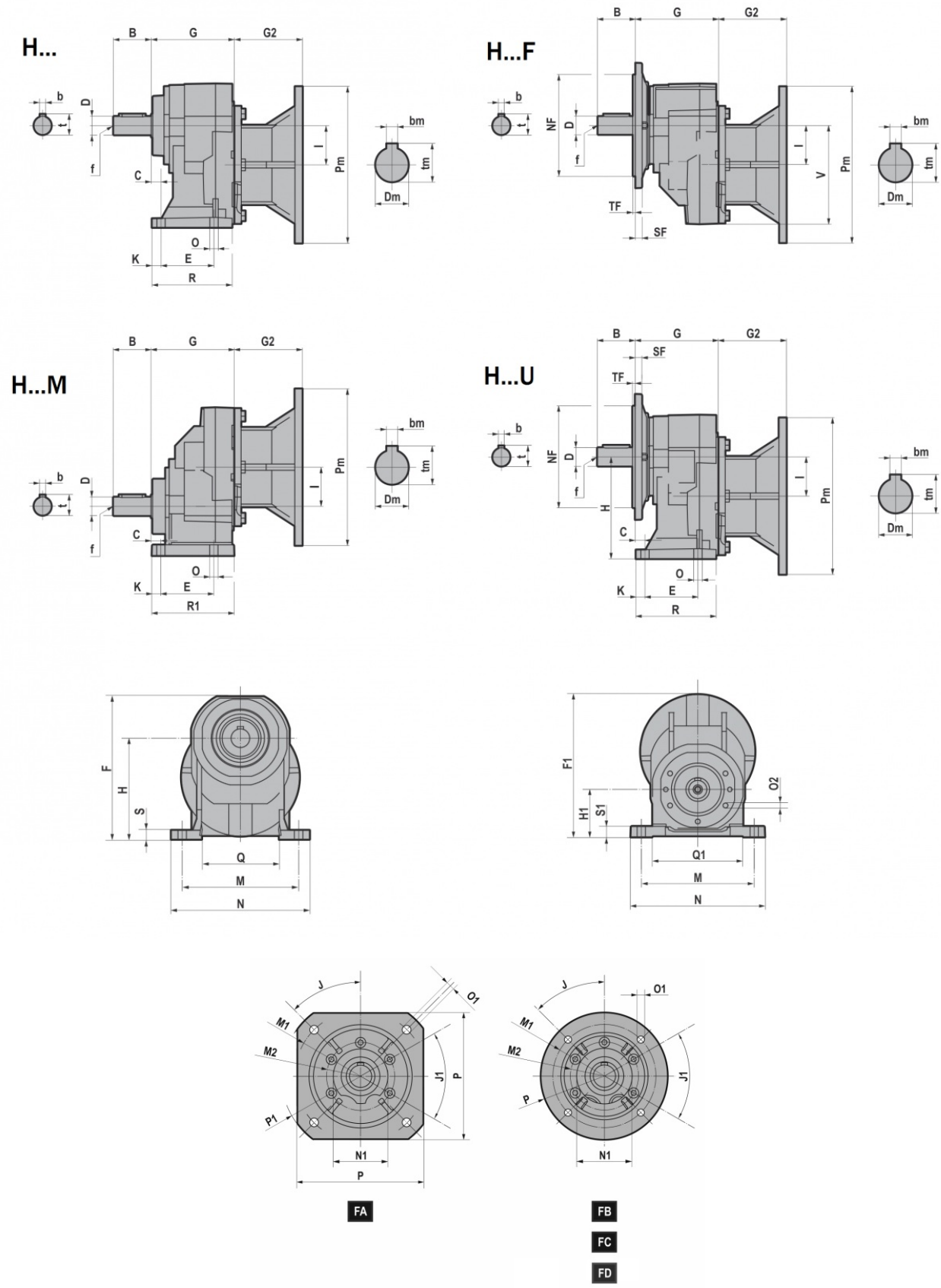
H...
H...F
H...M
H...U
B
G
G2
b
t
D
f
C
O
K
E
R
R1
I
Pm
bm
tm
Dm
NF
TF
SF
V
H
F
S
Q
M
N
F1
H1
S1
O2
Q1
J
O1
M1
M2
P1
J1
P
N1
FA
FB
FC
FD

3.1 REDUCERS/GEARED MOTORS

H.../F/U/M	D	B	C	E	F	F1	G	H	H1	I	K	M	N	O	O2	Q	Q1	R	R1	S	S1	~V	b	t	f
H041	19 j6	40	13	45	168,5	168	100	120	50	42	12	105	130 125 (041M)	9	M8x17 (n.5)	74	55	86,5	98	9,5	8	118	6	21,5	M6
H051	24 j6	50	13	70	183,5	189	110	130	63	50	12	150	178	11	M8x17 (n.5)	100	121,5	106	109	11,5	14	126	8	27	M8
H061	28 j6	60	16	70	231	216	125	165	80	60	14	165	195	11	M8x17 (n.5)	110	135,5	120	123	15	16	136	8	31	M10
H081	38 k6	80	25	85	277	284	135	195	100	80	23	185	230 232 (081M)	14	M10x20 (n.7)	123	151	130	135	15	20	184	10	41	M12
H101	48 k6	110	19	130	355	377	180	252	125	100	17	240	295	18	M10x20 (n.6)	162	185,5	173	178	16	22	251,5	14	51,5	M16
H121	55 m6	110	25	150	422	426,5	210	300	160	115	22	280	340	18	M12x25 (n.7)	183	224	202	207	19	25	266,5	16	59	M20

		J	J1	M1	M2	NF f8	N1	O1	P	P1	SF	TF
H041F/U H051F/U	**FA**	45	45	Ø165	Ø85	130	70	11	160	Ø200	9	3,5
	FB			Ø130	Ø85	110		9	Ø160	/	9	3,5
	FC			Ø115	Ø85	95		9	Ø140	/	9	3
	FD			Ø100	Ø85	80		M8	Ø120	/	9	3
H061F/U	**FA**	45	45	Ø215	Ø105	180	90	14	200	Ø250	12	4
	FB			Ø165	Ø105	130		11	Ø200	/	12	3,5
H081F/U H101F/U	**FA**	45	45	Ø265	Ø130	230	110	14	250	Ø300	15	4
	FB			Ø215	Ø130	180		14	Ø250	/	15	4
	FC			Ø165	Ø130	130		11	Ø200	/	15	3,5
H121F/U	**FA**	45	45	Ø300	Ø165	250	130	18	300	Ø350	16	5
	FB			Ø265	Ø165	230		14	Ø300	/	16	4
	FC			Ø 215	Ø165	180		14	Ø250	/	16	4

		G2		
IEC	Pm x Dm	H041/F/U/M H051/F/U/M H061/F/U/M	H081/F/U/M	H101/F/U/M H121/F/U/M
071	**160x14**	69,0	/	/
080	**200x19**	90,0	70,0	/
090	**200x24**	90,0	70,0	/
100-112	**250x28**	105,0	85,0	75,5
132	**300x38**	/	110,0	100,5
160	**350x42**	/	/	148,0
180	**350x48**	/	/	148,0
200	**400x55**	/	/	185,0

B5	Pm	Dm	bm	tm
071	160	14	5	16,3
080	200	19	6	21,8
090	200	24	8	27,3
100	250	28	8	31,3
112	250	28	8	31,3
132	300	38	10	41,3
160	350	42	12	45,3
180	350	48	14	51,8
200	400	55	16	59,3

3.1.12 CH..1

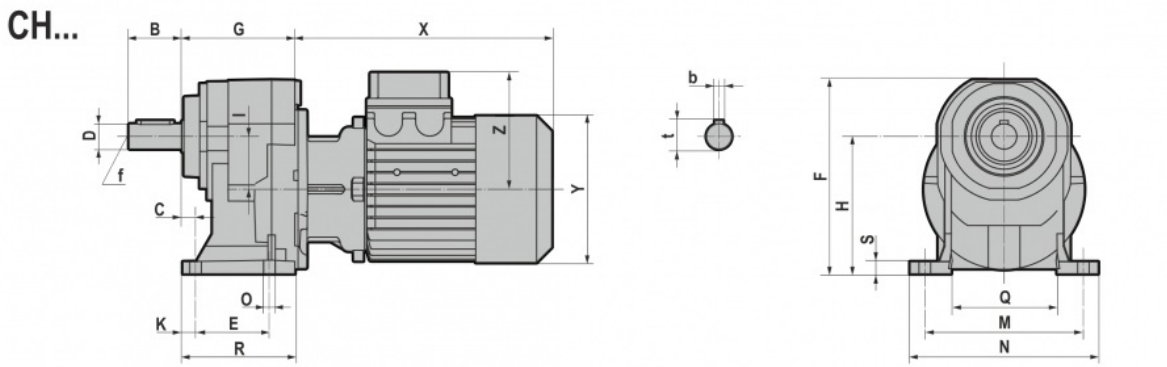
CH...
B
G
X
D
f
C
I
Z
Y
O
K
E
R
b
t
F
H
S
Q
M
N

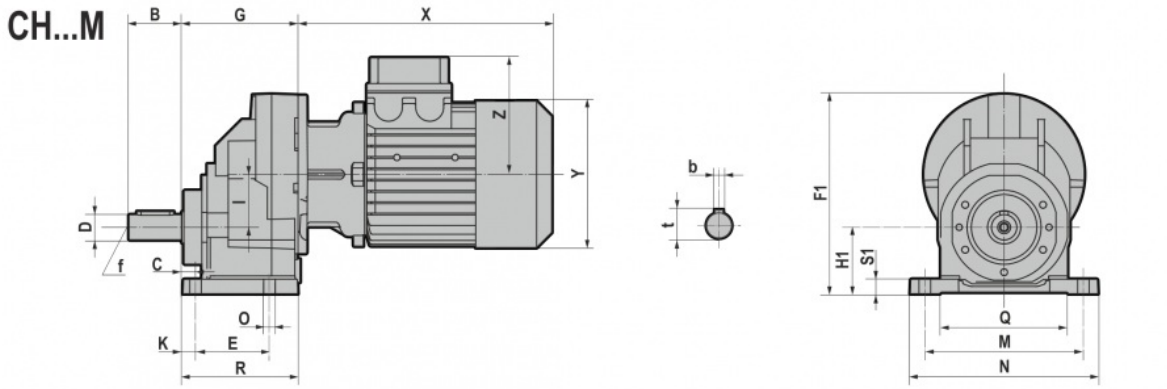
CH...M
B
G
X
D
f
C
I
Z
Y
O
K
E
R
b
t
F1
H1
S1
Q
M
N

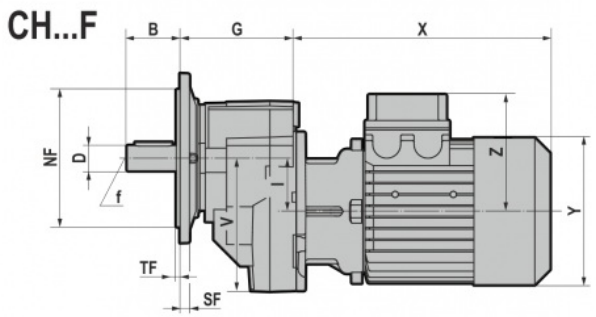
CH...F
B
G
X
NF
D
f
I
V
Z
Y
TF
SF

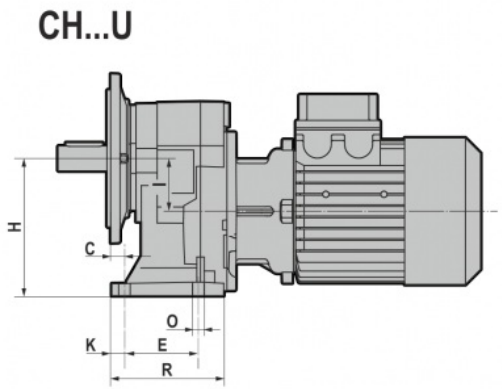
CH...U
H
C
I
O
K
E
R

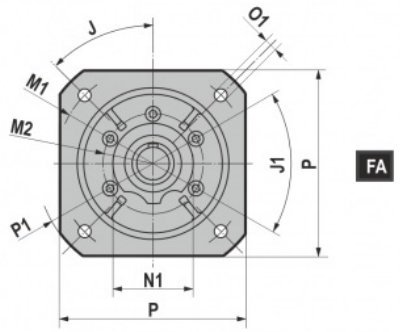
J
O1
M1
M2
P1
J1
P
N1
P
FA

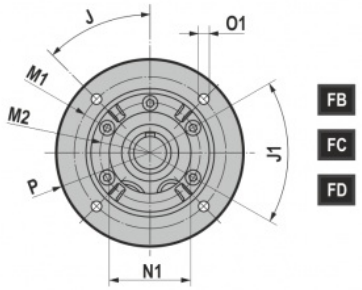
J
O1
M1
M2
P
J1
N1
FB
FC
FD

3.1 REDUCERS/GEARED MOTORS

CH.../F/U/M	D	B	C	E	F	F1	G	H	H1	I	K	M	N	O	O2	Q	Q1	R	R1	S	S1	~V	b	t	f
CH041	19 j6	40	13	45	168,5	168	100	120	50	42	12	105	130 125 (041M)	9	M8x17 (n.5)	74	55	86,5	98	9,5	8	118	6	21,5	M6
CH051	24 j6	50	13	70	183,5	189	110	130	63	50	12	150	178	11	M8x17 (n.5)	100	121,5	106	109	11,5	14	126	8	27	M8
CH061	28 j6	60	16	70	231	216	125	165	80	60	14	165	195	11	M8x17 (n.5)	110	135,5	120	123	15	16	136	8	31	M10
CH081	38 k6	80	25	85	277	284	135	195	100	80	23	185	230 232 (081M)	14	M10x20 (n.7)	123	151	130	135	15	20	184	10	41	M12
CH101	48 k6	110	19	130	355	377	180	252	125	100	17	240	295	18	M10x20 (n.6)	162	185,5	173	178	16	22	251,5	14	51,5	M16
CH121	55 m6	110	25	150	422	426,5	210	300	160	115	22	280	340	18	M12x25 (n.7)	183	224	202	207	19	25	266,5	16	59	M20

		J	J1	M1	M2	NF f8	N1	O1	P	P1	SF	TF
CH041F/U CH051F/U	FA	45	45	Ø165	Ø85	130	70	11	160	Ø200	9	3,5
	FB			Ø130	Ø85	110		9	Ø160	/	9	3,5
	FC			Ø115	Ø85	95		9	Ø140	/	9	3
	FD			Ø100	Ø85	80		M8	Ø120	/	9	3
CH061F/U	FA	45	45	Ø215	Ø105	180	90	14	200	Ø250	12	4
	FB			Ø165	Ø105	130		11	Ø200	/	12	3,5
CH081F/U CH101F/U	FA	45	45	Ø265	Ø130	230	110	14	250	Ø300	15	4
	FB			Ø215	Ø130	180		14	Ø250	/	15	4
	FC			Ø165	Ø130	130		11	Ø200	/	15	3,5
CH121F/U	FA	45	45	Ø300	Ø165	250	130	18	300	Ø350	16	5
	FB			Ø265	Ø165	230		14	Ø300	/	16	4
	FC			Ø 215	Ø165	180		14	Ø250	/	16	4

T (IE1 - IE2)										
CH.../F/U/M		063	071	080	090S	090L	100	112	132S	132M/L
CH041 CH051 CH061	X	215	241	268	296	321	333	351	/	/
	Y	121	139	158	173	173	191	211	/	/
	Z	104	112	122	130	130	139	154	/	/
CH081	X	/	221	248	276	301	335	356	405	443
	Y	/	139	158	173	173	191	211	249	249
	Z	/	112	122	130	130	139	154	194	194
CH101 CH121	X	/	/	/	267	292	326	347	396	434
	Y	/	/	/	173	173	191	211	249	249
	Z	/	/	/	130	130	139	154	194	194

TB (IE1 - IE2)										
CH.../F/U/M		063	071	080	090S	090L	100	112	132S	132M/L
CH041 CH051 CH061	X	273	306.5	341	373	398	415	448	/	/
	Y	121	139	158	173	173	191	211	/	/
	Z	119	129	137	157	157	168	183	/	/
CH081	X	/	286.5	321	353	378	417	453	505	547
	Y	/	139	158	173	173	191	211	249	249
	Z	/	129	137	157	157	168	183	230	230
CH101 CH121	X	/	/	/	343	368	407	443	495	537
	Y	/	/	/	173	173	191	211	249	249
	Z	/	/	/	157	157	168	183	230	230

3.1.13 IH..1

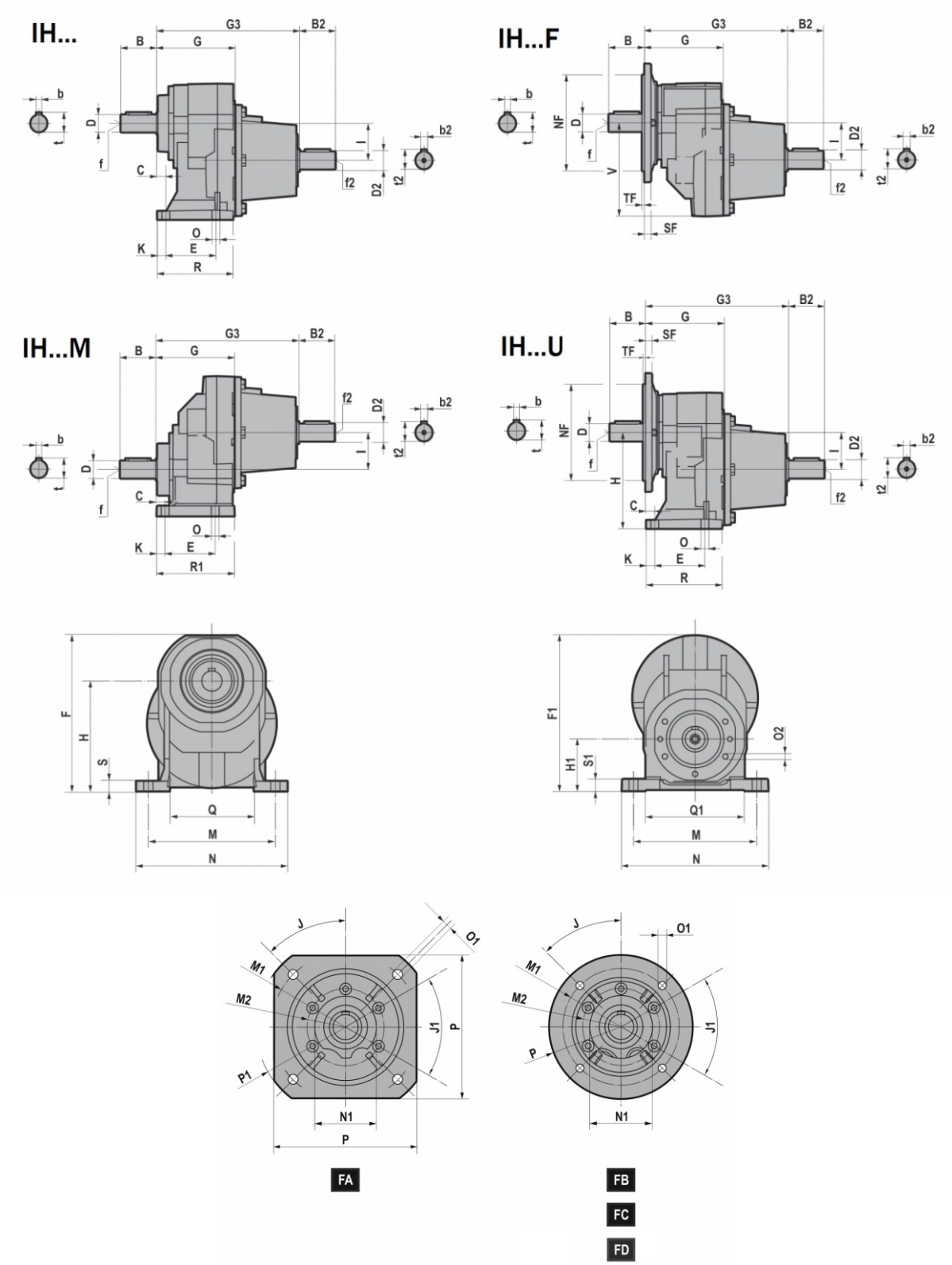
IH...
IH...F
IH...M
IH...U
B
G
G3
B2
b
t
D
f
C
O
K
E
R
R1
l
f2
D2
t2
b2
NF
V
TF
SF
H
F
S
Q
M
N
F1
H1
S1
O2
Q1
J
O1
M1
M2
P1
P
J1
N1
FA
FB
FC
FD

3.1 REDUCERS/GEARED MOTORS

IH.../F/U/M	D	B	C	E	F	F1	G	H	H1	I	K	M	N	O	O2	Q	Q1	R	R1	S	S1	~V	b	t	f
IH041	19 j6	40	13	45	168,5	168	100	120	50	42	12	105	130 125 (041M)	9	M8x17 (n.5)	74	55	86,5	98	9,5	8	118	6	21,5	M6
IH051	24 j6	50	13	70	183,5	189	110	130	63	50	12	150	178	11	M8x17 (n.5)	100	121,5	106	109	11,5	14	126	8	27	M8
IH061	28 j6	60	16	70	231	216	125	165	80	60	14	165	195	11	M8x17 (n.5)	110	135,5	120	123	15	16	136	8	31	M10
IH081	38 k6	80	25	85	277	284	135	195	100	80	23	185	230 232 (081M)	14	M10x20 (n.7)	123	151	130	135	15	20	184	10	41	M12
IH101	48 k6	110	19	130	355	377	180	252	125	100	17	240	295	18	M10x20 (n.6)	162	185,5	173	178	16	22	251,5	14	51,5	M16
IH121	55 m6	110	25	150	422	426,5	210	300	160	115	22	280	340	18	M12x25 (n.7)	183	224	202	207	19	25	266,5	16	59	M20

		J	J1	M1	M2	NF f8	N1	O1	P	P1	SF	TF
IH041F/U IH051F/U	**FA**	45	45	Ø165	Ø85	130	70	11	160	Ø200	9	3,5
	FB			Ø130	Ø85	110		9	Ø160	/	9	3,5
	FC			Ø115	Ø85	95		9	Ø140	/	9	3
	FD			Ø100	Ø85	80		M8	Ø120	/	9	3
IH061F/U	**FA**	45	45	Ø215	Ø105	180	90	14	200	Ø250	12	4
	FB			Ø165	Ø105	130		11	Ø200	/	12	3,5
IH081F/U IH101F/U	**FA**	45	45	Ø265	Ø130	230	110	14	250	Ø300	15	4
	FB			Ø215	Ø130	180		14	Ø250	/	15	4
	FC			Ø165	Ø130	130		11	Ø200	/	15	3,5
IH121F/U	**FA**	45	45	Ø300	Ø165	250	130	18	300	Ø350	16	5
	FB			Ø265	Ø165	230		14	Ø300	/	16	4
	FC			Ø 215	Ø165	180		14	Ø250	/	16	4

	G3	B2	D2	b2	t2	f2
IH041	190	40	16 j6	5	18	M6
IH051	200	50	24 j6	8	27	M8
IH061	215	50	24 j6	8	27	M8
IH081	248	60	28 j6	8	31	M10
IH101	306,5	80	38 k6	10	41	M12
IH121	336,5	80	38 k6	10	41	M12

3.1.14 H..2/3

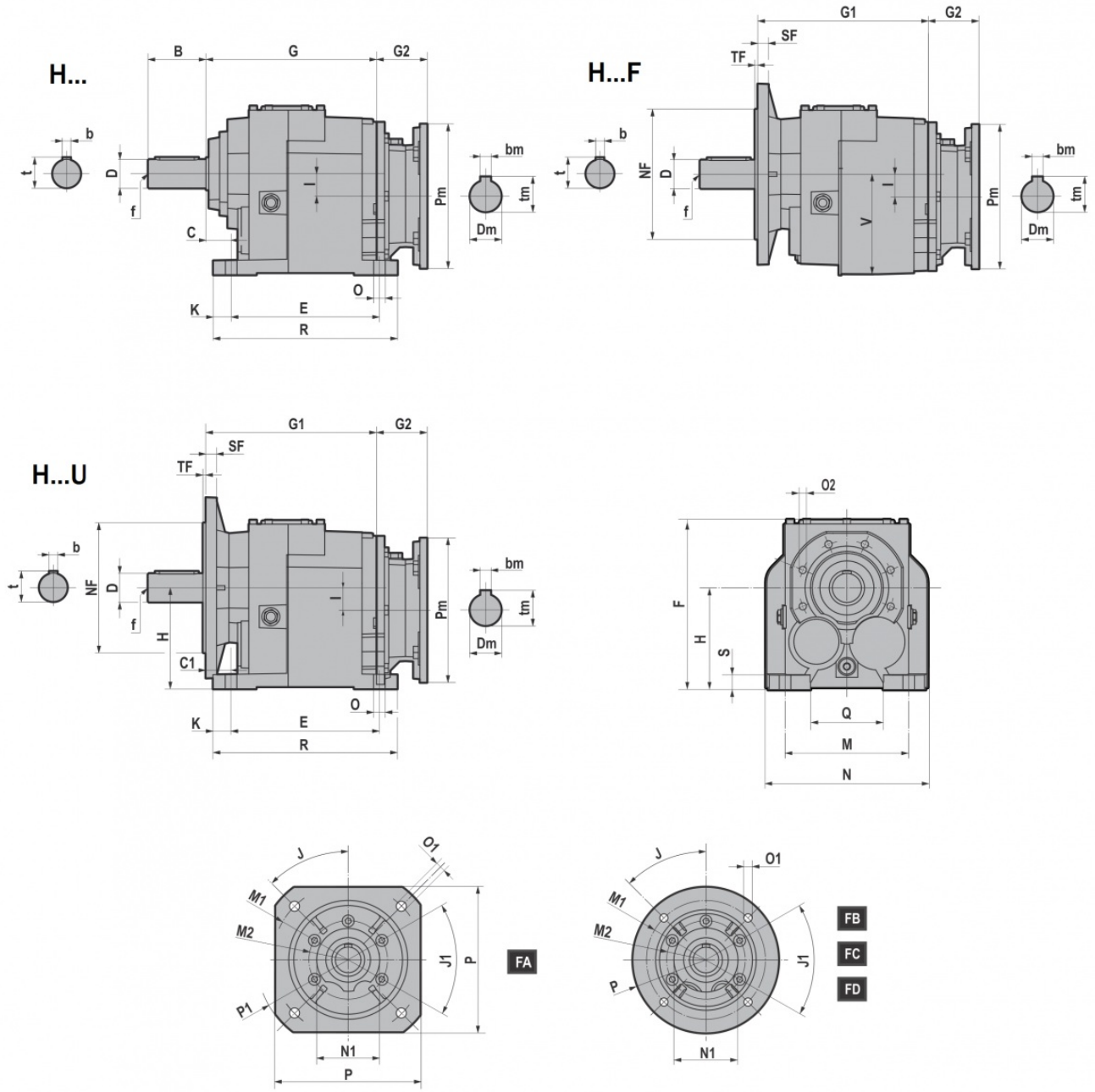

H.../F/U	D	B	b	t	f	C	C1	E	F	G	G1	H	I	K	M	N	O	O2	Q	R	S	-V
H032/H033	25 j6	50	8	28	M10	25	34	130	169	141	150	90	9,2	15	110	140	11	M8x17 (n.5)	60	160	15	92
H042/H043	30 j6	60	8	33	M10	30	30	165	189	152	152	115	18	15	135	170	14	M8x17 (n.5)	85	195	15	115
H052/H053	35 k6	70	10	38	M12	30	30	165	192	187	187	115	25,5	18	135	185	14	M8x17 (n.5)	80	201	18	116
H062/H063	40 k6	80	12	43	M16	35	35	205	234	236	236	140	31	25	170	220	16	M10x20 (n.6)	100	255	20	140
	35 k6	70	10	38	M12																	
H082/H083	50 k6	100	14	53,5	M16	40	40	260	292	272,5	272,5	180	31	27,5	215	280	18	M12x25 (n.7)	140	315	25	180
	40 k6	80	12	43	M16																	
H102/H103	60 m6	120	18	64	M20	40	40	310	364	316	316	225	35,5	27,5	250	330	22	M14x28 (n.7)	159	365	30	227
H122/H123	70 m6	140	20	74,5	M20	45	45	370	399	376,5	376,5	250	47,5	35	290	406	26	M14x30 (n.7)	185,5	440	35	253
H142/H143	90 m6	170	25	95	M20	50	50	410	490	430	430	315	45	40	340	450	26	M16x32 (n.7)	230	490	35	320

3.1 REDUCERS/GEARED MOTORS

....F/U		J	J1	M1	M2	NF f8	N1	O1	P	P1	SF	TF
H032/H033 H042/H043	FA	45	45	Ø165	Ø85	130	70	11	160	Ø200	9	3,5
	FB			Ø130	Ø85	110		9	Ø160	/	9	3,5
	FC			Ø115	Ø85	95		9	Ø140	/	9	3
	FD			Ø100	Ø85	80		M8	Ø120	/	9	3
H052/H053	FA	45	45	Ø215	Ø105	180	90	14	200	Ø250	12	4
	FB			Ø165	Ø105	130		11	Ø200	/	12	3,5
H062/H063	FA	45	45	Ø265	Ø130	230	110	14	250	Ø300	15	4
	FB			Ø215	Ø130	180		14	Ø250	/	15	4
	FC			Ø165	Ø130	130		11	Ø200	/	15	3,5
H082/H083	FA	45	45	Ø300	Ø165	250	130	18	300	Ø350	16	5
	FB			Ø265	Ø165	230		14	Ø300	/	16	4
	FC			Ø215	Ø165	180		14	Ø250	/	16	4
H102/H103	FA	45	45	Ø350	Ø185	300	150	18	350	Ø400	18	5
	FB			Ø300	Ø185	250		18	Ø350	/	18	5
	FC			Ø265	Ø185	230		14	Ø300	/	18	4
H122/H123	FB	45	45	Ø350	Ø200	300	170	18	Ø400	/	18	5
H142/H143	FB	22,5	45	Ø400	Ø245	350	210	18	Ø450	/	25	5
	FC	45		Ø350	Ø245	300		18	Ø400	/	25	5

		G2 H.../F/U			
IEC	Pm x Dm	H032/H033 H042/H043 H052/H053	H062/H063 H082/H083	H102/H103 H122/H123	H142/H143
063	140x11	57,0	/	/	/
071	160x14	69,0	49,0	/	/
080	200x19	90,0	70,0	60,5	/
090	200x24	90,0	70,0	60,5	/
100-112	250x28	105,0	85,0	75,5	/
132	300x38	/	110,0	100,5	76,0
160	350x42	/	157,5	148,0	123,5
180	350x48	/	157,5	148,0	123,5
200	400x55	/	/	185,0	160,5
225	450x60	/	/	/	160,5

B5	Pm	Dm	bm	tm
063	140	11	4	12,8
071	160	14	5	16,3
080	200	19	6	21,8
090	200	24	8	27,3
100	250	28	8	31,3
112	250	28	8	31,3
132	300	38	10	41,3
160	350	42	12	45,3
180	350	48	14	51,8
200	400	55	16	59,3
225	450	60	18	64,4

3.1.15 CH..2/3

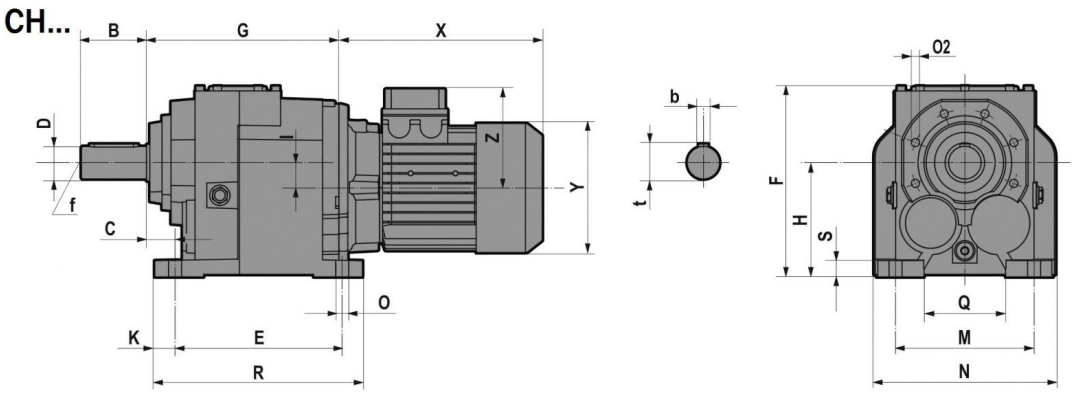

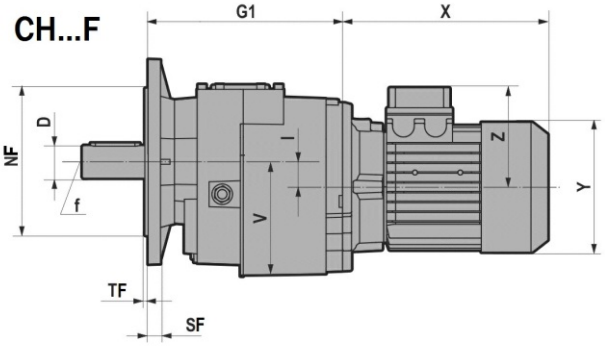

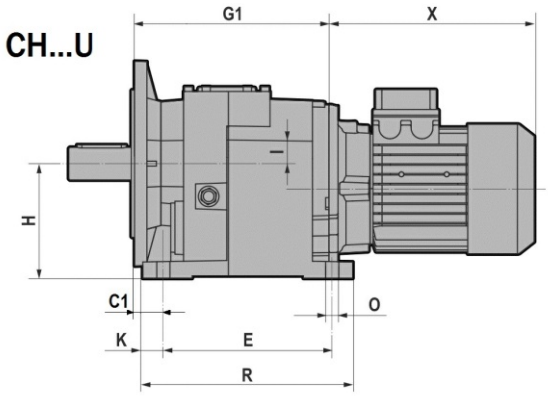

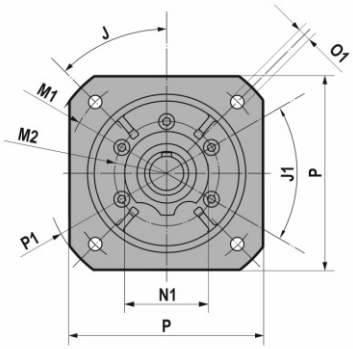

FA

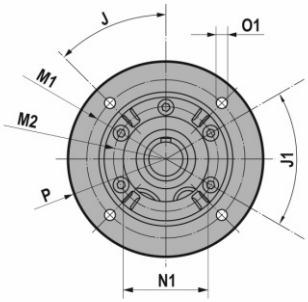

FB

FC

FD

3.1 REDUCERS/GEARED MOTORS

CH.../F/U	D	B	b	t	f	C	C1	E	F	G	G1	H	I	K	M	N	O	O2	Q	R	S	-V
CH032/CH033	25 j6	50	8	28	M10	25	34	130	169	141	150	90	9,2	15	110	140	11	M8x17 (n.5)	60	160	15	92
CH042/CH043	30 j6	60	8	33	M10	30	30	165	189	152	152	115	18	15	135	170	14	M8x17 (n.5)	85	195	15	115
CH052/CH053	35 k6	70	10	38	M12	30	30	165	192	187	187	115	25,5	18	135	185	14	M8x17 (n.5)	80	201	18	116
CH062/CH063	40 k6	80	12	43	M16	35	35	205	234	236	236	140	31	25	170	220	16	M10x20 (n.6)	100	255	20	140
	35 k6	70	10	38	M12																	
CH082/CH083	50 k6	100	14	53,5	M16	40	40	260	292	272,5	272,5	180	31	27,5	215	280	18	M12x25 (n.7)	140	315	25	180
	40 k6	80	12	43	M16																	
CH102/CH103	60 m6	120	18	64	M20	40	40	310	364	316	316	225	35,5	27,5	250	330	22	M14x28 (n.7)	159	365	30	227
CH122/CH123	70 m6	140	20	74,5	M20	45	45	370	399	376,5	376,5	250	47,5	35	290	406	26	M14x30 (n.7)	185,5	440	35	253
CH142/CH143	90 m6	170	25	95	M20	50	50	410	490	430	430	315	45	40	340	450	26	M16x32 (n.7)	230	490	35	320

....F/U		J	J1	M1	M2	NF f8	N1	O1	P	P1	SF	TF
CH032/CH033 CH042/CH043	FA	45	45	Ø165	Ø85	130	70	11	160	Ø200	9	3,5
	FB			Ø130	Ø85	110		9	Ø160	/	9	3,5
	FC			Ø115	Ø85	95		9	Ø140	/	9	3
	FD			Ø100	Ø85	80		M8	Ø120	/	9	3
CH052/CH053	FA	45	45	Ø215	Ø105	180	90	14	200	Ø250	12	4
	FB			Ø165	Ø105	130		11	Ø200	/	12	3,5
CH062/CH063	FA	45	45	Ø265	Ø130	230	110	14	250	Ø300	15	4
	FB			Ø215	Ø130	180		14	Ø250	/	15	4
	FC			Ø165	Ø130	130		11	Ø200	/	15	3,5
CH082/CH083	FA	45	45	Ø300	Ø165	250	130	18	300	Ø350	16	5
	FB			Ø265	Ø165	230		14	Ø300	/	16	4
	FC			Ø215	Ø165	180		14	Ø250	/	16	4
CH102/CH103	FA	45	45	Ø350	Ø185	300	150	18	350	Ø400	18	5
	FB			Ø300	Ø185	250		18	Ø350	/	18	5
	FC			Ø265	Ø185	230		14	Ø300	/	18	4
CH122/CH123	FB	45	45	Ø350	Ø200	300	170	18	Ø400	/	18	5
CH142/CH143	FB	22,5	45	Ø400	Ø245	350	210	18	Ø450	/	25	5
	FC	45		Ø350	Ø245	300		18	Ø400	/	25	5

T (IE1 - IE2)										
CH.../F/U		063	071	080	090S	090L	100	112	132S	132M/L
CH032/CH033 CH042/CH043 CH052/CH053	X	215	241	268	296	321	333	351	/	/
	Y	121	139	158	173	173	191	211	/	/
	Z	104	112	122	130	130	139	154	/	/
CH062/CH063 CH082/CH083	X	/	221	248	276	301	335	356	405	443
	Y	/	139	158	173	173	191	211	249	249
	Z	/	112	122	130	130	139	154	194	194
CH102/CH103 CH122/CH123	X	/	/	/	267	292	326	347	396	434
	Y	/	/	/	173	173	191	211	249	249
	Z	/	/	/	130	130	139	154	194	194

TB (IE1 - IE2)										
CH.../F/U		063	071	080	090S	090L	100	112	132S	132M/L
CH032/CH033 CH042/CH043 CH052/CH053	X	273	306.5	341	373	398	415	448	/	/
	Y	121	139	158	173	173	191	211	/	/
	Z	119	129	137	157	157	168	183	/	/
CH062/CH063 CH082/CH083	X	/	286.5	321	353	378	417	453	505	547
	Y	/	139	158	173	173	191	211	249	249
	Z	/	129	137	157	157	168	183	230	230
CH102/CH103 CH122/CH123	X	/	/	/	343	368	407	443	495	537
	Y	/	/	/	173	173	191	211	249	249
	Z	/	/	/	157	157	168	183	230	230

3.1.16 IH..2/3

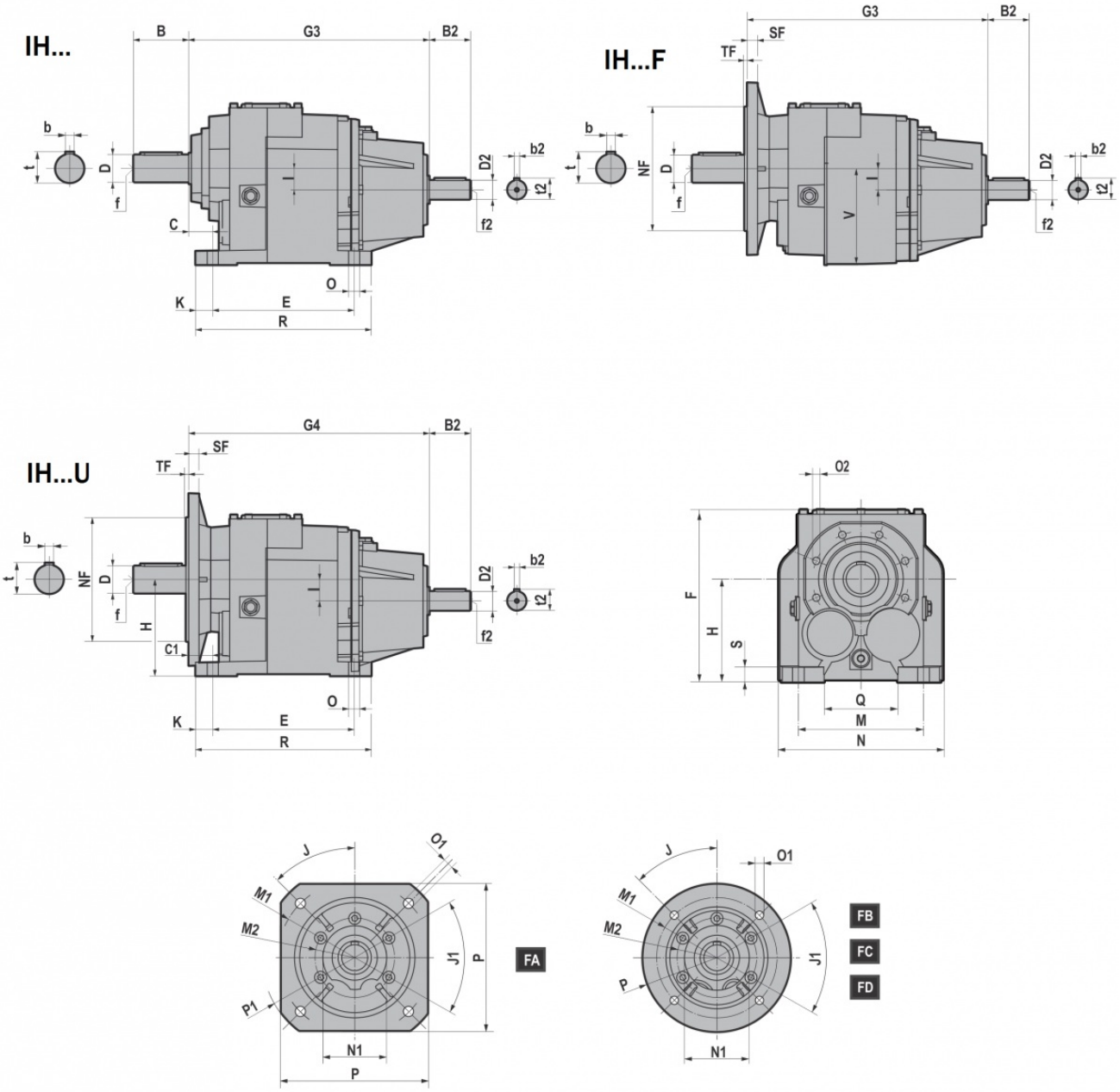

IH.../F/U	D	B	b	t	f	C	C1	E	F	G	G1	H	I	K	M	N	O	O2	Q	R	S	-V
IH032/IH033	25 j6	50	8	28	M10	25	34	130	169	141	150	90	9,2	15	110	140	11	M8x17 (n.5)	60	160	15	92
IH042/IH043	30 j6	60	8	33	M10	30	30	165	189	152	152	115	18	15	135	170	14	M8x17 (n.5)	85	195	15	115
IH052/IH053	35 k6	70	10	38	M12	30	30	165	192	187	187	115	25,5	18	135	185	14	M8x17 (n.5)	80	201	18	116
IH062/IH063	40 k6	80	12	43	M16	35	35	205	234	236	236	140	31	25	170	220	16	M10x20 (n.6)	100	255	20	140
	35 k6	70	10	38	M12																	
IH082/IH083	50 k6	100	14	53,5	M16	40	40	260	292	272,5	272,5	180	31	27,5	215	280	18	M12x25 (n.7)	140	315	25	180
	40 k6	80	12	43	M16																	
IH102/IH103	60 m6	120	18	64	M20	40	40	310	364	316	316	225	35,5	27,5	250	330	22	M14x28 (n.7)	159	365	30	227
IH122/IH123	70 m6	140	20	74,5	M20	45	45	370	399	376,5	376,5	250	47,5	35	290	406	26	M14x30 (n.7)	185,5	440	35	253
IH142/IH143	90 m6	170	25	95	M20	50	50	410	490	430	430	315	45	40	340	450	26	M16x32 (n.7)	230	490	35	320

3.1 REDUCERS/GEARED MOTORS

....F/U		J	J1	M1	M2	NF f8	N1	O1	P	P1	SF	TF
IH032/IH033 IH042/IH043	FA	45	45	Ø165	Ø85	130	70	11	160	Ø200	9	3,5
	FB			Ø130	Ø85	110		9	Ø160	/	9	3,5
	FC			Ø115	Ø85	95		9	Ø140	/	9	3
	FD			Ø100	Ø85	80		M8	Ø120	/	9	3
IH052/IH053	FA	45	45	Ø215	Ø105	180	90	14	200	Ø250	12	4
	FB			Ø165	Ø105	130		11	Ø200	/	12	3,5
IH062/IH063	FA	45	45	Ø265	Ø130	230	110	14	250	Ø300	15	4
	FB			Ø215	Ø130	180		14	Ø250	/	15	4
	FC			Ø165	Ø130	130		11	Ø200	/	15	3,5
IH082/IH083	FA	45	45	Ø300	Ø165	250	130	18	300	Ø350	16	5
	FB			Ø265	Ø165	230		14	Ø300	/	16	4
	FC			Ø215	Ø165	180		14	Ø250	/	16	4
IH102/IH103	FA	45	45	Ø350	Ø185	300	150	18	350	Ø400	18	5
	FB			Ø300	Ø185	250		18	Ø350	/	18	5
	FC			Ø265	Ø185	230		14	Ø300	/	18	4
IH122/IH123	FB	45	45	Ø350	Ø200	300	170	18	Ø400	/	18	5
IH142/IH143	FB	22,5	45	Ø400	Ø245	350	210	18	Ø450	/	25	5
	FC	45		Ø350	Ø245	300		18	Ø400	/	25	5

IH.../F/U	G3	G4	B2	D2	b2	t2	f2
IH032/IH033	231	240	50	24 j6	8	27	M8
IH042/IH043	242	242	50	24 j6	8	27	M8
IH052/IH053	277	277	50	24 j6	8	27	M8
IH062/IH063	349	349	60	28 j6	8	31	M10
IH082/IH083	385,5	385,5	60	28 j6	8	31	M10
IH102/IH103	442,5	442,5	80	38 k6	10	41	M12
IH122/IH123	503	503	80	38 k6	10	41	M12
IH142/IH143	570	570	110	42 k6	12	45	M16

3.2.1 Electric motors

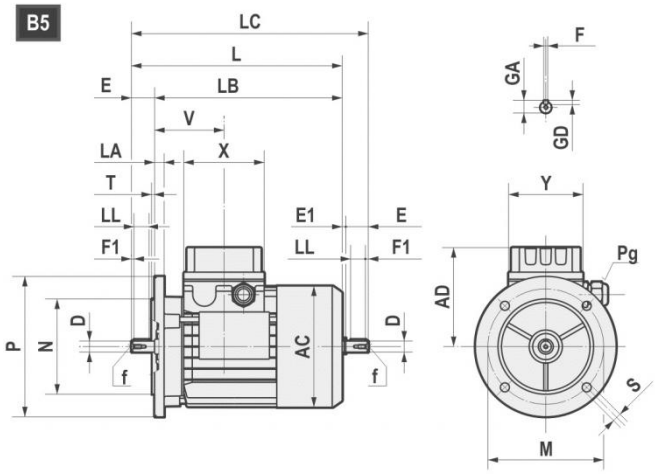

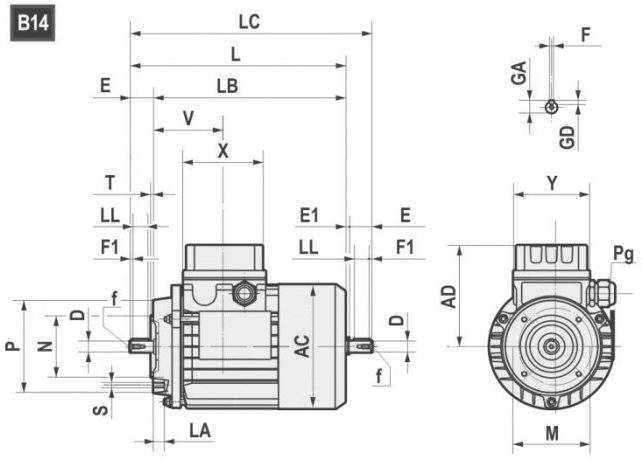

	AC	AD	L	LB	LC	X	Y	V	D	E	E1	f	F1	GA	F	GD
063	121	104	211	188	235,5	80	74	69	11 j6	23	1,5	M4x10	2,5	12,5	4	4
071	139	112	238,5	208,5	271	80	74	74,5	14 j6	30	2,5	M5x12.5	3	16	5	5
080	158	122	272,5 *(296)	232,5 *(256)	314 *(337)	80	74	78	19 j6	40	1,5	M6x16	5	21,5	6	6
90S	173	146	298 *(331)	248 *(281)	349,5 *(381)	98	98	89,5	24 j6	50	1,5	M8x19	5	27	8	7
90L	173	146	323 *(356)	273 *(306)	374,5 *(408)	98	98	89,5	24 j6	50	1,5	M8x19	5	27	8	7
100	191	155	368	308	431,5	98	98	97,5	28 j6	60	3,5	M10x22	7,5	31	8	7
112	211	170	382,5 *(408)	322,5 *(348)	447 *(472)	98	98	100	28 j6	60	3,5	M10x22	7,5	31	8	7
132S	249	195	452	372	536,5	118	118	115,5	38 k6	80	4	M12x28	10	41	10	8
132L	249	195	490	410	574,5	118	118	115,5	38 k6	80	4	M12x28	10	41	10	8
160S	249	195	520	410	/	118	118	115,5	42k6	100	/	M16x36	10	45	12	8

*TP80B4,TP90S4, TP90L4, TP90S6, TP112M4, TP112M6

B5	M	N	P	LA	S	T
063	115	95	140	10	9	3
071	130	110	160	10	9,5	3,5
080	165	130	200	12	11	3,5
090	165	130	200	12	11	3,5
100	215	180	250	15	14	4
112	215	180	250	14,5	14	4
132	265	230	300	20	14	3,5
160	300	250	350	13	18,5	3,5

B14	M	N	P	LA	S	T
063	75	60	90	10	M5	2,5
071	85	70	105	10,5	M6	2,5
080	100	80	120	10,5	M6	3
090	115	95	140	11,5	M8	3
100	130	110	160	15	M8	3,5
112	130	110	160	11,5	M8	3,5
132	165	130	200	20,5	M10	3,5
160	215	180	250	-	M12	4

3.2 ELECTRIC MOTORS

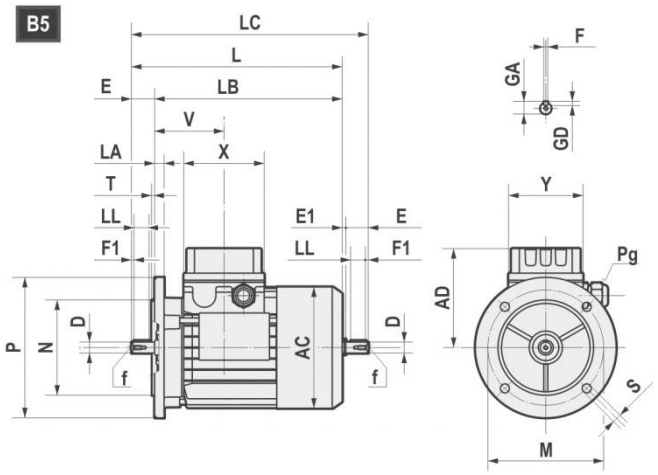

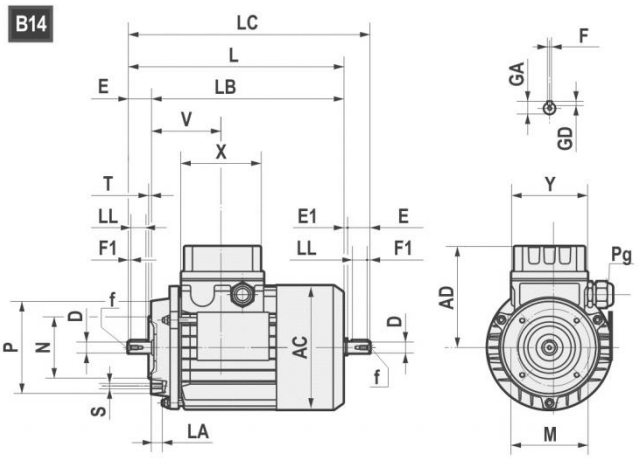

		AC	AD	L	LB	X	D	E	f	GA	F	GD	LL	Pg	
160M	2-4-6	314	251	600	490	158	42	110	M16	45	12	8	90	2-M40x1,5	1-M16x1,5
160L	2-4-6	314	251	645	535	158	42	110	M16	45	12	8	90	2-M40x1,5	1-M16x1,5
180M	2-4	355	267	680	570	158	48	110	M16	51,5	14	9	100	2-M40x1,5	1-M16x1,5
180L	4-6	355	267	720	610	158	48	110	M16	51,5	14	9	100	2-M40x1,5	1-M16x1,5
200L	2-4-6	397	300	785	675	187	55	110	M20	59	16	10	100	2-M50x1,5	1-M16x1,5
225S	4	446	325	820	680	187	60	140	M20	64	18	11	125	2-M50x1,5	1-M16x1,5
225M	2	446	325	815	705	187	55	110	M20	59	16	10	100	2-M50x1,5	1-M16x1,5
225M	4-6	446	325	845	705	187	60	140	M20	64	18	11	125	2-M50x1,5	1-M16x1,5
250M	2-4-6	485	360	910	770	238	60	140	M20	64	18	11	125	2-M63x1,5	1-M16x1,5
250M	2-4-6	485	360	910	770	238	65	140	M20	69	18	11	125	2-M63x1,5	1-M16x1,5
280S	2-4-6	547	390	970	830	238	65	140	M20	69	18	11	125	2-M63x1,5	1-M16x1,5
280S	2-4-6	547	390	970	830	238	75	140	M20	79,5	20	12	125	2-M63x1,5	1-M16x1,5
280M	2-4-6	547	390	1025	885	238	65	140	M20	69	18	11	125	2-M63x1,5	1-M16x1,5
280M	2-4-6	547	390	1025	885	238	75	140	M20	79,5	20	12	125	2-M63x1,5	1-M16x1,5

B5	M	N	P	LA	S	T
160	300	250	350	13	19	5
180	300	250	350	15	19	5
200	350	300	400	17	19	5
225	400	350	450	20	19	5
250	500	450	550	22	19	5
280	500	450	550	22	19	5

3.2.2 Standard high efficiency (TS), high (TH) and premium (TP) motors

Motovario, three-phase, single polarity motors are available in three different versions (IE1-IE2-IE3) in compliance with standard 60034-30-1 (see table). The efficiency value is calculated according to the method set forth in standard IEC 60034-2-1.

1. IE1: Standard efficiency TS series.
2. IE2: High efficiency TH series
3. IE3: Premium efficiency TP series.

Table of Motovario commercial availability

		EFFICIENCY LEVEL		
NOMINAL POWER [kW]	POLES	IE1	IE2	IE3
0,09 ≤ Pn < 0,75	2 - 4 - 6	TS-TBS	-	-
0,75 ≤ Pn ≤ 11	2 - 4	TBS	-	-
0,75 ≤ Pn ≤ 5,5	6	TBS	TH-TBH	TP-TBP
0,75 ≤ Pn ≤ 9,2	2 - 4	-	TH-TBH	-
0,75 ≤ Pn ≤ 7,5	2 - 4	-	-	TP-TBP
11 ≤ Pn ≤ 37	2	TBS (*)	-	TP
11 ≤ Pn ≤ 55	4	TBS (*)	-	-
11 ≤ Pn ≤ 90	4	-	-	TP
7,5 ≤ Pn ≤ 22	6	TBS (*)	-	TP

(*) Series available on request.

3.2.3 Nominal power - [kW]

	63A	63B	63C	71A	71B	71C	80A			80B		
Poles	TS	TS	TS	TS	TS	TS	TS	TH	TP	TS	TH	TP
2	0,18	0,25	0,37	0,37	0,55	-	-	0,75	0,75	-	1,1	1,1
4	0,12	0,18	0,22	0,25	0,37	0,55	0,55	-	-	-	0,75	0,75
6	0,09	0,12	0,15	0,18	0,25	0,37	0,37	-	-	0,55	-	-

	90S		90L		100LR	100L	100LA		112MR	112MS	112MA	112M
Poles	TH	TP	TH	TP	TP	TP	TH	TP	TP	TP	TH	TP
2	1,5	1,5	2,2	2,2	-	3	3	-	-	-	4	4
4	1,1	1,1	1,5	1,5	-	-	2,2	2,2	2,2	3	4	4
6	-	0,75	0,75	-	1,1	1,5	1,1	-	-	-	2,2	2,2

	112MR	112MS	132S	132SA	132MS	132SB	132M	132MA		132MB	
Poles	TP	TP	TP	TH	TP	TH	TP	TH	TP	TH	TP
2	-	-	5,5	5,5	-	7,5	7,5	9,2	-	-	-
4	2,2	3	-	5,5	5,5	-	7,5	7,5	-	-	-
6	-	-	3	3	-	-	-	4	4	5,5	5,5

	160M	160MA	160MB	160L	160LA	180M	180L
Poles	TP	TP	TP	TP	TP	TP	TP
2	-	11	15	18,5	-	22	-
4	-	11	-	-	15	18,5	22
6	7,5	-	-	11	-	-	15

	200L	200LA	200LB	225S	225M	250M	280S	280M
Poles	TP	TP	TP	TP	TP	TP	TP	TP
2	-	30	37	-	-	-	-	-
4	30	-	-	37	45	55	75	90
6	-	18,5	22	-	-	-	-	-

3.3 WEIGHT

The values reported in the tables are referred to the weight of the gearbox with lubricant excluded.

* H-PH	063	071	080-090	100-112	132	160-180	200	225	
A31	1,9	2,0	2,2	/	/	/	/	/	~ kg
A32	4,2	4,3	4,6	/	/	/	/	/	
A33	4,0	4,1	5,2	/	/	/	/	/	
A41	3,1	3,2	3,5	/	/	/	/	/	
A42	5,2	5,3	5,5	/	/	/	/	/	
A43	5,8	5,9	6,1	/	/	/	/	/	
A51	4,2	4,3	4,5	/	/	/	/	/	
A52	/	/	9,5	13,0	/	/	/	/	
A53	9,9	10,0	10,2	/	/	/	/	/	
A61	/	/	6,6	7,0	/	/	/	/	
A62	/	/	11,3	14,8	/	/	/	/	
A63	12,5	12,6	13,2	/	/	/	/	/	
032-033	8,4	8,8	9,4	13,7	/	/	/	/	
042-043	10,9	11,3	11,9	16,2	/	/	/	/	
041	/	4,8	5,4	/	/	/	/	/	
052-053	16,0	16,4	17,0	21,3	/	/	/	/	
051	/	6,7	7,3	11,6	/	/	/	/	
062-063	/	27,0	29,1	31,2	33,9	/	/	/	
061	/	/	9,3	13,6	/	/	/	/	
082-083	/	/	49,1	51,2	53,2	60,5	/	/	
081	/	/	19,3	21,3	23,9	/	/	/	
102-103	/	/	77,6	79,9	82,7	88,7	/	/	
101	/	/	/	32,7	35,5	41,5	/	/	
121	/	/	/	/	36,8	42,8	57,8	/	
122-123	/	/	/	109,5	112,3	118,3	133,3	/	
142-143	/	/	/	/	177,0	184,9	199,1	200,9	

IH	~ kg
A32	4,3
A33	5,0
A41	3,3
A42	5,2
A43	5,8
A51	4,2
A52	9,4
A53	9,9
A61	6,5
A62	11,2
A63	12,9
032-033	11,5
042-043	14,0
041	7,5
052-053	19,1
051	9,4
062-063	33,1
061	11,4
082-083	53,1
081	23,2
102-103	87,5
101	40,3
121	41,6
122-123	117,1
142-143	192,1

3.3 WEIGHT

*Weight without motor

	TS									
CH	063	071	080	090S	090L	100	112	132S	132M	
A32	6,9	8,7	12,7	/	/	/	/	/	/	~ kg
A33	7,6	9,5	13,5	/	/	/	/	/	/	
A41	5,9	7,8	11,8	/	/	/	/	/	/	
A42	7,8	9,7	13,7	15,6	18,1	/	/	/	/	
A43	8,4	10,3	14,3	16,2	18,7	/	/	/	/	
A51	6,2	8,1	12,1	14,0	16,5	/	/	/	/	
A52	/	/	17,2	19,1	21,6	26,2	36,5	/	/	
A53	12,0	13,9	17,9	19,8	22,3	/	/	/	/	
A61	/	/	14,3	16,2	18,7	23,3	33,6	/	/	
A62	/	/	19,2	21,1	23,6	28,2	38,5	/	/	
A63	14,6	16,5	20,5	22,4	24,9	/	/	/	/	
032-033	11,9	12,8	17,5	21,4	23,4	28,9	40,4	/	/	
042-043	14,4	15,3	20,0	23,9	25,9	31,4	42,9	/	/	
041	/	8,8	13,5	17,4	19,4	/	/	/	/	
052-053	19,5	20,4	25,1	29,0	31,0	36,5	48,0	/	/	
051	/	10,7	15,4	19,3	21,3	26,8	38,3	/	/	
062-063	/	32,7	37,8	40,2	41,7	46,8	58,2	72,2	83,8	
061	/	/	17,4	21,3	23,3	28,8	40,3	/	/	
082-083	/	/	59,7	62,1	63,6	68,7	80,1	94,1	105,7	
081	/	/	27,1	29,5	31	36,1	47,5	61,5	73,1	
102-103	/	/	/	93,8	94,8	100,8	110,8	125,8	134,8	
101	/	/	/	/	/	49,6	59,6	74,6	83,6	
121	/	/	/	/	/	/	/	77	86	
122-123	/	/	/	/	/	134,5	144,5	159,5	168,5	

	TH							
CH	080	090S	090L	100	112	132S	132M	
A32	14,4	/	/	/	/	/	/	~ kg
A33	15,2	/	/	/	/	/	/	
A41	13,5	/	/	/	/	/	/	
A42	15,4	17,9	20	/	/	/	/	
A43	16,0	18,5	20,6	/	/	/	/	
A51	13,8	16,3	18,4	/	/	/	/	
A52	18,9	21,5	23,6	28,5	39,6	/	/	
A53	19,6	22,1	24,3	/	/	/	/	
A61	16,0	18,6	20,7	25,6	36,7	/	/	
A62	20,9	23,4	25,6	30,5	41,6	/	/	
A63	22,1	24,7	26,8	/	/	/	/	
032-033	19,2	23,7	25,3	31,2	43,5	/	/	
042-043	21,7	26,3	27,9	33,8	46	/	/	
041	15,2	19,7	21,3	/	/	/	/	
052-053	26,8	31,4	33	38,9	51,1	/	/	
051	17,1	21,6	23,2	29,1	41,4	/	/	
062-063	39,5	42,5	43,7	49,1	61,3	77,5	90,6	
061	19,1	23,6	25,2	31,1	43,4	/	/	
082-083	61,4	64,4	65,6	71	83,2	99,4	112,5	
081	28,8	31,8	33	38,4	50,6	66,8	79,9	
102-103	/	96,1	96,8	103,1	113,9	131,1	141,6	
101	/	/	/	51,9	62,7	79,9	90,4	
121	/	/	/	/	/	82,3	92,8	
122-123	/	/	/	136,8	147,6	164,8	175,3	

	TBS									
CH	063	071	080	090S	090L	100	112	132S	132M	
A32	8,2	10,6	15,8	/	/	/	/	/	/	~ kg
A33	8,9	11,4	16,6	/	/	/	/	/	/	
A41	7,2	9,7	14,9	/	/	/	/	/	/	
A42	9,1	11,6	16,8	20,5	23,0	/	/	/	/	
A43	9,7	12,2	17,4	21,1	23,6	/	/	/	/	
A51	7,5	10	15,2	18,9	21,4	/	/	/	/	
A52	/	/	20,3	24,3	26,5	31,1	44,8	/	/	
A53	13,3	15,8	21	24,7	27,2	/	/	/	/	
A61	/	/	17,4	21,1	23,6	28,2	41,9	/	/	
A62	/	/	22,3	26	28,5	33,1	46,8	/	/	
A63	15,9	18,4	23,6	27,3	29,8	/	/	/	/	
032-033	13,4	15	21	26,9	28,9	34,4	50,1	/	/	
042-043	15,9	17,5	23,5	29,4	31,4	36,9	52,6	/	/	
041	/	11	17	22,9	24,9	/	/	/	/	
052-053	21,0	22,6	28,6	34,5	36,5	42	57,7	/	/	
051	/	12,9	18,9	24,8	26,8	32,3	48	/	/	
062-063	/	34,9	41,3	45,7	47,2	52,3	67,9	82,5	98,5	
061	/	/	20,9	26,8	28,8	34,3	50	/	/	
082-083	/	/	63,2	67,6	69,1	74,2	89,8	104,4	120,4	
081	/	/	30,6	35	36,5	41,6	57,2	71,8	87,8	
102-103	/	/	/	99,4	100,4	106,4	120,6	136,2	149,6	
101	/	/	/	/	/	55	69,3	85	98,3	
121	/	/	/	/	/	/	/	87,3	100,7	
122-123	/	/	/	/	/	140	154,2	169,8	183,2	

	TBH							
CH	080	090S	090L	100	112	132S	132M	
A32	17,5	/	/	/	/	/	/	~ kg
A33	18,3	/	/	/	/	/	/	
A41	16,6	/	/	/	/	/	/	
A42	18,5	22,8	25,0	/	/	/	/	
A43	19,1	23,4	25,6	/	/	/	/	
A51	16,9	21,2	23,4	/	/	/	/	
A52	22	26,6	28,5	34,8	47,9	/	/	
A53	22,7	27	29,2	/	/	/	/	
A61	19,1	23,4	25,6	31,9	45	/	/	
A62	24	28,3	30,5	36,8	49,9	/	/	
A63	25,3	29,6	31,8	/	/	/	/	
032-033	22,7	29,2	30,9	38,1	53,2	/	/	
042-043	25,2	31,7	33,4	40,6	55,7	/	/	
041	18,6	25,2	26,9	/	/	/	/	
052-053	30,3	36,9	38,6	45,8	60,9	/	/	
051	20,6	27,1	28,8	36	51,1	/	/	
062-063	43	48	49,2	56	71	87,8	105	
061	22,6	29,1	30,8	38	53,1	/	/	
082-083	64,9	69,9	71,1	77,9	92,9	109,7	126,9	
081	32,3	37,3	38,5	45,3	60,3	77,1	94,3	
102-103	/	101,7	102,4	110,1	123,7	141,5	156,1	
101	/	/	/	58,7	72,4	90,3	104,8	
121	/	/	/	/	/	92,6	107,2	
122-123	/	/	/	143,7	157,3	175,1	189,7	

3.4 END SHAFT

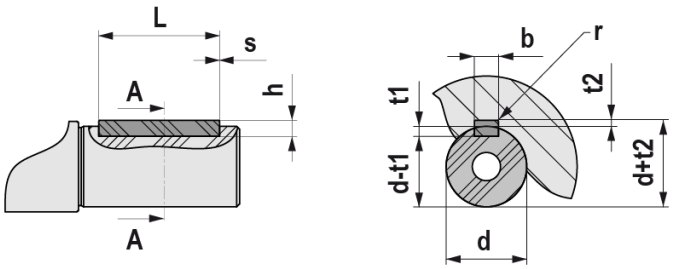

UNI 6604 - DIN 6885															
d			b x h			Tol. b / h	L		s min / max	b	t1	t2	Tol. t1 / t2	r max
	6	8	2	×	2	h9 / h9	6	20	0,16 0,25	2	1,2	1	0,1 0	0,08 0,16
>	8	10	3	×	3		6	36		3	1,8	1,4		
>	10	12	4	×	4		8	45		4	2,5	1,8		
>	12	17	5	×	5		10	56	0,25 0,4	5	3	2,3		0,16 0,25
>	17	22	6	×	6		14	70		6	3	2,8		
>	22	30	8	×	7	h9 / h11	18	90		8	4	3,3	0,2 0	
>	30	38	10	×	8		22	110	0,4 0,6	10	5	3,3		0,25 0,4
>	38	44	12	×	8		28	140		12	5	3,3		
>	44	50	14	×	9		36	160		14	5,5	3,8		
>	50	58	16	×	10		45	180		16	6	4,3		
>	58	65	18	×	11		50	200		18	7	4,4		
>	65	75	20	×	12		56	110	0,6 0,8	20	7,5	4,9		0,4 0,6
>	75	85	22	×	14		63	140		22	9	5,4		
>	85	95	25	×	14		70	160		25	9	5,4		
>	95	110	28	×	16		80	180		28	10	6,4		
>	110	130	32	×	18		90	200		32	11	7,4		
>	130	150	36	×	20		100	160	1 1,2	36	12	8,4	0,3 0	0,7 1
>	150	170	40	×	22		110	180		40	13	9,4		
>	170	200	45	×	25		125	200		45	14	10,4		

4.1 BACKSTOP DEVICE

The gear reducer can be supplied with backstop device on input shaft. Backstop device allows output shaft rotation in only one sense of direction; according to the size, it is available in the input flange or in the motor with the same dimensions. It is important to specify the required sense of direction on the order. It is device is not available for mounting position V1/V5 with motor size IEC 100...225.

Certified accessory for ATEX 3G/3D, only.

SENSE OF DIRECTION AVAILABLE

H... 1 - **H...** 1F - **H...** 1U - **H...** M - **H...** 3 - **H...** 3F - **H...** 3U

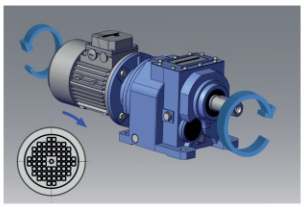

CLOCKWISE SENSE OF DIRECTION
REFERRED TO HIGH SPEED SHAFT

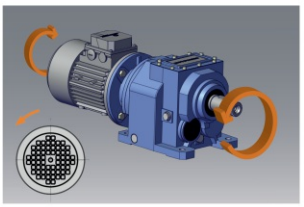

COUNTER CLOCKWISE SENSE OF DIRECTION
REFERRED TO HIGH SPEED SHAFT

H... 2 - **H...** 2F - **H...** 2U

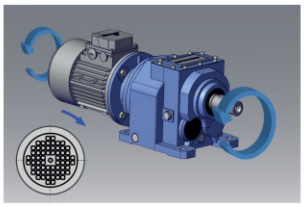

CLOCKWISE SENSE OF DIRECTION
REFERRED TO HIGH SPEED SHAFT

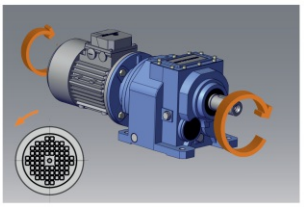

COUNTER CLOCKWISE SENSE OF DIRECTION
REFERRED TO HIGH SPEED SHAFT

	063	071	080	090	100-112	132	160	180	200	225
	140x11	160x14	200x19	200x24	250x28	300x38	350x42	350x48	400x55	450x60
H032		B5	B5	B5	B5					
H033	B5	B5	B5	B5						
H041		B5	B5	B5						
H042		B5	B5	B5	B5					
H043	B5	B5	B5	B5						
H051		B5	B5	B5	B5					
H052		B5	B5	B5	B5					
H053	B5	B5	B5	B5						
H061			B5	B5	B5					
H062			B5	B5	B5	B5				
H063		B5	B5	B5	B5					
H081			B5	B5	B5	B5				
H082			B5	B5	B5	B5	B5			
H083			B5	B5	B5	B5				
H101					B5	B5	B5	B5		
H102					B5	B5	B5	B5		
H103				B5	B5	B5	B5			
H121						B5	B5	B5	B5	
H122						B5	B5	B5	B5	
H123					B5	B5	B5	B5	B5	
H142							B5	B5	B5	B5
H143						B5	B5	B5	B5	

4.2 REINFORCED OIL SEALS FOR OUTPUT SHAFT

The reinforced seal can be done depending on the gearbox size by means of two oil seals or through the standard oil seal with VRM ring. The difference of the two solutions is explained on the drawings.
The helical gear reducers from size 060 to size 140 (except for single stage) in V1/ V5 mounting position, are already equipped with 2 oil seals as standard.
On request the gear reducer can be supplied with fluoroelastomer FPM (FKM) seals.

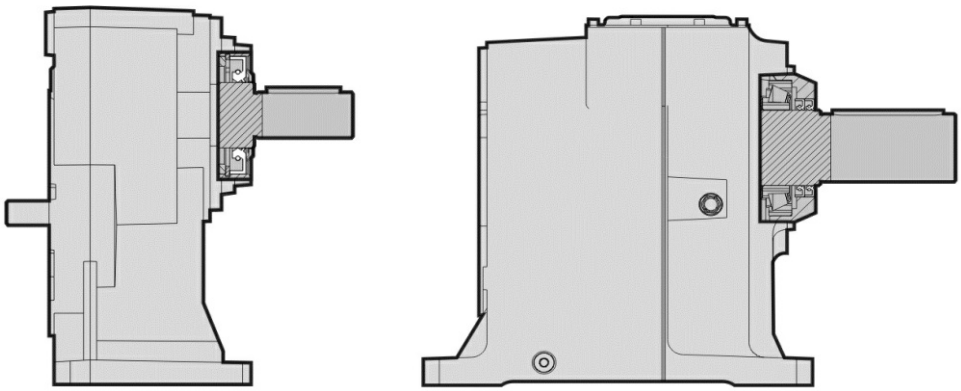

	Double oil seal	VRM ring
H041		x
H051		x
H061		x
H081		x
H101		x
H121		x
H032/3		x
H042/3		x
H052/3		x
H062/3	x	
H082/3	x	
H102/3	x	
H122/3	x	
H142/3	x	

5.1 H/HA GEARED MOTORS (50Hz)

If “Ex” mark is present, contact MOTOVARIO TECHNICAL SERVICE.

0.09 kW

n2 [rpm]	M2 [Nm]	fs	i	Gear reducer	Motor	Fr2 [N]
136.5	6	3.9	6.30	HA31	63A6	972
109.2	8	3.0	7.88	HA31	63A6	1047
109.2	8	3.4	7.88	HA41	63A6	1058
79.4	11	1.4	10.83	HA31	63A6	1100
79.4	11	2.0	10.83	HA41	63A6	1100
79.4	11	2.5	10.83	HA51	63A6	3000
35.0	24	3.8	24.55	HA32	63A6	2000
28.2	30	2.8	30.55	HA32	63A6	2000
24.3	34	2.8	35.44	HA32	63A6	2000
19.5	43	2.2	44.10	HA32	63A6	2000
19.5	43	3.4	44.10	HA42	63A6	4300
17.6	47	1.8	48.75	HA32	63A6	2000
17.6	47	2.6	48.75	HA42	63A6	4300
16.8	49	2.2	51.32	HA33	63A6	2000
16.8	49	3.2	51.32	HA43	63A6	4300
14.4	57	1.9	59.65	HA33	63A6	2000
14.4	57	2.8	59.65	HA43	63A6	4300
14.2	59	1.7	60.67	HA32	63A6	2000
14.2	59	2.3	60.67	HA42	63A6	4300
12.9	63	3.3	66.78	H033	63A6	5500
11.9	69	1.5	72.27	HA33	63A6	2000
11.9	69	2.3	72.27	HA43	63A6	4300
11.5	71	3.0	74.84	H033	63A6	5500
9.9	83	3.8	87.05	H043	63A6	6600
9.8	84	3.8	88.02	HA53	63A6	6000
9.6	85	1.8	89.94	HA43	63A6	4300
8.7	94	2.2	99.27	H033	63A6	5500
8.0	103	2.0	108.05	H033	63A6	5500
7.8	105	1.5	110.51	HA43	63A6	4300
7.7	106	3.0	111.61	HA53	63A6	6000
7.5	109	2.9	114.55	H043	63A6	6600
7.0	117	1.8	123.71	H033	63A6	5500
6.8	119	2.6	125.69	H043	63A6	6600
6.2	132	2.4	138.71	HA53	63A6	6000
6.2	132	3.8	138.71	HA63	63A6	8000
6.1	135	2.3	142.04	H043	63A6	6600
6.0	136	1.5	143.33	H033	63A6	5500
5.5	149	3.5	157.29	H053	63A6	8000
5.3	155	2.0	163.05	HA53	63A6	6000
5.3	155	3.3	163.05	HA63	63A6	8000
5.2	157	2.0	165.38	H043	63A6	6600
4.4	185	2.8	194.56	H053	63A6	8000
4.3	190	1.7	200.27	HA53	63A6	6000

5.1 H/HA GEARED MOTORS (50Hz)

0.09 kW

n2 [rpm]	M2 [Nm]	fs	i	Gear reducer	Motor	Fr2 [N]
4.3	190	2.7	200.27	HA63	63A6	8000
4.2	195	1.6	205.07	H043	63A6	6600
4.0	205	2.6	216.38	H053	63A6	8000
3.8	216	1.5	227.50	H043	63A6	6600
3.7	223	1.4	235.41	HA53	63A6	6000
3.7	223	2.3	235.41	HA63	63A6	8000
3.2	254	2.1	267.65	H053	63A6	8000
3.0	270	1.9	284.81	HA63	63A6	8000
2.4	336	1.5	353.98	HA63	63A6	8000

0.12 kW

n2 [rpm]	M2 [Nm]	fs	i	Gear reducer	Motor	Fr2 [N]
181.1	6	3.7	4.75	HA31	63B6	884
170.2	7	3.4	7.88	HA31	63A4	903
170.2	7	3.8	7.88	HA41	63A4	913
168.6	7	3.6	5.10	HA31	63B6	906
157.7	7	3.4	5.45	HA31	63B6	926
136.5	8	2.9	6.30	HA31	63B6	972
123.7	9	1.6	10.83	HA31	63A4	1004
123.7	9	2.2	10.83	HA41	63A4	1015
123.7	9	2.8	10.83	HA51	63A4	2798
109.2	10	2.2	7.88	HA31	63B6	1047
109.2	10	2.6	7.88	HA41	63B6	1058
79.4	14	1.5	10.83	HA41	63B6	1100
79.4	14	1.9	10.83	HA51	63B6	3000
52.2	21	3.9	16.49	HA32	63B6	1873
43.9	25	3.2	30.55	HA32	63A4	1985
42.4	26	3.6	20.26	HA32	63B6	2000
37.8	29	3.1	35.44	HA32	63A4	2000
35.0	32	2.8	24.55	HA32	63B6	2000
30.4	36	2.5	44.10	HA32	63A4	2000
30.4	36	3.9	44.10	HA42	63A4	4300
28.2	39	2.1	30.55	HA32	63B6	2000
28.2	39	3.7	30.55	HA42	63B6	4300
27.5	40	2.0	48.75	HA32	63A4	2000
27.5	40	2.9	48.75	HA42	63A4	4300
26.1	41	2.4	51.32	HA33	63A4	2000
26.1	41	3.6	51.32	HA43	63A4	4300
24.3	46	2.1	35.44	HA32	63B6	2000
24.3	46	3.4	35.44	HA42	63B6	4300
22.5	48	2.1	59.65	HA33	63A4	2000
22.5	48	3.1	59.65	HA43	63A4	4300
22.1	50	1.9	60.67	HA32	63A4	2000

5.1 H/HA GEARED MOTORS (50Hz)

0.12 kW

n2 [rpm]	M2 [Nm]	fs	i	Gear reducer	Motor	Fr2 [N]
22.1	50	2.6	60.67	HA42	63A4	4300
20.1	54	3.7	66.78	H033	63A4	5500
19.5	57	1.7	44.10	HA32	63B6	2000
19.5	57	2.6	44.10	HA42	63B6	4300
18.5	58	1.7	72.27	HA33	63A4	2000
18.5	58	2.6	72.27	HA43	63A4	4300
17.9	60	3.3	74.84	H033	63A4	5500
17.6	63	1.3	48.75	HA32	63B6	2000
17.6	63	1.9	48.75	HA42	63B6	4300
16.8	65	1.6	51.32	HA33	63B6	2000
16.8	65	2.4	51.32	HA43	63B6	4300
16.0	68	3.1	53.59	H033	63B6	5500
14.9	72	1.4	89.94	HA33	63A4	2000
14.9	72	2.1	89.94	HA43	63A4	4300
14.4	75	1.4	59.65	HA33	63B6	2000
14.4	75	2.1	59.65	HA43	63B6	4300
14.2	78	1.3	60.67	HA32	63B6	2000
14.2	78	1.7	60.67	HA42	63B6	4300
13.5	80	2.5	99.27	H033	63A4	5500
12.9	84	2.5	66.78	H033	63B6	5500
12.4	87	2.3	108.05	H033	63A4	5500
12.1	89	1.7	110.51	HA43	63A4	4300
12.0	90	3.3	111.61	HA53	63A4	6000
11.9	91	1.7	72.27	HA43	63B6	4300
11.7	92	3.3	114.55	H043	63A4	6600
11.5	95	2.2	74.84	H033	63B6	5500
11.5	95	3.3	74.88	HA53	63B6	6000
11.2	97	3.2	76.67	H043	63B6	6600
10.8	99	2.0	123.71	H033	63A4	5500
10.7	101	3.0	125.69	H043	63A4	6600
10.0	108	1.4	133.88	HA43	63A4	4300
9.9	110	2.9	87.05	H043	63B6	6600
9.8	111	2.8	88.02	HA53	63B6	6000
9.7	112	2.7	138.71	HA53	63A4	6000
9.6	114	1.4	89.94	HA43	63B6	4300
9.4	114	2.6	142.04	H043	63A4	6600
9.3	115	1.7	143.33	H033	63A4	5500
8.7	126	1.7	99.27	H033	63B6	5500
8.5	126	4.0	157.29	H053	63A4	8000
8.2	131	2.3	163.05	HA53	63A4	6000
8.2	131	3.7	163.05	HA63	63A4	8000
8.1	133	2.3	165.38	H043	63A4	6600
8.0	137	1.5	108.05	H033	63B6	5500
7.9	138	3.8	108.95	H053	63B6	8000
7.7	141	2.2	111.61	HA53	63B6	6000

5.1 H/HA GEARED MOTORS (50Hz)

0.12 kW

n2 [rpm]	M2 [Nm]	fs	i	Gear reducer	Motor	Fr2 [N]
7.7	141	3.6	111.61	HA63	63B6	8000
7.5	144	1.4	178.61	H033	63A4	5500
7.5	145	2.2	114.55	H043	63B6	6600
7.0	157	1.3	123.71	H033	63B6	5500
6.9	156	3.2	194.56	H053	63A4	8000
6.8	159	1.3	197.17	H033	63A4	5500
6.8	159	2.0	125.69	H043	63B6	6600
6.7	161	1.9	200.27	HA53	63A4	6000
6.7	161	3.0	200.27	HA63	63A4	8000
6.5	165	1.8	205.07	H043	63A4	6600
6.4	170	3.1	134.76	H053	63B6	8000
6.2	174	2.9	216.38	H053	63A4	8000
6.2	175	1.8	138.71	HA53	63B6	6000
6.2	175	2.9	138.71	HA63	63B6	8000
6.1	180	1.8	142.04	H043	63B6	6600
5.9	183	1.6	227.50	H043	63A4	6600
5.7	189	1.6	235.41	HA53	63A4	6000
5.7	189	2.5	235.41	HA63	63A4	8000
5.5	199	2.6	157.29	H053	63B6	8000
5.3	206	1.5	163.05	HA53	63B6	6000
5.3	206	2.4	163.05	HA63	63B6	8000
5.2	209	1.5	165.38	H043	63B6	6600
5.0	215	2.3	267.65	H053	63A4	8000
4.8	227	1.3	282.10	H043	63A4	6600
4.7	229	1.3	284.81	HA53	63A4	6000
4.7	229	2.1	284.81	HA63	63A4	8000
4.4	246	2.1	194.56	H053	63B6	8000
4.3	253	2.0	200.27	HA63	63B6	8000
4.0	274	1.9	216.38	H053	63B6	8000
3.8	285	1.7	353.98	HA63	63A4	8000
3.7	298	1.7	235.41	HA63	63B6	8000
3.2	339	1.6	267.65	H053	63B6	8000
3.0	360	1.4	284.81	HA63	63B6	8000

0.15 kW

n2 [rpm]	M2 [Nm]	fs	i	Gear reducer	Motor	Fr2 [N]
255.0	6	3.8	3.18	HA31	63C6	789
241.3	6	3.6	3.36	HA31	63C6	804
209.5	7	3.3	3.87	HA31	63C6	842
192.2	7	3.0	4.21	HA31	63C6	867
170.5	8	2.8	4.75	HA31	63C6	902
170.5	8	3.8	4.75	HA41	63C6	912
158.8	9	2.7	5.10	HA31	63C6	924

5.1 H/HA GEARED MOTORS (50Hz)

0.15 kW

n2 [rpm]	M2 [Nm]	fs	i	Gear reducer	Motor	Fr2 [N]
148.5	9	2.6	5.45	HA31	63C6	945
148.5	9	3.3	5.45	HA41	63C6	955
128.6	11	2.2	6.30	HA31	63C6	991
102.9	14	1.7	7.88	HA31	63C6	1068
102.9	14	1.9	7.88	HA41	63C6	1080
102.9	14	3.1	7.88	HA51	63C6	2975
74.8	19	1.4	10.83	HA51	63C6	3000
61.1	23	3.7	13.25	HA32	63C6	1777
49.1	28	3.0	16.49	HA32	63C6	1911
40.0	35	2.7	20.26	HA32	63C6	2000
33.0	42	2.1	24.55	HA32	63C6	2000
33.0	42	3.9	24.55	HA42	63C6	4300
26.5	52	1.6	30.55	HA32	63C6	2000
26.5	52	2.8	30.55	HA42	63C6	4300
22.9	61	1.6	35.44	HA32	63C6	2000
22.9	61	2.6	35.44	HA42	63C6	4300
18.4	76	1.2	44.10	HA32	63C6	2000
18.4	76	1.9	44.10	HA42	63C6	4300
16.6	84	1.4	48.75	HA42	63C6	4300
16.3	84	3.8	49.80	HA53	63C6	6000
15.8	86	1.8	51.32	HA43	63C6	4300
15.1	90	2.3	53.59	H033	63C6	5500
13.6	100	1.6	59.65	HA43	63C6	4300
13.4	104	1.3	60.67	HA42	63C6	4300
13.4	101	3.1	60.25	HA53	63C6	6000
13.1	104	3.0	61.83	H043	63C6	6600
12.1	112	1.9	66.78	H033	63C6	5500
11.2	121	1.3	72.27	HA43	63C6	4300
10.8	126	1.7	74.84	H033	63C6	5500
10.8	126	2.5	74.88	HA53	63C6	6000
10.6	129	2.4	76.67	H043	63C6	6600
9.3	146	2.2	87.05	H043	63C6	6600
9.2	148	2.1	88.02	HA53	63C6	6000
9.2	148	3.4	88.02	HA63	63C6	8000
8.9	152	3.5	90.51	H053	63C6	8000
8.2	167	1.3	99.27	H033	63C6	5500
7.4	183	2.9	108.95	H053	63C6	8000
7.3	187	1.7	111.61	HA53	63C6	6000
7.3	187	2.7	111.61	HA63	63C6	8000
7.1	192	1.6	114.55	H043	63C6	6600
6.4	211	1.5	125.69	H043	63C6	6600
6.0	226	2.3	134.76	H053	63C6	8000
5.8	233	1.4	138.71	HA53	63C6	6000
5.8	233	2.2	138.71	HA63	63C6	8000
5.7	238	1.3	142.04	H043	63C6	6600

5.1 H/HA GEARED MOTORS (50Hz)

0.15 kW

n2 [rpm]	M2 [Nm]	fs	i	Gear reducer	Motor	Fr2 [N]
5.1	264	2.0	157.29	H053	63C6	8000
5.0	274	1.8	163.05	HA63	63C6	8000
4.2	327	1.6	194.56	H053	63C6	8000
4.0	336	1.5	200.27	HA63	63C6	8000
3.7	363	1.4	216.38	H053	63C6	8000
3.4	395	1.3	235.41	HA63	63C6	8000

0.18 kW

n2 [rpm]	M2 [Nm]	fs	i	Gear reducer	Motor	Fr2 [N]
355.6	5	3.6	7.88	HA31	63A2	706
315.6	5	4.0	4.21	HA31	63B4	735
305.7	6	3.8	2.94	HA31	71A6	743
283.3	6	3.5	3.18	HA31	71A6	762
280.0	6	3.7	4.75	HA31	63B4	765
268.1	6	3.3	3.36	HA31	71A6	776
260.8	6	3.6	5.10	HA31	63B4	783
258.5	6	1.7	10.83	HA31	63A2	785
258.5	6	2.4	10.83	HA41	63A2	794
258.5	6	3.0	10.83	HA51	63A2	2188
243.8	7	3.4	5.45	HA31	63B4	801
232.8	7	3.0	3.87	HA31	71A6	813
213.6	8	2.8	4.21	HA31	71A6	837
211.1	8	2.9	6.30	HA31	63B4	840
189.5	9	2.6	4.75	HA31	71A6	871
189.5	9	3.5	4.75	HA41	71A6	881
176.5	10	2.5	5.10	HA31	71A6	892
168.9	10	2.2	7.88	HA31	63B4	905
168.9	10	2.5	7.88	HA41	63B4	915
165.0	10	2.4	5.45	HA31	71A6	912
165.0	10	3.1	5.45	HA41	71A6	922
142.9	12	2.0	6.30	HA31	71A6	957
122.8	14	1.5	10.83	HA41	63B4	1018
122.8	14	1.8	10.83	HA51	63B4	2805
117.4	14	3.7	7.67	H041	71A6	1000
114.3	15	1.6	7.88	HA31	71A6	1031
114.3	15	1.8	7.88	HA41	71A6	1042
114.3	15	2.9	7.88	HA51	71A6	2873
102.9	16	3.5	8.75	H041	71A6	1000
91.7	17	3.5	30.55	HA32	63A2	1552
83.1	20	1.3	10.83	HA51	71A6	3000
80.7	20	3.9	16.49	HA32	63B4	1620
79.0	20	3.3	35.44	HA32	63A2	1631
67.9	25	3.4	13.25	HA32	71A6	1716

5.1 H/HA GEARED MOTORS (50Hz)

0.18 kW

n2 [rpm]	M2 [Nm]	fs	i	Gear reducer	Motor	Fr2 [N]
65.6	25	3.6	20.26	HA32	63B4	1735
63.5	25	2.7	44.10	HA32	63A2	1755
57.4	28	2.2	48.75	HA32	63A2	1814
57.4	28	3.1	48.75	HA42	63A2	3819
54.6	31	2.8	16.49	HA32	71A6	1845
54.6	29	2.6	51.32	HA33	63A2	1846
54.6	29	3.9	51.32	HA43	63A2	3885
54.2	30	2.8	24.55	HA32	63B4	1850
46.9	33	2.3	59.65	HA33	63A2	1940
46.9	33	3.4	59.65	HA43	63A2	4085
46.2	35	2.1	60.67	HA32	63A2	1951
46.2	35	2.8	60.67	HA42	63A2	4108
44.4	38	2.5	20.26	HA32	71A6	1976
43.5	38	2.1	30.55	HA32	63B4	1990
43.5	38	3.7	30.55	HA42	63B4	4189
38.7	40	1.9	72.27	HA33	63A2	2000
38.7	40	2.8	72.27	HA43	63A2	4300
37.5	44	2.0	35.44	HA32	63B4	2000
37.5	44	3.4	35.44	HA42	63B4	4300
37.4	42	3.6	74.84	H033	63A2	5500
36.7	45	2.0	24.55	HA32	71A6	2000
36.7	45	3.6	24.55	HA42	71A6	4300
31.1	50	1.5	89.94	HA33	63A2	2000
31.1	50	2.2	89.94	HA43	63A2	4300
30.3	55	3.8	29.70	H032	71A6	5500
30.2	55	1.6	44.10	HA32	63B4	2000
30.2	55	2.6	44.10	HA42	63B4	4300
29.5	57	1.5	30.55	HA32	71A6	2000
29.5	57	2.6	30.55	HA42	71A6	4300
28.2	55	2.7	99.27	H033	63A2	5500
27.4	61	3.4	32.89	H032	71A6	5500
27.3	60	1.3	48.75	HA32	63B4	2000
27.3	60	1.9	48.75	HA42	63B4	4300
25.9	60	2.5	108.05	H033	63A2	5500
25.9	62	1.6	51.32	HA33	63B4	2000
25.9	62	2.4	51.32	HA43	63B4	4300
25.4	66	1.4	35.44	HA32	71A6	2000
25.4	66	2.4	35.44	HA42	71A6	4300
25.3	62	1.2	110.51	HA33	63A2	2000
25.3	62	1.8	110.51	HA43	63A2	4300
25.1	62	3.6	111.61	HA53	63A2	6000
24.8	65	3.1	53.59	H033	63B4	5500
24.4	64	3.5	114.55	H043	63A2	6600
23.7	70	3.0	37.92	H032	71A6	5500
22.6	69	2.2	123.71	H033	63A2	5500

5.1 H/HA GEARED MOTORS (50Hz)

0.18 kW

n2 [rpm]	M2 [Nm]	fs	i	Gear reducer	Motor	Fr2 [N]
22.3	70	3.2	125.69	H043	63A2	6600
22.3	72	1.4	59.65	HA33	63B4	2000
22.3	72	2.1	59.65	HA43	63B4	4300
21.9	75	1.3	60.67	HA32	63B4	2000
21.9	75	1.7	60.67	HA42	63B4	4300
21.7	77	2.7	41.40	H032	71A6	5500
21.5	75	4.0	61.83	H043	63B4	6600
20.9	75	1.5	133.88	HA43	63A2	4300
20.6	81	3.6	43.75	H042	71A6	6600
20.4	82	1.8	44.10	HA42	71A6	4300
20.2	77	2.9	138.71	HA53	63A2	6000
19.9	81	2.5	66.78	H033	63B4	5500
19.7	79	2.8	142.04	H043	63A2	6600
19.5	80	1.9	143.33	H033	63A2	5500
19.0	88	2.4	47.25	H032	71A6	5500
18.9	88	3.3	47.53	H042	71A6	6600
18.5	90	1.3	48.75	HA42	71A6	4300
18.4	88	1.7	72.27	HA43	63B4	4300
18.1	90	3.5	49.80	HA53	71A6	6000
17.8	91	2.2	74.84	H033	63B4	5500
17.8	91	3.3	74.88	HA53	63B4	6000
17.5	93	1.7	51.32	HA43	71A6	4300
17.3	93	3.2	76.67	H043	63B4	6600
17.2	91	2.5	163.05	HA53	63A2	6000
17.2	91	4.0	163.05	HA63	63A2	8000
16.9	92	2.4	165.38	H043	63A2	6600
16.8	97	2.2	53.59	H033	71A6	5500
16.8	93	1.2	166.61	HA43	63A2	4300
16.6	100	2.9	54.25	H042	71A6	6600
15.7	99	1.5	178.61	H033	63A2	5500
15.3	106	2.8	87.05	H043	63B4	6600
15.1	108	1.5	59.65	HA43	71A6	4300
15.1	107	2.8	88.02	HA53	63B4	6000
14.9	109	2.9	60.25	HA53	71A6	6000
14.8	112	1.2	60.67	HA42	71A6	4300
14.8	109	1.4	89.94	HA43	63B4	4300
14.6	112	2.8	61.83	H043	71A6	6600
14.4	108	3.5	194.56	H053	63A2	8000
14.2	110	1.4	197.17	H033	63A2	5500
14.0	112	2.0	200.27	HA53	63A2	6000
14.0	112	3.2	200.27	HA63	63A2	8000
13.7	114	2.0	205.07	H043	63A2	6600
13.5	121	1.7	66.78	H033	71A6	5500
13.4	121	1.7	99.27	H033	63B4	5500
12.9	121	3.1	216.38	H053	63A2	8000

5.1 H/HA GEARED MOTORS (50Hz)

0.18 kW

n2 [rpm]	M2 [Nm]	fs	i	Gear reducer	Motor	Fr2 [N]
12.4	132	4.0	72.75	H053	71A6	8000
12.3	131	1.5	108.05	H033	63B4	5500
12.3	127	1.8	227.50	H043	63A2	6600
12.2	132	3.8	108.95	H053	63B4	8000
12.0	136	1.5	74.84	H033	71A6	5500
12.0	136	2.3	74.88	HA53	71A6	6000
12.0	136	3.7	74.88	HA63	71A6	8000
11.9	136	2.2	111.61	HA53	63B4	6000
11.9	131	1.7	235.41	HA53	63A2	6000
11.9	136	3.5	111.61	HA63	63B4	8000
11.9	131	2.7	235.41	HA63	63A2	8000
11.7	139	2.3	76.67	H043	71A6	6600
11.6	139	2.2	114.55	H043	63B4	6600
11.4	137	1.1	245.70	H033	63A2	5500
10.8	150	1.3	123.71	H033	63B4	5500
10.6	153	2.0	125.69	H043	63B4	6600
10.5	149	2.5	267.65	H053	63A2	8000
10.3	158	2.0	87.05	H043	71A6	6600
10.2	160	2.0	88.02	HA53	71A6	6000
10.2	160	3.2	88.02	HA63	71A6	8000
9.9	157	1.4	282.10	H043	63A2	6600
9.9	164	3.2	90.51	H053	71A6	8000
9.9	164	3.1	134.76	H053	63B4	8000
9.8	159	1.4	284.81	HA53	63A2	6000
9.8	159	2.3	284.81	HA63	63A2	8000
9.6	169	1.8	138.71	HA53	63B4	6000
9.6	169	2.8	138.71	HA63	63B4	8000
9.4	173	1.7	142.04	H043	63B4	6600
8.5	191	2.6	157.29	H053	63B4	8000
8.3	198	2.7	108.95	H053	71A6	8000
8.2	198	1.5	163.05	HA53	63B4	6000
8.2	198	2.4	163.05	HA63	63B4	8000
8.1	202	1.6	111.61	HA53	71A6	6000
8.1	202	2.5	111.61	HA63	71A6	8000
8.0	201	1.5	165.38	H043	63B4	6600
7.9	208	1.5	114.55	H043	71A6	6600
7.9	197	1.1	353.98	HA53	63A2	6000
7.9	197	1.8	353.98	HA63	63A2	8000
7.2	228	1.4	125.69	H043	71A6	6600
6.8	236	2.1	194.56	H053	63B4	8000
6.7	244	2.1	134.76	H053	71A6	8000
6.6	246	3.6	135.40	H063	71A6	12000
6.6	243	1.2	200.27	HA53	63B4	6000
6.6	243	2.0	200.27	HA63	63B4	8000
6.5	249	1.2	205.07	H043	63B4	6600

5.1 H/HA GEARED MOTORS (50Hz)

0.18 kW

n2 [rpm]	M2 [Nm]	fs	i	Gear reducer	Motor	Fr2 [N]
6.5	252	1.3	138.71	HA53	71A6	6000
6.5	252	2.0	138.71	HA63	71A6	8000
6.1	263	1.9	216.38	H053	63B4	8000
6.0	271	3.3	149.51	H063	71A6	12000
5.7	285	1.8	157.29	H053	71A6	8000
5.6	286	1.7	235.41	HA63	63B4	8000
5.5	296	1.7	163.05	HA63	71A6	8000
5.3	309	2.9	170.67	H063	71A6	12000
5.0	325	1.5	267.65	H053	63B4	8000
4.8	338	2.6	186.18	H063	71A6	12000
4.7	346	1.4	284.81	HA63	63B4	8000
4.6	353	1.5	194.56	H053	71A6	8000
4.5	363	1.4	200.27	HA63	71A6	8000
4.2	392	1.3	216.38	H053	71A6	8000
4.2	390	2.3	215.21	H063	71A6	12000
3.8	426	2.1	234.67	H063	71A6	12000
3.4	486	1.8	268.00	H063	71A6	12000

0.22 kW

n2 [rpm]	M2 [Nm]	fs	i	Gear reducer	Motor	Fr2 [N]
396.2	5	3.9	3.36	HA31	63C4	681
344.0	6	3.5	3.87	HA31	63C4	714
315.6	6	3.3	4.21	HA31	63C4	735
280.0	7	3.0	4.75	HA31	63C4	765
260.8	8	2.9	5.10	HA31	63C4	783
243.8	8	2.8	5.45	HA31	63C4	801
243.8	8	3.6	5.45	HA41	63C4	810
211.1	10	2.4	6.30	HA31	63C4	840
168.9	12	1.8	7.88	HA31	63C4	905
168.9	12	2.1	7.88	HA41	63C4	915
168.9	12	3.3	7.88	HA51	63C4	2522
122.8	17	1.2	10.83	HA41	63C4	1018
122.8	17	1.5	10.83	HA51	63C4	2805
100.4	20	4.0	13.25	HA32	63C4	1506
80.7	25	3.2	16.49	HA32	63C4	1620
65.6	31	2.9	20.26	HA32	63C4	1735
54.2	37	2.3	24.55	HA32	63C4	1850
43.5	46	1.7	30.55	HA32	63C4	1990
43.5	46	3.0	30.55	HA42	63C4	4189
37.5	54	1.7	35.44	HA32	63C4	2000
37.5	54	2.8	35.44	HA42	63C4	4300
30.2	67	1.3	44.10	HA32	63C4	2000
30.2	67	2.1	44.10	HA42	63C4	4300

5.1 H/HA GEARED MOTORS (50Hz)

0.22 kW

n2 [rpm]	M2 [Nm]	fs	i	Gear reducer	Motor	Fr2 [N]
27.3	74	1.6	48.75	HA42	63C4	4300
25.9	76	1.3	51.32	HA33	63C4	2000
25.9	76	2.0	51.32	HA43	63C4	4300
24.8	80	2.5	53.59	H033	63C4	5500
22.3	89	1.7	59.65	HA43	63C4	4300
22.1	89	3.4	60.25	HA53	63C4	6000
21.9	92	1.4	60.67	HA42	63C4	4300
21.5	92	3.3	61.83	H043	63C4	6600
19.9	99	2.0	66.78	H033	63C4	5500
18.4	107	1.4	72.27	HA43	63C4	4300
17.8	111	1.8	74.84	H033	63C4	5500
17.8	111	2.7	74.88	HA53	63C4	6000
17.3	114	2.6	76.67	H043	63C4	6600
15.3	129	2.3	87.05	H043	63C4	6600
15.1	131	2.3	88.02	HA53	63C4	6000
15.1	131	3.7	88.02	HA63	63C4	8000
14.7	134	3.7	90.51	H053	63C4	8000
13.4	147	1.4	99.27	H033	63C4	5500
12.3	160	1.2	108.05	H033	63C4	5500
12.2	162	3.1	108.95	H053	63C4	8000
11.9	166	1.8	111.61	HA53	63C4	6000
11.9	166	2.9	111.61	HA63	63C4	8000
11.6	170	1.8	114.55	H043	63C4	6600
10.6	187	1.6	125.69	H043	63C4	6600
9.9	200	2.5	134.76	H053	63C4	8000
9.6	206	1.5	138.71	HA53	63C4	6000
9.6	206	2.3	138.71	HA63	63C4	8000
9.4	211	1.4	142.04	H043	63C4	6600
8.5	234	2.1	157.29	H053	63C4	8000
8.2	242	1.2	163.05	HA53	63C4	6000
8.2	242	2.0	163.05	HA63	63C4	8000
8.0	246	1.2	165.38	H043	63C4	6600
6.8	289	1.7	194.56	H053	63C4	8000
6.6	297	1.6	200.27	HA63	63C4	8000
6.1	321	1.6	216.38	H053	63C4	8000
5.6	350	1.4	235.41	HA63	63C4	8000
5.0	397	1.3	267.65	H053	63C4	8000

0.25 kW

n2 [rpm]	M2 [Nm]	fs	i	Gear reducer	Motor	Fr2 [N]
513.3	4	4.0	5.45	HA31	63B2	625
448.3	5	3.9	2.94	HA31	63D4	654
444.4	5	3.4	6.30	HA31	63B2	656

5.1 H/HA GEARED MOTORS (50Hz)

0.25 kW

n2 [rpm]	M2 [Nm]	fs	i	Gear reducer	Motor	Fr2 [N]
437.6	5	3.8	3.18	HA31	71A4	659
415.6	6	3.6	3.18	HA31	63D4	670
414.0	6	3.6	3.36	HA31	71A4	671
393.2	6	3.4	3.36	HA31	63D4	683
359.5	6	3.3	3.87	HA31	71A4	704
355.6	6	2.6	7.88	HA31	63B2	706
355.6	6	3.0	7.88	HA41	63B2	714
352.9	7	3.0	2.55	HA31	71B6	708
341.4	7	3.1	3.87	HA31	63D4	716
329.8	7	3.0	4.21	HA31	71A4	724
313.2	7	2.8	4.21	HA31	63D4	737
305.7	8	2.7	2.94	HA31	71B6	743
305.7	8	3.4	2.94	HA41	71B6	751
292.6	8	2.8	4.75	HA31	71A4	754
292.6	8	3.8	4.75	HA41	71A4	762
283.3	8	2.5	3.18	HA31	71B6	762
277.9	8	2.6	4.75	HA31	63D4	767
277.9	8	3.6	4.75	HA41	63D4	775
272.5	8	2.7	5.10	HA31	71A4	772
268.1	9	2.4	3.36	HA31	71B6	776
258.8	9	2.6	5.10	HA31	63D4	785
258.5	9	1.2	10.83	HA31	63B2	785
258.5	9	1.7	10.83	HA41	63B2	794
258.5	9	2.2	10.83	HA51	63B2	2188
254.8	9	2.5	5.45	HA31	71A4	789
254.8	9	3.3	5.45	HA41	71A4	798
242.0	10	2.4	5.45	HA31	63D4	803
242.0	10	3.1	5.45	HA41	63D4	812
232.8	10	2.2	3.87	HA31	71B6	813
220.6	10	2.2	6.30	HA31	71A4	828
213.6	11	2.0	4.21	HA31	71B6	837
209.5	11	2.1	6.30	HA31	63D4	842
189.5	12	1.9	4.75	HA31	71B6	871
189.5	12	2.6	4.75	HA41	71B6	881
181.3	13	3.9	7.67	H041	71A4	1000
180.0	13	3.6	5.00	H041	71B6	1000
176.5	13	1.8	5.10	HA31	71B6	892
176.5	13	1.7	7.88	HA31	71A4	892
176.5	13	1.9	7.88	HA41	71A4	902
176.5	13	3.0	7.88	HA51	71A4	2485
167.6	14	1.6	7.88	HA31	63D4	907
167.6	14	1.8	7.88	HA41	63D4	918
167.6	14	2.9	7.88	HA51	63D4	2528
165.0	14	1.7	5.45	HA31	71B6	912
165.0	14	2.2	5.45	HA41	71B6	922

5.1 H/HA GEARED MOTORS (50Hz)

0.25 kW

n2 [rpm]	M2 [Nm]	fs	i	Gear reducer	Motor	Fr2 [N]
165.0	14	3.7	5.45	HA51	71B6	2542
163.6	14	3.7	5.50	H041	71B6	1000
158.9	15	3.8	8.75	H041	71A4	1000
147.8	16	3.3	6.09	H041	71B6	1000
142.9	16	1.5	6.30	HA31	71B6	957
128.3	18	1.4	10.83	HA51	71A4	2764
121.8	19	1.3	10.83	HA51	63D4	2812
117.4	20	2.6	7.67	H041	71B6	1000
114.3	20	1.3	7.88	HA41	71B6	1042
114.3	20	2.1	7.88	HA51	71B6	2873
114.1	19	3.3	24.55	HA32	63B2	1443
111.0	21	3.8	8.11	HA32	71B6	1457
104.9	22	3.7	13.25	HA32	71A4	1484
102.9	23	2.5	8.75	H041	71B6	1000
99.6	23	3.5	13.25	HA32	63D4	1510
91.7	24	2.5	30.55	HA32	63B2	1552
84.3	27	2.9	16.49	HA32	71A4	1596
82.3	28	3.4	10.94	HA32	71B6	1609
80.1	29	2.8	16.49	HA32	63D4	1624
79.0	28	2.4	35.44	HA32	63B2	1631
68.6	33	2.7	20.26	HA32	71A4	1710
67.9	34	2.5	13.25	HA32	71B6	1716
65.2	35	2.6	20.26	HA32	63D4	1740
63.5	35	1.9	44.10	HA32	63B2	1755
63.5	35	3.0	44.10	HA42	63B2	3694
57.4	39	1.6	48.75	HA32	63B2	1814
57.4	39	2.2	48.75	HA42	63B2	3819
56.6	40	2.1	24.55	HA32	71A4	1823
56.6	40	3.8	24.55	HA42	71A4	3837
54.6	42	2.0	16.49	HA32	71B6	1845
54.6	40	1.9	51.32	HA33	63B2	1846
54.6	42	3.5	16.49	HA42	71B6	3885
54.6	40	2.8	51.32	HA43	63B2	3885
53.8	43	2.0	24.55	HA32	63D4	1854
53.8	43	3.6	24.55	HA42	63D4	3904
52.2	41	3.6	53.59	H033	63B2	5500
46.9	46	1.6	59.65	HA33	63B2	1940
46.9	46	2.4	59.65	HA43	63B2	4085
46.2	48	1.5	60.67	HA32	63B2	1951
46.2	48	2.0	60.67	HA42	63B2	4108
45.5	50	1.6	30.55	HA32	71A4	1961
45.5	50	2.8	30.55	HA42	71A4	4128
44.4	52	1.8	20.26	HA32	71B6	1976
44.4	52	3.0	20.26	HA42	71B6	4161
43.2	53	1.5	30.55	HA32	63D4	1995

5.1 H/HA GEARED MOTORS (50Hz)

0.25 kW

n2 [rpm]	M2 [Nm]	fs	i	Gear reducer	Motor	Fr2 [N]
43.2	53	2.6	30.55	HA42	63D4	4199
42.3	54	3.7	32.89	H032	71A4	5500
41.9	52	2.9	66.78	H033	63B2	5500
39.7	58	3.6	22.68	H032	71B6	5500
39.2	58	1.5	35.44	HA32	71A4	2000
39.2	58	2.6	35.44	HA42	71A4	4300
38.7	56	1.3	72.27	HA33	63B2	2000
38.7	56	2.0	72.27	HA43	63B2	4300
37.8	61	3.4	23.83	H032	71B6	5500
37.4	58	2.6	74.84	H033	63B2	5500
37.4	58	3.9	74.88	HA53	63B2	5508
37.2	62	1.5	35.44	HA32	63D4	2000
37.2	62	2.4	35.44	HA42	63D4	4300
36.7	63	3.2	37.92	H032	71A4	5500
36.7	63	2.6	24.55	HA42	71B6	4300
36.5	59	3.8	76.67	H043	63B2	6600
34.1	68	3.1	26.39	H032	71B6	5500
33.6	68	2.9	41.40	H032	71A4	5500
32.2	67	3.3	87.05	H043	63B2	6600
31.8	72	3.9	43.75	H042	71A4	6600
31.8	68	3.3	88.02	HA53	63B2	5813
31.5	73	1.2	44.10	HA32	71A4	2000
31.5	73	1.9	44.10	HA42	71A4	4300
31.1	70	1.6	89.94	HA43	63B2	4300
30.3	76	2.7	29.70	H032	71B6	5500
29.9	77	1.2	44.10	HA32	63D4	2000
29.9	77	1.8	44.10	HA42	63D4	4300
29.6	78	3.8	30.45	H042	71B6	6600
29.5	79	1.9	30.55	HA42	71B6	4300
29.4	78	2.6	47.25	H032	71A4	5500
29.2	78	3.6	47.53	H042	71A4	6600
28.5	80	1.4	48.75	HA42	71A4	4300
28.2	77	2.0	99.27	H033	63B2	5500
27.9	80	3.7	49.80	HA53	71A4	6000
27.4	85	2.5	32.89	H032	71B6	5500
27.1	83	1.2	51.32	HA33	71A4	2000
27.1	85	1.4	48.75	HA42	63D4	4300
27.1	83	1.8	51.32	HA43	71A4	4300
26.5	85	3.5	49.80	HA53	63D4	6000
26.4	88	3.4	34.10	H042	71B6	6600
25.9	84	1.8	108.05	H033	63B2	5500
25.9	87	2.3	53.59	H033	71A4	5500
25.7	87	1.7	51.32	HA43	63D4	4300
25.6	89	3.1	54.25	H042	71A4	6600
25.4	91	1.7	35.44	HA42	71B6	4300

5.1 H/HA GEARED MOTORS (50Hz)

0.25 kW

n2 [rpm]	M2 [Nm]	fs	i	Gear reducer	Motor	Fr2 [N]
25.3	85	1.3	110.51	HA43	63B2	4300
25.1	86	2.6	111.61	HA53	63B2	6000
24.6	91	2.2	53.59	H033	63D4	5500
24.4	89	2.5	114.55	H043	63B2	6600
23.8	97	3.0	37.76	H042	71B6	6600
23.7	98	2.2	37.92	H032	71B6	5500
23.3	96	1.6	59.65	HA43	71A4	4300
23.1	97	3.1	60.25	HA53	71A4	6000
22.9	100	1.3	60.67	HA42	71A4	4300
22.6	96	1.6	123.71	H033	63B2	5500
22.5	100	3.0	61.83	H043	71A4	6600
22.3	97	2.3	125.69	H043	63B2	6600
22.1	101	1.5	59.65	HA43	63D4	4300
21.9	102	2.9	60.25	HA53	63D4	6000
21.8	105	1.2	60.67	HA42	63D4	4300
21.7	106	2.0	41.40	H032	71B6	5500
21.3	105	2.9	61.83	H043	63D4	6600
20.8	108	1.9	66.78	H033	71A4	5500
20.8	104	3.6	134.76	H053	63B2	8000
20.6	113	2.6	43.75	H042	71B6	6600
20.4	113	1.3	44.10	HA42	71B6	4300
20.2	107	2.1	138.71	HA53	63B2	6000
20.2	107	3.4	138.71	HA63	63B2	8000
19.8	114	1.8	66.78	H033	63D4	5500
19.7	110	2.0	142.04	H043	63B2	6600
19.5	111	1.4	143.33	H033	63B2	5500
19.2	117	1.3	72.27	HA43	71A4	4300
19.0	122	1.7	47.25	H032	71B6	5500
18.9	122	2.4	47.53	H042	71B6	6600
18.6	121	1.7	74.84	H033	71A4	5500
18.6	121	2.5	74.88	HA53	71A4	6000
18.6	121	4.0	74.88	HA63	71A4	8000
18.3	123	1.2	72.27	HA43	63D4	4300
18.1	124	2.4	76.67	H043	71A4	6600
18.1	125	2.5	49.80	HA53	71B6	6000
17.8	122	3.1	157.29	H053	63B2	8000
17.6	127	1.6	74.84	H033	63D4	5500
17.6	127	2.4	74.88	HA53	63D4	6000
17.6	127	3.8	74.88	HA63	63D4	8000
17.2	130	2.3	76.67	H043	63D4	6600
17.2	126	1.8	163.05	HA53	63B2	6000
17.2	126	2.9	163.05	HA63	63B2	8000
16.9	128	1.8	165.38	H043	63B2	6600
16.8	135	1.6	53.59	H033	71B6	5500
16.6	140	2.1	54.25	H042	71B6	6600

5.1 H/HA GEARED MOTORS (50Hz)

0.25 kW

n2 [rpm]	M2 [Nm]	fs	i	Gear reducer	Motor	Fr2 [N]
16.0	141	2.1	87.05	H043	71A4	6600
16.0	144	3.6	56.11	H052	71B6	8000
15.8	142	2.1	88.02	HA53	71A4	6000
15.8	142	3.4	88.02	HA63	71A4	8000
15.4	146	3.4	90.51	H053	71A4	8000
15.3	148	3.5	58.81	H053	71B6	8000
15.2	148	2.0	87.05	H043	63D4	6600
15.0	150	2.0	88.02	HA53	63D4	6000
15.0	150	3.2	88.02	HA63	63D4	8000
14.9	152	2.1	60.25	HA53	71B6	6000
14.9	152	3.3	60.25	HA63	71B6	8000
14.6	156	2.0	61.83	H043	71B6	6600
14.6	154	3.2	90.51	H053	63D4	8000
14.4	150	2.5	194.56	H053	63B2	8000
14.0	160	1.2	99.27	H033	71A4	5500
14.0	155	1.5	200.27	HA53	63B2	6000
14.0	155	2.3	200.27	HA63	63B2	8000
13.7	159	1.4	205.07	H043	63B2	6600
13.5	168	1.2	66.78	H033	71B6	5500
13.3	169	1.2	99.27	H033	63D4	5500
12.9	167	2.2	216.38	H053	63B2	8000
12.8	176	2.8	108.95	H053	71A4	8000
12.5	180	1.7	111.61	HA53	71A4	6000
12.5	180	2.7	111.61	HA63	71A4	8000
12.4	183	2.9	72.75	H053	71B6	8000
12.3	176	1.3	227.50	H043	63B2	6600
12.1	185	1.6	114.55	H043	71A4	6600
12.1	185	2.7	108.95	H053	63D4	8000
12.0	189	1.7	74.88	HA53	71B6	6000
12.0	189	2.7	74.88	HA63	71B6	8000
11.9	182	1.2	235.41	HA53	63B2	6000
11.9	182	2.0	235.41	HA63	63B2	8000
11.8	190	1.6	111.61	HA53	63D4	6000
11.8	190	2.5	111.61	HA63	63D4	8000
11.7	193	1.6	76.67	H043	71B6	6600
11.5	195	1.5	114.55	H043	63D4	6600
11.1	203	1.5	125.69	H043	71A4	6600
10.5	214	1.4	125.69	H043	63D4	6600
10.5	207	1.8	267.65	H053	63B2	8000
10.3	219	1.4	87.05	H043	71B6	6600
10.3	218	2.3	134.76	H053	71A4	8000
10.3	219	3.9	135.40	H063	71A4	12000
10.2	222	1.4	88.02	HA53	71B6	6000
10.2	222	2.3	88.02	HA63	71B6	8000
10.0	224	1.3	138.71	HA53	71A4	6000

5.1 H/HA GEARED MOTORS (50Hz)

0.25 kW

n2 [rpm]	M2 [Nm]	fs	i	Gear reducer	Motor	Fr2 [N]
10.0	224	2.1	138.71	HA63	71A4	8000
9.9	228	2.3	90.51	H053	71B6	8000
9.8	229	1.3	142.04	H043	71A4	6600
9.8	229	2.2	134.76	H053	63D4	8000
9.8	220	1.6	284.81	HA63	63B2	8000
9.5	239	3.7	94.76	H063	71B6	12000
9.5	236	1.3	138.71	HA53	63D4	6000
9.5	236	2.0	138.71	HA63	63D4	8000
9.3	241	1.2	142.04	H043	63D4	6600
9.3	241	3.5	149.51	H063	71A4	12000
8.8	254	2.0	157.29	H053	71A4	8000
8.5	263	1.8	163.05	HA63	71A4	8000
8.4	267	1.9	157.29	H053	63D4	8000
8.3	274	1.9	108.95	H053	71B6	8000
8.1	276	3.1	170.67	H063	71A4	12000
8.1	281	1.8	111.61	HA63	71B6	8000
8.1	277	1.7	163.05	HA63	63D4	8000
7.9	274	1.3	353.98	HA63	63B2	8000
7.6	297	3.0	118.00	H063	71B6	12000
7.5	301	2.8	186.18	H063	71A4	12000
7.1	314	1.6	194.56	H053	71A4	8000
6.9	323	1.5	200.27	HA63	71A4	8000
6.8	331	1.5	194.56	H053	63D4	8000
6.7	339	1.5	134.76	H053	71B6	8000
6.6	341	2.6	135.40	H063	71B6	12000
6.6	340	1.4	200.27	HA63	63D4	8000
6.5	347	2.4	215.21	H063	71A4	12000
6.5	349	1.4	138.71	HA63	71B6	8000
6.4	349	1.4	216.38	H053	71A4	8000
6.1	368	1.4	216.38	H053	63D4	8000
6.0	377	2.4	149.51	H063	71B6	12000
5.9	379	2.2	234.67	H063	71A4	12000
5.9	380	1.3	235.41	HA63	71A4	8000
5.7	396	1.3	157.29	H053	71B6	8000
5.6	400	1.2	235.41	HA63	63D4	8000
5.3	430	2.1	170.67	H063	71B6	12000
5.2	433	2.0	268.00	H063	71A4	12000
4.8	469	1.9	186.18	H063	71B6	12000
4.2	542	1.6	215.21	H063	71B6	12000
3.8	591	1.5	234.67	H063	71B6	12000
3.4	675	1.3	268.00	H063	71B6	12000

5.1 H/HA GEARED MOTORS (50Hz)

0.37 kW

n2 [rpm]	M2 [Nm]	fs	i	Gear reducer	Motor	Fr2 [N]
878.3	4	4.0	3.18	HA31	63C2	522
840.0	4	3.8	3.36	HA31	71A2	530
831.1	4	3.8	3.36	HA31	63C2	532
729.3	5	3.5	3.87	HA31	71A2	556
721.6	5	3.4	3.87	HA31	63C2	558
669.2	5	3.2	4.21	HA31	71A2	572
662.0	5	3.2	4.21	HA31	63C2	574
593.7	6	3.0	4.75	HA31	71A2	595
587.4	6	2.9	4.75	HA31	63C2	597
587.4	6	4.0	4.75	HA41	63C2	604
552.9	6	2.9	5.10	HA31	71A2	610
547.1	6	2.9	5.10	HA31	63C2	612
541.2	6	3.0	2.55	HA31	71B4	614
517.0	6	2.7	5.45	HA31	71A2	623
517.0	6	3.5	5.45	HA41	71A2	630
511.5	6	2.7	5.45	HA31	63C2	626
511.5	6	3.5	5.45	HA41	63C2	633
470.0	7	3.6	2.00	H041	80A6	872
468.7	7	2.7	2.94	HA31	71B4	644
468.7	7	3.4	2.94	HA41	71B4	651
447.6	7	2.3	6.30	HA31	71A2	654
442.9	7	2.3	6.30	HA31	63C2	656
440.0	8	3.3	2.00	H041	71C6	889
434.4	8	2.5	3.18	HA31	71B4	661
411.1	8	2.4	3.36	HA31	71B4	673
369.3	9	3.4	2.55	H041	80A6	938
368.6	9	2.1	2.55	HA31	80A6	698
358.1	9	1.8	7.88	HA31	71A2	705
358.1	9	2.0	7.88	HA41	71A2	712
358.1	9	3.2	7.88	HA51	71A2	1963
356.9	10	2.2	3.87	HA31	71B4	705
354.3	9	1.8	7.88	HA31	63C2	707
354.3	9	2.0	7.88	HA41	63C2	715
354.3	9	3.2	7.88	HA51	63C2	1970
346.3	10	3.2	2.71	H041	80A6	956
345.7	10	3.1	2.55	H041	71C6	956
345.1	10	2.0	2.55	HA31	71C6	713
327.5	10	2.0	4.21	HA31	71B4	726
324.2	11	3.0	2.71	H041	71C6	975
319.2	11	1.9	2.94	HA31	80A6	732
319.2	11	2.4	2.94	HA41	80A6	740
319.2	11	3.9	2.94	HA51	80A6	2040
302.7	11	3.7	3.11	H041	80A6	995
298.9	12	1.8	2.94	HA31	71C6	748
298.9	12	2.3	2.94	HA41	71C6	757

5.1 H/HA GEARED MOTORS (50Hz)

0.37 kW

n2 [rpm]	M2 [Nm]	fs	i	Gear reducer	Motor	Fr2 [N]
298.9	12	3.6	2.94	HA51	71C6	2085
295.9	12	1.8	3.18	HA31	80A6	751
290.5	12	1.9	4.75	HA31	71B4	755
290.5	12	2.5	4.75	HA41	71B4	764
283.4	12	3.4	3.11	H041	71C6	1000
280.0	12	1.7	3.36	HA31	80A6	765
277.0	12	1.7	3.18	HA31	71C6	767
276.0	12	3.6	5.00	H041	71B4	1000
270.6	13	1.8	5.10	HA31	71B4	773
262.1	13	1.6	3.36	HA31	71C6	782
262.0	13	3.6	3.59	H041	80A6	1000
260.3	13	1.2	10.83	HA41	71A2	792
260.3	13	1.5	10.83	HA51	71A2	2183
257.5	13	1.2	10.83	HA41	63C2	795
257.5	13	1.5	10.83	HA51	63C2	2191
253.0	14	1.7	5.45	HA31	71B4	791
253.0	14	2.2	5.45	HA41	71B4	800
253.0	14	3.7	5.45	HA51	71B4	2204
250.9	14	3.7	5.50	H041	71B4	1000
245.2	14	3.3	3.59	H041	71C6	1000
243.1	14	1.5	3.87	HA31	80A6	802
227.6	15	1.4	3.87	HA31	71C6	819
226.6	15	3.3	6.09	H041	71B4	1000
223.8	15	3.1	4.20	H041	80A6	1000
223.1	16	1.4	4.21	HA31	80A6	825
219.0	16	1.5	6.30	HA31	71B4	830
212.8	15	3.9	13.25	HA32	71A2	1172
210.6	16	3.9	13.25	HA32	63C2	1177
209.5	17	2.9	4.20	H041	71C6	1000
208.8	17	1.3	4.21	HA31	71C6	843
197.9	17	1.3	4.75	HA31	80A6	859
197.9	17	1.8	4.75	HA41	80A6	868
197.9	17	3.0	4.75	HA51	80A6	2392
188.0	18	2.6	5.00	H041	80A6	1000
185.3	19	1.2	4.75	HA31	71C6	878
185.3	19	1.7	4.75	HA41	71C6	887
185.3	19	2.8	4.75	HA51	71C6	2445
180.0	19	2.6	7.67	H041	71B4	1000
176.0	20	2.4	5.00	H041	71C6	1000
175.2	20	1.3	7.88	HA41	71B4	904
175.2	20	2.0	7.88	HA51	71B4	2491
172.3	20	1.6	5.45	HA41	80A6	909
172.3	20	2.6	5.45	HA51	80A6	2505
171.0	19	3.1	16.49	HA32	71A2	1261
170.9	20	2.6	5.50	H041	80A6	1000

5.1 H/HA GEARED MOTORS (50Hz)

0.37 kW

n2 [rpm]	M2 [Nm]	fs	i	Gear reducer	Motor	Fr2 [N]
170.2	20	3.8	8.11	HA32	71B4	1263
169.2	19	3.1	16.49	HA32	63C2	1266
161.3	21	1.5	5.45	HA41	71C6	929
161.3	21	2.4	5.45	HA51	71C6	2561
160.0	22	2.4	5.50	H041	71C6	1000
157.7	22	2.5	8.75	H041	71B4	1000
154.3	22	2.3	6.09	H041	80A6	1000
144.5	24	2.2	6.09	H041	71C6	1000
144.2	24	3.5	6.52	HA32	80A6	1335
139.2	24	2.9	20.26	HA32	71A2	1351
137.7	24	2.8	20.26	HA32	63C2	1355
135.0	25	3.3	6.52	HA32	71C6	1364
128.2	27	3.9	7.33	H051	80A6	2500
126.2	27	3.3	10.94	HA32	71B4	1396
122.6	28	1.9	7.67	H041	80A6	1000
121.3	29	3.3	7.75	HA61	80A6	4215
120.0	29	3.6	7.33	H051	71C6	2500
115.9	30	2.7	8.11	HA32	80A6	1436
114.9	28	2.2	24.55	HA32	71A2	1440
114.8	30	1.7	7.67	H041	71C6	1000
113.7	29	2.2	24.55	HA32	63C2	1445
112.2	31	3.4	8.38	H051	80A6	2500
111.7	31	1.4	7.88	HA51	71C6	2894
108.5	32	2.5	8.11	HA32	71C6	1468
107.4	32	1.8	8.75	H041	80A6	1000
105.1	33	3.2	8.38	H051	71C6	2500
104.2	33	2.5	13.25	HA32	71B4	1488
100.6	34	1.7	8.75	H041	71C6	1000
99.2	35	4.0	8.87	H032	71C6	5404
92.7	37	4.0	10.14	H032	80A6	5500
92.3	35	1.7	30.55	HA32	71A2	1549
92.3	35	3.0	30.55	HA42	71A2	3260
91.3	36	1.7	30.55	HA32	63C2	1554
91.3	36	2.9	30.55	HA42	63C2	3272
88.1	39	1.9	10.67	HA61	80A6	4500
86.8	39	3.7	10.14	H032	71C6	5500
86.0	40	2.4	10.94	HA32	80A6	1586
86.0	40	4.0	10.94	HA42	80A6	3339
85.7	38	3.9	32.89	H032	71A2	5500
83.7	41	2.0	16.49	HA32	71B4	1600
83.7	41	3.5	16.49	HA42	71B4	3369
80.5	43	2.2	10.94	HA32	71C6	1621
80.5	43	3.7	10.94	HA42	71C6	3413
79.9	43	3.6	11.76	H032	80A6	5500
79.6	41	1.6	35.44	HA32	71A2	1627

5.1 H/HA GEARED MOTORS (50Hz)

0.37 kW

n2 [rpm]	M2 [Nm]	fs	i	Gear reducer	Motor	Fr2 [N]
79.6	41	2.7	35.44	HA42	71A2	3426
78.7	42	1.6	35.44	HA32	63C2	1633
78.7	42	2.7	35.44	HA42	63C2	3438
74.8	46	3.3	11.76	H032	71C6	5500
74.4	44	3.4	37.92	H032	71A2	5500
70.9	48	1.7	13.25	HA32	80A6	1691
70.9	48	3.0	13.25	HA42	80A6	3560
68.5	50	3.6	13.72	H032	80A6	5500
68.1	48	3.1	41.40	H032	71A2	5500
68.1	50	1.8	20.26	HA32	71B4	1714
68.1	50	3.0	20.26	HA42	71B4	3608
66.4	52	1.6	13.25	HA32	71C6	1728
66.4	52	2.8	13.25	HA42	71C6	3639
64.1	53	3.3	13.72	H032	71C6	5500
64.1	53	3.3	14.66	H032	80A6	5500
63.9	51	1.3	44.10	HA32	71A2	1750
63.9	51	2.1	44.10	HA42	71A2	3685
63.3	52	1.3	44.10	HA32	63C2	1757
63.3	52	2.0	44.10	HA42	63C2	3698
60.8	56	3.6	22.68	H032	71B4	5500
60.0	57	3.1	14.66	H032	71C6	5500
59.7	55	2.7	47.25	H032	71A2	5500
59.3	55	3.8	47.53	H042	71A2	6600
57.9	59	3.4	23.83	H032	71B4	5500
57.8	57	1.5	48.75	HA42	71A2	3810
57.2	57	1.5	48.75	HA42	63C2	3824
57.0	60	2.4	16.49	HA42	80A6	3829
56.6	57	4.0	49.80	HA53	71A2	4797
56.2	60	1.4	24.55	HA32	71B4	1827
56.2	60	2.6	24.55	HA42	71B4	3847
56.1	61	3.3	16.77	H032	80A6	5500
56.0	57	3.9	49.80	HA53	63C2	4814
54.9	58	1.3	51.32	HA33	71A2	1841
54.9	58	1.9	51.32	HA43	71A2	3876
54.4	59	1.3	51.32	HA33	63C2	1848
54.4	59	1.9	51.32	HA43	63C2	3890
53.4	64	2.3	16.49	HA42	71C6	3914
52.6	61	2.5	53.59	H033	71A2	5500
52.5	65	3.1	16.77	H032	71C6	5500
52.3	65	3.1	26.39	H032	71B4	5500
52.1	62	2.4	53.59	H033	63C2	5500
52.0	63	3.3	54.25	H042	71A2	6600
51.6	66	3.2	18.20	H032	80A6	5500
49.5	69	3.8	19.00	H042	80A6	6600
48.4	71	3.0	18.20	H032	71C6	5500

5.1 H/HA GEARED MOTORS (50Hz)

0.37 kW

n2 [rpm]	M2 [Nm]	fs	i	Gear reducer	Motor	Fr2 [N]
47.3	68	1.1	59.65	HA33	71A2	1936
47.3	68	1.7	59.65	HA43	71A2	4075
47.2	73	2.9	19.90	H032	80A6	5500
46.8	69	1.1	59.65	HA33	63C2	1943
46.8	69	1.6	59.65	HA43	63C2	4090
46.8	68	3.3	60.25	HA53	71A2	5111
46.5	73	2.7	29.70	H032	71B4	5500
46.5	70	1.4	60.67	HA42	71A2	4098
46.4	74	2.1	20.26	HA42	80A6	4101
46.3	74	3.5	19.00	H042	71C6	6600
46.3	69	3.3	60.25	HA53	63C2	5129
46.0	71	1.4	60.67	HA42	63C2	4113
45.6	70	3.2	61.83	H043	71A2	6600
45.3	75	3.7	30.45	H042	71B4	6600
45.2	75	1.9	30.55	HA42	71B4	4138
45.1	71	3.2	61.83	H043	63C2	6600
44.8	77	3.4	21.00	H042	80A6	6600
44.2	77	2.7	19.90	H032	71C6	5500
43.4	79	2.0	20.26	HA42	71C6	4192
42.2	76	2.0	66.78	H033	71A2	5500
42.0	81	2.5	32.89	H032	71B4	5500
41.9	82	3.2	21.00	H042	71C6	6600
41.8	77	2.0	66.78	H033	63C2	5500
41.4	83	2.5	22.68	H032	80A6	5500
40.6	84	3.2	23.15	H042	80A6	6600
40.5	84	3.3	34.10	H042	71B4	6600
39.4	87	2.4	23.83	H032	80A6	5500
39.0	82	1.4	72.27	HA43	71A2	4300
38.9	87	1.7	35.44	HA42	71B4	4300
38.8	88	2.4	22.68	H032	71C6	5500
38.6	83	1.4	72.27	HA43	63C2	4300
38.3	89	1.8	24.55	HA42	80A6	4300
38.0	90	3.0	23.15	H042	71C6	6600
37.7	85	1.8	74.84	H033	71A2	5500
37.7	85	2.6	74.88	HA53	71A2	5495
37.3	86	1.7	74.84	H033	63C2	5500
37.3	86	2.6	74.88	HA53	63C2	5515
37.0	93	3.2	25.43	HA52	80A6	5530
36.9	93	2.3	23.83	H032	71C6	5500
36.8	87	2.6	76.67	H043	71A2	6600
36.5	93	3.0	37.76	H042	71B4	6600
36.4	93	2.1	37.92	H032	71B4	5500
36.4	88	2.6	76.67	H043	63C2	6600
36.1	95	2.9	26.04	H042	80A6	6600
35.9	96	1.7	24.55	HA42	71C6	4300

5.1 H/HA GEARED MOTORS (50Hz)

0.37 kW

n2 [rpm]	M2 [Nm]	fs	i	Gear reducer	Motor	Fr2 [N]
35.6	96	2.2	26.39	H032	80A6	5500
34.2	100	2.9	27.50	H042	80A6	6600
33.8	101	2.7	26.04	H042	71C6	6600
33.3	103	2.0	26.39	H032	71C6	5500
33.3	102	2.0	41.40	H032	71B4	5500
32.4	99	2.3	87.05	H043	71A2	6600
32.0	107	2.7	27.50	H042	71C6	6600
32.0	100	2.2	87.05	H043	63C2	6600
32.0	100	2.2	88.02	HA53	71A2	5800
32.0	100	3.6	88.02	HA63	71A2	8000
31.7	101	2.2	88.02	HA53	63C2	5820
31.7	101	3.6	88.02	HA63	63C2	8000
31.6	108	1.9	29.70	H032	80A6	5500
31.5	108	2.6	43.75	H042	71B4	6600
31.4	102	1.1	89.94	HA43	71A2	4300
31.4	109	2.9	29.89	HA52	80A6	5836
31.3	108	1.3	44.10	HA42	71B4	4300
31.2	103	3.6	90.51	H053	71A2	8000
31.0	103	1.1	89.94	HA43	63C2	4300
30.9	111	2.6	30.45	H042	80A6	6600
30.8	104	3.6	90.51	H053	63C2	8000
30.8	111	1.3	30.55	HA42	80A6	4300
29.6	116	1.8	29.70	H032	71C6	5500
29.2	116	1.7	47.25	H032	71B4	5500
29.0	117	2.4	47.53	H042	71B4	6600
28.9	119	2.5	30.45	H042	71C6	6600
28.8	119	1.2	30.55	HA42	71C6	4300
28.6	120	1.8	32.89	H032	80A6	5500
28.4	113	1.3	99.27	H033	71A2	5500
28.1	114	1.3	99.27	H033	63C2	5500
27.7	120	2.5	49.80	HA53	71B4	6000
27.6	124	2.4	34.10	H042	80A6	6600
26.9	124	1.2	51.32	HA43	71B4	4300
26.8	128	1.6	32.89	H032	71C6	5500
26.1	123	1.2	108.05	H033	71A2	5500
26.0	132	2.4	36.17	HA52	80A6	6000
26.0	132	3.7	36.17	HA62	80A6	8000
25.9	124	3.0	108.95	H053	71A2	8000
25.8	124	1.2	108.05	H033	63C2	5500
25.8	129	1.6	53.59	H033	71B4	5500
25.8	133	2.2	34.10	H042	71C6	6600
25.6	125	3.0	108.95	H053	63C2	8000
25.4	133	2.1	54.25	H042	71B4	6600
25.3	127	1.8	111.61	HA53	71A2	6000
25.3	127	2.8	111.61	HA63	71A2	8000

5.1 H/HA GEARED MOTORS (50Hz)

0.37 kW

n2 [rpm]	M2 [Nm]	fs	i	Gear reducer	Motor	Fr2 [N]
25.0	128	1.8	111.61	HA53	63C2	6000
25.0	128	2.8	111.61	HA63	63C2	8000
24.9	138	2.1	37.76	H042	80A6	6600
24.8	138	1.5	37.92	H032	80A6	5500
24.6	130	1.7	114.55	H043	71A2	6600
24.6	138	3.6	56.11	H052	71B4	8000
24.4	132	1.7	114.55	H043	63C2	6600
24.1	142	3.6	38.98	H052	80A6	8000
23.5	142	3.5	58.81	H053	71B4	8000
23.3	147	2.0	37.76	H042	71C6	6600
23.2	148	1.4	37.92	H032	71C6	5500
22.9	145	2.1	60.25	HA53	71B4	6000
22.9	145	3.3	60.25	HA63	71B4	8000
22.7	151	1.4	41.40	H032	80A6	5500
22.6	152	3.4	38.98	H052	71C6	8000
22.4	143	1.6	125.69	H043	71A2	6600
22.3	149	2.0	61.83	H043	71B4	6600
22.2	144	1.6	125.69	H043	63C2	6600
21.5	159	1.8	43.75	H042	80A6	6600
21.3	161	1.3	41.40	H032	71C6	5500
20.9	153	2.4	134.76	H053	71A2	8000
20.9	164	1.8	44.95	HA52	80A6	6000
20.9	164	2.8	44.95	HA62	80A6	8000
20.7	161	1.2	66.78	H033	71B4	5500
20.7	165	3.1	45.36	H052	80A6	8000
20.7	155	2.4	134.76	H053	63C2	8000
20.3	158	1.4	138.71	HA53	71A2	6000
20.3	158	2.3	138.71	HA63	71A2	8000
20.1	170	1.7	43.75	H042	71C6	6600
20.1	159	1.4	138.71	HA53	63C2	6000
20.1	159	2.3	138.71	HA63	63C2	8000
19.9	161	1.4	142.04	H043	71A2	6600
19.8	173	1.7	47.53	H042	80A6	6600
19.6	163	1.4	142.04	H043	63C2	6600
19.4	177	2.9	45.36	H052	71C6	8000
19.1	179	2.9	49.13	H052	80A6	8000
19.0	175	2.9	72.75	H053	71B4	8000
18.9	170	3.8	149.51	H063	71A2	12000
18.9	181	1.7	49.78	HA52	80A6	6000
18.9	178	1.8	49.80	HA53	80A6	6000
18.9	181	2.1	49.78	HA62	80A6	8000
18.9	178	2.8	49.80	HA63	80A6	8000
18.5	185	1.6	47.53	H042	71C6	6600
18.4	180	1.7	74.88	HA53	71B4	6000
18.4	180	2.7	74.88	HA63	71B4	8000

5.1 H/HA GEARED MOTORS (50Hz)

0.37 kW

n2 [rpm]	M2 [Nm]	fs	i	Gear reducer	Motor	Fr2 [N]
18.0	185	1.6	76.67	H043	71B4	6600
17.9	191	2.7	49.13	H052	71C6	8000
17.9	179	2.1	157.29	H053	71A2	8000
17.7	181	2.1	157.29	H053	63C2	8000
17.7	190	1.7	49.80	HA53	71C6	6000
17.7	190	2.7	49.80	HA63	71C6	8000
17.3	198	1.5	54.25	H042	80A6	6600
17.3	185	1.2	163.05	HA53	71A2	6000
17.3	185	1.9	163.05	HA63	71A2	8000
17.1	188	1.2	165.38	H043	71A2	6600
17.1	187	1.2	163.05	HA53	63C2	6000
17.1	187	1.9	163.05	HA63	63C2	8000
16.9	190	1.2	165.38	H043	63C2	6600
16.8	205	2.5	56.11	H052	80A6	8000
16.5	194	3.3	170.67	H063	71A2	12000
16.2	211	1.4	54.25	H042	71C6	6600
16.0	210	2.5	58.81	H053	80A6	8000
15.9	210	1.4	87.05	H043	71B4	6600
15.7	218	2.4	56.11	H052	71C6	8000
15.7	212	1.4	88.02	HA53	71B4	6000
15.7	212	2.3	88.02	HA63	71B4	8000
15.6	215	1.5	60.25	HA53	80A6	6000
15.6	215	2.3	60.25	HA63	80A6	8000
15.2	221	1.4	61.83	H043	80A6	6600
15.2	218	2.3	90.51	H053	71B4	8000
15.2	225	1.4	61.87	HA52	80A6	6000
15.2	225	2.0	61.87	HA62	80A6	8000
15.1	212	3.0	186.18	H063	71A2	12000
15.0	224	2.3	58.81	H053	71C6	8000
14.6	228	3.7	94.76	H063	71B4	12000
14.6	230	1.4	60.25	HA53	71C6	6000
14.6	230	2.2	60.25	HA63	71C6	8000
14.5	221	1.7	194.56	H053	71A2	8000
14.3	224	1.7	194.56	H053	63C2	8000
14.2	236	1.3	61.83	H043	71C6	6600
14.1	228	1.6	200.27	HA63	71A2	8000
13.9	230	1.6	200.27	HA63	63C2	8000
13.1	245	2.6	215.21	H063	71A2	12000
13.0	246	1.5	216.38	H053	71A2	8000
12.9	260	2.0	72.75	H053	80A6	8000
12.9	249	1.5	216.38	H053	63C2	8000
12.7	262	1.9	108.95	H053	71B4	8000
12.6	267	1.9	74.88	HA63	80A6	8000
12.4	269	1.8	111.61	HA63	71B4	8000
12.1	277	1.9	72.75	H053	71C6	8000

5.1 H/HA GEARED MOTORS (50Hz)

0.37 kW

n2 [rpm]	M2 [Nm]	fs	i	Gear reducer	Motor	Fr2 [N]
12.0	267	2.4	234.67	H063	71A2	12000
12.0	268	1.3	235.41	HA63	71A2	8000
11.9	270	1.3	235.41	HA63	63C2	8000
11.8	285	1.8	74.88	HA63	71C6	8000
11.7	284	3.0	118.00	H063	71B4	12000
11.0	306	2.9	85.82	H063	80A6	12000
10.7	314	1.6	88.02	HA63	80A6	8000
10.5	304	1.2	267.65	H053	71A2	8000
10.5	305	2.1	268.00	H063	71A2	12000
10.4	323	1.6	90.51	H053	80A6	8000
10.4	307	1.2	267.65	H053	63C2	8000
10.3	327	2.7	85.82	H063	71C6	12000
10.2	324	1.5	134.76	H053	71B4	8000
10.2	326	2.6	135.40	H063	71B4	12000
10.0	336	1.5	88.02	HA63	71C6	8000
9.9	338	2.6	94.76	H063	80A6	12000
9.9	334	1.4	138.71	HA63	71B4	8000
9.9	324	1.1	284.81	HA63	71A2	8000
9.8	327	1.1	284.81	HA63	63C2	8000
9.7	345	1.5	90.51	H053	71C6	8000
9.3	361	2.5	94.76	H063	71C6	12000
9.2	360	2.4	149.51	H063	71B4	12000
8.8	379	1.3	157.29	H053	71B4	8000
8.6	389	1.4	108.95	H053	80A6	8000
8.5	392	1.2	163.05	HA63	71B4	8000
8.4	398	1.3	111.61	HA63	80A6	8000
8.1	415	1.3	108.95	H053	71C6	8000
8.1	411	2.1	170.67	H063	71B4	12000
8.0	421	2.1	118.00	H063	80A6	12000
7.5	450	2.0	118.00	H063	71C6	12000
7.4	448	1.9	186.18	H063	71B4	12000
6.9	483	1.8	135.40	H063	80A6	12000
6.6	507	3.7	142.15	H083	80A6	18000
6.5	516	1.7	135.40	H063	71C6	12000
6.4	518	1.6	215.21	H063	71B4	12000
6.3	534	1.7	149.51	H063	80A6	12000
6.1	552	3.4	154.76	H083	80A6	18000
5.9	570	1.6	149.51	H063	71C6	12000
5.9	565	1.5	234.67	H063	71B4	12000
5.8	579	3.3	162.35	H083	80A6	18000
5.5	609	1.5	170.67	H063	80A6	12000
5.2	651	1.4	170.67	H063	71C6	12000
5.2	639	3.0	179.13	H083	80A6	18000
5.1	645	1.3	268.00	H063	71B4	12000
5.0	664	1.3	186.18	H063	80A6	12000

5.1 H/HA GEARED MOTORS (50Hz)

0.37 kW

n2 [rpm]	M2 [Nm]	fs	i	Gear reducer	Motor	Fr2 [N]
4.8	696	2.7	195.07	H083	80A6	18000
4.7	710	1.3	186.18	H063	71C6	12000
4.2	795	2.4	222.78	H083	80A6	18000

0.55 kW

n2 [rpm]	M2 [Nm]	fs	i	Gear reducer	Motor	Fr2 [N]
1102.0	4	3.2	2.55	HA31	71B2	484
954.3	5	2.9	2.94	HA31	71B2	508
954.3	5	3.6	2.94	HA41	71B2	514
884.6	6	2.7	3.18	HA31	71B2	521
837.0	6	2.6	3.36	HA31	71B2	531
726.7	7	2.3	3.87	HA31	71B2	556
700.0	7	3.4	2.00	H041	80A4	761
685.0	7	3.4	2.00	H041	71C4	766
666.8	7	2.1	4.21	HA31	71B2	573
647.0	8	3.3	1.44	H041	80B6	778
642.1	8	3.3	1.45	HA41	80B6	586
591.6	8	2.0	4.75	HA31	71B2	596
591.6	8	2.7	4.75	HA41	71B2	603
562.0	9	3.9	5.00	H041	71B2	814
551.0	9	1.9	5.10	HA31	71B2	610
550.0	9	3.2	2.55	H041	80A4	817
549.0	9	2.0	2.55	HA31	80A4	611
538.2	9	3.2	2.55	H041	71C4	822
537.3	9	2.0	2.55	HA31	71C4	615
515.8	10	3.0	2.71	H041	80A4	833
515.2	10	1.8	5.45	HA31	71B2	624
515.2	10	2.4	5.45	HA41	71B2	631
515.2	10	3.9	5.45	HA51	71B2	1739
510.9	10	3.9	5.50	H041	71B2	837
504.7	10	3.0	2.71	H041	71C4	838
475.5	11	1.9	2.94	HA31	80A4	641
475.5	11	2.3	2.94	HA41	80A4	648
475.5	11	3.7	2.94	HA51	80A4	1786
465.3	11	1.8	2.94	HA31	71C4	646
465.3	11	2.3	2.94	HA41	71C4	653
465.3	11	3.7	2.94	HA51	71C4	1799
465.0	11	2.4	2.00	H041	80B6	858
461.3	11	3.5	6.09	H041	71B2	862
450.8	11	3.5	3.11	H041	80A4	866
446.0	11	1.6	6.30	HA31	71B2	655
441.2	12	3.5	3.11	H041	71C4	872
440.7	12	1.7	3.18	HA31	80A4	657

5.1 H/HA GEARED MOTORS (50Hz)

0.55 kW

n2 [rpm]	M2 [Nm]	fs	i	Gear reducer	Motor	Fr2 [N]
431.3	12	1.7	3.18	HA31	71C4	662
417.0	12	1.6	3.36	HA31	80A4	670
408.1	12	1.6	3.36	HA31	71C4	674
390.2	13	3.4	3.59	H041	80A4	903
381.8	13	3.4	3.59	H041	71C4	908
366.5	13	2.8	7.67	H041	71B2	921
365.4	14	2.2	2.55	H041	80B6	919
364.7	14	1.4	2.55	HA31	80B6	700
362.1	14	1.5	3.87	HA31	80A4	702
356.8	14	1.2	7.88	HA31	71B2	705
356.8	14	1.4	7.88	HA41	71B2	713
356.8	14	2.2	7.88	HA51	71B2	1965
354.3	14	1.5	3.87	HA31	71C4	707
342.6	15	2.1	2.71	H041	80B6	936
333.3	15	2.9	4.20	H041	80A4	944
332.2	15	1.4	4.21	HA31	80A4	722
326.2	16	2.9	4.20	H041	71C4	950
325.1	16	1.3	4.21	HA31	71C4	728
321.1	15	2.7	8.75	H041	71B2	956
315.8	16	1.3	2.94	HA31	80B6	735
315.8	16	1.6	2.94	HA41	80B6	743
315.8	16	2.6	2.94	HA51	80B6	2047
299.5	17	2.4	3.11	H041	80B6	972
294.7	17	1.3	4.75	HA31	80A4	752
294.7	17	1.7	4.75	HA41	80A4	760
294.7	17	2.9	4.75	HA51	80A4	2095
288.4	18	1.2	4.75	HA31	71C4	757
288.4	18	1.7	4.75	HA41	71C4	766
288.4	18	2.8	4.75	HA51	71C4	2110
280.0	18	2.5	5.00	H041	80A4	990
274.0	19	2.4	5.00	H041	71C4	996
268.6	19	1.2	5.10	HA31	71C4	775
259.2	20	2.4	3.59	H041	80B6	1000
256.9	19	3.6	10.94	HA32	71B2	1101
256.7	20	1.5	5.45	HA41	80A4	796
256.7	20	2.5	5.45	HA51	80A4	2194
254.5	20	2.5	5.50	H041	80A4	1000
251.2	20	1.5	5.45	HA41	71C4	802
251.2	20	2.5	5.45	HA51	71C4	2209
249.1	20	2.4	5.50	H041	71C4	1000
229.9	22	2.3	6.09	H041	80A4	1000
224.9	23	2.2	6.09	H041	71C4	1000
221.4	23	2.0	4.20	H041	80B6	1000
214.8	23	3.4	6.52	HA32	80A4	1169
212.1	23	2.6	13.25	HA32	71B2	1174

5.1 H/HA GEARED MOTORS (50Hz)

0.55 kW

n2 [rpm]	M2 [Nm]	fs	i	Gear reducer	Motor	Fr2 [N]
210.2	24	3.3	6.52	HA32	71C4	1177
198.0	26	3.9	4.70	H032	80B6	4321
195.8	26	2.0	4.75	HA51	80B6	2401
195.0	26	3.8	4.77	H051	80B6	2500
190.9	27	3.7	7.33	H051	80A4	2500
186.8	27	3.7	7.33	H051	71C4	2500
186.0	28	1.7	5.00	H041	80B6	1000
182.6	28	1.8	7.67	H041	80A4	1000
180.6	28	3.2	7.75	HA61	80A4	3691
178.7	29	1.8	7.67	H041	71C4	1000
177.1	29	3.6	5.25	H051	80B6	2500
174.0	29	1.4	7.88	HA51	71C4	2497
172.9	29	2.9	5.38	HA32	80B6	1256
172.6	29	2.6	8.11	HA32	80A4	1257
170.5	30	1.7	5.45	HA51	80B6	2514
170.4	29	2.1	16.49	HA32	71B2	1263
170.4	29	3.7	16.49	HA42	71B2	2658
169.1	30	1.7	5.50	H041	80B6	1000
168.9	30	2.5	8.11	HA32	71C4	1266
167.2	30	3.3	8.38	H051	80A4	2500
163.6	31	3.2	8.38	H051	71C4	2500
160.0	32	1.7	8.75	H041	80A4	1000
159.8	32	3.3	5.82	H051	80B6	2500
156.6	33	1.7	8.75	H041	71C4	1000
154.5	33	4.0	8.87	H032	71C4	4641
152.7	34	1.6	6.09	H041	80B6	1000
149.3	34	3.2	6.23	H032	80B6	4682
142.7	36	2.4	6.52	HA32	80B6	1339
138.7	35	1.9	20.26	HA32	71B2	1352
138.7	35	3.2	20.26	HA42	71B2	2847
138.0	37	3.8	10.14	H032	80A4	4789
135.1	37	3.7	10.14	H032	71C4	4818
131.3	39	1.8	10.67	HA61	80A4	4106
128.0	39	2.3	10.94	HA32	80A4	1389
128.0	39	3.8	10.94	HA42	80A4	2924
126.8	41	2.6	7.33	H051	80B6	2500
125.3	40	2.2	10.94	HA32	71C4	1399
125.3	40	3.7	10.94	HA42	71C4	2945
123.9	39	3.8	22.68	H032	71B2	4948
121.3	42	1.2	7.67	H041	80B6	1000
120.0	43	2.2	7.75	HA61	80B6	4230
119.8	43	3.1	7.76	H032	80B6	4974
119.0	42	3.4	11.76	H032	80A4	4987
117.9	41	3.6	23.83	H032	71B2	5016
116.5	43	3.3	11.76	H032	71C4	5016

5.1 H/HA GEARED MOTORS (50Hz)

0.55 kW

n2 [rpm]	M2 [Nm]	fs	i	Gear reducer	Motor	Fr2 [N]
114.7	44	1.8	8.11	HA32	80B6	1441
114.7	44	3.1	8.11	HA42	80B6	3033
114.5	43	1.5	24.55	HA32	71B2	1442
114.5	43	2.7	24.55	HA42	71B2	3035
111.0	46	2.3	8.38	H051	80B6	2500
111.0	46	3.9	8.38	H061	80B6	3700
106.5	46	3.3	26.39	H032	71B2	5156
105.7	48	1.7	13.25	HA32	80A4	1481
105.7	48	2.9	13.25	HA42	80A4	3117
104.9	49	2.8	8.87	H032	80B6	5154
103.4	49	1.6	13.25	HA32	71C4	1491
103.4	49	2.9	13.25	HA42	71C4	3140
102.0	49	3.4	13.72	H032	80A4	5197
99.9	50	3.4	13.72	H032	71C4	5226
95.5	53	3.2	14.66	H032	80A4	5288
94.6	51	2.9	29.70	H032	71B2	5320
93.5	54	3.2	14.66	H032	71C4	5317
92.3	53	4.0	30.45	H042	71B2	6600
92.0	53	1.1	30.55	HA32	71B2	1551
92.0	53	2.0	30.55	HA42	71B2	3264
91.7	56	2.6	10.14	H032	80B6	5338
87.2	59	1.2	10.67	HA61	80B6	4500
85.4	57	2.6	32.89	H032	71B2	5463
85.0	60	1.6	10.94	HA32	80B6	1592
85.0	60	2.6	10.94	HA42	80B6	3351
84.9	59	2.4	16.49	HA42	80A4	3353
83.5	60	3.1	16.77	H032	80A4	5474
83.1	61	2.3	16.49	HA42	71C4	3377
82.4	59	3.6	34.10	H042	71B2	6600
81.7	62	3.1	16.77	H032	71C4	5500
79.3	61	1.1	35.44	HA32	71B2	1629
79.3	61	1.8	35.44	HA42	71B2	3430
79.1	64	2.4	11.76	H032	80B6	5500
76.9	66	3.1	18.20	H032	80A4	5500
75.3	67	3.0	18.20	H032	71C4	5500
74.4	65	3.2	37.76	H042	71B2	6600
74.1	66	2.3	37.92	H032	71B2	5500
73.7	68	3.7	19.00	H042	80A4	6600
72.1	70	3.6	19.00	H042	71C4	6600
70.4	72	2.8	19.90	H032	80A4	5500
70.2	73	2.0	13.25	HA42	80B6	3572
69.1	73	2.1	20.26	HA42	80A4	3591
68.9	73	2.7	19.90	H032	71C4	5500
68.5	74	3.5	13.57	H042	80B6	6600
68.4	74	3.9	20.46	HA52	80A4	4504

5.1 H/HA GEARED MOTORS (50Hz)

0.55 kW

n2 [rpm]	M2 [Nm]	fs	i	Gear reducer	Motor	Fr2 [N]
67.9	72	2.1	41.40	H032	71B2	5500
67.8	75	2.4	13.72	H032	80B6	5500
67.6	75	2.0	20.26	HA42	71C4	3617
66.7	76	3.3	21.00	H042	80A4	6600
65.2	77	3.2	21.00	H042	71C4	6600
64.2	76	2.8	43.75	H042	71B2	6600
64.1	79	3.7	14.50	HA52	80B6	4602
63.7	76	1.4	44.10	HA42	71B2	3689
63.5	80	2.2	14.66	H032	80B6	5500
61.7	82	2.4	22.68	H032	80A4	5500
60.5	83	3.1	23.15	H042	80A4	6600
60.4	83	2.4	22.68	H032	71C4	5500
59.5	82	1.8	47.25	H032	71B2	5500
59.2	85	3.1	23.15	H042	71C4	6600
59.1	82	2.6	47.53	H042	71B2	6600
58.7	86	2.3	23.83	H032	80A4	5500
58.3	87	3.0	15.96	H042	80B6	6600
57.6	84	1.0	48.75	HA42	71B2	3815
57.5	88	2.3	23.83	H032	71C4	5500
57.0	88	1.8	24.55	HA42	80A4	3828
56.4	90	1.6	16.49	HA42	80B6	3843
56.4	84	2.7	49.80	HA53	71B2	4802
55.8	90	1.7	24.55	HA42	71C4	3856
55.5	92	2.2	16.77	H032	80B6	5500
55.1	92	3.1	25.43	HA52	80A4	4842
55.0	93	3.4	16.91	HA52	80B6	4844
54.8	87	1.3	51.32	HA43	71B2	3881
53.8	94	2.8	26.04	H042	80A4	6600
53.0	95	2.1	26.39	H032	80A4	5500
52.6	96	2.7	26.04	H042	71C4	6600
52.4	91	1.7	53.59	H033	71B2	5500
51.9	97	2.1	26.39	H032	71C4	5500
51.8	94	2.2	54.25	H042	71B2	6600
51.1	100	2.1	18.20	H032	80B6	5500
50.9	99	2.8	27.50	H042	80A4	6600
50.1	97	3.8	56.11	H052	71B2	8000
49.8	101	2.8	27.50	H042	71C4	6600
48.9	104	2.5	19.00	H042	80B6	6600
47.8	100	3.8	58.81	H053	71B2	8000
47.1	107	1.9	29.70	H032	80A4	5500
47.1	101	1.1	59.65	HA43	71B2	4080
46.8	108	2.8	29.89	HA52	80A4	5110
46.7	109	1.9	19.90	H032	80B6	5500
46.6	102	2.2	60.25	HA53	71B2	5117
46.6	102	3.5	60.25	HA63	71B2	7553

5.1 H/HA GEARED MOTORS (50Hz)

0.55 kW

n2 [rpm]	M2 [Nm]	fs	i	Gear reducer	Motor	Fr2 [N]
46.1	109	1.8	29.70	H032	71C4	5500
46.0	110	2.6	30.45	H042	80A4	6600
45.8	110	1.3	30.55	HA42	80A4	4118
45.5	112	2.7	20.46	HA52	80B6	5162
45.4	105	2.1	61.83	H043	71B2	6600
45.0	112	2.5	30.45	H042	71C4	6600
44.9	112	1.2	30.55	HA42	71C4	4148
44.3	115	2.3	21.00	H042	80B6	6600
42.6	118	1.7	32.89	H032	80A4	5500
42.1	113	1.3	66.78	H033	71B2	5500
41.7	121	1.7	32.89	H032	71C4	5500
41.1	123	2.3	34.10	H042	80A4	6600
41.0	124	1.7	22.68	H032	80B6	5500
40.2	127	2.2	23.15	H042	80B6	6600
40.2	126	2.2	34.10	H042	71C4	6600
39.0	131	1.6	23.83	H032	80B6	5500
38.7	130	2.3	36.17	HA52	80A4	5445
38.7	130	3.6	36.17	HA62	80A4	8000
38.6	123	3.0	72.75	H053	71B2	8000
37.6	135	3.6	24.71	H052	80B6	8000
37.5	127	1.2	74.84	H033	71B2	5500
37.5	127	1.8	74.88	HA53	71B2	5502
37.5	127	2.8	74.88	HA63	71B2	8000
37.1	136	2.1	37.76	H042	80A4	6600
36.9	137	1.5	37.92	H032	80A4	5500
36.6	130	1.7	76.67	H043	71B2	6600
36.6	139	2.1	25.43	HA52	80B6	5549
36.6	139	3.2	25.43	HA62	80B6	8000
36.3	139	2.0	37.76	H042	71C4	6600
36.1	140	1.4	37.92	H032	71C4	5500
35.9	140	3.5	38.98	H052	80A4	8000
35.7	143	1.9	26.04	H042	80B6	6600
35.5	143	3.6	26.18	H052	80B6	8000
35.2	145	1.5	26.39	H032	80B6	5500
35.1	143	3.4	38.98	H052	71C4	8000
33.8	149	1.3	41.40	H032	80A4	5500
33.8	151	2.0	27.50	H042	80B6	6600
33.1	152	1.3	41.40	H032	71C4	5500
32.7	156	3.3	28.44	H052	80B6	8000
32.3	148	1.5	87.05	H043	71B2	6600
32.0	158	1.8	43.75	H042	80A4	6600
31.9	149	1.5	88.02	HA53	71B2	5807
31.9	149	2.4	88.02	HA63	71B2	8000
31.3	161	1.7	43.75	H042	71C4	6600
31.1	162	1.7	44.95	HA52	80A4	5855

5.1 H/HA GEARED MOTORS (50Hz)

0.55 kW

n2 [rpm]	M2 [Nm]	fs	i	Gear reducer	Motor	Fr2 [N]
31.1	164	1.9	29.89	HA52	80B6	5857
31.1	164	2.9	29.89	HA62	80B6	8000
31.1	162	2.7	44.95	HA62	80A4	8000
31.0	153	2.4	90.51	H053	71B2	8000
30.9	163	3.0	45.36	H052	80A4	8000
30.5	167	1.8	30.45	H042	80B6	6600
30.2	167	2.9	45.36	H052	71C4	8000
29.7	161	4.0	94.76	H063	71B2	12000
29.6	170	1.2	47.25	H032	80A4	5500
29.5	171	1.6	47.53	H042	80A4	6600
29.5	173	3.0	31.52	H052	80B6	8000
28.8	175	1.6	47.53	H042	71C4	6600
28.5	177	2.8	49.13	H052	80A4	8000
28.2	181	2.8	33.00	H052	80B6	8000
28.1	179	1.7	49.78	HA52	80A4	6000
28.1	176	1.7	49.80	HA53	80A4	6000
28.1	179	2.1	49.78	HA62	80A4	8000
28.1	176	2.7	49.80	HA63	80A4	8000
27.9	181	2.7	49.13	H052	71C4	8000
27.5	179	1.7	49.80	HA53	71C4	6000
27.5	179	2.7	49.80	HA63	71C4	8000
27.3	187	1.6	34.10	H042	80B6	6600
25.8	195	1.4	54.25	H042	80A4	6600
25.8	185	2.0	108.95	H053	71B2	8000
25.7	198	1.6	36.17	HA52	80B6	6000
25.7	198	2.5	36.17	HA62	80B6	8000
25.3	200	1.4	54.25	H042	71C4	6600
25.2	189	1.2	111.61	HA53	71B2	6000
25.2	189	1.9	111.61	HA63	71B2	8000
24.9	202	2.4	56.11	H052	80A4	8000
24.6	207	1.4	37.76	H042	80B6	6600
24.5	194	1.2	114.55	H043	71B2	6600
24.4	207	2.4	56.11	H052	71C4	8000
23.9	213	2.4	38.98	H052	80B6	8000
23.8	207	2.4	58.81	H053	80A4	8000
23.8	200	3.2	118.00	H063	71B2	12000
23.3	212	2.4	58.81	H053	71C4	8000
23.2	212	1.4	60.25	HA53	80A4	6000
23.2	212	2.3	60.25	HA63	80A4	8000
22.7	217	1.4	60.25	HA53	71C4	6000
22.7	217	2.2	60.25	HA63	71C4	8000
22.6	218	1.4	61.83	H043	80A4	6600
22.6	223	1.3	61.87	HA52	80A4	6000
22.6	223	2.0	61.87	HA62	80A4	8000
22.2	223	1.3	61.83	H043	71C4	6600

5.1 H/HA GEARED MOTORS (50Hz)

0.55 kW

n2 [rpm]	M2 [Nm]	fs	i	Gear reducer	Motor	Fr2 [N]
20.9	228	1.6	134.76	H053	71B2	8000
20.8	230	2.8	135.40	H063	71B2	12000
20.7	246	1.9	44.95	HA62	80B6	8000
20.5	248	2.1	45.36	H052	80B6	8000
20.3	235	1.5	138.71	HA63	71B2	8000
20.2	252	3.5	46.06	H062	80B6	12000
19.2	257	1.9	72.75	H053	80A4	8000
18.9	269	1.9	49.13	H052	80B6	8000
18.8	262	1.9	72.75	H053	71C4	8000
18.8	254	2.5	149.51	H063	71B2	12000
18.7	273	1.4	49.78	HA62	80B6	8000
18.7	267	1.9	49.80	HA63	80B6	8000
18.7	264	1.8	74.88	HA63	80A4	8000
18.3	270	1.8	74.88	HA63	71C4	8000
17.9	267	1.4	157.29	H053	71B2	8000
17.2	276	1.3	163.05	HA63	71B2	8000
16.6	307	1.7	56.11	H052	80B6	8000
16.5	289	2.2	170.67	H063	71B2	12000
16.3	303	2.8	85.82	H063	80A4	12000
16.0	309	2.7	85.82	H063	71C4	12000
15.9	310	1.5	88.02	HA63	80A4	8000
15.8	315	1.7	58.81	H053	80B6	8000
15.6	317	1.5	88.02	HA63	71C4	8000
15.5	319	1.6	90.51	H053	80A4	8000
15.4	323	1.6	60.25	HA63	80B6	8000
15.1	326	1.5	90.51	H053	71C4	8000
15.1	316	2.0	186.18	H063	71B2	12000
15.0	339	1.4	61.87	HA62	80B6	8000
14.8	334	2.5	94.76	H063	80A4	12000
14.5	341	2.5	94.76	H063	71C4	12000
14.4	330	1.1	194.56	H053	71B2	8000
13.1	365	1.7	215.21	H063	71B2	12000
12.9	384	1.3	108.95	H053	80A4	8000
12.8	390	1.3	72.75	H053	80B6	8000
12.6	393	1.3	108.95	H053	71C4	8000
12.5	394	1.2	111.61	HA63	80A4	8000
12.4	402	1.3	74.88	HA63	80B6	8000
12.3	402	1.2	111.61	HA63	71C4	8000
12.0	398	1.6	234.67	H063	71B2	12000
11.9	416	2.0	118.00	H063	80A4	12000
11.6	425	2.0	118.00	H063	71C4	12000
10.8	460	1.9	85.82	H063	80B6	12000
10.5	454	1.4	268.00	H063	71B2	12000
10.3	478	1.8	135.40	H063	80A4	12000
10.1	488	1.7	135.40	H063	71C4	12000

5.1 H/HA GEARED MOTORS (50Hz)

0.55 kW

n2 [rpm]	M2 [Nm]	fs	i	Gear reducer	Motor	Fr2 [N]
9.8	508	1.8	94.76	H063	80B6	12000
9.8	501	3.6	142.15	H083	80A4	18000
9.5	526	3.6	98.09	H083	80B6	18000
9.4	527	1.6	149.51	H063	80A4	12000
9.2	539	1.6	149.51	H063	71C4	12000
9.0	546	3.3	154.76	H083	80A4	18000
8.6	573	3.1	162.35	H083	80A4	18000
8.2	602	1.4	170.67	H063	80A4	12000
8.2	605	3.1	112.78	H083	80B6	18000
8.0	615	1.4	170.67	H063	71C4	12000
7.9	633	1.4	118.00	H063	80B6	12000
7.8	632	2.8	179.13	H083	80A4	18000
7.5	657	1.3	186.18	H063	80A4	12000
7.5	667	2.8	124.44	H083	80B6	18000
7.4	671	1.3	186.18	H063	71C4	12000
7.2	688	2.6	195.07	H083	80A4	18000
6.5	762	2.5	142.15	H083	80B6	18000
6.3	786	2.3	222.78	H083	80A4	18000
6.0	830	2.3	154.76	H083	80B6	18000
5.7	871	2.2	162.35	H083	80B6	18000
5.2	961	2.0	179.13	H083	80B6	18000
4.8	1046	1.8	195.07	H083	80B6	18000
4.2	1195	1.6	222.78	H083	80B6	18000

0.75 kW

n2 [rpm]	M2 [Nm]	fs	i	Gear reducer	Motor	Fr2 [N]
1420.0	5	4.0	2.00	H041	80A2	607
1400.0	5	3.9	2.00	H041	71C2	610
1115.7	6	3.7	2.55	H041	80A2	653
1113.7	6	2.4	2.55	HA31	80A2	483
1100.0	6	3.7	2.55	H041	71C2	656
1098.0	6	2.3	2.55	HA31	71C2	485
1046.3	6	3.5	2.71	H041	80A2	666
1031.6	6	3.5	2.71	H041	71C2	669
994.8	7	3.6	1.44	H041	80B4	675
987.4	7	3.6	1.45	HA41	80B4	508
964.5	7	2.2	2.94	HA31	80A2	506
964.5	7	2.7	2.94	HA41	80A2	512
950.9	7	2.1	2.94	HA31	71C2	509
950.9	7	2.7	2.94	HA41	71C2	514
884.6	8	2.0	3.18	HA31	80A2	521
881.5	8	2.0	3.18	HA31	71C2	522
846.0	8	1.9	3.36	HA31	80A2	529

5.1 H/HA GEARED MOTORS (50Hz)

0.75 kW

n2 [rpm]	M2 [Nm]	fs	i	Gear reducer	Motor	Fr2 [N]
834.0	8	1.9	3.36	HA31	71C2	531
783.1	9	3.9	3.59	H041	80A2	726
780.3	9	3.9	3.59	H041	71C2	727
734.5	9	1.7	3.87	HA31	80A2	554
724.1	9	1.7	3.87	HA31	71C2	557
715.0	10	2.6	2.00	H041	80B4	744
676.2	10	3.4	4.20	H041	80A2	758
673.9	10	1.6	4.21	HA31	80A2	571
666.7	10	3.4	4.20	H041	71C2	761
664.4	10	1.6	4.21	HA31	71C2	573
653.9	11	2.4	1.44	H041	90S6	763
649.0	11	3.9	1.45	HA51	90S6	1610
640.0	11	2.4	1.44	H041	80C6	767
635.2	11	2.4	1.45	HA41	80C6	588
635.2	11	3.8	1.45	HA51	80C6	1622
597.9	11	1.5	4.75	HA31	80A2	594
597.9	11	2.0	4.75	HA41	80A2	601
597.9	11	3.3	4.75	HA51	80A2	1655
589.5	11	1.5	4.75	HA31	71C2	597
589.5	11	2.0	4.75	HA41	71C2	603
589.5	11	3.3	4.75	HA51	71C2	1663
568.0	12	2.9	5.00	H041	80A2	796
560.0	12	2.8	5.00	H041	71C2	800
550.0	13	2.4	2.55	H041	80B4	802
549.0	12	1.4	5.10	HA31	71C2	611
549.0	13	1.5	2.55	HA31	80B4	611
526.8	13	2.3	2.71	H041	80B4	811
520.7	13	1.7	5.45	HA41	80A2	629
520.7	13	2.9	5.45	HA51	80A2	1733
516.4	13	2.9	5.50	H041	80A2	818
513.3	13	1.3	5.45	HA31	71C2	625
513.3	13	1.7	5.45	HA41	71C2	632
513.3	13	2.9	5.45	HA51	71C2	1741
509.1	13	2.8	5.50	H041	71C2	821
475.5	15	1.4	2.94	HA31	80B4	641
475.5	15	1.7	2.94	HA41	80B4	648
475.5	15	2.7	2.94	HA51	80B4	1786
470.0	15	1.8	2.00	H041	90S6	837
461.3	15	2.6	6.09	H041	80A2	844
460.5	15	2.7	3.11	H041	80B4	842
460.0	15	1.7	2.00	H041	80C6	842
459.7	15	2.6	6.09	H041	71C2	845
444.4	15	1.1	6.30	HA31	71C2	656
442.4	16	4.0	2.13	H051	90S6	2181
440.7	16	1.3	3.18	HA31	80B4	657

5.1 H/HA GEARED MOTORS (50Hz)

0.75 kW

n2 [rpm]	M2 [Nm]	fs	i	Gear reducer	Motor	Fr2 [N]
435.8	15	3.9	6.52	HA32	80A2	923
432.9	16	3.9	2.13	H051	80C6	2195
429.6	15	3.9	6.52	HA32	71C2	928
417.0	17	1.2	3.36	HA31	80B4	670
390.2	18	2.5	3.59	H041	80B4	881
370.4	18	2.1	7.67	H041	80A2	896
369.3	19	1.7	2.55	H041	90S6	893
366.5	18	3.7	7.75	HA61	80A2	2916
365.2	18	2.0	7.67	H041	71C2	899
361.4	19	1.6	2.55	H041	80C6	898
357.8	20	3.7	2.57	H051	80C6	2328
357.8	20	3.7	2.57	H051	90S6	2328
355.6	19	1.6	7.88	HA51	71C2	1968
350.2	19	3.0	8.11	HA32	80A2	993
345.2	19	2.9	8.11	HA32	71C2	998
339.1	20	3.8	8.38	H051	80A2	2370
338.9	21	1.5	2.71	H041	80C6	913
338.9	21	1.5	2.71	H041	90S6	913
334.3	20	3.7	8.38	H051	71C2	2380
333.3	21	2.2	4.20	H041	80B4	918
324.6	21	2.0	8.75	H041	80A2	928
320.0	21	2.0	8.75	H041	71C2	931
319.2	22	1.9	2.94	HA51	90S6	2040
312.5	22	1.9	2.94	HA51	80C6	2054
296.8	24	3.6	3.17	H051	90S6	2463
296.3	24	1.8	3.11	H041	80C6	945
296.3	24	1.8	3.11	H041	90S6	945
294.7	24	1.3	4.75	HA41	80B4	760
294.7	24	2.1	4.75	HA51	80B4	2095
290.5	24	3.5	3.17	H051	80C6	2480
280.0	25	1.8	5.00	H041	80B4	960
272.4	26	3.9	5.25	H051	80B4	2500
266.3	25	2.1	10.67	HA61	80A2	3243
265.8	26	3.1	5.38	HA32	80B4	1089
262.2	27	1.9	5.45	HA51	80B4	2178
262.0	27	1.8	3.59	H041	90S6	974
260.0	27	1.9	5.50	H041	80B4	977
259.7	26	2.6	10.94	HA32	80A2	1097
256.4	27	1.7	3.59	H041	80C6	980
256.0	26	2.6	10.94	HA32	71C2	1102
254.9	28	3.4	3.69	H051	90S6	2500
249.5	28	3.4	3.69	H051	80C6	2500
240.6	29	3.5	5.82	H051	80B4	2500
238.9	28	3.9	11.76	H032	80A2	4024
238.1	28	3.9	11.76	H032	71C2	4028

5.1 H/HA GEARED MOTORS (50Hz)

0.75 kW

n2 [rpm]	M2 [Nm]	fs	i	Gear reducer	Motor	Fr2 [N]
234.8	30	1.7	6.09	H041	80B4	1000
230.0	31	3.1	4.00	H051	80C6	2500
230.0	31	3.1	4.00	H051	90S6	2500
224.7	31	3.4	6.23	H032	80B4	4083
219.0	32	1.5	4.20	H041	80C6	1000
219.0	32	1.5	4.20	H041	90S6	1000
214.8	32	2.5	6.52	HA32	80B4	1169
214.4	33	3.5	4.38	HA61	90S6	3486
214.3	31	1.9	13.25	HA32	80A2	1170
214.3	31	3.4	13.25	HA42	80A2	2462
211.3	31	1.9	13.25	HA32	71C2	1175
211.3	31	3.3	13.25	HA42	71C2	2474
209.8	33	3.5	4.38	HA61	80C6	3511
207.0	32	4.0	13.72	H032	80A2	4188
204.1	33	3.9	13.72	H032	71C2	4205
200.2	35	2.9	4.70	H032	90S6	4211
197.1	36	2.8	4.77	H051	90S6	2500
195.9	35	2.8	4.70	H032	80C6	4236
195.0	36	2.8	7.33	H051	80B4	2500
193.7	36	1.4	4.75	HA51	80C6	2409
193.7	36	1.4	4.75	HA51	90S6	2409
192.9	36	2.7	4.77	H051	80C6	2500
191.7	35	3.7	14.66	H032	80A2	4278
191.0	35	3.7	14.66	H032	71C2	4282
188.0	37	1.3	5.00	H041	90S6	1000
184.5	38	2.4	7.75	HA61	80B4	3665
182.6	38	1.3	7.67	H041	80B4	1000
180.4	38	3.3	7.76	H032	80B4	4336
175.2	40	2.6	5.25	H051	80C6	2500
175.2	40	2.6	5.25	H051	90S6	2500
172.6	40	1.9	8.11	HA32	80B4	1257
172.6	40	3.3	8.11	HA42	80B4	2647
172.2	39	1.6	16.49	HA32	80A2	1258
172.2	39	2.7	16.49	HA42	80A2	2649
171.0	41	2.1	5.38	HA32	80C6	1261
171.0	41	3.6	5.38	HA42	80C6	2655
171.0	41	3.6	5.38	HA42	90S6	2655
169.8	39	1.5	16.49	HA32	71C2	1264
169.8	39	2.7	16.49	HA42	71C2	2661
168.7	42	1.3	5.45	HA51	80C6	2523
168.7	42	1.3	5.45	HA51	90S6	2523
167.6	40	3.6	16.77	H032	80A2	4437
167.3	42	1.3	5.50	H041	80C6	1000
167.3	42	1.3	5.50	H041	90S6	1000
167.2	42	2.4	8.38	H051	80B4	2500

5.1 H/HA GEARED MOTORS (50Hz)

0.75 kW

n2 [rpm]	M2 [Nm]	fs	i	Gear reducer	Motor	Fr2 [N]
167.0	40	3.6	16.77	H032	71C2	4441
163.4	43	1.3	8.75	H041	80B4	1000
158.1	44	2.4	5.82	H051	80C6	2500
158.1	44	2.4	5.82	H051	90S6	2500
157.9	44	3.0	8.87	H032	80B4	4492
156.0	43	3.5	18.20	H032	80A2	4522
153.8	43	3.5	18.20	H032	71C2	4539
147.7	47	2.3	6.23	H032	80C6	4566
147.7	47	2.3	6.23	H032	90S6	4566
141.2	47	3.2	19.90	H032	80A2	4641
141.2	49	1.7	6.52	HA32	80C6	1344
141.2	49	3.0	6.52	HA42	80C6	2830
141.2	49	3.0	6.52	HA42	90S6	2830
140.7	47	3.2	19.90	H032	71C2	4646
138.7	48	1.4	20.26	HA32	80A2	1352
138.7	48	2.4	20.26	HA42	80A2	2847
138.2	48	1.4	20.26	HA32	71C2	1354
138.2	48	2.3	20.26	HA42	71C2	2850
138.0	50	2.8	10.14	H032	80B4	4651
133.8	50	3.8	21.00	H042	80A2	6081
133.3	50	3.8	21.00	H042	71C2	6087
131.3	53	1.3	10.67	HA61	80B4	4106
128.0	54	3.1	7.19	H042	80C6	6138
128.0	54	3.1	7.19	H042	90S6	6138
128.0	54	1.7	10.94	HA32	80B4	1389
128.0	54	2.8	10.94	HA42	80B4	2924
125.5	56	1.9	7.33	H051	80C6	2500
125.5	56	1.9	7.33	H051	90S6	2500
125.5	56	3.2	7.33	H061	80C6	3700
125.5	56	3.2	7.33	H061	90S6	3700
123.9	54	2.8	22.68	H032	80A2	4799
123.5	54	2.8	22.68	H032	71C2	4804
121.4	55	3.6	23.15	H042	80A2	6251
121.0	55	3.6	23.15	H042	71C2	6257
119.2	56	2.7	23.83	H032	80A2	4847
119.0	58	2.5	11.76	H032	80B4	4827
118.7	59	1.6	7.75	HA61	80C6	4245
118.7	59	1.6	7.75	HA61	90S6	4245
118.5	59	2.2	7.76	H032	80C6	4826
118.5	59	2.2	7.76	H032	90S6	4826
117.5	56	2.7	23.83	H032	71C2	4864
114.5	58	1.1	24.55	HA32	80A2	1442
114.5	58	2.0	24.55	HA42	80A2	3035
114.1	58	1.1	24.55	HA32	71C2	1443
114.1	58	2.0	24.55	HA42	71C2	3038

5.1 H/HA GEARED MOTORS (50Hz)

0.75 kW

n2 [rpm]	M2 [Nm]	fs	i	Gear reducer	Motor	Fr2 [N]
113.4	61	2.2	8.11	HA42	80C6	3044
113.4	61	2.2	8.11	HA42	90S6	3044
110.5	60	3.5	25.43	HA52	80A2	3839
109.9	64	1.6	8.38	H051	80C6	2500
109.9	64	1.6	8.38	H051	90S6	2500
109.9	64	2.8	8.38	H061	80C6	3700
109.9	64	2.8	8.38	H061	90S6	3700
109.1	61	3.2	26.04	H042	80A2	6441
107.6	62	2.4	26.39	H032	80A2	4970
107.5	62	3.2	26.04	H042	71C2	6466
106.1	63	2.4	26.39	H032	71C2	4987
105.7	65	2.2	13.25	HA42	80B4	3117
103.8	67	2.0	8.87	H032	80C6	4983
103.8	67	2.0	8.87	H032	90S6	4983
103.2	67	3.3	8.91	H042	80C6	6515
103.2	67	3.3	8.91	H042	90S6	6515
103.2	67	3.8	13.57	H042	80B4	6521
102.2	65	3.2	27.50	H042	80A2	6558
102.0	67	2.5	13.72	H032	80B4	5010
101.8	65	3.2	27.50	H042	71C2	6564
96.6	71	3.9	14.50	HA52	80B4	4015
95.5	72	2.4	14.66	H032	80B4	5088
94.6	70	2.1	29.70	H032	80A2	5126
94.3	70	2.1	29.70	H032	71C2	5130
94.0	71	3.2	29.89	HA52	80A2	4051
92.3	72	2.9	30.45	H042	80A2	6600
92.0	72	1.5	30.55	HA42	80A2	3264
91.9	72	2.9	30.45	H042	71C2	6600
91.7	72	1.5	30.55	HA42	71C2	3268
90.7	77	1.9	10.14	H032	80C6	5141
90.7	77	1.9	10.14	H032	90S6	5141
89.2	78	3.2	10.31	H042	80C6	6600
89.2	78	3.2	10.31	H042	90S6	6600
87.7	78	3.2	15.96	H042	80B4	6600
85.4	78	1.9	32.89	H032	80A2	5248
85.1	78	1.9	32.89	H032	71C2	5252
84.9	81	1.7	16.49	HA42	80B4	3353
84.1	83	1.9	10.94	HA42	80C6	3363
84.1	83	1.9	10.94	HA42	90S6	3363
83.5	82	2.3	16.77	H032	80B4	5245
82.8	83	3.6	16.91	HA52	80B4	4227
82.4	81	2.6	34.10	H042	80A2	6600
82.1	81	2.6	34.10	H042	71C2	6600
79.0	84	1.3	35.44	HA42	71C2	3434
78.9	88	3.3	11.67	HA52	80C6	4295

5.1 H/HA GEARED MOTORS (50Hz)

0.75 kW

n2 [rpm]	M2 [Nm]	fs	i	Gear reducer	Motor	Fr2 [N]
78.9	88	3.3	11.67	HA52	90S6	4295
78.2	89	1.7	11.76	H032	80C6	5311
78.2	89	1.7	11.76	H032	90S6	5311
78.0	89	2.9	11.80	H042	80C6	6600
78.0	89	2.9	11.80	H042	90S6	6600
77.7	85	2.6	36.17	HA52	80A2	4317
76.9	89	2.2	18.20	H032	80B4	5339
74.4	89	2.4	37.76	H042	80A2	6600
74.1	90	1.7	37.92	H032	80A2	5415
74.1	89	2.3	37.76	H042	71C2	6600
73.8	90	1.7	37.92	H032	71C2	5419
73.7	93	2.7	19.00	H042	80B4	6600
72.1	92	4.0	38.98	H052	80A2	8000
71.8	92	4.0	38.98	H052	71C2	8000
70.4	98	2.0	19.90	H032	80B4	5440
69.4	100	1.5	13.25	HA42	80C6	3585
69.4	100	1.5	13.25	HA42	90S6	3585
69.1	100	1.5	20.26	HA42	80B4	3591
68.4	100	2.9	20.46	HA52	80B4	4504
67.9	98	1.5	41.40	H032	80A2	5500
67.8	102	2.6	13.57	H042	80C6	6600
67.8	102	2.6	13.57	H042	90S6	6600
67.6	98	1.5	41.40	H032	71C2	5500
67.1	104	1.7	13.72	H032	80C6	5482
67.1	104	1.7	13.72	H032	90S6	5482
66.7	103	2.4	21.00	H042	80B4	6600
64.2	103	2.0	43.75	H042	80A2	6600
64.0	104	2.0	43.75	H042	71C2	6600
63.4	109	2.7	14.50	HA52	80C6	4618
63.4	109	2.7	14.50	HA52	90S6	4618
62.8	111	1.6	14.66	H032	80C6	5500
62.8	111	1.6	14.66	H032	90S6	5500
62.5	106	2.0	44.95	HA52	80A2	4641
62.5	106	3.1	44.95	HA62	80A2	6850
61.9	107	3.4	45.36	H052	80A2	8000
61.7	111	1.8	22.68	H032	80B4	5500
61.7	108	3.4	45.36	H052	71C2	8000
60.5	114	2.3	23.15	H042	80B4	6600
59.5	112	1.3	47.25	H032	80A2	5500
59.3	112	1.3	47.25	H032	71C2	5500
59.1	112	1.9	47.53	H042	80A2	6600
58.9	113	1.9	47.53	H042	71C2	6600
58.7	117	1.7	23.83	H032	80B4	5500
57.6	120	2.2	15.96	H042	80C6	6600
57.6	120	2.2	15.96	H042	90S6	6600

5.1 H/HA GEARED MOTORS (50Hz)

0.75 kW

n2 [rpm]	M2 [Nm]	fs	i	Gear reducer	Motor	Fr2 [N]
57.2	116	3.2	49.13	H052	80A2	8000
57.0	116	3.2	49.13	H052	71C2	8000
56.7	121	3.9	24.71	H052	80B4	8000
56.5	118	1.9	49.78	HA52	80A2	4802
56.5	118	2.4	49.78	HA62	80A2	7087
56.4	115	2.0	49.80	HA53	80A2	4802
56.4	115	3.1	49.80	HA63	80A2	7088
56.2	116	1.9	49.80	HA53	71C2	4808
56.2	116	3.1	49.80	HA63	71C2	7097
55.4	125	3.8	16.59	H052	80C6	8000
55.4	125	3.8	16.59	H052	90S6	8000
55.1	125	2.2	25.43	HA52	80B4	4842
55.1	125	3.4	25.43	HA62	80B4	7147
54.9	127	1.6	16.77	H032	80C6	5500
54.9	127	1.6	16.77	H032	90S6	5500
54.4	128	2.5	16.91	HA52	80C6	4861
54.4	128	2.5	16.91	HA52	90S6	4861
53.8	128	2.0	26.04	H042	80B4	6600
53.5	129	3.8	26.18	H052	80B4	8000
53.0	130	1.5	26.39	H032	80B4	5500
52.4	124	1.2	53.59	H033	80A2	5500
52.2	124	1.2	53.59	H033	71C2	5500
51.8	128	1.6	54.25	H042	80A2	6600
51.6	129	1.6	54.25	H042	71C2	6600
51.1	136	3.6	18.00	H052	80C6	8000
51.1	136	3.6	18.00	H052	90S6	8000
50.9	135	2.1	27.50	H042	80B4	6600
50.5	137	1.5	18.20	H032	80C6	5500
50.5	137	1.5	18.20	H032	90S6	5500
50.1	133	2.8	56.11	H052	80A2	8000
49.9	133	2.8	56.11	H052	71C2	8000
49.2	140	3.5	28.44	H052	80B4	8000
48.4	143	1.8	19.00	H042	80C6	6600
48.4	143	1.8	19.00	H042	90S6	6600
47.8	136	2.8	58.81	H053	80A2	8000
47.6	136	2.7	58.81	H053	71C2	8000
47.1	146	1.4	29.70	H032	80B4	5500
46.8	147	2.0	29.89	HA52	80B4	5110
46.8	147	3.1	29.89	HA62	80B4	7543
46.6	139	1.6	60.25	HA53	80A2	5117
46.6	139	2.6	60.25	HA63	80A2	7553
46.5	140	1.6	60.25	HA53	71C2	5123
46.5	140	2.6	60.25	HA63	71C2	7562
46.1	151	3.2	19.97	H052	80C6	8000
46.1	151	3.2	19.97	H052	90S6	8000

5.1 H/HA GEARED MOTORS (50Hz)

0.75 kW

n2 [rpm]	M2 [Nm]	fs	i	Gear reducer	Motor	Fr2 [N]
46.0	150	1.9	30.45	H042	80B4	6600
45.4	143	1.6	61.83	H043	80A2	6600
45.4	146	1.5	61.87	HA52	80A2	5163
45.4	146	2.3	61.87	HA62	80A2	7620
45.3	143	1.6	61.83	H043	71C2	6600
45.0	154	2.0	20.46	HA52	80C6	5180
45.0	154	2.0	20.46	HA52	90S6	5180
45.0	154	3.1	20.46	HA62	80C6	7646
45.0	154	3.1	20.46	HA62	90S6	7646
44.4	155	3.2	31.52	H052	80B4	8000
43.8	159	1.7	21.00	H042	80C6	6600
43.8	159	1.7	21.00	H042	90S6	6600
42.6	162	1.2	32.89	H032	80B4	5500
42.5	164	3.0	21.67	H052	80C6	8000
42.5	164	3.0	21.67	H052	90S6	8000
42.4	162	3.0	33.00	H052	80B4	8000
41.1	167	1.7	34.10	H042	80B4	6600
39.7	175	1.6	23.15	H042	80C6	6600
39.7	175	1.6	23.15	H042	90S6	6600
38.7	178	1.7	36.17	HA52	80B4	5445
38.7	178	2.6	36.17	HA62	80B4	8000
38.6	168	2.2	72.75	H053	80A2	8000
38.5	169	2.2	72.75	H053	71C2	8000
37.5	173	1.3	74.88	HA53	80A2	5502
37.5	173	2.1	74.88	HA63	80A2	8000
37.4	174	1.3	74.88	HA53	71C2	5508
37.4	174	2.1	74.88	HA63	71C2	8000
37.2	186	2.6	24.71	H052	80C6	8000
37.2	186	2.6	24.71	H052	90S6	8000
37.1	185	1.5	37.76	H042	80B4	6600
36.6	177	1.3	76.67	H043	80A2	6600
36.5	178	1.3	76.67	H043	71C2	6600
36.2	192	1.5	25.43	HA52	80C6	5570
36.2	192	1.5	25.43	HA52	90S6	5570
36.2	192	2.4	25.43	HA62	80C6	8000
36.2	192	2.4	25.43	HA62	90S6	8000
35.9	191	2.6	38.98	H052	80B4	8000
35.1	198	2.6	26.18	H052	80C6	8000
35.1	198	2.6	26.18	H052	90S6	8000
32.7	198	3.2	85.82	H063	80A2	12000
32.6	199	3.2	85.82	H063	71C2	12000
32.4	215	2.4	28.44	H052	80C6	8000
32.4	215	2.4	28.44	H052	90S6	8000
32.3	201	1.1	87.05	H043	80A2	6600
32.2	202	1.1	87.05	H043	71C2	6600

5.1 H/HA GEARED MOTORS (50Hz)

0.75 kW

n2 [rpm]	M2 [Nm]	fs	i	Gear reducer	Motor	Fr2 [N]
32.0	215	1.3	43.75	H042	80B4	6600
31.9	204	1.1	88.02	HA53	80A2	5807
31.9	204	1.8	88.02	HA63	80A2	8000
31.8	204	1.1	88.02	HA53	71C2	5813
31.8	204	1.8	88.02	HA63	71C2	8000
31.4	221	3.8	29.33	H062	80C6	12000
31.4	221	3.8	29.33	H062	90S6	12000
31.1	221	1.3	44.95	HA52	80B4	5855
31.1	221	2.0	44.95	HA62	80B4	8000
31.0	209	1.8	90.51	H053	80A2	8000
30.9	223	2.2	45.36	H052	80B4	8000
30.9	210	1.8	90.51	H053	71C2	8000
30.8	226	2.1	29.89	HA62	80C6	8000
30.8	226	2.1	29.89	HA62	90S6	8000
30.4	226	3.8	46.06	H062	80B4	12000
30.2	230	1.3	30.45	H042	80C6	6600
30.2	230	1.3	30.45	H042	90S6	6600
29.7	219	2.9	94.76	H063	80A2	12000
29.5	233	1.2	47.53	H042	80B4	6600
29.5	220	2.9	94.76	H063	71C2	12000
29.2	238	2.2	31.52	H052	80C6	8000
29.2	238	2.2	31.52	H052	90S6	8000
28.8	242	3.7	32.00	H062	80C6	12000
28.8	242	3.7	32.00	H062	90S6	12000
28.5	241	2.0	49.13	H052	80B4	8000
28.1	244	1.2	49.78	HA52	80B4	6000
28.1	239	1.3	49.80	HA53	80B4	6000
28.1	244	1.5	49.78	HA62	80B4	8000
28.1	239	2.0	49.80	HA63	80B4	8000
27.9	249	2.1	33.00	H052	80C6	8000
27.9	249	2.1	33.00	H052	90S6	8000
25.8	252	1.5	108.95	H053	80A2	8000
25.7	253	1.5	108.95	H053	71C2	8000
25.4	273	1.8	36.17	HA62	80C6	8000
25.4	273	1.8	36.17	HA62	90S6	8000
25.2	258	1.4	111.61	HA63	80A2	8000
25.1	259	1.4	111.61	HA63	71C2	8000
24.9	276	1.8	56.11	H052	80B4	8000
24.9	279	3.0	36.99	H062	80C6	12000
24.9	279	3.0	36.99	H062	90S6	12000
23.8	283	1.8	58.81	H053	80B4	8000
23.8	273	2.3	118.00	H063	80A2	12000
23.7	274	2.3	118.00	H063	71C2	12000
23.6	294	1.7	38.98	H052	80C6	8000
23.6	294	1.7	38.98	H052	90S6	8000

5.1 H/HA GEARED MOTORS (50Hz)

0.75 kW

n2 [rpm]	M2 [Nm]	fs	i	Gear reducer	Motor	Fr2 [N]
23.2	290	1.7	60.25	HA63	80B4	8000
22.8	304	2.9	40.33	H062	80C6	12000
22.8	304	2.9	40.33	H062	90S6	12000
22.6	304	1.4	61.87	HA62	80B4	8000
20.9	312	1.2	134.76	H053	80A2	8000
20.8	313	1.2	134.76	H053	71C2	8000
20.8	313	2.0	135.40	H063	80A2	12000
20.7	314	2.0	135.40	H063	71C2	12000
20.5	339	1.4	44.95	HA62	80C6	8000
20.5	339	1.4	44.95	HA62	90S6	8000
20.3	342	1.5	45.36	H052	80C6	8000
20.3	342	1.5	45.36	H052	90S6	8000
20.3	321	1.1	138.71	HA63	80A2	8000
20.2	322	1.1	138.71	HA63	71C2	8000
20.0	348	2.6	46.06	H062	80C6	12000
20.0	348	2.6	46.06	H062	90S6	12000
19.2	350	1.4	72.75	H053	80B4	8000
18.8	346	1.8	149.51	H063	80A2	12000
18.7	371	1.4	49.13	H052	80C6	8000
18.7	371	1.4	49.13	H052	90S6	8000
18.7	347	1.8	149.51	H063	71C2	12000
18.7	360	1.3	74.88	HA63	80B4	8000
18.6	366	2.4	49.45	H063	90S6	12000
18.5	368	1.4	49.80	HA63	80C6	8000
18.5	368	1.4	49.80	HA63	90S6	8000
18.2	358	3.8	154.76	H083	80A2	18000
17.3	375	3.6	162.35	H083	80A2	18000
16.8	415	1.2	56.11	H052	90S6	8000
16.8	404	2.2	54.61	H063	90S6	12000
16.5	395	1.6	170.67	H063	80A2	12000
16.4	396	1.6	170.67	H063	71C2	12000
16.3	413	2.1	85.82	H063	80B4	12000
16.0	425	1.2	58.81	H053	90S6	8000
15.9	423	1.2	90.51	H053	80B4	8000
15.7	414	3.3	179.13	H083	80A2	18000
15.1	430	1.5	186.18	H063	80A2	12000
15.0	432	1.5	186.18	H063	71C2	12000
14.8	456	1.9	94.76	H063	80B4	12000
14.4	451	3.0	195.07	H083	80A2	18000
14.3	472	3.8	98.09	H083	80B4	18000
13.5	503	1.8	68.00	H063	90S6	12000
13.1	498	1.3	215.21	H063	80A2	12000
13.0	499	1.3	215.21	H063	71C2	12000
12.9	528	3.6	71.48	H083	80C6	18000
12.9	528	3.6	71.48	H083	90S6	18000

5.1 H/HA GEARED MOTORS (50Hz)

0.75 kW

n2 [rpm]	M2 [Nm]	fs	i	Gear reducer	Motor	Fr2 [N]
12.6	515	2.6	222.78	H083	80A2	18000
12.4	542	3.3	112.78	H083	80B4	18000
12.0	543	1.2	234.67	H063	80A2	12000
11.9	567	1.5	118.00	H063	80B4	12000
11.9	545	1.2	234.67	H063	71C2	12000
11.7	583	3.2	78.87	H083	80C6	18000
11.7	583	3.2	78.87	H083	90S6	18000
11.3	598	3.0	124.44	H083	80B4	18000
10.8	632	3.0	85.56	H083	80C6	18000
10.8	632	3.0	85.56	H083	90S6	18000
10.7	634	1.4	85.82	H063	80C6	12000
10.7	634	1.4	85.82	H063	90S6	12000
10.3	651	1.3	135.40	H063	80B4	12000
9.8	684	2.6	142.15	H083	80B4	18000
9.7	700	1.3	94.76	H063	80C6	12000
9.7	700	1.3	94.76	H063	90S6	12000
9.4	719	1.2	149.51	H063	80B4	12000
9.4	725	2.6	98.09	H083	80C6	18000
9.4	725	2.6	98.09	H083	90S6	18000
9.0	744	2.4	154.76	H083	80B4	18000
8.6	781	2.3	162.35	H083	80B4	18000
8.2	834	2.3	112.78	H083	80C6	18000
8.2	834	2.3	112.78	H083	90S6	18000
7.8	861	2.1	179.13	H083	80B4	18000
7.4	920	2.1	124.44	H083	80C6	18000
7.4	920	2.1	124.44	H083	90S6	18000
7.2	938	1.9	195.07	H083	80B4	18000
6.5	1051	1.8	142.15	H083	80C6	18000
6.5	1051	1.8	142.15	H083	90S6	18000
6.4	1060	3.5	143.42	H103	90S6	22000
6.3	1071	1.7	222.78	H083	80B4	18000
5.9	1144	1.7	154.76	H083	80C6	18000
5.9	1144	1.7	154.76	H083	90S6	18000
5.7	1200	1.6	162.35	H083	80C6	18000
5.7	1200	1.6	162.35	H083	90S6	18000
5.7	1189	3.1	160.82	H103	90S6	22000
5.1	1324	1.4	179.13	H083	80C6	18000
5.1	1324	1.4	179.13	H083	90S6	18000
5.1	1338	2.7	181.07	H103	90S6	22000
4.7	1442	1.3	195.07	H083	80C6	18000
4.7	1442	1.3	195.07	H083	90S6	18000
4.7	1435	2.6	194.21	H103	90S6	22000
4.3	1593	2.3	215.45	H103	90S6	22000
3.8	1793	2.1	242.59	H103	90S6	22000

5.1 H/HA GEARED MOTORS (50Hz)

0.92 kW

n2 [rpm]	M2 [Nm]	fs	i	Gear reducer	Motor	Fr2 [N]
973.9	9	2.9	1.44	H041	80C4	672
966.7	9	2.8	1.45	HA41	80C4	512
700.0	12	2.1	2.00	H041	80C4	738
550.0	15	1.9	2.55	H041	80C4	788
549.0	16	1.2	2.55	HA31	80C4	611
515.8	17	1.8	2.71	H041	80C4	802
475.5	18	1.4	2.94	HA41	80C4	648
475.5	18	2.2	2.94	HA51	80C4	1786
450.8	19	2.1	3.11	H041	80C4	831
390.2	22	2.1	3.59	H041	80C4	862
350.0	24	3.7	4.00	H051	80C4	2325
333.3	26	1.8	4.20	H041	80C4	896
298.1	28	3.4	4.70	H032	80C4	3715
294.7	29	1.7	4.75	HA51	80C4	2095
293.5	29	3.3	4.77	H051	80C4	2450
280.0	30	1.5	5.00	H041	80C4	934
266.7	32	3.1	5.25	H051	80C4	2500
260.3	32	2.5	5.38	HA32	80C4	1096
256.7	33	1.5	5.45	HA51	80C4	2194
254.5	33	1.5	5.50	H041	80C4	954
240.6	35	2.8	5.82	H051	80C4	2500
229.9	37	1.3	6.09	H041	80C4	975
224.7	38	2.8	6.23	H032	80C4	4010
214.8	39	2.0	6.52	HA32	80C4	1169
214.8	39	3.6	6.52	HA42	80C4	2461
194.8	43	3.7	7.19	H042	80C4	5376
190.9	45	2.2	7.33	H051	80C4	2500
190.9	45	3.8	7.33	H061	80C4	3700
180.6	47	1.9	7.75	HA61	80C4	3691
180.4	47	2.7	7.76	H032	80C4	4246
172.6	49	1.5	8.11	HA32	80C4	1257
172.6	49	2.7	8.11	HA42	80C4	2647
167.2	51	2.0	8.38	H051	80C4	2500
167.2	51	3.3	8.38	H061	80C4	3700
157.9	53	2.4	8.87	H032	80C4	4389
157.1	54	3.9	8.91	H042	80C4	5712
138.0	61	2.3	10.14	H032	80C4	4533
135.7	62	3.9	10.31	H042	80C4	5946
128.0	66	2.3	10.94	HA42	80C4	2924
120.0	70	4.0	11.67	HA52	80C4	3735
119.0	71	2.0	11.76	H032	80C4	4691
118.6	71	3.5	11.80	H042	80C4	6165
105.7	80	1.8	13.25	HA42	80C4	3117
103.2	82	3.1	13.57	H042	80C4	6396
102.0	83	2.1	13.72	H032	80C4	4851

5.1 H/HA GEARED MOTORS (50Hz)

0.92 kW

n2 [rpm]	M2 [Nm]	fs	i	Gear reducer	Motor	Fr2 [N]
96.6	87	3.2	14.50	HA52	80C4	4015
95.5	88	1.9	14.66	H032	80C4	4918
87.7	96	2.6	15.96	H042	80C4	6600
84.9	99	1.4	16.49	HA42	80C4	3353
83.5	101	1.9	16.77	H032	80C4	5051
82.8	102	2.9	16.91	HA52	80C4	4227
76.9	110	1.8	18.20	H032	80C4	5129
73.7	114	2.2	19.00	H042	80C4	6600
70.4	120	1.7	19.90	H032	80C4	5209
70.1	120	3.8	19.97	H052	80C4	8000
68.4	123	2.4	20.46	HA52	80C4	4504
68.4	123	3.7	20.46	HA62	80C4	6647
66.7	127	2.0	21.00	H042	80C4	6600
64.6	131	3.6	21.67	H052	80C4	8000
61.7	137	1.5	22.68	H032	80C4	5320
60.5	139	1.9	23.15	H042	80C4	6600
58.7	144	1.4	23.83	H032	80C4	5359
56.7	149	3.2	24.71	H052	80C4	8000
55.1	153	1.8	25.43	HA52	80C4	4842
55.1	153	2.8	25.43	HA62	80C4	7147
53.8	157	1.7	26.04	H042	80C4	6600
53.5	158	3.1	26.18	H052	80C4	8000
50.9	166	1.7	27.50	H042	80C4	6600
49.2	171	2.9	28.44	H052	80C4	8000
46.8	180	1.7	29.89	HA52	80C4	5110
46.8	180	2.5	29.89	HA62	80C4	7543
46.0	183	1.5	30.45	H042	80C4	6600
44.4	190	2.6	31.52	H052	80C4	8000
42.4	199	2.5	33.00	H052	80C4	8000
41.1	205	1.4	34.10	H042	80C4	6600
38.7	218	1.4	36.17	HA52	80C4	5445
38.7	218	2.2	36.17	HA62	80C4	8000
37.8	223	3.6	36.99	H062	80C4	12000
37.1	228	1.2	37.76	H042	80C4	6600
35.9	235	2.1	38.98	H052	80C4	8000
34.7	243	3.5	40.33	H062	80C4	12000
31.1	271	1.6	44.95	HA62	80C4	8000
30.9	273	1.8	45.36	H052	80C4	8000
30.4	278	3.1	46.06	H062	80C4	12000
28.5	296	1.7	49.13	H052	80C4	8000
28.1	300	1.2	49.78	HA62	80C4	8000
28.1	294	1.6	49.80	HA63	80C4	8000
24.9	338	1.4	56.11	H052	80C4	8000
23.8	347	1.4	58.81	H053	80C4	8000
23.2	355	1.4	60.25	HA63	80C4	8000

5.1 H/HA GEARED MOTORS (50Hz)

0.92 kW

n2 [rpm]	M2 [Nm]	fs	i	Gear reducer	Motor	Fr2 [N]
22.6	373	1.2	61.87	HA62	80C4	8000
17.8	465	3.9	78.87	H083	80C4	18000
16.4	505	3.6	85.56	H083	80C4	18000
16.3	506	1.7	85.82	H063	80C4	12000
14.8	559	1.5	94.76	H063	80C4	12000
14.3	579	3.1	98.09	H083	80C4	18000
12.4	665	2.7	112.78	H083	80C4	18000
11.9	696	1.2	118.00	H063	80C4	12000
11.3	734	2.5	124.44	H083	80C4	18000
9.8	839	2.1	142.15	H083	80C4	18000
9.0	913	2.0	154.76	H083	80C4	18000
8.6	958	1.9	162.35	H083	80C4	18000
7.8	1057	1.7	179.13	H083	80C4	18000
7.2	1151	1.6	195.07	H083	80C4	18000
6.3	1314	1.4	222.78	H083	80C4	18000

1.10 kW

n2 [rpm]	M2 [Nm]	fs	i	Gear reducer	Motor	Fr2 [N]
1975.7	5	3.8	1.44	H041	80B2	541
1961.0	5	3.7	1.45	HA41	80B2	404
1420.0	7	2.7	2.00	H041	80B2	597
1115.7	9	2.6	2.55	H041	80B2	640
1113.7	9	1.6	2.55	HA31	80B2	483
1046.3	9	2.4	2.71	H041	80B2	652
994.8	10	2.4	1.44	H041	90S4	660
980.9	10	2.4	1.44	H041	80D4	663
973.6	10	2.4	1.45	HA41	80D4	510
973.6	10	3.8	1.45	HA51	80D4	1407
966.7	11	3.8	1.45	HA51	90S4	1410
964.5	10	1.5	2.94	HA31	80B2	506
964.5	10	1.8	2.94	HA41	80B2	512
964.5	10	2.9	2.94	HA51	80B2	1411
914.6	11	2.8	3.11	H041	80B2	677
894.1	11	1.4	3.18	HA31	80B2	519
846.0	12	1.3	3.36	HA31	80B2	529
791.5	12	2.7	3.59	H041	80B2	705
746.4	14	3.0	1.27	H051	100LR6	1833
738.6	14	3.0	1.27	H051	90L6	1839
734.5	13	1.2	3.87	HA31	80B2	554
705.0	14	1.7	2.00	H041	80D4	725
700.0	15	1.7	2.00	H041	90S4	727
676.2	15	2.3	4.20	H041	80B2	736
672.9	15	4.0	2.13	H051	90S4	1893

5.1 H/HA GEARED MOTORS (50Hz)

1.10 kW

n2 [rpm]	M2 [Nm]	fs	i	Gear reducer	Motor	Fr2 [N]
663.5	15	3.9	2.13	H051	80D4	1901
653.9	16	1.7	1.44	H041	90L6	739
649.0	16	2.6	1.45	HA51	90L6	1610
595.8	17	1.4	4.75	HA41	80B2	601
595.8	17	2.3	4.75	HA51	80B2	1657
568.0	17	1.9	5.00	H041	80B2	771
553.9	18	1.6	2.55	H041	80D4	773
550.0	19	1.6	2.55	H041	90S4	774
548.3	19	3.8	2.57	H051	80D4	2015
544.4	19	3.7	2.57	H051	90S4	2019
527.9	18	3.3	5.38	HA32	80B2	866
520.7	19	1.2	5.45	HA41	80B2	629
520.7	19	2.0	5.45	HA51	80B2	1733
519.5	20	1.5	2.71	H041	80D4	786
516.4	19	2.0	5.50	H041	80B2	790
515.8	20	1.5	2.71	H041	90S4	787
488.1	20	3.7	5.82	H051	80B2	2090
485.7	21	1.9	2.94	HA51	90S4	1773
478.9	21	1.9	2.94	HA51	80D4	1782
466.3	21	1.8	6.09	H041	80B2	811
454.1	22	1.8	3.11	H041	80D4	812
451.6	23	3.5	3.17	H051	90S4	2136
450.8	23	1.8	3.11	H041	90S4	814
447.1	23	2.7	2.13	H051	100LR6	2142
445.3	23	3.5	3.17	H051	80D4	2145
437.6	24	2.7	2.13	H051	90L6	2155
435.8	22	2.7	6.52	HA32	80B2	923
398.5	26	1.8	3.59	H041	90S4	838
393.0	26	1.7	3.59	H041	80D4	841
387.3	25	3.0	7.33	H051	80B2	2240
382.4	27	3.4	3.69	H051	80D4	2245
380.0	27	3.5	2.50	HA61	100LR6	2881
379.7	27	3.4	3.69	H051	90S4	2249
372.0	28	3.4	2.50	HA61	90L6	2901
370.4	27	1.4	7.67	H041	80B2	857
369.4	28	2.6	2.57	H051	100LR6	2266
366.5	27	2.5	7.75	HA61	80B2	2916
365.6	28	2.6	2.57	H051	90L6	2273
357.5	29	3.2	4.00	H051	90S4	2290
352.5	29	3.1	4.00	H051	80D4	2299
350.2	28	2.0	8.11	HA32	80B2	993
350.2	28	3.5	8.11	HA42	80B2	2091
339.1	29	2.6	8.38	H051	80B2	2330
335.7	30	1.5	4.20	H041	80D4	871
333.3	31	1.5	4.20	H041	90S4	873

5.1 H/HA GEARED MOTORS (50Hz)

1.10 kW

n2 [rpm]	M2 [Nm]	fs	i	Gear reducer	Motor	Fr2 [N]
324.6	30	1.4	8.75	H041	80B2	883
321.6	32	3.5	4.38	HA61	80D4	3045
320.3	30	3.2	8.87	H032	80B2	3599
319.3	32	3.4	4.38	HA61	90S4	3053
315.8	33	1.3	2.94	HA51	90L6	2047
302.7	34	1.2	3.11	H041	90L6	890
300.3	34	2.8	4.70	H032	80D4	3650
300.0	34	2.4	3.17	H051	100LR6	2408
300.0	34	4.0	3.17	H061	100LR6	3700
298.1	34	2.8	4.70	H032	90S4	3657
296.8	35	2.4	3.17	H051	90L6	2416
296.8	35	3.9	3.17	H061	90L6	3700
296.8	34	1.5	4.75	HA51	80D4	2090
295.6	34	2.8	4.77	H051	80D4	2420
294.7	35	1.4	4.75	HA51	90S4	2095
293.5	35	2.7	4.77	H051	90S4	2425
286.0	36	1.3	5.00	H041	90S4	902
282.0	36	1.2	5.00	H041	80D4	905
280.0	35	3.0	10.14	H032	80B2	3731
268.6	38	2.6	5.25	H051	80D4	2488
266.7	38	2.6	5.25	H051	90S4	2493
266.3	37	1.4	10.67	HA61	80B2	3243
262.1	38	2.1	5.38	HA32	80D4	1094
262.1	38	3.6	5.38	HA42	80D4	2303
260.3	39	3.6	5.38	HA42	90S4	2308
258.8	38	1.8	10.94	HA32	80B2	1098
258.8	38	3.0	10.94	HA42	80B2	2312
258.5	39	1.3	5.45	HA51	80D4	2188
257.6	40	2.4	3.69	H051	100LR6	2500
257.6	40	3.9	3.69	H061	100LR6	3700
256.7	40	1.3	5.45	HA51	90S4	2194
256.4	40	1.3	5.50	H041	80D4	922
254.5	40	1.2	5.50	H041	90S4	923
252.2	41	2.3	3.69	H051	90L6	2500
252.2	41	3.9	3.69	H061	90L6	3700
242.3	42	2.4	5.82	H051	80D4	2500
241.5	40	2.7	11.76	H032	80B2	3879
240.6	42	2.4	5.82	H051	90S4	2500
237.5	43	2.2	4.00	H051	100LR6	2500
237.5	43	3.6	4.00	H061	100LR6	3700
235.0	44	2.2	4.00	H051	90L6	2500
235.0	44	3.6	4.00	H061	90L6	3700
226.4	45	2.4	6.23	H032	80D4	3927
224.7	45	2.3	6.23	H032	90S4	3934
216.7	48	2.4	4.38	HA61	100LR6	3474

5.1 H/HA GEARED MOTORS (50Hz)

1.10 kW

n2 [rpm]	M2 [Nm]	fs	i	Gear reducer	Motor	Fr2 [N]
216.3	47	1.7	6.52	HA32	80D4	1166
216.3	47	3.0	6.52	HA42	80D4	2455
214.8	47	3.0	6.52	HA42	90S4	2461
213.6	46	1.3	13.25	HA32	80B2	1171
213.6	46	2.3	13.25	HA42	80B2	2465
212.1	49	2.4	4.38	HA61	90L6	3499
207.0	47	2.7	13.72	H032	80B2	4033
202.3	50	2.0	4.70	H032	100LR6	4033
200.2	51	2.0	4.70	H032	90L6	4043
199.2	52	1.9	4.77	H051	100LR6	2500
199.2	52	3.3	4.77	H061	100LR6	3700
196.2	51	3.1	7.19	H042	80D4	5296
195.0	53	1.9	4.77	H051	90L6	2500
195.0	53	3.2	4.77	H061	90L6	3700
194.8	52	3.1	7.19	H042	90S4	5306
193.8	50	2.5	14.66	H032	80B2	4099
192.3	53	1.9	7.33	H051	80D4	2500
192.3	53	3.2	7.33	H061	80D4	3700
190.9	53	1.9	7.33	H051	90S4	2500
190.9	53	3.2	7.33	H061	90S4	3700
181.9	56	1.6	7.75	HA61	80D4	3682
181.6	56	2.3	7.76	H032	80D4	4144
181.0	57	1.8	5.25	H051	100LR6	2500
181.0	57	3.1	5.25	H061	100LR6	3700
180.6	56	1.6	7.75	HA61	90S4	3691
180.4	56	2.2	7.76	H032	90S4	4151
177.9	55	3.4	15.96	H042	80B2	5456
177.1	58	1.8	5.25	H051	90L6	2500
177.1	58	3.1	5.25	H061	90L6	3700
173.9	59	2.9	5.46	H042	100LR6	5468
173.9	58	2.2	8.11	HA42	80D4	2640
172.9	59	2.5	5.38	HA42	90L6	2645
172.6	58	2.2	8.11	HA42	90S4	2647
172.2	57	1.9	16.49	HA42	80B2	2649
170.3	60	2.8	5.46	H042	90L6	5500
168.8	58	2.5	16.77	H032	80B2	4237
168.4	61	1.7	8.38	H051	80D4	2500
168.4	61	2.8	8.38	H061	80D4	3700
167.9	58	3.9	16.91	HA52	80B2	3339
167.2	61	1.6	8.38	H051	90S4	2500
167.2	61	2.8	8.38	H061	90S4	3700
163.3	63	1.7	5.82	H051	100LR6	2500
163.3	63	2.8	5.82	H061	100LR6	3700
161.6	64	1.6	5.82	H051	90L6	2500
161.6	64	2.8	5.82	H061	90L6	3700

5.1 H/HA GEARED MOTORS (50Hz)

1.10 kW

n2 [rpm]	M2 [Nm]	fs	i	Gear reducer	Motor	Fr2 [N]
159.0	63	2.0	8.87	H032	80D4	4273
158.2	64	3.3	8.91	H042	80D4	5614
157.9	64	2.0	8.87	H032	90S4	4280
157.1	64	3.3	8.91	H042	90S4	5625
155.5	63	2.4	18.20	H032	80B2	4319
152.7	67	3.8	6.22	HA52	100LR6	3446
152.5	67	1.7	6.23	H032	100LR6	4307
149.5	65	2.9	19.00	H042	80B2	5719
149.5	68	3.7	6.22	HA52	90L6	3471
149.3	68	1.6	6.23	H032	90L6	4327
144.2	71	2.1	6.52	HA42	90L6	2810
142.7	68	2.2	19.90	H032	80B2	4403
139.7	70	1.6	20.26	HA42	80B2	2840
139.0	73	1.9	10.14	H032	80D4	4402
138.8	70	3.1	20.46	HA52	80B2	3558
138.0	73	1.9	10.14	H032	90S4	4409
136.7	74	3.3	10.31	H042	80D4	5835
135.7	74	3.2	10.31	H042	90S4	5845
135.2	72	2.6	21.00	H042	80B2	5873
132.2	77	2.2	7.19	H042	100LR6	5879
129.5	79	2.2	7.33	H061	100LR6	3700
129.4	79	2.1	7.19	H042	90L6	5912
128.9	78	1.9	10.94	HA42	80D4	2917
128.0	79	1.9	10.94	HA42	90S4	2924
126.8	81	1.3	7.33	H051	90L6	2500
126.8	81	2.2	7.33	H061	90L6	3700
125.2	78	1.9	22.68	H032	80B2	4529
122.8	83	3.0	7.73	HA52	100LR6	3705
122.4	83	1.6	7.76	H032	100LR6	4513
122.3	80	2.4	23.15	H042	80B2	6028
120.9	83	3.4	11.67	HA52	80D4	3726
120.3	85	3.0	7.73	HA52	90L6	3732
120.0	84	3.3	11.67	HA52	90S4	3735
119.9	84	1.7	11.76	H032	80D4	4540
119.8	85	1.5	7.76	H032	90L6	4532
119.5	84	3.0	11.80	H042	80D4	6039
119.2	82	1.8	23.83	H032	80B2	4576
119.0	85	1.7	11.76	H032	90S4	4547
118.6	85	2.9	11.80	H042	90S4	6050
115.7	84	1.4	24.55	HA42	80B2	3024
114.7	89	1.5	8.11	HA42	90L6	3033
113.4	91	2.0	8.38	H061	100LR6	3700
111.7	87	2.4	25.43	HA52	80B2	3825
111.7	87	3.7	25.43	HA62	80B2	5646
111.4	91	3.9	8.53	H052	100LR6	7918

5.1 H/HA GEARED MOTORS (50Hz)

1.10 kW

n2 [rpm]	M2 [Nm]	fs	i	Gear reducer	Motor	Fr2 [N]
111.0	93	1.9	8.38	H061	90L6	3700
110.1	93	3.9	8.44	H081	90L6	4000
109.1	93	3.8	8.53	H052	90L6	7965
108.7	90	2.2	26.04	H042	80B2	6211
107.2	91	1.7	26.39	H032	80B2	4674
106.6	96	2.3	8.91	H042	100LR6	6205
106.4	95	1.5	13.25	HA42	80D4	3110
105.7	95	1.5	13.25	HA42	90S4	3117
104.3	98	2.3	8.91	H042	90L6	6238
103.9	97	2.6	13.57	H042	80D4	6252
103.2	98	2.6	13.57	H042	90S4	6263
102.9	95	2.2	27.50	H042	80B2	6295
102.8	98	1.7	13.72	H032	80D4	4677
102.0	99	1.7	13.72	H032	90S4	4683
99.5	98	3.8	28.44	H052	80B2	8000
99.3	103	3.8	9.56	H052	100LR6	8000
98.5	103	3.0	9.64	HA52	100LR6	3988
97.3	105	3.7	9.56	H052	90L6	8000
97.2	104	2.7	14.50	HA52	80D4	4006
96.6	104	2.7	14.50	HA52	90S4	4015
96.4	106	3.0	9.64	HA52	90L6	4017
96.2	105	1.6	14.66	H032	80D4	4733
95.6	102	1.5	29.70	H032	80B2	4776
95.5	106	1.6	14.66	H032	90S4	4739
94.7	103	2.2	29.89	HA52	80B2	4042
94.7	103	3.3	29.89	HA62	80B2	5965
92.9	105	2.0	30.45	H042	80B2	6454
92.1	111	2.3	10.31	H042	100LR6	6426
90.2	113	2.2	10.31	H042	90L6	6458
90.1	108	3.4	31.52	H052	80B2	8000
88.3	114	2.2	15.96	H042	80D4	6499
87.7	115	2.2	15.96	H042	90S4	6509
86.3	113	1.3	32.89	H032	80B2	4862
86.1	113	3.2	33.00	H052	80B2	8000
85.0	119	3.8	16.59	H052	80D4	8000
84.4	120	3.8	16.59	H052	90S4	8000
84.1	120	1.6	16.77	H032	80D4	4840
83.5	121	1.6	16.77	H032	90S4	4845
83.4	121	2.5	16.91	HA52	80D4	4217
83.3	117	1.8	34.10	H042	80B2	6600
82.8	122	2.5	16.91	HA52	90S4	4227
82.5	123	3.3	11.51	H052	100LR6	8000
81.4	125	2.4	11.67	HA52	100LR6	4250
81.4	125	3.7	11.67	HA62	100LR6	6273
80.8	126	3.2	11.51	H052	90L6	8000

5.1 H/HA GEARED MOTORS (50Hz)

1.10 kW

n2 [rpm]	M2 [Nm]	fs	i	Gear reducer	Motor	Fr2 [N]
80.5	127	2.1	11.80	H042	100LR6	6600
79.7	128	2.3	11.67	HA52	90L6	4280
79.7	128	3.6	11.67	HA62	90L6	6317
78.8	129	2.0	11.80	H042	90L6	6600
78.5	124	1.8	36.17	HA52	80B2	4302
78.5	124	2.8	36.17	HA62	80B2	6349
78.3	129	3.6	18.00	H052	80D4	8000
77.8	130	3.5	18.00	H052	90S4	8000
77.5	130	1.5	18.20	H032	80D4	4900
76.9	131	1.5	18.20	H032	90S4	4905
74.9	130	1.2	37.92	H032	80B2	4973
74.9	130	1.6	37.76	H042	80B2	6600
74.2	136	1.8	19.00	H042	80D4	6600
73.7	137	1.8	19.00	H042	90S4	6600
72.9	134	2.8	38.98	H052	80B2	8000
70.9	142	1.4	19.90	H032	80D4	4961
70.6	143	3.2	19.97	H052	80D4	8000
70.4	143	1.4	19.90	H032	90S4	4965
70.1	144	3.2	19.97	H052	90S4	8000
70.0	146	1.8	13.57	H042	100LR6	6600
68.9	146	2.0	20.46	HA52	80D4	4493
68.9	146	3.1	20.46	HA62	80D4	6632
68.5	149	1.8	13.57	H042	90L6	6600
68.4	147	2.0	20.46	HA52	90S4	4504
68.4	147	3.1	20.46	HA62	90S4	6647
67.1	150	1.7	21.00	H042	80D4	6600
66.7	151	1.7	21.00	H042	90S4	6600
66.7	153	3.0	14.24	H052	100LR6	8000
65.5	155	1.9	14.50	HA52	100LR6	4569
65.5	155	2.8	14.50	HA62	100LR6	6744
65.3	156	2.9	14.24	H052	90L6	8000
65.1	155	3.0	21.67	H052	80D4	8000
64.9	150	1.4	43.75	H042	80B2	6600
64.6	156	3.0	21.67	H052	90S4	8000
64.1	159	1.9	14.50	HA52	90L6	4602
64.1	159	2.8	14.50	HA62	90L6	6792
63.0	155	1.4	44.95	HA52	80B2	4630
63.0	155	2.1	44.95	HA62	80B2	6834
62.4	156	2.4	45.36	H052	80B2	8000
60.9	166	1.6	23.15	H042	80D4	6600
60.5	167	1.6	23.15	H042	90S4	6600
59.7	163	1.3	47.53	H042	80B2	6600
59.5	171	1.5	15.96	H042	100LR6	6600
58.3	175	1.5	15.96	H042	90L6	6600
57.6	169	2.2	49.13	H052	80B2	8000

5.1 H/HA GEARED MOTORS (50Hz)

1.10 kW

n2 [rpm]	M2 [Nm]	fs	i	Gear reducer	Motor	Fr2 [N]
57.3	178	2.7	16.59	H052	100LR6	8000
57.1	177	2.7	24.71	H052	80D4	8000
57.1	171	1.3	49.78	HA52	80B2	4785
57.1	171	1.6	49.78	HA62	80B2	7062
56.8	168	1.3	49.80	HA53	80B2	4791
56.8	168	2.1	49.80	HA63	80B2	7072
56.7	178	2.6	24.71	H052	90S4	8000
56.2	181	1.7	16.91	HA52	100LR6	4810
56.2	181	2.9	16.91	HA62	100LR6	7099
56.0	182	2.6	16.59	H052	90L6	8000
55.4	182	1.5	25.43	HA52	80D4	4831
55.4	182	2.4	25.43	HA62	80D4	7130
55.1	183	1.5	25.43	HA52	90S4	4842
55.1	183	2.3	25.43	HA62	90S4	7147
55.0	185	1.7	16.91	HA52	90L6	4844
55.0	185	2.8	16.91	HA62	90L6	7150
54.1	186	1.4	26.04	H042	80D4	6600
53.9	187	2.6	26.18	H052	80D4	8000
53.8	188	1.4	26.04	H042	90S4	6600
53.5	189	2.6	26.18	H052	90S4	8000
52.8	193	2.5	18.00	H052	100LR6	8000
51.7	197	2.5	18.00	H052	90L6	8000
51.3	197	1.4	27.50	H042	80D4	6600
50.9	198	1.4	27.50	H042	90S4	6600
50.4	193	1.9	56.11	H052	80B2	8000
49.6	203	2.4	28.44	H052	80D4	8000
49.2	205	2.4	28.44	H052	90S4	8000
48.1	198	1.9	58.81	H053	80B2	8000
48.1	210	3.8	29.33	H062	80D4	12000
47.7	211	3.8	29.33	H062	90S4	12000
47.6	214	2.3	19.97	H052	100LR6	8000
47.2	214	1.4	29.89	HA52	80D4	5098
47.2	214	2.1	29.89	HA62	80D4	7525
47.0	203	1.8	60.25	HA63	80B2	7535
46.8	215	1.4	29.89	HA52	90S4	5110
46.8	215	2.1	29.89	HA62	90S4	7543
46.6	219	2.2	19.97	H052	90L6	8000
46.4	219	2.2	20.46	HA62	100LR6	7565
46.3	218	1.3	30.45	H042	80D4	6600
46.0	219	1.3	30.45	H042	90S4	6600
45.7	213	1.6	61.87	HA62	80B2	7602
45.5	224	2.2	20.46	HA62	90L6	7618
44.7	225	2.2	31.52	H052	80D4	8000
44.4	227	2.2	31.52	H052	90S4	8000
44.1	229	3.7	32.00	H062	80D4	12000

5.1 H/HA GEARED MOTORS (50Hz)

1.10 kW

n2 [rpm]	M2 [Nm]	fs	i	Gear reducer	Motor	Fr2 [N]
43.8	232	2.1	21.67	H052	100LR6	8000
43.8	231	3.7	32.00	H062	90S4	12000
42.9	237	2.1	21.67	H052	90L6	8000
42.7	236	2.1	33.00	H052	80D4	8000
42.4	238	2.1	33.00	H052	90S4	8000
40.8	250	3.6	23.27	H062	100LR6	12000
40.0	255	3.5	23.27	H062	90L6	12000
39.5	255	1.2	36.17	HA52	90S4	5407
39.0	259	1.8	36.17	HA62	80D4	8000
38.9	245	1.5	72.75	H053	80B2	8000
38.7	261	1.8	36.17	HA62	90S4	8000
38.5	265	1.9	24.71	H052	100LR6	8000
38.1	265	3.0	36.99	H062	80D4	12000
37.8	266	3.0	36.99	H062	90S4	12000
37.8	252	1.4	74.88	HA63	80B2	8000
37.6	271	1.8	24.71	H052	90L6	8000
37.4	273	1.7	25.43	HA62	100LR6	8000
37.0	276	3.2	25.70	H062	100LR6	12000
36.6	279	1.6	25.43	HA62	90L6	8000
36.3	281	1.8	26.18	H052	100LR6	8000
36.2	279	1.8	38.98	H052	80D4	8000
36.2	281	3.2	25.70	H062	90L6	12000
35.9	281	1.7	38.98	H052	90S4	8000
35.5	287	1.8	26.18	H052	90L6	8000
35.0	288	2.9	40.33	H062	80D4	12000
34.7	291	2.9	40.33	H062	90S4	12000
33.4	305	1.7	28.44	H052	100LR6	8000
33.0	289	2.2	85.82	H063	80B2	12000
32.7	311	1.7	28.44	H052	90L6	8000
32.4	315	2.7	29.33	H062	100LR6	12000
32.2	296	1.2	88.02	HA63	80B2	8000
31.7	321	2.6	29.33	H062	90L6	12000
31.4	324	1.5	29.89	HA62	90L6	8000
31.4	321	1.4	44.95	HA62	80D4	8000
31.3	305	1.2	90.51	H053	80B2	8000
31.1	324	1.5	45.36	H052	80D4	8000
31.1	324	1.4	44.95	HA62	90S4	8000
30.9	327	1.5	45.36	H052	90S4	8000
30.6	329	2.6	46.06	H062	80D4	12000
30.4	332	2.6	46.06	H062	90S4	12000
30.1	338	1.5	31.52	H052	100LR6	8000
29.9	319	2.0	94.76	H063	80B2	12000
29.7	343	2.6	32.00	H062	100LR6	12000
29.5	345	1.5	31.52	H052	90L6	8000
29.1	350	2.5	32.00	H062	90L6	12000

5.1 H/HA GEARED MOTORS (50Hz)

1.10 kW

n2 [rpm]	M2 [Nm]	fs	i	Gear reducer	Motor	Fr2 [N]
28.7	351	1.4	49.13	H052	80D4	8000
28.5	354	1.4	49.13	H052	90S4	8000
28.3	349	2.4	49.45	H063	90S4	12000
28.3	349	1.4	49.80	HA63	80D4	8000
28.2	361	1.4	33.00	H052	90L6	8000
28.1	351	1.4	49.80	HA63	90S4	8000
25.7	397	2.1	36.99	H062	100LR6	12000
25.7	396	1.2	36.17	HA62	90L6	8000
25.6	385	2.2	54.61	H063	90S4	12000
25.1	401	1.2	56.11	H052	80D4	8000
25.1	405	2.1	36.99	H062	90L6	12000
25.1	380	3.6	112.78	H083	80B2	18000
24.9	404	1.2	56.11	H052	90S4	8000
24.4	418	1.2	38.98	H052	100LR6	8000
24.0	412	1.2	58.81	H053	80D4	8000
24.0	397	1.6	118.00	H063	80B2	12000
24.0	424	4.0	38.70	H082	90L6	18000
23.8	415	1.2	58.81	H053	90S4	8000
23.6	432	2.1	40.33	H062	100LR6	12000
23.1	442	2.0	40.33	H062	90L6	12000
22.7	419	3.2	124.44	H083	80B2	18000
22.2	458	3.7	42.75	H082	100LR6	18000
21.8	468	3.6	42.75	H082	90L6	18000
20.9	456	1.4	135.40	H063	80B2	12000
20.6	494	1.8	46.06	H062	100LR6	12000
20.6	480	1.8	68.00	H063	90S4	12000
20.2	504	1.8	46.06	H062	90L6	12000
19.9	479	2.8	142.15	H083	80B2	18000
19.7	516	3.3	48.13	H082	100LR6	18000
19.7	501	3.6	71.48	H083	80D4	18000
19.6	504	3.6	71.48	H083	90S4	18000
19.3	527	3.2	48.13	H082	90L6	18000
19.2	519	1.7	49.45	H063	100LR6	12000
18.9	503	1.3	149.51	H063	80B2	12000
18.8	530	1.7	49.45	H063	90L6	12000
18.3	521	2.6	154.76	H083	80B2	18000
17.9	552	3.3	78.87	H083	80D4	18000
17.8	556	3.2	78.87	H083	90S4	18000
17.4	573	1.6	54.61	H063	100LR6	12000
17.4	547	2.5	162.35	H083	80B2	18000
17.0	586	1.5	54.61	H063	90L6	12000
16.8	593	2.8	56.53	H083	100LR6	18000
16.5	606	2.8	56.53	H083	90L6	18000
16.5	599	3.0	85.56	H083	80D4	18000
16.4	601	1.4	85.82	H063	80D4	12000

5.1 H/HA GEARED MOTORS (50Hz)

1.10 kW

n2 [rpm]	M2 [Nm]	fs	i	Gear reducer	Motor	Fr2 [N]
16.4	603	3.0	85.56	H083	90S4	18000
16.3	605	1.4	85.82	H063	90S4	12000
15.8	603	2.2	179.13	H083	80B2	18000
14.9	664	1.3	94.76	H063	80D4	12000
14.8	668	1.3	94.76	H063	90S4	12000
14.5	657	2.1	195.07	H083	80B2	18000
14.4	687	2.6	98.09	H083	80D4	18000
14.3	692	2.6	98.09	H083	90S4	18000
14.0	714	1.3	68.00	H063	100LR6	12000
13.8	721	1.2	68.00	H063	90L6	12000
13.3	750	2.5	71.48	H083	100LR6	18000
13.0	767	2.5	71.48	H083	90L6	18000
12.7	750	1.8	222.78	H083	80B2	18000
12.5	790	2.3	112.78	H083	80D4	18000
12.4	796	2.3	112.78	H083	90S4	18000
12.0	828	2.3	78.87	H083	100LR6	18000
11.8	846	2.2	78.87	H083	90L6	18000
11.3	872	2.1	124.44	H083	80D4	18000
11.3	878	2.1	124.44	H083	90S4	18000
11.1	898	2.1	85.56	H083	100LR6	18000
10.9	918	2.1	85.56	H083	90L6	18000
10.2	980	3.7	93.36	H103	100LR6	22000
9.9	996	1.8	142.15	H083	80D4	18000
9.8	1003	1.8	142.15	H083	90S4	18000
9.8	1012	3.5	143.42	H103	90S4	22000
9.7	1030	1.8	98.09	H083	100LR6	18000
9.5	1052	1.8	98.09	H083	90L6	18000
9.5	1051	3.5	100.07	H103	100LR6	22000
9.1	1084	1.7	154.76	H083	80D4	18000
9.0	1092	1.6	154.76	H083	90S4	18000
8.7	1137	1.6	162.35	H083	80D4	18000
8.7	1134	3.1	160.82	H103	90S4	22000
8.6	1145	1.6	162.35	H083	90S4	18000
8.4	1184	1.6	112.78	H083	100LR6	18000
8.2	1210	1.6	112.78	H083	90L6	18000
7.9	1255	1.4	179.13	H083	80D4	18000
7.9	1269	2.9	120.84	H103	100LR6	22000
7.8	1263	1.4	179.13	H083	90S4	18000
7.7	1277	2.7	181.07	H103	90S4	22000
7.6	1306	1.4	124.44	H083	100LR6	18000
7.5	1335	1.4	124.44	H083	90L6	18000
7.4	1346	3.9	128.18	H123	100LR6	30000
7.2	1366	1.3	195.07	H083	80D4	18000
7.2	1376	1.3	195.07	H083	90S4	18000
7.2	1370	2.6	194.21	H103	90S4	22000

5.1 H/HA GEARED MOTORS (50Hz)

1.10 kW

n2 [rpm]	M2 [Nm]	fs	i	Gear reducer	Motor	Fr2 [N]
7.1	1407	2.6	134.06	H103	100LR6	22000
6.7	1492	1.3	142.15	H083	100LR6	18000
6.6	1506	2.4	143.42	H103	100LR6	22000
6.6	1520	3.5	144.79	H123	100LR6	30000
6.5	1524	1.2	142.15	H083	90L6	18000
6.5	1538	2.4	143.42	H103	90L6	22000
6.5	1520	2.3	215.45	H103	90S4	22000
6.1	1630	3.2	155.22	H123	100LR6	30000
5.9	1688	2.2	160.82	H103	100LR6	22000
5.8	1725	2.1	160.82	H103	90L6	22000
5.8	1711	2.1	242.59	H103	90S4	22000
5.5	1814	2.9	172.80	H123	100LR6	30000
5.2	1901	1.9	181.07	H103	100LR6	22000
5.1	1942	1.9	181.07	H103	90L6	22000
5.0	1986	2.6	189.19	H123	100LR6	30000
4.9	2039	1.8	194.21	H103	100LR6	22000
4.8	2083	1.8	194.21	H103	90L6	22000
4.6	2178	2.4	207.43	H123	100LR6	30000
4.4	2262	1.6	215.45	H103	100LR6	22000
4.3	2311	1.6	215.45	H103	90L6	22000
4.1	2424	2.2	230.92	H123	100LR6	30000
3.9	2547	1.5	242.59	H103	100LR6	22000
3.8	2602	1.5	242.59	H103	90L6	22000
3.7	2726	1.9	259.64	H123	100LR6	30000

1.50 kW

n2 [rpm]	M2 [Nm]	fs	i	Gear reducer	Motor	Fr2 [N]
1996.5	7	2.8	1.44	H041	90S2	531
1954.8	7	2.7	1.44	H041	80C2	534
1940.2	7	2.7	1.45	HA41	80C2	406
1435.0	9	2.0	2.00	H041	90S2	584
1405.0	10	2.0	2.00	H041	80C2	587
1127.5	12	1.9	2.55	H041	90S2	624
1115.7	12	3.2	1.27	H051	90L4	1604
1103.9	12	1.9	2.55	H041	80C2	627
1102.0	12	1.2	2.55	HA31	80C2	484
1100.0	13	3.2	1.27	H051	90LA4	1611
1057.4	13	1.8	2.71	H041	90S2	634
1035.3	13	1.7	2.71	H041	80C2	638
987.8	14	1.8	1.44	H041	90L4	644
980.5	14	2.8	1.45	HA51	90L4	1403
974.7	14	2.2	2.94	HA51	90S2	1406
973.9	14	1.8	1.44	H041	90LA4	646

5.1 H/HA GEARED MOTORS (50Hz)

1.50 kW

n2 [rpm]	M2 [Nm]	fs	i	Gear reducer	Motor	Fr2 [N]
966.7	14	2.8	1.45	HA51	90LA4	1410
954.3	14	1.3	2.94	HA41	80C2	514
954.3	14	2.1	2.94	HA51	80C2	1416
924.2	15	2.1	3.11	H041	90S2	657
904.9	15	2.0	3.11	H041	80C2	661
887.4	15	4.0	3.17	H051	80C2	1722
799.8	17	2.0	3.59	H041	90S2	682
783.1	17	2.0	3.59	H041	80C2	686
778.3	17	3.9	3.69	H051	90S2	1792
762.0	18	3.8	3.69	H051	80C2	1804
738.6	19	2.2	1.27	H051	100L6	1817
730.7	19	2.2	1.27	H051	100LA6	1823
717.5	19	3.6	4.00	H051	90S2	1837
710.0	20	1.3	2.00	H041	90L4	700
702.5	19	3.5	4.00	H051	80C2	1848
700.0	20	1.3	2.00	H041	90LA4	702
683.3	20	1.7	4.20	H041	90S2	710
669.0	20	1.7	4.20	H041	80C2	713
668.2	21	2.9	2.13	H051	90L4	1873
662.3	21	3.0	1.42	H051	100L6	1877
658.8	21	2.8	2.13	H051	90LA4	1881
655.2	21	2.9	1.42	H051	100LA6	1883
647.7	21	4.0	4.38	HA61	90S2	2411
640.9	21	3.9	4.38	HA61	80C2	2420
604.2	22	1.7	4.75	HA51	90S2	1649
595.5	23	3.2	4.77	H051	90S2	1942
591.6	23	1.7	4.75	HA51	80C2	1661
589.2	23	3.1	4.77	H051	80C2	1948
568.0	24	1.4	5.00	H041	90S2	742
568.0	24	3.7	2.50	HA61	90L4	2519
562.0	24	1.4	5.00	H041	80C2	743
560.0	25	3.6	2.50	HA61	90LA4	2531
557.9	25	1.2	2.55	H041	90L4	741
552.2	25	2.8	2.57	H051	90L4	1982
550.0	25	1.2	2.55	H041	90LA4	743
546.7	25	3.1	5.25	H051	90S2	1991
544.4	26	2.7	2.57	H051	90LA4	1990
535.2	25	3.0	5.25	H051	80C2	2004
524.3	26	1.5	5.45	HA51	90S2	1729
522.4	25	2.4	5.38	HA32	80C2	869
521.8	26	1.5	5.50	H041	90S2	756
515.2	26	1.4	5.45	HA51	80C2	1739
510.9	26	1.4	5.50	H041	80C2	760
493.3	27	2.8	5.82	H051	90S2	2052
483.0	28	2.7	5.82	H051	80C2	2065

5.1 H/HA GEARED MOTORS (50Hz)

1.50 kW

n2 [rpm]	M2 [Nm]	fs	i	Gear reducer	Motor	Fr2 [N]
482.3	29	1.4	2.94	HA51	90L4	1778
475.5	29	1.4	2.94	HA51	90LA4	1786
469.6	29	1.3	6.09	H041	90S2	774
461.3	29	1.3	6.09	H041	80C2	777
457.3	30	1.3	3.11	H041	90L4	773
450.8	31	1.3	3.11	H041	90LA4	775
448.4	31	2.6	3.17	H051	90L4	2105
442.4	32	2.0	2.13	H051	100L6	2112
442.4	32	4.0	2.13	H061	100L6	3363
442.1	31	2.5	3.17	H051	90LA4	2114
437.6	32	2.0	2.13	H051	100LA6	2118
437.6	32	3.9	2.13	H061	100LA6	3374
431.2	31	1.9	6.52	HA32	80C2	927
395.7	35	1.3	3.59	H041	90L4	796
390.2	36	1.3	3.59	H041	90LA4	798
387.3	35	2.2	7.33	H051	90S2	2200
387.3	35	3.7	7.33	H061	90S2	3506
385.1	36	2.5	3.69	H051	90L4	2198
383.2	35	2.1	7.33	H051	80C2	2207
383.2	35	3.6	7.33	H061	80C2	3517
379.7	37	2.5	3.69	H051	90LA4	2207
376.0	37	2.5	2.50	HA61	100L6	2891
372.0	38	2.5	2.50	HA61	100LA6	2901
366.5	37	1.8	7.75	HA61	90S2	2916
365.6	38	1.9	2.57	H051	100L6	2229
365.6	38	3.3	2.57	H061	100L6	3556
362.6	37	1.8	7.75	HA61	80C2	2926
361.7	39	1.9	2.57	H051	100LA6	2236
361.7	39	3.2	2.57	H061	100LA6	3567
355.0	39	2.3	4.00	H051	90L4	2249
355.0	39	3.8	4.00	H061	90L4	3588
353.9	38	2.6	8.11	HA42	90S2	2083
350.0	40	2.3	4.00	H051	90LA4	2258
350.0	40	3.8	4.00	H061	90LA4	3603
346.5	38	1.5	8.11	HA32	80C2	997
346.5	38	2.5	8.11	HA42	80C2	2098
339.1	40	1.9	8.38	H051	90S2	2284
335.5	40	1.9	8.38	H051	80C2	2291
323.9	43	2.6	4.38	HA61	90L4	3038
323.7	41	2.4	8.87	H032	90S2	3475
319.3	44	2.5	4.38	HA61	90LA4	3053
316.9	42	2.3	8.87	H032	80C2	3493
302.4	45	2.1	4.70	H032	90L4	3517
298.1	46	2.1	4.70	H032	90LA4	3529
297.7	47	2.0	4.77	H051	90L4	2361

5.1 H/HA GEARED MOTORS (50Hz)

1.50 kW

n2 [rpm]	M2 [Nm]	fs	i	Gear reducer	Motor	Fr2 [N]
297.7	47	3.4	4.77	H061	90L4	3700
296.8	47	1.8	3.17	H051	100L6	2361
296.8	47	2.9	3.17	H061	100L6	3700
293.7	48	1.8	3.17	H051	100LA6	2368
293.7	48	2.9	3.17	H061	100LA6	3700
293.5	47	2.0	4.77	H051	90LA4	2370
293.5	47	3.4	4.77	H061	90LA4	3700
282.9	47	2.2	10.14	H032	90S2	3591
277.0	48	2.2	10.14	H032	80C2	3609
270.5	51	1.9	5.25	H051	90L4	2423
270.5	51	3.3	5.25	H061	90L4	3700
266.7	52	1.9	5.25	H051	90LA4	2432
266.7	52	3.3	5.25	H061	90LA4	3700
264.0	52	2.7	5.38	HA42	90L4	2297
262.4	51	2.2	10.94	HA42	90S2	2302
260.3	53	2.6	5.38	HA42	90LA4	2308
260.0	53	3.0	5.46	H042	90L4	4776
256.9	52	1.3	10.94	HA32	80C2	1101
256.9	52	2.2	10.94	HA42	80C2	2318
256.3	54	3.0	5.46	H042	90LA4	4794
254.9	55	1.7	3.69	H051	100L6	2459
254.9	55	2.9	3.69	H061	100L6	3700
252.2	56	1.7	3.69	H051	100LA6	2466
252.2	56	2.8	3.69	H061	100LA6	3700
244.1	57	1.8	5.82	H051	90L4	2490
244.1	57	3.0	5.82	H061	90L4	3700
243.4	55	3.9	11.67	HA52	90S2	2950
243.2	55	2.0	11.76	H032	90S2	3720
240.9	55	3.8	11.67	HA52	80C2	2961
240.6	58	1.7	5.82	H051	90LA4	2500
240.6	58	2.9	5.82	H061	90LA4	3700
238.9	56	2.0	11.76	H032	80C2	3735
235.0	60	1.6	4.00	H051	100L6	2500
235.0	60	2.6	4.00	H061	100L6	3700
232.5	60	1.6	4.00	H051	100LA6	2500
232.5	60	2.6	4.00	H061	100LA6	3700
228.2	60	4.0	6.22	HA52	90L4	3014
228.0	60	1.7	6.23	H032	90L4	3753
225.0	61	3.9	6.22	HA52	90LA4	3029
224.7	61	1.7	6.23	H032	90LA4	3764
217.9	63	2.2	6.52	HA42	90L4	2449
214.8	64	2.2	6.52	HA42	90LA4	2461
214.4	65	1.8	4.38	HA61	100L6	3486
214.3	62	1.7	13.25	HA42	90S2	2462
212.1	63	1.7	13.25	HA42	80C2	2471

5.1 H/HA GEARED MOTORS (50Hz)

1.50 kW

n2 [rpm]	M2 [Nm]	fs	i	Gear reducer	Motor	Fr2 [N]
212.1	66	1.7	4.38	HA61	100LA6	3499
211.5	63	3.0	13.57	H042	90S2	5062
208.5	64	2.0	13.72	H032	90S2	3849
207.1	64	2.9	13.57	H042	80C2	5089
204.8	65	2.0	13.72	H032	80C2	3864
197.6	70	2.3	7.19	H042	90L4	5131
197.1	71	1.4	4.77	H051	100L6	2500
197.1	71	2.4	4.77	H061	100L6	3700
195.9	68	3.1	14.50	HA52	90S2	3172
195.8	68	1.9	14.66	H032	90S2	3901
195.0	72	1.4	4.77	H051	100LA6	2500
195.0	72	2.3	4.77	H061	100LA6	3700
194.8	71	2.3	7.19	H042	90LA4	5150
193.8	68	3.1	14.50	HA52	80C2	3183
193.6	72	1.4	7.33	H051	90L4	2500
193.6	72	2.4	7.33	H061	90L4	3700
191.7	69	1.8	14.66	H032	80C2	3918
190.9	73	1.4	7.33	H051	90LA4	2500
190.9	73	2.3	7.33	H061	90LA4	3700
183.6	75	3.2	7.73	HA52	90L4	3241
183.2	76	1.2	7.75	HA61	90L4	3674
182.9	75	1.7	7.76	H032	90L4	3928
182.8	76	3.3	5.14	HA52	100L6	3246
181.0	76	3.2	7.73	HA52	90LA4	3256
180.8	77	3.3	5.14	HA52	100LA6	3257
180.6	77	1.2	7.75	HA61	90LA4	3691
180.4	76	1.6	7.76	H032	90LA4	3939
179.0	78	1.3	5.25	H051	100L6	2500
179.0	78	2.3	5.25	H061	100L6	3700
177.9	75	2.5	15.96	H042	90S2	5291
177.1	79	1.3	5.25	H051	100LA6	2500
177.1	79	2.3	5.25	H061	100LA6	3700
176.1	75	2.5	15.96	H042	80C2	5305
175.1	79	1.7	8.11	HA42	90L4	2634
173.5	77	1.4	16.49	HA42	90S2	2642
172.6	80	1.6	8.11	HA42	90LA4	2647
172.1	81	2.1	5.46	H042	100L6	5305
171.2	78	1.8	16.77	H032	90S2	4008
170.4	78	1.3	16.49	HA42	80C2	2658
170.3	82	2.1	5.46	H042	100LA6	5319
169.6	82	1.2	8.38	H051	90L4	2500
169.6	82	2.1	8.38	H061	90L4	3700
167.9	79	2.8	16.91	HA52	90S2	3339
167.6	79	1.8	16.77	H032	80C2	4025
167.2	83	1.2	8.38	H051	90LA4	2500

5.1 H/HA GEARED MOTORS (50Hz)

1.50 kW

n2 [rpm]	M2 [Nm]	fs	i	Gear reducer	Motor	Fr2 [N]
167.2	83	2.0	8.38	H061	90LA4	3700
166.2	80	2.8	16.91	HA52	80C2	3351
164.1	85	3.2	5.73	H052	100L6	6940
162.4	86	3.2	5.73	H052	100LA6	6961
161.6	87	2.1	5.82	H061	100L6	3700
160.2	86	1.5	8.87	H032	90L4	4028
159.8	88	2.0	5.82	H061	100LA6	3700
159.3	86	2.4	8.91	H042	90L4	5413
157.9	87	1.5	8.87	H032	90LA4	4039
157.1	88	2.4	8.91	H042	90LA4	5431
156.0	85	1.8	18.20	H032	90S2	4079
154.5	91	3.9	6.08	H081	100L6	4000
154.4	86	1.7	18.20	H032	80C2	4087
152.9	92	3.9	6.08	H081	100LA6	4000
151.1	92	2.7	6.22	HA52	100L6	3459
149.5	89	2.1	19.00	H042	90S2	5523
149.5	93	2.7	6.22	HA52	100LA6	3471
148.5	93	4.0	9.56	H052	90L4	7139
147.9	90	2.1	19.00	H042	80C2	5537
147.3	93	3.2	9.64	HA52	90L4	3488
146.4	94	3.9	9.56	H052	90LA4	7166
145.2	95	3.2	9.64	HA52	90LA4	3505
142.7	93	1.6	19.90	H032	90S2	4145
141.2	94	1.6	19.90	H032	80C2	4153
140.2	95	1.2	20.26	HA42	90S2	2837
140.0	98	1.4	10.14	H032	90L4	4123
138.8	96	2.3	20.46	HA52	90S2	3558
138.8	96	3.6	20.46	HA62	90S2	5251
138.7	96	1.2	20.26	HA42	80C2	2847
138.0	100	1.4	10.14	H032	90LA4	4133
137.7	100	2.4	10.31	H042	90L4	5603
137.3	97	2.3	20.46	HA52	80C2	3570
137.3	97	3.6	20.46	HA62	80C2	5270
136.4	102	3.0	6.89	H052	100L6	7298
135.7	101	2.4	10.31	H042	90LA4	5621
135.2	98	1.9	21.00	H042	90S2	5656
134.9	103	3.0	6.89	H052	100LA6	7319
133.8	99	1.9	21.00	H042	80C2	5670
130.8	106	1.6	7.19	H042	100L6	5660
129.8	106	1.4	10.94	HA42	90L4	2910
129.4	107	1.6	7.19	H042	100LA6	5674
128.2	109	1.6	7.33	H061	100L6	3700
128.0	107	1.4	10.94	HA42	90LA4	2924
126.8	111	1.6	7.33	H061	100LA6	3700
125.3	112	3.3	7.50	H081	100L6	4000

5.1 H/HA GEARED MOTORS (50Hz)

1.50 kW

n2 [rpm]	M2 [Nm]	fs	i	Gear reducer	Motor	Fr2 [N]
125.2	106	1.4	22.68	H032	90S2	4236
124.0	113	3.2	7.50	H081	100LA6	4000
123.9	107	1.4	22.68	H032	80C2	4243
123.4	111	3.5	11.51	H052	90L4	7502
122.7	108	1.8	23.15	H042	90S2	5783
121.7	113	2.5	11.67	HA52	90L4	3717
121.7	113	3.9	11.67	HA62	90L4	5486
121.6	113	3.4	11.51	H052	90LA4	7530
121.6	114	2.2	7.73	HA52	100L6	3719
121.6	114	3.5	7.73	HA62	100L6	5489
121.4	109	1.8	23.15	H042	80C2	5797
120.3	114	2.2	11.80	H042	90L4	5776
120.3	115	2.2	7.73	HA52	100LA6	3732
120.3	115	3.5	7.73	HA62	100LA6	5508
120.0	111	1.4	23.83	H032	90S2	4263
120.0	115	2.4	11.67	HA52	90LA4	3735
120.0	115	3.8	11.67	HA62	90LA4	5512
118.6	116	2.2	11.80	H042	90LA4	5794
117.9	113	1.3	23.83	H032	80C2	4274
112.2	125	1.4	8.38	H061	100L6	3700
111.7	119	1.8	25.43	HA52	90S2	3825
111.7	119	2.7	25.43	HA62	90S2	5646
111.3	126	2.9	8.44	H081	100L6	4000
111.0	126	1.4	8.38	H061	100LA6	3700
110.5	120	1.7	25.43	HA52	80C2	3839
110.5	120	2.7	25.43	HA62	80C2	5666
110.2	126	2.8	8.53	H052	100L6	7717
110.1	127	2.9	8.44	H081	100LA6	4000
109.1	122	1.6	26.04	H042	90S2	5936
109.1	127	2.8	8.53	H052	100LA6	7738
107.9	123	1.6	26.04	H042	80C2	5950
107.6	123	1.2	26.39	H032	90S2	4329
106.5	125	1.2	26.39	H032	80C2	4335
105.5	132	1.7	8.91	H042	100L6	5930
104.6	131	1.9	13.57	H042	90L4	5951
104.3	133	1.7	8.91	H042	100LA6	5943
103.3	129	1.6	27.50	H042	90S2	6006
103.2	133	1.9	13.57	H042	90LA4	5968
102.2	130	1.6	27.50	H042	80C2	6019
99.9	133	2.8	28.44	H052	90S2	7955
99.7	138	3.1	14.24	H052	90L4	7925
98.8	134	2.7	28.44	H052	80C2	7976
98.3	141	2.7	9.56	H052	100L6	7945
98.3	140	3.1	14.24	H052	90LA4	7954
97.9	140	2.0	14.50	HA52	90L4	3996

5.1 H/HA GEARED MOTORS (50Hz)

1.50 kW

n2 [rpm]	M2 [Nm]	fs	i	Gear reducer	Motor	Fr2 [N]
97.9	140	3.0	14.50	HA62	90L4	5898
97.5	142	2.2	9.64	HA52	100L6	4002
97.5	142	3.4	9.64	HA62	100L6	5908
97.3	143	2.7	9.56	H052	100LA6	7966
96.6	142	2.0	14.50	HA52	90LA4	4015
96.6	142	2.9	14.50	HA62	90LA4	5926
96.4	144	2.2	9.64	HA52	100LA6	4017
96.4	144	3.4	9.64	HA62	100LA6	5929
95.0	140	1.6	29.89	HA52	90S2	4037
95.0	140	2.4	29.89	HA62	90S2	5958
94.0	141	1.6	29.89	HA52	80C2	4051
94.0	141	2.4	29.89	HA62	80C2	5980
93.3	142	1.5	30.45	H042	90S2	6133
92.3	144	1.5	30.45	H042	80C2	6146
91.1	152	1.7	10.31	H042	100L6	6105
90.2	154	1.6	10.31	H042	100LA6	6118
90.1	147	2.5	31.52	H052	90S2	8000
89.2	149	2.5	31.52	H052	80C2	8000
89.0	155	1.6	15.96	H042	90L4	6146
87.7	157	1.6	15.96	H042	90LA4	6163
86.1	154	2.4	33.00	H052	90S2	8000
85.6	161	2.8	16.59	H052	90L4	8000
85.2	156	2.4	33.00	H052	80C2	8000
84.4	163	2.8	16.59	H052	90LA4	8000
84.0	164	1.8	16.91	HA52	90L4	4207
84.0	164	3.1	16.91	HA62	90L4	6209
83.3	159	1.3	34.10	H042	90S2	6270
82.8	166	1.8	16.91	HA52	90LA4	4227
82.8	166	3.0	16.91	HA62	90LA4	6238
82.4	161	1.3	34.10	H042	80C2	6283
81.7	170	2.4	11.51	H052	100L6	8000
80.8	172	2.4	11.51	H052	100LA6	8000
80.6	172	1.7	11.67	HA52	100L6	4265
80.6	172	2.7	11.67	HA62	100L6	6295
80.4	173	4.0	11.69	H062	100L6	12000
79.7	174	1.5	11.80	H042	100L6	6258
79.7	174	1.7	11.67	HA52	100LA6	4280
79.7	174	2.7	11.67	HA62	100LA6	6317
79.6	175	3.9	11.69	H062	100LA6	12000
78.9	174	2.6	18.00	H052	90L4	8000
78.8	176	1.5	11.80	H042	100LA6	6270
78.5	169	1.3	36.17	HA52	90S2	4302
78.5	169	2.1	36.17	HA62	90S2	6349
77.8	177	2.6	18.00	H052	90LA4	8000
77.7	171	1.3	36.17	HA52	80C2	4317

5.1 H/HA GEARED MOTORS (50Hz)

1.50 kW

n2 [rpm]	M2 [Nm]	fs	i	Gear reducer	Motor	Fr2 [N]
77.7	171	2.1	36.17	HA62	80C2	6372
76.8	173	3.5	36.99	H062	90S2	12000
76.0	175	3.4	36.99	H062	80C2	12000
75.2	176	1.2	37.76	H042	90S2	6388
74.4	178	1.2	37.76	H042	80C2	6400
74.2	187	3.9	12.67	H062	100L6	12000
73.4	189	3.9	12.67	H062	100LA6	12000
72.9	182	2.0	38.98	H052	90S2	8000
72.1	184	2.0	38.98	H052	80C2	8000
71.1	193	2.4	19.97	H052	90L4	8000
70.4	188	3.4	40.33	H062	90S2	12000
70.1	196	2.3	19.97	H052	90LA4	8000
69.7	190	3.3	40.33	H062	80C2	12000
69.4	198	1.5	20.46	HA52	90L4	4482
69.4	198	2.3	20.46	HA62	90L4	6616
68.4	201	1.4	20.46	HA52	90LA4	4504
68.4	201	2.3	20.46	HA62	90LA4	6647
66.0	210	2.1	14.24	H052	100L6	8000
65.5	210	2.2	21.67	H052	90L4	8000
65.3	213	2.1	14.24	H052	100LA6	8000
64.8	214	2.1	14.50	HA62	100L6	6768
64.6	213	2.2	21.67	H052	90LA4	8000
64.1	217	2.0	14.50	HA62	100LA6	6792
63.7	218	3.4	14.75	H062	100L6	12000
63.2	210	1.6	44.95	HA62	90S2	6826
63.1	220	3.3	14.75	H062	100LA6	12000
62.6	212	1.7	45.36	H052	90S2	8000
62.5	212	1.6	44.95	HA62	80C2	6850
61.9	214	1.7	45.36	H052	80C2	8000
61.7	215	3.0	46.06	H062	90S2	12000
61.0	225	3.8	23.27	H062	90L4	12000
61.0	218	2.9	46.06	H062	80C2	12000
60.2	229	3.7	23.27	H062	90LA4	12000
57.8	230	1.6	49.13	H052	90S2	8000
57.7	241	3.5	16.29	H062	100L6	12000
57.5	239	2.0	24.71	H052	90L4	8000
57.4	226	2.8	49.45	H063	90S2	12000
57.2	232	1.6	49.13	H052	80C2	8000
57.1	243	3.5	16.29	H062	100LA6	12000
57.1	233	1.2	49.78	HA62	90S2	7062
57.0	228	1.6	49.80	HA63	90S2	7063
56.7	243	1.9	24.71	H052	90LA4	8000
56.6	245	1.9	16.59	H052	100L6	8000
56.5	235	1.2	49.78	HA62	80C2	7087
56.4	230	1.6	49.80	HA63	80C2	7088

5.1 H/HA GEARED MOTORS (50Hz)

1.50 kW

n2 [rpm]	M2 [Nm]	fs	i	Gear reducer	Motor	Fr2 [N]
56.0	248	1.9	16.59	H052	100LA6	8000
55.8	246	1.7	25.43	HA62	90L4	7113
55.6	250	2.1	16.91	HA62	100L6	7124
55.3	249	3.4	25.70	H062	90L4	12000
55.1	250	1.7	25.43	HA62	90LA4	7147
55.0	253	2.1	16.91	HA62	100LA6	7150
54.5	252	3.4	25.70	H062	90LA4	12000
54.2	254	1.9	26.18	H052	90L4	8000
53.5	257	1.9	26.18	H052	90LA4	8000
53.2	261	3.3	17.67	H062	100L6	12000
52.6	264	3.3	17.67	H062	100LA6	12000
52.2	266	1.8	18.00	H052	100L6	8000
52.0	250	2.6	54.61	H063	90S2	12000
51.7	269	1.8	18.00	H052	100LA6	8000
50.6	262	1.4	56.11	H052	90S2	8000
50.1	265	1.4	56.11	H052	80C2	8000
49.9	275	1.8	28.44	H052	90L4	8000
49.2	279	1.8	28.44	H052	90LA4	8000
48.4	284	2.8	29.33	H062	90L4	12000
48.3	269	1.4	58.81	H053	90S2	8000
47.8	272	1.4	58.81	H053	80C2	8000
47.7	288	2.8	29.33	H062	90LA4	12000
47.5	289	1.6	29.89	HA62	90L4	7507
47.1	295	1.6	19.97	H052	100L6	8000
47.1	276	1.3	60.25	HA63	90S2	7526
46.8	294	1.5	29.89	HA62	90LA4	7543
46.6	298	1.6	19.97	H052	100LA6	8000
46.6	279	1.3	60.25	HA63	80C2	7553
46.3	300	3.0	20.28	H062	100L6	12000
45.9	303	2.9	20.28	H062	100LA6	12000
45.9	289	1.1	61.87	HA62	90S2	7593
45.9	302	1.6	20.46	HA62	100L6	7591
45.5	306	1.6	20.46	HA62	100LA6	7618
45.4	292	1.1	61.87	HA62	80C2	7620
45.1	305	1.6	31.52	H052	90L4	8000
44.4	310	1.6	31.52	H052	90LA4	8000
44.4	310	2.7	32.00	H062	90L4	12000
43.8	314	2.7	32.00	H062	90LA4	12000
43.4	320	1.5	21.67	H052	100L6	8000
43.0	320	1.5	33.00	H052	90L4	8000
42.9	324	1.5	21.67	H052	100LA6	8000
42.4	324	1.5	33.00	H052	90LA4	8000
41.8	311	2.0	68.00	H063	90S2	12000
40.4	344	2.6	23.27	H062	100L6	12000
40.0	348	2.6	23.27	H062	100LA6	12000

5.1 H/HA GEARED MOTORS (50Hz)

1.50 kW

n2 [rpm]	M2 [Nm]	fs	i	Gear reducer	Motor	Fr2 [N]
39.3	350	1.3	36.17	HA62	90L4	7999
39.0	333	1.1	72.75	H053	90S2	8000
38.7	355	1.3	36.17	HA62	90LA4	8000
38.6	336	1.1	72.75	H053	80C2	8000
38.4	358	2.2	36.99	H062	90L4	12000
37.8	363	2.2	36.99	H062	90LA4	12000
36.6	380	2.4	25.70	H062	100L6	12000
36.4	378	1.3	38.98	H052	90L4	8000
36.2	384	2.3	25.70	H062	100LA6	12000
36.0	361	3.7	78.87	H083	90S2	18000
35.9	383	1.3	38.98	H052	90LA4	8000
35.6	365	3.7	78.87	H083	80C2	18000
35.2	391	2.2	40.33	H062	90L4	12000
34.7	396	2.1	40.33	H062	90LA4	12000
33.2	414	3.9	42.75	H082	90L4	18000
33.2	391	3.4	85.56	H083	90S2	18000
33.1	393	1.6	85.82	H063	90S2	12000
32.8	396	3.4	85.56	H083	80C2	18000
32.7	397	1.6	85.82	H063	80C2	12000
32.7	420	3.8	42.75	H082	90LA4	18000
32.0	433	1.9	29.33	H062	100L6	12000
31.7	438	1.9	29.33	H062	100LA6	12000
30.8	446	1.9	46.06	H062	90L4	12000
30.4	452	1.9	46.06	H062	90LA4	12000
30.2	460	3.6	31.15	H082	100L6	18000
30.0	434	1.5	94.76	H063	90S2	12000
29.9	465	3.6	31.15	H082	100LA6	18000
29.7	438	1.5	94.76	H063	80C2	12000
29.5	466	3.4	48.13	H082	90L4	18000
29.4	473	1.9	32.00	H062	100L6	12000
29.1	478	1.9	32.00	H062	100LA6	12000
29.1	473	3.4	48.13	H082	90LA4	18000
29.0	449	3.0	98.09	H083	90S2	18000
28.7	469	1.8	49.45	H063	90L4	12000
28.6	454	3.0	98.09	H083	80C2	18000
28.3	476	1.8	49.45	H063	90LA4	12000
27.3	508	3.3	34.38	H082	100L6	18000
27.1	513	3.3	34.38	H082	100LA6	18000
26.0	518	1.6	54.61	H063	90L4	12000
25.6	525	1.6	54.61	H063	90LA4	12000
25.4	547	1.5	36.99	H062	100L6	12000
25.2	516	2.6	112.78	H083	90S2	18000
25.1	552	1.5	36.99	H062	100LA6	12000
25.1	536	3.0	56.53	H083	90L4	18000
24.9	522	2.6	112.78	H083	80C2	18000

5.1 H/HA GEARED MOTORS (50Hz)

1.50 kW

n2 [rpm]	M2 [Nm]	fs	i	Gear reducer	Motor	Fr2 [N]
24.8	544	2.9	56.53	H083	90LA4	18000
24.3	572	2.9	38.70	H082	100L6	18000
24.1	540	1.2	118.00	H063	90S2	12000
24.0	578	2.9	38.70	H082	100LA6	18000
23.8	546	1.2	118.00	H063	80C2	12000
23.3	596	1.5	40.33	H062	100L6	12000
23.1	602	1.5	40.33	H062	100LA6	12000
22.8	569	2.4	124.44	H083	90S2	18000
22.6	575	2.3	124.44	H083	80C2	18000
22.0	632	2.7	42.75	H082	100L6	18000
21.8	638	2.6	42.75	H082	100LA6	18000
20.9	645	1.3	68.00	H063	90L4	12000
20.6	654	1.3	68.00	H063	90LA4	12000
20.4	681	1.3	46.06	H062	100L6	12000
20.2	688	1.3	46.06	H062	100LA6	12000
20.0	650	2.1	142.15	H083	90S2	18000
19.9	678	2.7	71.48	H083	90L4	18000
19.8	657	2.1	142.15	H083	80C2	18000
19.6	688	2.6	71.48	H083	90LA4	18000
19.5	711	2.4	48.13	H082	100L6	18000
19.3	719	2.3	48.13	H082	100LA6	18000
19.0	716	1.2	49.45	H063	100L6	12000
18.8	723	1.2	49.45	H063	100LA6	12000
18.4	708	1.9	154.76	H083	90S2	18000
18.2	716	1.9	154.76	H083	80C2	18000
18.0	748	2.4	78.87	H083	90L4	18000
17.8	759	2.4	78.87	H083	90LA4	18000
17.5	743	1.8	162.35	H083	90S2	18000
17.3	751	1.8	162.35	H083	80C2	18000
16.6	818	2.1	56.53	H083	100L6	18000
16.6	811	2.2	85.56	H083	90L4	18000
16.5	827	2.0	56.53	H083	100LA6	18000
16.4	823	2.2	85.56	H083	90LA4	18000
15.9	820	1.6	179.13	H083	90S2	18000
15.7	828	1.6	179.13	H083	80C2	18000
14.6	893	1.5	195.07	H083	90S2	18000
14.5	930	1.9	98.09	H083	90L4	18000
14.4	902	1.5	195.07	H083	80C2	18000
14.3	943	1.9	98.09	H083	90LA4	18000
13.5	1008	3.6	69.69	H103	100L6	22000
13.3	1019	3.6	69.69	H103	100LA6	22000
13.2	1034	1.8	71.48	H083	100L6	18000
13.0	1045	1.8	71.48	H083	100LA6	18000
12.7	1019	1.3	222.78	H083	90S2	18000
12.6	1030	1.3	222.78	H083	80C2	18000

5.1 H/HA GEARED MOTORS (50Hz)

1.50 kW

n2 [rpm]	M2 [Nm]	fs	i	Gear reducer	Motor	Fr2 [N]
12.6	1069	1.7	112.78	H083	90L4	18000
12.4	1085	1.7	112.78	H083	90LA4	18000
11.9	1141	1.7	78.87	H083	100L6	18000
11.8	1153	1.6	78.87	H083	100LA6	18000
11.8	1155	3.2	79.82	H103	100L6	22000
11.7	1167	3.1	79.82	H103	100LA6	22000
11.4	1180	1.5	124.44	H083	90L4	18000
11.3	1197	1.5	124.44	H083	90LA4	18000
11.2	1218	3.0	84.16	H103	100L6	22000
11.1	1231	3.0	84.16	H103	100LA6	22000
11.0	1238	1.5	85.56	H083	100L6	18000
10.9	1251	1.5	85.56	H083	100LA6	18000
10.3	1316	4.0	89.97	H123	100LA6	30000
10.1	1351	2.7	93.36	H103	100L6	22000
10.0	1348	1.3	142.15	H083	90L4	18000
10.0	1365	2.7	93.36	H103	100LA6	22000
9.9	1360	2.6	143.42	H103	90L4	22000
9.8	1367	1.3	142.15	H083	90LA4	18000
9.8	1379	2.5	143.42	H103	90LA4	22000
9.6	1419	1.3	98.09	H083	100L6	18000
9.5	1434	1.3	98.09	H083	100LA6	18000
9.4	1448	2.5	100.07	H103	100L6	22000
9.4	1451	3.6	100.29	H123	100L6	30000
9.3	1463	2.5	100.07	H103	100LA6	22000
9.3	1467	3.6	100.29	H123	100LA6	30000
9.2	1468	1.2	154.76	H083	90L4	18000
9.0	1489	1.2	154.76	H083	90LA4	18000
8.8	1529	1.2	162.35	H083	90L4	18000
8.8	1525	2.3	160.82	H103	90L4	22000
8.7	1547	2.3	160.82	H103	90LA4	22000
8.7	1568	3.3	108.34	H123	100L6	30000
8.6	1584	3.3	108.34	H123	100LA6	30000
7.9	1716	3.1	118.62	H123	100L6	30000
7.8	1748	2.1	120.84	H103	100L6	22000
7.8	1717	2.0	181.07	H103	90L4	22000
7.8	1735	3.0	118.62	H123	100LA6	30000
7.7	1767	2.1	120.84	H103	100LA6	22000
7.7	1742	2.0	181.07	H103	90LA4	22000
7.3	1842	1.9	194.21	H103	90L4	22000
7.3	1854	2.8	128.18	H123	100L6	30000
7.3	1874	2.8	128.18	H123	100LA6	30000
7.2	1868	1.9	194.21	H103	90LA4	22000
7.0	1940	1.9	134.06	H103	100L6	22000
6.9	1960	1.9	134.06	H103	100LA6	22000
6.6	2075	1.8	143.42	H103	100L6	22000

5.1 H/HA GEARED MOTORS (50Hz)

1.50 kW

n2 [rpm]	M2 [Nm]	fs	i	Gear reducer	Motor	Fr2 [N]
6.6	2043	1.7	215.45	H103	90L4	22000
6.5	2097	1.8	143.42	H103	100LA6	22000
6.5	2072	1.7	215.45	H103	90LA4	22000
6.5	2095	2.5	144.79	H123	100L6	30000
6.4	2117	2.5	144.79	H123	100LA6	30000
6.1	2246	2.3	155.22	H123	100L6	30000
6.0	2270	2.3	155.22	H123	100LA6	30000
5.9	2300	1.6	242.59	H103	90L4	22000
5.8	2327	1.6	160.82	H103	100L6	22000
5.8	2352	1.6	160.82	H103	100LA6	22000
5.8	2333	1.5	242.59	H103	90LA4	22000
5.4	2500	2.1	172.80	H123	100L6	30000
5.4	2527	2.1	172.80	H123	100LA6	30000
5.2	2620	1.4	181.07	H103	100L6	22000
5.1	2648	1.4	181.07	H103	100LA6	22000
5.0	2737	1.9	189.19	H123	100L6	30000
4.9	2767	1.9	189.19	H123	100LA6	30000
4.8	2810	1.3	194.21	H103	100L6	22000
4.8	2840	1.3	194.21	H103	100LA6	22000
4.5	3001	1.7	207.43	H123	100L6	30000
4.5	3033	1.7	207.43	H123	100LA6	30000
4.1	3341	1.6	230.92	H123	100L6	30000
4.0	3377	1.6	230.92	H123	100LA6	30000
3.6	3756	1.4	259.64	H123	100L6	30000
3.6	3797	1.4	259.64	H123	100LA6	30000

1.85 kW

n2 [rpm]	M2 [Nm]	fs	i	Gear reducer	Motor	Fr2 [N]
1100.0	16	2.6	1.27	H051	90LB4	1598
986.4	17	3.5	1.42	H051	90LB4	1651
973.9	18	1.4	1.44	H041	90LB4	631
966.7	18	2.3	1.45	HA51	90LB4	1410
730.7	24	1.8	1.27	H051	100LB6	1803
697.5	25	3.8	1.33	HA61	100LB6	2353
692.1	25	3.4	1.34	H061	100LB6	2915
658.8	26	2.3	2.13	H051	90LB4	1860
655.2	26	2.4	1.42	H051	100LB6	1861
560.0	31	2.9	2.50	HA61	90LB4	2531
544.4	31	2.2	2.57	H051	90LB4	1964
544.4	31	3.8	2.57	H061	90LB4	3130
442.1	39	2.1	3.17	H051	90LB4	2082
442.1	39	3.4	3.17	H061	90LB4	3324
437.6	40	1.6	2.13	H051	100LB6	2086

5.1 H/HA GEARED MOTORS (50Hz)

1.85 kW

n2 [rpm]	M2 [Nm]	fs	i	Gear reducer	Motor	Fr2 [N]
437.6	40	3.2	2.13	H061	100LB6	3331
379.7	45	2.0	3.69	H051	90LB4	2170
379.7	45	3.3	3.69	H061	90LB4	3470
372.0	47	2.0	2.50	HA61	100LB6	2901
361.7	48	1.5	2.57	H051	100LB6	2196
361.7	48	2.6	2.57	H061	100LB6	3515
350.0	49	1.8	4.00	H051	90LB4	2218
350.0	49	3.1	4.00	H061	90LB4	3550
319.3	54	2.0	4.38	HA61	90LB4	3053
298.1	57	1.7	4.70	H032	90LB4	3417
293.7	59	1.4	3.17	H051	100LB6	2319
293.7	59	2.3	3.17	H061	100LB6	3700
293.5	58	1.6	4.77	H051	90LB4	2322
293.5	58	2.7	4.77	H061	90LB4	3700
272.2	62	3.9	5.14	HA52	90LB4	2842
266.7	64	1.6	5.25	H051	90LB4	2380
266.7	64	2.6	5.25	H061	90LB4	3700
260.3	65	2.1	5.38	HA42	90LB4	2308
256.3	66	2.4	5.46	H042	90LB4	4690
252.2	69	1.4	3.69	H051	100LB6	2410
252.2	69	2.3	3.69	H061	100LB6	3700
244.4	69	3.7	5.73	H052	90LB4	6117
240.6	71	1.4	5.82	H051	90LB4	2441
240.6	71	2.4	5.82	H061	90LB4	3700
232.5	74	1.3	4.00	H051	100LB6	2458
232.5	74	2.1	4.00	H061	100LB6	3700
225.0	75	3.2	6.22	HA52	90LB4	3029
224.7	75	1.4	6.23	H032	90LB4	3616
214.8	79	1.8	6.52	HA42	90LB4	2461
212.1	82	1.4	4.38	HA61	100LB6	3499
203.1	84	3.5	6.89	H052	90LB4	6438
199.3	87	3.9	4.67	H081	100LB6	4000
195.0	89	1.9	4.77	H061	100LB6	3700
194.8	87	1.8	7.19	H042	90LB4	5013
190.9	90	1.9	7.33	H061	90LB4	3700
186.7	92	3.8	7.50	H081	90LB4	4000
181.0	94	2.6	7.73	HA52	90LB4	3256
180.8	95	2.7	5.14	HA52	100LB6	3257
177.1	98	1.8	5.25	H061	100LB6	3700
170.3	101	1.7	5.46	H042	100LB6	5162
167.9	103	3.4	5.54	H081	100LB6	4000
167.2	103	1.7	8.38	H061	90LB4	3700
165.8	103	3.4	8.44	H081	90LB4	4000
164.2	103	3.3	8.53	H052	90LB4	6815
162.4	105	2.6	5.73	H052	100LB6	6827

5.1 H/HA GEARED MOTORS (50Hz)

1.85 kW

n2 [rpm]	M2 [Nm]	fs	i	Gear reducer	Motor	Fr2 [N]
159.8	108	1.6	5.82	H061	100LB6	3700
157.1	108	1.9	8.91	H042	90LB4	5262
152.9	113	3.2	6.08	H081	100LB6	4000
149.5	115	2.2	6.22	HA52	100LB6	3471
149.5	115	3.5	6.22	HA62	100LB6	5123
146.4	116	3.2	9.56	H052	90LB4	7020
145.2	117	2.6	9.64	HA52	90LB4	3505
145.2	117	3.9	9.64	HA62	90LB4	5173
135.7	125	1.9	10.31	H042	90LB4	5425
134.9	127	2.4	6.89	H052	100LB6	7159
126.8	136	1.3	7.33	H061	100LB6	3700
124.0	140	2.6	7.50	H081	100LB6	4000
121.6	139	2.8	11.51	H052	90LB4	7354
120.3	142	1.8	7.73	HA52	100LB6	3732
120.3	142	2.8	7.73	HA62	100LB6	5508
120.0	141	2.0	11.67	HA52	90LB4	3735
120.0	141	3.1	11.67	HA62	90LB4	5512
118.6	143	1.7	11.80	H042	90LB4	5569
110.1	157	2.3	8.44	H081	100LB6	4000
109.1	157	2.3	8.53	H052	100LB6	7540
103.2	164	1.5	13.57	H042	90LB4	5710
99.1	173	3.6	9.39	H062	100LB6	12000
98.3	172	2.5	14.24	H052	90LB4	7736
97.3	176	2.2	9.56	H052	100LB6	7744
96.6	176	1.6	14.50	HA52	90LB4	4015
96.6	176	2.4	14.50	HA62	90LB4	5926
96.4	178	1.8	9.64	HA52	100LB6	4017
96.4	178	2.7	9.64	HA62	100LB6	5929
94.9	179	3.9	14.75	H062	90LB4	12000
84.4	201	2.2	16.59	H052	90LB4	8000
82.8	205	1.5	16.91	HA52	90LB4	4227
82.8	205	2.4	16.91	HA62	90LB4	6238
80.8	212	1.9	11.51	H052	100LB6	8000
79.7	215	2.1	11.67	HA62	100LB6	6317
79.6	215	3.2	11.69	H062	100LB6	12000
79.2	214	3.9	17.67	H062	90LB4	12000
77.8	218	2.1	18.00	H052	90LB4	8000
73.4	233	3.2	12.67	H062	100LB6	12000
70.1	242	1.9	19.97	H052	90LB4	8000
69.0	246	3.5	20.28	H062	90LB4	12000
68.4	248	1.9	20.46	HA62	90LB4	6647
65.3	262	1.7	14.24	H052	100LB6	8000
64.6	262	1.8	21.67	H052	90LB4	8000
64.1	267	1.7	14.50	HA62	100LB6	6792
63.1	272	2.7	14.75	H062	100LB6	12000

5.1 H/HA GEARED MOTORS (50Hz)

1.85 kW

n2 [rpm]	M2 [Nm]	fs	i	Gear reducer	Motor	Fr2 [N]
60.2	282	3.0	23.27	H062	90LB4	12000
57.1	300	2.8	16.29	H062	100LB6	12000
56.7	299	1.6	24.71	H052	90LB4	8000
56.0	306	1.5	16.59	H052	100LB6	8000
55.1	308	1.4	25.43	HA62	90LB4	7147
55.0	312	1.7	16.91	HA62	100LB6	7150
54.5	311	2.7	25.70	H062	90LB4	12000
53.5	317	1.5	26.18	H052	90LB4	8000
52.6	325	2.7	17.67	H062	100LB6	12000
51.7	332	1.5	18.00	H052	100LB6	8000
49.2	345	1.4	28.44	H052	90LB4	8000
47.7	355	2.3	29.33	H062	90LB4	12000
45.9	374	2.4	20.28	H062	100LB6	12000
44.4	382	1.3	31.52	H052	90LB4	8000
43.8	388	2.2	32.00	H062	90LB4	12000
42.4	400	1.2	33.00	H052	90LB4	8000
40.7	416	3.8	34.38	H082	90LB4	18000
40.0	429	2.1	23.27	H062	100LB6	12000
37.8	448	1.8	36.99	H062	90LB4	12000
36.2	473	1.9	25.70	H062	100LB6	12000
36.2	469	3.4	38.70	H082	90LB4	18000
35.0	490	3.4	26.60	H082	100LB6	18000
34.7	489	1.7	40.33	H062	90LB4	12000
33.4	514	3.3	27.88	H082	100LB6	18000
32.7	518	3.1	42.75	H082	90LB4	18000
31.7	540	1.6	29.33	H062	100LB6	12000
30.4	558	1.5	46.06	H062	90LB4	12000
29.9	574	2.9	31.15	H082	100LB6	18000
29.1	589	1.5	32.00	H062	100LB6	12000
29.1	583	2.7	48.13	H082	90LB4	18000
28.3	587	1.4	49.45	H063	90LB4	12000
27.1	633	2.7	34.38	H082	100LB6	18000
25.6	648	1.3	54.61	H063	90LB4	12000
24.8	671	2.4	56.53	H083	90LB4	18000
24.0	713	2.4	38.70	H082	100LB6	18000
21.8	787	2.1	42.75	H082	100LB6	18000
19.6	848	2.1	71.48	H083	90LB4	18000
19.3	887	1.9	48.13	H082	100LB6	18000
18.1	949	3.7	51.52	H102	100LB6	22000
17.8	936	1.9	78.87	H083	90LB4	18000
16.5	1019	1.6	56.53	H083	100LB6	18000
16.4	1015	1.8	85.56	H083	90LB4	18000
14.3	1164	1.5	98.09	H083	90LB4	18000
13.3	1257	2.9	69.69	H103	100LB6	22000
13.0	1289	1.5	71.48	H083	100LB6	18000

5.1 H/HA GEARED MOTORS (50Hz)

1.85 kW

n2 [rpm]	M2 [Nm]	fs	i	Gear reducer	Motor	Fr2 [N]
12.6	1329	3.9	73.71	H123	100LB6	30000
12.4	1338	1.3	112.78	H083	90LB4	18000
11.8	1423	1.3	78.87	H083	100LB6	18000
11.7	1440	2.6	79.82	H103	100LB6	22000
11.3	1476	1.2	124.44	H083	90LB4	18000
11.2	1503	3.5	83.34	H123	100LB6	30000
11.1	1518	2.4	84.16	H103	100LB6	22000
10.3	1623	3.2	89.97	H123	100LB6	30000
10.0	1684	2.2	93.36	H103	100LB6	22000
9.8	1701	2.1	143.42	H103	90LB4	22000
9.3	1805	2.0	100.07	H103	100LB6	22000
9.3	1809	2.9	100.29	H123	100LB6	30000
8.7	1908	1.8	160.82	H103	90LB4	22000
8.6	1954	2.7	108.34	H123	100LB6	30000
7.8	2139	2.5	118.62	H123	100LB6	30000
7.7	2179	1.7	120.84	H103	100LB6	22000
7.7	2148	1.6	181.07	H103	90LB4	22000
7.3	2312	2.3	128.18	H123	100LB6	30000
7.2	2304	1.5	194.21	H103	90LB4	22000
6.9	2418	1.5	134.06	H103	100LB6	22000
6.5	2587	1.4	143.42	H103	100LB6	22000
6.5	2556	1.4	215.45	H103	90LB4	22000
6.4	2611	2.0	144.79	H123	100LB6	30000
6.0	2800	1.9	155.22	H123	100LB6	30000
5.8	2901	1.3	160.82	H103	100LB6	22000
5.4	3117	1.7	172.80	H123	100LB6	30000
4.9	3412	1.5	189.19	H123	100LB6	30000
4.5	3741	1.4	207.43	H123	100LB6	30000
4.0	4165	1.3	230.92	H123	100LB6	30000

2.20 kW

n2 [rpm]	M2 [Nm]	fs	i	Gear reducer	Motor	Fr2 [N]
2262.9	9	3.5	1.27	H051	90L2	1275
2003.5	10	1.9	1.44	H041	90L2	516
1988.6	10	3.0	1.45	HA51	90L2	1109
1440.0	14	1.4	2.00	H041	90L2	563
1355.3	15	3.1	2.13	H051	90L2	1492
1152.0	17	4.0	2.50	HA61	90L2	1990
1147.1	18	2.3	1.27	H051	112MR4	1565
1123.6	18	1.3	2.55	H041	90L2	598
1123.6	18	2.2	1.27	H051	100LA4	1575
1120.0	18	3.0	2.57	H051	90L2	1579
1061.1	19	1.2	2.71	H041	90L2	606

5.1 H/HA GEARED MOTORS (50Hz)

2.20 kW

n2 [rpm]	M2 [Nm]	fs	i	Gear reducer	Motor	Fr2 [N]
1028.6	20	3.0	1.42	H051	112MR4	1617
1007.5	20	3.0	1.42	H051	100LA4	1627
978.1	20	1.5	2.94	HA51	90L2	1404
927.5	21	1.4	3.11	H041	90L2	626
909.5	22	2.8	3.17	H051	90L2	1680
802.6	25	1.4	3.59	H041	90L2	646
781.0	25	2.7	3.69	H051	90L2	1755
754.3	27	1.5	1.27	H051	112M6	1768
730.7	28	1.5	1.27	H051	112MA6	1784
720.0	29	3.3	1.33	HA61	112M6	2328
715.0	28	2.5	4.00	H051	90L2	1801
714.4	29	2.9	1.34	H061	112M6	2861
697.5	30	3.2	1.33	HA61	112MA6	2353
692.1	30	2.8	1.34	H061	112MA6	2888
687.1	30	2.0	2.13	H051	112MR4	1817
685.7	29	1.2	4.20	H041	90L2	667
676.4	30	2.1	1.42	H051	112M6	1823
672.9	30	2.0	2.13	H051	100LA4	1827
672.9	30	4.0	2.13	H061	100LA4	2913
656.8	30	2.8	4.38	HA61	90L2	2400
655.2	31	2.0	1.42	H051	112MA6	1840
603.9	33	2.2	4.77	H051	90L2	1889
603.9	33	3.7	4.77	H061	90L2	3013
602.1	33	1.1	4.75	HA51	90L2	1651
584.0	35	2.6	2.50	HA61	112MR4	2496
572.0	36	2.5	2.50	HA61	100LA4	2514
567.8	36	2.0	2.57	H051	112MR4	1916
567.8	36	3.3	2.57	H061	112MR4	3059
556.1	37	1.9	2.57	H051	100LA4	1927
556.1	37	3.3	2.57	H061	100LA4	3078
548.6	36	2.1	5.25	H051	90L2	1940
495.0	40	1.9	5.82	H051	90L2	1995
495.0	40	3.2	5.82	H061	90L2	3189
461.1	44	1.8	3.17	H051	112MR4	2027
461.1	44	2.9	3.17	H061	112MR4	3244
451.8	46	1.4	2.13	H051	112M6	2036
451.8	46	2.8	2.13	H061	112M6	3260
451.6	45	1.8	3.17	H051	100LA4	2038
451.6	45	2.9	3.17	H061	100LA4	3263
437.6	47	1.3	2.13	H051	112MA6	2053
437.6	47	2.7	2.13	H061	112MA6	3289
395.9	51	1.7	3.69	H051	112MR4	2110
395.9	51	2.9	3.69	H061	112MR4	3383
392.7	50	1.5	7.33	H051	90L2	2122
392.7	50	2.5	7.33	H061	90L2	3401

5.1 H/HA GEARED MOTORS (50Hz)

2.20 kW

n2 [rpm]	M2 [Nm]	fs	i	Gear reducer	Motor	Fr2 [N]
387.8	53	1.7	3.69	H051	100LA4	2121
387.8	53	2.9	3.69	H061	100LA4	3402
384.0	54	1.8	2.50	HA61	112M6	2871
373.3	55	1.3	2.57	H051	112M6	2140
373.3	55	2.3	2.57	H061	112M6	3434
372.0	55	1.7	2.50	HA61	112MA6	2901
371.6	53	1.3	7.75	HA61	90L2	2902
365.0	56	1.6	4.00	H051	112MR4	2155
365.0	56	2.7	4.00	H061	112MR4	3458
361.7	57	1.3	2.57	H051	112MA6	2157
361.7	57	2.2	2.57	H061	112MA6	3464
357.5	57	1.6	4.00	H051	100LA4	2166
357.5	57	2.6	4.00	H061	100LA4	3478
355.1	55	1.8	8.11	HA42	90L2	2081
341.5	58	1.3	8.38	H051	90L2	2200
333.0	61	1.8	4.38	HA61	112MR4	3010
324.8	60	1.6	8.87	H032	90L2	3274
323.9	63	1.7	4.38	HA61	100LA4	3038
310.9	65	1.5	4.70	H032	112MR4	3279
306.1	67	1.4	4.77	H051	112MR4	2251
306.1	67	2.4	4.77	H061	112MR4	3623
303.2	68	1.2	3.17	H051	112M6	2254
303.2	68	2.0	3.17	H061	112M6	3629
302.4	67	1.4	4.70	H032	100LA4	3297
299.8	68	1.4	4.77	H051	100LA4	2263
299.8	68	2.4	4.77	H061	100LA4	3643
293.7	70	1.9	3.17	H061	112MA6	3658
283.9	69	1.5	10.14	H032	90L2	3361
283.9	71	3.4	5.14	HA52	112MR4	2803
278.1	73	1.4	5.25	H051	112MR4	2304
278.1	73	2.3	5.25	H061	112MR4	3700
278.1	73	3.3	5.14	HA52	100LA4	2822
272.4	75	1.3	5.25	H051	100LA4	2315
272.4	75	2.3	5.25	H061	100LA4	3700
267.3	75	2.1	5.46	H042	112MR4	4541
263.3	74	1.5	10.94	HA42	90L2	2299
260.3	79	2.0	3.69	H061	112M6	3700
260.0	78	2.1	5.46	H042	100LA4	4571
254.9	79	3.3	5.73	H052	112MR4	5962
252.2	82	1.9	3.69	H061	112MA6	3700
250.9	81	1.2	5.82	H051	112MR4	2360
250.9	81	2.1	5.82	H061	112MR4	3700
249.9	82	4.0	3.72	H081	112MA6	4000
249.7	81	3.2	5.73	H052	100LA4	5995
246.9	79	2.7	11.67	HA52	90L2	2936

5.1 H/HA GEARED MOTORS (50Hz)

2.20 kW

n2 [rpm]	M2 [Nm]	fs	i	Gear reducer	Motor	Fr2 [N]
244.1	84	1.2	5.82	H051	100LA4	2375
244.1	84	2.0	5.82	H061	100LA4	3700
243.2	80	1.4	11.76	H032	90L2	3455
240.0	86	1.8	4.00	H061	112M6	3700
240.0	86	3.9	4.00	H081	112M6	4000
235.1	87	3.9	6.08	H081	100LA4	4000
234.6	86	2.8	6.22	HA52	112MR4	2986
232.5	89	1.8	4.00	H061	112MA6	3700
232.5	89	3.8	4.00	H081	112MA6	4000
229.8	88	2.7	6.22	HA52	100LA4	3007
217.4	90	1.2	13.25	HA42	90L2	2451
212.2	92	2.0	13.57	H042	90L2	4815
211.8	95	3.0	6.89	H052	112MR4	6264
209.9	93	1.4	13.72	H032	90L2	3537
206.0	98	3.0	6.89	H052	100LA4	6309
205.7	100	3.4	4.67	H081	112M6	4000
203.1	99	1.6	7.19	H042	112MR4	4833
201.3	102	1.6	4.77	H061	112M6	3700
199.3	103	3.3	4.67	H081	112MA6	4000
199.1	102	1.7	7.33	H061	112MR4	3700
197.6	102	1.6	7.19	H042	100LA4	4862
197.2	99	2.1	14.50	HA52	90L2	3164
197.2	99	3.2	14.50	HA62	90L2	4671
195.1	100	1.3	14.66	H032	90L2	3574
195.0	106	1.6	4.77	H061	112MA6	3700
195.0	105	1.6	7.33	H061	100LA4	3700
194.7	105	3.3	7.50	H081	112MR4	4000
189.3	108	3.3	7.50	H081	100LA4	4000
188.8	107	2.2	7.73	HA52	112MR4	3211
188.8	107	3.6	7.73	HA62	112MR4	4739
186.7	109	2.3	5.14	HA52	112M6	3223
186.7	109	3.7	5.14	HA62	112M6	4757
183.6	110	2.2	7.73	HA52	100LA4	3241
183.6	110	3.5	7.73	HA62	100LA4	4783
182.9	113	1.6	5.25	H061	112M6	3700
180.8	113	2.2	5.14	HA52	112MA6	3257
180.8	113	3.5	5.14	HA62	112MA6	4808
179.2	109	1.7	15.96	H042	90L2	4995
177.1	116	1.5	5.25	H061	112MA6	3700
175.7	116	1.4	5.46	H042	112M6	4972
174.3	117	1.5	8.38	H061	112MR4	3700
173.3	119	2.9	5.54	H081	112M6	4000
172.9	118	3.0	8.44	H081	112MR4	4000
171.2	118	2.9	8.53	H052	112MR4	6614
170.6	114	1.2	16.77	H032	90L2	3633

5.1 H/HA GEARED MOTORS (50Hz)

2.20 kW

n2 [rpm]	M2 [Nm]	fs	i	Gear reducer	Motor	Fr2 [N]
169.6	120	1.4	8.38	H061	100LA4	3700
169.1	115	2.0	16.91	HA52	90L2	3331
169.1	115	3.3	16.91	HA62	90L2	4917
168.2	121	2.9	8.44	H081	100LA4	4000
167.9	123	2.8	5.54	H081	112MA6	4000
167.6	122	2.2	5.73	H052	112M6	6642
166.5	121	2.8	8.53	H052	100LA4	6660
165.0	125	1.4	5.82	H061	112M6	3700
163.8	123	1.7	8.91	H042	112MR4	5052
162.4	125	2.2	5.73	H052	112MA6	6694
159.8	129	1.4	5.82	H061	112MA6	3700
159.3	127	1.7	8.91	H042	100LA4	5079
157.8	130	2.7	6.08	H081	112M6	4000
157.1	124	1.2	18.20	H032	90L2	3664
154.3	132	1.9	6.22	HA52	112M6	3434
154.3	132	3.0	6.22	HA62	112M6	5069
152.9	135	2.7	6.08	H081	112MA6	4000
152.7	132	2.8	9.56	H052	112MR4	6804
151.4	133	2.3	9.64	HA52	112MR4	3456
151.4	133	3.5	9.64	HA62	112MR4	5101
150.5	129	1.5	19.00	H042	90L2	5172
149.5	136	1.8	6.22	HA52	112MA6	3471
149.5	136	2.9	6.22	HA62	112MA6	5123
148.5	136	2.7	9.56	H052	100LA4	6850
147.3	137	2.2	9.64	HA52	100LA4	3488
147.3	137	3.4	9.64	HA62	100LA4	5149
143.7	135	1.1	19.90	H032	90L2	3692
141.6	142	1.7	10.31	H042	112MR4	5191
139.8	139	1.6	20.46	HA52	90L2	3549
139.8	139	2.5	20.46	HA62	90L2	5239
139.3	146	2.1	6.89	H052	112M6	6946
137.7	147	1.6	10.31	H042	100LA4	5216
136.2	143	1.3	21.00	H042	90L2	5269
134.9	151	2.0	6.89	H052	112MA6	6998
129.9	157	3.7	7.39	H062	112M6	12000
128.0	161	2.3	7.50	H081	112M6	4000
126.8	159	2.5	11.51	H052	112MR4	7109
125.8	162	3.6	7.39	H062	112MA6	12000
125.1	161	1.7	11.67	HA52	112MR4	3683
125.1	161	2.7	11.67	HA62	112MR4	5436
124.1	164	1.5	7.73	HA52	112M6	3693
124.1	164	2.4	7.73	HA62	112M6	5450
124.0	166	2.2	7.50	H081	112MA6	4000
123.7	163	1.5	11.80	H042	112MR4	5310
123.6	158	1.2	23.15	H042	90L2	5359

5.1 H/HA GEARED MOTORS (50Hz)

2.20 kW

n2 [rpm]	M2 [Nm]	fs	i	Gear reducer	Motor	Fr2 [N]
123.4	163	2.4	11.51	H052	100LA4	7155
121.7	166	1.7	11.67	HA52	100LA4	3717
121.7	166	2.7	11.67	HA62	100LA4	5486
121.5	166	3.9	11.69	H062	100LA4	12000
120.3	168	1.5	11.80	H042	100LA4	5333
120.3	169	1.5	7.73	HA52	112MA6	3732
120.3	169	2.4	7.73	HA62	112MA6	5508
114.3	180	3.8	8.40	H101	112M6	5000
113.7	181	2.0	8.44	H081	112M6	4000
112.9	180	3.5	8.50	H062	112M6	12000
112.6	181	2.0	8.53	H052	112M6	7291
112.5	173	1.2	25.43	HA52	90L2	3816
112.5	173	1.9	25.43	HA62	90L2	5633
112.1	180	3.9	12.67	H062	100LA4	12000
110.7	186	3.7	8.40	H101	112MA6	5000
110.1	187	2.0	8.44	H081	112MA6	4000
109.4	186	3.4	8.50	H062	112MA6	12000
109.1	187	1.9	8.53	H052	112MA6	7341
104.0	187	1.1	27.50	H042	90L2	5503
102.5	197	2.2	14.24	H052	112MR4	7452
102.3	199	3.2	9.39	H062	112M6	12000
100.7	200	1.4	14.50	HA52	112MR4	3959
100.7	200	2.1	14.50	HA62	112MR4	5844
100.6	194	1.9	28.44	H052	90L2	7529
100.4	203	1.9	9.56	H052	112M6	7472
99.7	202	2.1	14.24	H052	100LA4	7495
99.6	205	1.5	9.64	HA52	112M6	3974
99.6	205	2.4	9.64	HA62	112M6	5866
99.1	206	3.1	9.39	H062	112MA6	12000
99.0	204	3.4	14.75	H062	112MR4	12000
97.9	206	2.0	14.50	HA62	100LA4	5898
97.3	209	1.9	9.56	H052	112MA6	7521
96.4	211	1.5	9.64	HA52	112MA6	4017
96.4	211	2.3	9.64	HA62	112MA6	5929
96.3	210	3.3	14.75	H062	100LA4	12000
95.7	203	1.7	29.89	HA62	90L2	5944
90.8	214	1.7	31.52	H052	90L2	7694
89.6	225	3.6	16.29	H062	112MR4	12000
88.0	229	2.0	16.59	H052	112MR4	7689
87.2	231	3.5	16.29	H062	100LA4	12000
86.7	225	1.6	33.00	H052	90L2	7766
86.3	234	2.1	16.91	HA62	112MR4	6152
85.6	236	1.9	16.59	H052	100LA4	7730
84.0	240	2.1	16.91	HA62	100LA4	6209
83.4	244	1.7	11.51	H052	112M6	7753

5.1 H/HA GEARED MOTORS (50Hz)

2.20 kW

n2 [rpm]	M2 [Nm]	fs	i	Gear reducer	Motor	Fr2 [N]
82.6	244	3.4	17.67	H062	112MR4	12000
82.3	248	1.9	11.67	HA62	112M6	6251
82.1	248	2.8	11.69	H062	112M6	12000
81.1	249	1.8	18.00	H052	112MR4	7810
80.8	252	1.6	11.51	H052	112MA6	7799
80.4	251	3.3	17.67	H062	100LA4	12000
79.7	256	1.8	11.67	HA62	112MA6	6317
79.6	256	2.7	11.69	H062	112MA6	12000
79.1	246	1.4	36.17	HA62	90L2	6334
78.9	256	1.8	18.00	H052	100LA4	7850
77.3	252	2.4	36.99	H062	90L2	12000
75.8	269	2.7	12.67	H062	112M6	12000
73.4	265	1.4	38.98	H052	90L2	8000
73.4	277	2.6	12.67	H062	112MA6	12000
73.1	276	1.7	19.97	H052	112MR4	7958
72.0	280	3.0	20.28	H062	112MR4	12000
71.4	283	1.6	20.46	HA62	112MR4	6555
71.1	284	1.6	19.97	H052	100LA4	7997
70.9	274	2.3	40.33	H062	90L2	12000
70.0	288	3.0	20.28	H062	100LA4	12000
69.4	291	1.6	20.46	HA62	100LA4	6616
67.4	299	1.6	21.67	H052	112MR4	8000
67.4	302	1.5	14.24	H052	112M6	8000
65.5	308	1.5	21.67	H052	100LA4	8000
65.1	313	2.3	14.75	H062	112M6	12000
63.1	323	2.3	14.75	H062	112MA6	12000
63.0	309	1.2	45.36	H052	90L2	8000
62.7	322	2.6	23.27	H062	112MR4	12000
62.1	313	2.0	46.06	H062	90L2	12000
61.0	331	2.6	23.27	H062	100LA4	12000
59.4	328	3.7	48.13	H082	90L2	18000
58.9	346	2.4	16.29	H062	112M6	12000
57.8	330	1.9	49.45	H063	90L2	12000
57.1	357	2.4	16.29	H062	112MA6	12000
56.8	355	2.4	25.70	H062	112MR4	12000
56.8	359	1.5	16.91	HA62	112M6	7074
55.3	365	2.3	25.70	H062	100LA4	12000
54.3	375	2.3	17.67	H062	112M6	12000
52.6	387	2.3	17.67	H062	112MA6	12000
52.4	364	1.8	54.61	H063	90L2	12000
50.6	377	3.2	56.53	H083	90L2	18000
50.2	406	3.9	18.53	H082	112MA6	18000
49.8	405	2.0	29.33	H062	112MR4	12000
48.4	417	1.9	29.33	H062	100LA4	12000
48.0	425	4.0	19.38	H082	112MA6	18000

5.1 H/HA GEARED MOTORS (50Hz)

2.20 kW

n2 [rpm]	M2 [Nm]	fs	i	Gear reducer	Motor	Fr2 [N]
47.3	430	2.1	20.28	H062	112M6	12000
46.9	430	3.7	31.15	H082	112MR4	18000
45.9	444	2.0	20.28	H062	112MA6	12000
45.6	442	1.9	32.00	H062	112MR4	12000
45.6	443	3.6	31.15	H082	100LA4	18000
44.9	454	3.7	21.39	H082	112M6	18000
44.4	455	1.9	32.00	H062	100LA4	12000
43.5	469	3.6	21.39	H082	112MA6	18000
42.5	475	3.4	34.38	H082	112MR4	18000
42.1	453	1.4	68.00	H063	90L2	12000
42.1	484	3.5	22.80	H082	112M6	18000
41.3	494	1.8	23.27	H062	112M6	12000
41.3	488	3.3	34.38	H082	100LA4	18000
40.8	499	3.4	22.80	H082	112MA6	18000
40.0	510	1.8	23.27	H062	112MA6	12000
40.0	476	2.8	71.48	H083	90L2	18000
39.5	511	1.6	36.99	H062	112MR4	12000
38.4	525	1.5	36.99	H062	100LA4	12000
37.7	535	3.0	38.70	H082	112MR4	18000
37.4	545	1.6	25.70	H062	112M6	12000
36.7	550	2.9	38.70	H082	100LA4	18000
36.3	526	2.6	78.87	H083	90L2	18000
36.2	563	1.6	25.70	H062	112MA6	12000
36.2	557	1.5	40.33	H062	112MR4	12000
36.1	564	3.0	26.60	H082	112M6	18000
35.2	573	1.5	40.33	H062	100LA4	12000
35.0	583	2.9	26.60	H082	112MA6	18000
34.4	592	2.8	27.88	H082	112M6	18000
34.2	591	2.7	42.75	H082	112MR4	18000
33.4	611	2.8	27.88	H082	112MA6	18000
33.4	570	2.4	85.56	H083	90L2	18000
33.3	572	1.1	85.82	H063	90L2	12000
33.2	607	2.6	42.75	H082	100LA4	18000
31.7	636	1.3	46.06	H062	112MR4	12000
30.8	654	1.3	46.06	H062	100LA4	12000
30.8	661	2.5	31.15	H082	112M6	18000
30.3	665	2.4	48.13	H082	112MR4	18000
30.0	679	1.3	32.00	H062	112M6	12000
29.9	682	2.5	31.15	H082	112MA6	18000
29.5	669	1.3	49.45	H063	112MR4	12000
29.5	684	2.3	48.13	H082	100LA4	18000
29.2	654	2.1	98.09	H083	90L2	18000
29.1	701	1.3	32.00	H062	112MA6	12000
28.7	688	1.2	49.45	H063	100LA4	12000
27.9	729	2.3	34.38	H082	112M6	18000

5.1 H/HA GEARED MOTORS (50Hz)

2.20 kW

n2 [rpm]	M2 [Nm]	fs	i	Gear reducer	Motor	Fr2 [N]
27.1	753	2.2	34.38	H082	112MA6	18000
25.8	765	2.1	56.53	H083	112MR4	18000
25.4	752	1.8	112.78	H083	90L2	18000
25.1	786	2.0	56.53	H083	100LA4	18000
25.0	816	3.6	38.45	H102	112M6	22000
24.8	821	2.0	38.70	H082	112M6	18000
24.2	842	3.5	38.45	H102	112MA6	22000
24.0	848	2.0	38.70	H082	112MA6	18000
23.2	876	4.0	41.30	H102	112M6	22000
23.0	829	1.6	124.44	H083	90L2	18000
22.5	907	1.9	42.75	H082	112M6	18000
22.5	905	3.8	41.30	H102	112MA6	22000
21.8	936	1.8	42.75	H082	112MA6	18000
21.0	972	3.6	45.82	H102	112M6	22000
21.0	943	3.7	69.69	H103	112MR4	22000
20.4	967	1.9	71.48	H083	112MR4	18000
20.4	969	3.6	69.69	H103	100LA4	22000
20.3	1004	3.5	45.82	H102	112MA6	22000
20.1	947	1.4	142.15	H083	90L2	18000
19.9	1021	1.6	48.13	H082	112M6	18000
19.9	994	1.8	71.48	H083	100LA4	18000
19.3	1054	1.6	48.13	H082	112MA6	18000
18.6	1093	3.2	51.52	H102	112M6	22000
18.5	1067	1.7	78.87	H083	112MR4	18000
18.5	1031	1.3	154.76	H083	90L2	18000
18.3	1080	3.2	79.82	H103	112MR4	22000
18.1	1128	3.1	51.52	H102	112MA6	22000
18.0	1097	1.6	78.87	H083	100LA4	18000
17.8	1110	3.2	79.82	H103	100LA4	22000
17.6	1082	1.2	162.35	H083	90L2	18000
17.3	1138	3.1	84.16	H103	112MR4	22000
17.1	1157	1.6	85.56	H083	112MR4	18000
17.0	1174	1.4	56.53	H083	112M6	18000
16.9	1170	3.0	84.16	H103	100LA4	22000
16.6	1190	1.5	85.56	H083	100LA4	18000
16.5	1212	1.4	56.53	H083	112MA6	18000
16.0	1194	1.1	179.13	H083	90L2	18000
15.8	1251	4.0	89.97	H123	100LA4	30000
15.6	1263	2.8	93.36	H103	112MR4	22000
15.2	1299	2.7	93.36	H103	100LA4	22000
14.9	1327	1.4	98.09	H083	112MR4	18000
14.6	1354	2.6	100.07	H103	112MR4	22000
14.6	1357	3.7	100.29	H123	112MR4	30000
14.5	1364	1.3	98.09	H083	100LA4	18000
14.3	1399	3.8	67.32	H123	112M6	30000

5.1 H/HA GEARED MOTORS (50Hz)

2.20 kW

n2 [rpm]	M2 [Nm]	fs	i	Gear reducer	Motor	Fr2 [N]
14.2	1392	2.5	100.07	H103	100LA4	22000
14.2	1395	3.6	100.29	H123	100LA4	30000
13.8	1448	2.5	69.69	H103	112M6	22000
13.8	1444	3.6	67.32	H123	112MA6	30000
13.5	1466	3.4	108.34	H123	112MR4	30000
13.4	1485	1.3	71.48	H083	112M6	18000
13.3	1495	2.5	69.69	H103	112MA6	22000
13.1	1507	3.3	108.34	H123	100LA4	30000
13.0	1533	1.2	71.48	H083	112MA6	18000
13.0	1532	3.4	73.71	H123	112M6	30000
12.9	1526	1.2	112.78	H083	112MR4	18000
12.6	1581	3.3	73.71	H123	112MA6	30000
12.3	1605	3.1	118.62	H123	112MR4	30000
12.1	1635	2.1	120.84	H103	112MR4	22000
12.0	1658	2.2	79.82	H103	112M6	22000
12.0	1650	3.0	118.62	H123	100LA4	30000
11.8	1681	2.1	120.84	H103	100LA4	22000
11.7	1712	2.1	79.82	H103	112MA6	22000
11.5	1732	3.0	83.34	H123	112M6	30000
11.4	1749	2.1	84.16	H103	112M6	22000
11.4	1734	2.9	128.18	H123	112MR4	30000
11.2	1787	2.9	83.34	H123	112MA6	30000
11.1	1805	2.0	84.16	H103	112MA6	22000
11.1	1783	2.8	128.18	H123	100LA4	30000
10.9	1813	1.9	134.06	H103	112MR4	22000
10.7	1869	2.8	89.97	H123	112M6	30000
10.6	1865	1.9	134.06	H103	100LA4	22000
10.3	1940	1.9	93.36	H103	112M6	22000
10.3	1930	2.7	89.97	H123	112MA6	30000
10.2	1940	1.8	143.42	H103	112MR4	22000
10.1	1959	2.6	144.79	H123	112MR4	30000
10.0	2002	1.8	93.36	H103	112MA6	22000
9.9	1995	1.8	143.42	H103	100LA4	22000
9.8	2014	2.5	144.79	H123	100LA4	30000
9.6	2079	1.8	100.07	H103	112M6	22000
9.6	2084	2.5	100.29	H123	112M6	30000
9.4	2100	2.4	155.22	H123	112MR4	30000
9.3	2146	1.7	100.07	H103	112MA6	22000
9.3	2151	2.4	100.29	H123	112MA6	30000
9.1	2175	1.6	160.82	H103	112MR4	22000
9.1	2159	2.3	155.22	H123	100LA4	30000
8.9	2251	2.3	108.34	H123	112M6	30000
8.8	2237	1.6	160.82	H103	100LA4	22000
8.6	2324	2.3	108.34	H123	112MA6	30000
8.4	2337	2.1	172.80	H123	112MR4	30000

5.1 H/HA GEARED MOTORS (50Hz)

2.20 kW

n2 [rpm]	M2 [Nm]	fs	i	Gear reducer	Motor	Fr2 [N]
8.2	2403	2.1	172.80	H123	100LA4	30000
8.1	2449	1.4	181.07	H103	112MR4	22000
8.1	2465	2.1	118.62	H123	112M6	30000
7.9	2511	1.5	120.84	H103	112M6	22000
7.8	2518	1.4	181.07	H103	100LA4	22000
7.8	2544	2.1	118.62	H123	112MA6	30000
7.7	2592	1.4	120.84	H103	112MA6	22000
7.7	2559	2.0	189.19	H123	112MR4	30000
7.5	2627	1.3	194.21	H103	112MR4	22000
7.5	2663	2.0	128.18	H123	112M6	30000
7.5	2631	1.9	189.19	H123	100LA4	30000
7.3	2701	1.3	194.21	H103	100LA4	22000
7.3	2749	1.9	128.18	H123	112MA6	30000
7.2	2786	1.3	134.06	H103	112M6	22000
7.0	2806	1.8	207.43	H123	112MR4	30000
6.9	2875	1.3	134.06	H103	112MA6	22000
6.8	2914	1.2	215.45	H103	112MR4	22000
6.8	2885	1.7	207.43	H123	100LA4	30000
6.7	2980	1.2	143.42	H103	112M6	22000
6.6	2976	1.2	215.45	H103	100LA4	22000
6.6	3008	1.7	144.79	H123	112M6	30000
6.4	3105	1.7	144.79	H123	112MA6	30000
6.3	3124	1.6	230.92	H123	112MR4	30000
6.2	3225	1.6	155.22	H123	112M6	30000
6.1	3212	1.6	230.92	H123	100LA4	30000
6.0	3329	1.6	155.22	H123	112MA6	30000
5.6	3590	1.5	172.80	H123	112M6	30000
5.6	3512	1.4	259.64	H123	112MR4	30000
5.5	3611	1.4	259.64	H123	100LA4	30000
5.4	3706	1.4	172.80	H123	112MA6	30000
5.1	3931	1.3	189.19	H123	112M6	30000
4.9	4058	1.3	189.19	H123	112MA6	30000

3.00 kW

n2 [rpm]	M2 [Nm]	fs	i	Gear reducer	Motor	Fr2 [N]
2278.6	12	2.5	1.27	H051	100L2	1259
2255.0	12	2.5	1.27	H051	100LA2	1263
1364.7	20	2.3	2.13	H051	100L2	1466
1350.6	20	2.3	2.13	H051	100LA2	1470
1160.0	23	2.9	2.50	HA61	100L2	1986
1148.0	23	2.9	2.50	HA61	100LA2	1993
1139.3	24	1.6	1.27	H051	112MS4	1540
1127.8	24	2.2	2.57	H051	100L2	1549

5.1 H/HA GEARED MOTORS (50Hz)

3.00 kW

n2 [rpm]	M2 [Nm]	fs	i	Gear reducer	Motor	Fr2 [N]
1127.8	24	3.8	2.57	H061	100L2	2467
1123.6	25	1.6	1.27	H051	100LB4	1547
1116.1	24	2.2	2.57	H051	100LA2	1553
1116.1	24	3.7	2.57	H061	100LA2	2474
1087.5	26	3.5	1.33	HA61	112MS4	2029
1079.1	26	3.1	1.34	H061	112MS4	2494
1072.5	26	3.5	1.33	HA61	100LB4	2038
1064.2	26	3.1	1.34	H061	100LB4	2504
1021.6	27	2.2	1.42	H051	112MS4	1589
1007.5	28	2.2	1.42	H051	100LB4	1595
915.8	29	2.0	3.17	H051	100L2	1642
906.3	30	2.0	3.17	H051	100LA2	1647
786.4	34	2.0	3.69	H051	100L2	1713
786.4	34	3.3	3.69	H061	100L2	2737
778.3	34	2.0	3.69	H051	100LA2	1717
778.3	34	3.3	3.69	H061	100LA2	2745
725.0	37	1.8	4.00	H051	100L2	1751
725.0	37	3.0	4.00	H061	100L2	2800
717.5	37	1.8	4.00	H051	100LA2	1756
717.5	37	3.0	4.00	H061	100LA2	2808
697.5	40	2.3	1.33	HA61	112MB6	2353
692.1	41	2.1	1.34	H061	112MB6	2827
682.4	41	1.5	2.13	H051	112MS4	1773
682.4	41	2.9	2.13	H061	112MS4	2840
668.2	42	1.4	2.13	H051	100LB4	1783
668.2	42	2.9	2.13	H061	100LB4	2856
661.4	41	2.0	4.38	HA61	100L2	2395
655.2	43	1.5	1.42	H051	112MB6	1790
654.6	41	2.0	4.38	HA61	100LA2	2403
608.1	44	1.6	4.77	H051	100L2	1834
608.1	44	2.7	4.77	H061	100L2	2940
601.8	45	1.6	4.77	H051	100LA2	1839
601.8	45	2.7	4.77	H061	100LA2	2948
580.0	48	1.9	2.50	HA61	112MS4	2502
572.0	49	1.9	2.50	HA61	100LB4	2514
563.9	49	1.4	2.57	H051	112MS4	1863
563.9	49	2.4	2.57	H061	112MS4	2991
556.1	50	1.4	2.57	H051	100LB4	1869
556.1	50	2.4	2.57	H061	100LB4	3002
552.4	49	1.5	5.25	H051	100L2	1880
546.7	49	1.5	5.25	H051	100LA2	1885
498.4	54	1.4	5.82	H051	100L2	1929
498.4	54	2.4	5.82	H061	100L2	3101
493.3	54	1.4	5.82	H051	100LA2	1934
493.3	54	2.3	5.82	H061	100LA2	3110

5.1 H/HA GEARED MOTORS (50Hz)

3.00 kW

n2 [rpm]	M2 [Nm]	fs	i	Gear reducer	Motor	Fr2 [N]
457.9	61	1.3	3.17	H051	112MS4	1961
457.9	61	2.1	3.17	H061	112MS4	3159
451.6	62	1.3	3.17	H051	100LB4	1967
451.6	62	2.1	3.17	H061	100LB4	3170
437.6	64	2.0	2.13	H061	112MB6	3192
395.5	68	1.9	7.33	H061	100L2	3292
393.2	71	1.3	3.69	H051	112MS4	2032
393.2	71	2.1	3.69	H061	112MS4	3283
391.4	69	1.9	7.33	H061	100LA2	3301
387.8	72	1.3	3.69	H051	100LB4	2038
387.8	72	2.1	3.69	H061	100LB4	3294
381.6	74	4.0	2.54	H081	132S6	4000
377.7	74	4.0	2.54	H081	132SA6	4000
372.0	75	1.3	2.50	HA61	112MB6	2901
365.9	77	3.8	2.54	H081	112MB6	4000
362.5	77	1.2	4.00	H051	112MS4	2070
362.5	77	2.0	4.00	H061	112MS4	3349
361.7	78	1.6	2.57	H061	112MB6	3346
357.5	78	1.9	4.00	H061	100LB4	3360
330.7	84	1.3	4.38	HA61	112MS4	3017
327.1	81	1.2	8.87	H032	100L2	3044
323.9	86	1.3	4.38	HA61	100LB4	3038
323.7	82	1.2	8.87	H032	100LA2	3049
310.7	89	3.6	4.67	H081	112MS4	4000
306.4	91	3.5	4.67	H081	100LB4	4000
304.0	91	1.8	4.77	H061	112MS4	3491
299.8	93	1.7	4.77	H061	100LB4	3502
298.5	94	3.5	3.25	H081	132S6	4000
295.4	95	3.4	3.25	H081	132SA6	4000
293.7	96	1.4	3.17	H061	112MB6	3514
286.2	98	3.3	3.25	H081	112MB6	4000
285.9	93	1.1	10.14	H032	100L2	3099
282.9	94	1.1	10.14	H032	100LA2	3103
281.9	98	2.5	5.14	HA52	112MS4	2809
281.9	98	3.9	5.14	HA62	112MS4	4146
276.2	101	1.7	5.25	H061	112MS4	3568
276.1	100	2.4	5.14	HA52	100LB4	2829
276.1	100	3.8	5.14	HA62	100LB4	4175
270.5	103	1.7	5.25	H061	100LB4	3585
265.4	104	1.5	5.46	H042	112MS4	4319
261.8	106	3.1	5.54	H081	112MS4	4000
260.6	108	3.0	3.72	H081	132S6	4000
260.0	106	1.5	5.46	H042	100LB4	4337
258.2	108	3.1	5.54	H081	100LB4	4000
257.9	109	3.0	3.72	H081	132SA6	4000

5.1 H/HA GEARED MOTORS (50Hz)

3.00 kW

n2 [rpm]	M2 [Nm]	fs	i	Gear reducer	Motor	Fr2 [N]
253.2	109	2.4	5.73	H052	112MS4	5779
252.2	111	1.4	3.69	H061	112MB6	3634
249.9	112	2.9	3.72	H081	112MB6	4000
249.2	112	1.5	5.82	H061	112MS4	3649
248.6	107	2.0	11.67	HA52	100L2	2930
248.6	107	3.1	11.67	HA62	100L2	4324
247.9	111	2.3	5.73	H052	100LB4	5809
246.0	108	1.9	11.67	HA52	100LA2	2940
246.0	108	3.1	11.67	HA62	100LA2	4339
244.1	114	1.5	5.82	H061	100LB4	3665
242.5	116	2.9	4.00	H081	132S6	4000
240.0	117	2.9	4.00	H081	132SA6	4000
238.4	117	2.9	6.08	H081	112MS4	4000
233.4	119	2.9	6.08	H081	100LB4	4000
233.0	118	2.0	6.22	HA52	112MS4	2993
233.0	118	3.2	6.22	HA62	112MS4	4418
232.5	121	1.3	4.00	H061	112MB6	3696
232.5	121	2.8	4.00	H081	112MB6	4000
228.2	121	2.0	6.22	HA52	100LB4	3014
228.2	121	3.2	6.22	HA62	100LB4	4449
213.7	124	1.5	13.57	H042	100L2	4533
211.5	126	1.5	13.57	H042	100LA2	4541
210.3	131	2.2	6.89	H052	112MS4	6042
207.9	135	2.5	4.67	H081	132S6	4000
206.0	134	2.2	6.89	H052	100LB4	6071
205.7	136	2.5	4.67	H081	132SA6	4000
200.0	133	1.6	14.50	HA52	100L2	3150
200.0	133	2.4	14.50	HA62	100L2	4649
199.3	141	2.4	4.67	H081	112MB6	4000
197.9	134	1.6	14.50	HA52	100LA2	3161
197.9	134	2.3	14.50	HA62	100LA2	4665
197.7	141	1.2	7.33	H061	112MS4	3700
196.2	140	3.9	7.39	H062	112MS4	10970
193.6	144	1.2	7.33	H061	100LB4	3700
193.3	144	2.4	7.50	H081	112MS4	4000
192.1	143	3.8	7.39	H062	100LB4	11035
189.3	147	2.4	7.50	H081	100LB4	4000
187.5	147	1.6	7.73	HA52	112MS4	3218
187.5	147	2.6	7.73	HA62	112MS4	4750
183.6	150	1.6	7.73	HA52	100LB4	3241
183.6	150	2.5	7.73	HA62	100LB4	4783
181.7	146	1.3	15.96	H042	100L2	4657
180.8	154	1.6	5.14	HA52	112MB6	3257
180.8	154	2.6	5.14	HA62	112MB6	4808
180.5	154	3.4	5.38	H062	132S6	11220

5.1 H/HA GEARED MOTORS (50Hz)

3.00 kW

n2 [rpm]	M2 [Nm]	fs	i	Gear reducer	Motor	Fr2 [N]
179.8	148	1.3	15.96	H042	100LA2	4665
178.6	156	3.4	5.38	H062	132SA6	11252
175.1	160	2.2	5.54	H081	132S6	4000
173.3	162	2.1	5.54	H081	132SA6	4000
173.0	161	3.3	5.38	H062	112MB6	11351
171.7	162	2.2	8.44	H081	112MS4	4000
171.5	155	1.5	16.91	HA52	100L2	3316
171.5	155	2.4	16.91	HA62	100L2	4894
170.6	161	3.7	8.50	H062	112MS4	11404
170.0	162	2.1	8.53	H052	112MS4	6338
169.7	156	1.4	16.91	HA52	100LA2	3327
169.7	156	2.4	16.91	HA62	100LA2	4911
169.0	164	4.0	8.40	H101	100LB4	5000
168.2	165	2.1	8.44	H081	100LB4	4000
167.9	167	2.1	5.54	H081	112MB6	4000
167.1	165	3.6	8.50	H062	100LB4	11470
166.5	165	2.1	8.53	H052	100LB4	6366
163.4	170	3.4	5.93	H062	132S6	11529
162.4	171	1.6	5.73	H052	112MB6	6389
161.8	172	3.4	5.93	H062	132SA6	11562
159.5	176	2.0	6.08	H081	132S6	4000
157.8	178	2.0	6.08	H081	132SA6	4000
156.7	177	3.3	5.93	H062	112MB6	11662
155.7	180	3.7	6.23	H101	132S6	5000
154.5	178	3.4	9.39	H062	112MS4	11717
154.1	182	3.7	6.23	H101	132SA6	5000
152.9	184	1.9	6.08	H081	112MB6	4000
151.6	181	2.0	9.56	H052	112MS4	6492
151.3	182	3.3	9.39	H062	100LB4	11783
150.4	183	1.6	9.64	HA52	112MS4	3464
150.4	183	2.5	9.64	HA62	112MS4	5113
149.5	186	2.1	6.22	HA62	112MB6	5123
149.3	188	3.6	6.23	H101	112MB6	5000
148.5	185	2.0	9.56	H052	100LB4	6520
147.3	187	1.6	9.64	HA52	100LB4	3488
147.3	187	2.5	9.64	HA62	100LB4	5149
141.7	187	1.2	20.46	HA52	100L2	3533
141.7	187	1.8	20.46	HA62	100L2	5215
140.3	189	1.1	20.46	HA52	100LA2	3545
140.3	189	1.8	20.46	HA62	100LA2	5233
134.9	206	1.5	6.89	H052	112MB6	6632
131.2	212	2.7	7.39	H062	132S6	12000
131.2	212	4.0	7.39	H082	132S6	15375
129.9	214	2.7	7.39	H062	132SA6	12000
129.8	214	3.9	7.39	H082	132SA6	15421

5.1 H/HA GEARED MOTORS (50Hz)

3.00 kW

n2 [rpm]	M2 [Nm]	fs	i	Gear reducer	Motor	Fr2 [N]
129.3	217	1.7	7.50	H081	132S6	4000
128.6	218	3.1	7.55	H101	132S6	5000
128.0	219	1.7	7.50	H081	132SA6	4000
127.2	221	3.1	7.55	H101	132SA6	5000
126.0	218	1.8	11.51	H052	112MS4	6732
125.8	221	2.6	7.39	H062	112MB6	12000
124.3	221	2.0	11.67	HA62	112MS4	5448
124.1	222	2.9	11.69	H062	112MS4	12000
124.0	226	1.6	7.50	H081	112MB6	4000
123.4	223	1.7	11.51	H052	100LB4	6758
123.3	228	3.0	7.55	H101	112MB6	5000
121.7	226	1.9	11.67	HA62	100LB4	5486
121.5	226	2.9	11.69	H062	100LB4	12000
120.9	230	3.7	8.02	H082	132S6	15737
120.3	231	1.7	7.73	HA62	112MB6	5508
119.7	232	3.6	8.02	H082	132SA6	15784
115.5	243	2.8	8.40	H101	132S6	5000
114.9	244	1.5	8.44	H081	132S6	4000
114.5	240	2.9	12.67	H062	112MS4	12000
114.3	246	2.8	8.40	H101	132SA6	5000
114.1	243	2.6	8.50	H062	132S6	12000
114.0	233	1.4	25.43	HA62	100L2	5607
113.7	247	1.5	8.44	H081	132SA6	4000
112.9	246	2.6	8.50	H062	132SA6	12000
112.9	235	1.4	25.43	HA62	100LA2	5626
112.1	245	2.9	12.67	H062	100LB4	12000
110.7	254	2.7	8.40	H101	112MB6	5000
110.1	255	1.4	8.44	H081	112MB6	4000
109.6	253	3.7	8.85	H082	132S6	16183
109.4	254	2.5	8.50	H062	112MB6	12000
108.5	256	3.7	8.85	H082	132SA6	16230
103.4	269	2.3	9.39	H062	132S6	12000
102.3	272	2.3	9.39	H062	132SA6	12000
102.0	260	1.4	28.44	H052	100L2	7043
101.8	270	1.6	14.24	H052	112MS4	6982
100.9	263	1.4	28.44	H052	100LA2	7055
100.0	275	1.5	14.50	HA62	112MS4	5858
99.7	276	1.6	14.24	H052	100LB4	7004
99.1	280	2.2	9.39	H062	112MB6	12000
98.3	280	2.5	14.75	H062	112MS4	12000
97.9	281	1.5	14.50	HA62	100LB4	5898
96.4	288	1.7	9.64	HA62	112MB6	5929
96.3	286	2.5	14.75	H062	100LB4	12000
92.0	288	1.3	31.52	H052	100L2	7158
91.1	291	1.3	31.52	H052	100LA2	7169

5.1 H/HA GEARED MOTORS (50Hz)

3.00 kW

n2 [rpm]	M2 [Nm]	fs	i	Gear reducer	Motor	Fr2 [N]
89.0	309	2.6	16.29	H062	112MS4	12000
88.1	315	3.7	11.01	H082	132S6	17194
87.4	315	1.4	16.59	H052	112MS4	7138
87.2	315	2.5	16.29	H062	100LB4	12000
87.2	319	3.6	11.01	H082	132SA6	17243
85.7	321	1.6	16.91	HA62	112MS4	6166
85.6	321	1.4	16.59	H052	100LB4	7158
84.0	328	1.5	16.91	HA62	100LB4	6209
83.0	335	2.0	11.69	H062	132S6	12000
82.1	338	2.0	11.69	H062	132SA6	12000
82.1	335	2.5	17.67	H062	112MS4	12000
80.4	342	2.4	17.67	H062	100LB4	12000
79.6	349	2.0	11.69	H062	112MB6	12000
78.4	339	1.8	36.99	H062	100L2	12000
77.6	342	1.8	36.99	H062	100LA2	12000
76.6	363	2.0	12.67	H062	132S6	12000
75.8	367	2.0	12.67	H062	132SA6	12000
73.4	378	1.9	12.67	H062	112MB6	12000
71.9	369	1.7	40.33	H062	100L2	12000
71.9	387	3.8	13.50	H082	132S6	18000
71.5	385	2.2	20.28	H062	112MS4	12000
71.2	373	1.7	40.33	H062	100LA2	12000
71.1	391	3.8	13.50	H082	132SA6	18000
70.0	393	2.2	20.28	H062	100LB4	12000
68.9	403	3.6	13.50	H082	112MB6	18000
67.8	406	3.9	21.39	H082	112MS4	18000
67.8	391	3.1	42.75	H082	100L2	18000
67.1	395	3.0	42.75	H082	100LA2	18000
66.4	414	3.9	21.39	H082	100LB4	18000
65.8	422	1.7	14.75	H062	132S6	12000
65.1	427	1.7	14.75	H062	132SA6	12000
65.1	427	3.7	14.90	H082	132S6	18000
64.4	431	3.7	14.90	H082	132SA6	18000
63.6	432	3.7	22.80	H082	112MS4	18000
63.1	441	1.7	14.75	H062	112MB6	12000
63.0	422	1.5	46.06	H062	100L2	12000
62.4	445	3.5	14.90	H082	112MB6	18000
62.3	441	1.9	23.27	H062	112MS4	12000
62.3	426	1.5	46.06	H062	100LA2	12000
62.3	442	3.6	22.80	H082	100LB4	18000
61.0	451	1.9	23.27	H062	100LB4	12000
60.2	441	2.7	48.13	H082	100L2	18000
59.6	466	1.8	16.29	H062	132S6	12000
59.6	445	2.7	48.13	H082	100LA2	18000
58.9	471	1.8	16.29	H062	132SA6	12000

5.1 H/HA GEARED MOTORS (50Hz)

3.00 kW

n2 [rpm]	M2 [Nm]	fs	i	Gear reducer	Motor	Fr2 [N]
58.6	443	1.4	49.45	H063	100L2	12000
58.4	476	3.3	16.62	H082	132S6	18000
58.0	448	1.4	49.45	H063	100LA2	12000
57.8	481	3.3	16.62	H082	132SA6	18000
57.1	486	1.7	16.29	H062	112MB6	12000
56.4	487	1.7	25.70	H062	112MS4	12000
56.0	496	3.2	16.62	H082	112MB6	18000
55.3	498	1.7	25.70	H062	100LB4	12000
54.9	506	1.7	17.67	H062	132S6	12000
54.5	505	3.2	26.60	H082	112MS4	18000
54.3	511	1.7	17.67	H062	132SA6	12000
53.4	515	3.1	26.60	H082	100LB4	18000
53.1	489	1.3	54.61	H063	100L2	12000
52.6	528	1.7	17.67	H062	112MB6	12000
52.6	494	1.3	54.61	H063	100LA2	12000
52.4	531	3.0	18.53	H082	132S6	18000
52.0	529	3.0	27.88	H082	112MS4	18000
51.8	536	2.9	18.53	H082	132SA6	18000
51.3	507	2.4	56.53	H083	100L2	18000
50.9	540	3.0	27.88	H082	100LB4	18000
50.8	512	2.3	56.53	H083	100LA2	18000
50.2	553	2.8	18.53	H082	112MB6	18000
50.0	555	3.0	19.38	H082	132S6	18000
49.5	561	3.0	19.38	H082	132SA6	18000
49.4	556	1.4	29.33	H062	112MS4	12000
48.4	568	1.4	29.33	H062	100LB4	12000
48.0	579	2.9	19.38	H082	112MB6	18000
47.8	581	1.5	20.28	H062	132S6	12000
47.3	587	1.5	20.28	H062	132SA6	12000
46.5	591	2.7	31.15	H082	112MS4	18000
45.9	606	1.5	20.28	H062	112MB6	12000
45.6	603	2.7	31.15	H082	100LB4	18000
45.4	613	2.7	21.39	H082	132S6	18000
45.3	607	1.4	32.00	H062	112MS4	12000
44.9	619	2.7	21.39	H082	132SA6	18000
44.4	620	1.4	32.00	H062	100LB4	12000
43.5	639	2.6	21.39	H082	112MB6	18000
42.5	653	2.6	22.80	H082	132S6	18000
42.2	652	2.5	34.38	H082	112MS4	18000
42.1	660	2.5	22.80	H082	132SA6	18000
41.3	666	2.4	34.38	H082	100LB4	18000
40.8	681	2.5	22.80	H082	112MB6	18000
40.6	641	2.1	71.48	H083	100L2	18000
40.2	647	2.1	71.48	H083	100LA2	18000
37.7	729	3.8	38.45	H102	112MS4	22000

5.1 H/HA GEARED MOTORS (50Hz)

3.00 kW

n2 [rpm]	M2 [Nm]	fs	i	Gear reducer	Motor	Fr2 [N]
37.5	734	2.2	38.70	H082	112MS4	18000
36.9	745	3.8	38.45	H102	100LB4	22000
36.7	750	2.1	38.70	H082	100LB4	18000
36.5	762	2.2	26.60	H082	132S6	18000
36.1	770	2.2	26.60	H082	132SA6	18000
35.0	795	2.1	26.60	H082	112MB6	18000
34.8	798	2.1	27.88	H082	132S6	18000
34.4	807	2.1	27.88	H082	132SA6	18000
33.9	811	2.0	42.75	H082	112MS4	18000
33.9	767	1.8	85.56	H083	100L2	18000
33.5	775	1.7	85.56	H083	100LA2	18000
33.4	833	2.0	27.88	H082	112MB6	18000
33.2	828	1.9	42.75	H082	100LB4	18000
31.6	869	3.8	45.82	H102	112MS4	22000
31.6	880	3.8	30.72	H102	132S6	22000
31.2	889	3.8	30.72	H102	132SA6	22000
31.1	892	1.9	31.15	H082	132S6	18000
31.0	887	3.7	45.82	H102	100LB4	22000
30.8	901	1.9	31.15	H082	132SA6	18000
30.3	918	3.7	30.72	H102	112MB6	22000
30.1	913	1.8	48.13	H082	112MS4	18000
29.9	931	1.8	31.15	H082	112MB6	18000
29.6	879	1.5	98.09	H083	100L2	18000
29.5	932	1.7	48.13	H082	100LB4	18000
29.3	888	1.5	98.09	H083	100LA2	18000
28.4	979	3.4	34.20	H102	132S6	22000
28.2	984	1.7	34.38	H082	132S6	18000
28.1	990	3.4	34.20	H102	132SA6	22000
28.1	977	3.4	51.52	H102	112MS4	22000
27.9	995	1.7	34.38	H082	132SA6	18000
27.6	998	3.3	51.52	H102	100LB4	22000
27.2	1022	3.3	34.20	H102	112MB6	22000
27.1	1027	1.6	34.38	H082	112MB6	18000
25.7	1050	1.5	56.53	H083	112MS4	18000
25.7	1011	1.3	112.78	H083	100L2	18000
25.4	1021	1.3	112.78	H083	100LA2	18000
25.2	1101	2.7	38.45	H102	132S6	22000
25.1	1108	1.5	38.70	H082	132S6	18000
25.1	1072	1.5	56.53	H083	100LB4	18000
25.0	1113	2.6	38.45	H102	132SA6	22000
24.8	1120	1.5	38.70	H082	132SA6	18000
24.2	1149	2.6	38.45	H102	112MB6	22000
24.0	1156	1.5	38.70	H082	112MB6	18000
23.5	1183	2.9	41.30	H102	132S6	22000
23.3	1115	1.2	124.44	H083	100L2	18000

5.1 H/HA GEARED MOTORS (50Hz)

3.00 kW

n2 [rpm]	M2 [Nm]	fs	i	Gear reducer	Motor	Fr2 [N]
23.2	1195	2.9	41.30	H102	132SA6	22000
23.1	1127	1.2	124.44	H083	100LA2	18000
22.7	1224	1.4	42.75	H082	132S6	18000
22.5	1237	1.4	42.75	H082	132SA6	18000
22.5	1234	2.8	41.30	H102	112MB6	22000
21.8	1277	1.3	42.75	H082	112MB6	18000
21.5	1250	4.0	67.32	H123	112MS4	30000
21.2	1312	2.6	45.82	H102	132S6	22000
21.1	1277	3.9	67.32	H123	100LB4	30000
21.0	1326	2.6	45.82	H102	132SA6	22000
20.8	1294	2.7	69.69	H103	112MS4	22000
20.4	1322	2.6	69.69	H103	100LB4	22000
20.3	1328	1.4	71.48	H083	112MS4	18000
20.3	1369	2.5	45.82	H102	112MB6	22000
19.9	1356	1.3	71.48	H083	100LB4	18000
19.7	1369	3.7	73.71	H123	112MS4	30000
19.3	1398	3.6	73.71	H123	100LB4	30000
18.8	1475	2.3	51.52	H102	132S6	22000
18.6	1491	2.3	51.52	H102	132SA6	22000
18.4	1465	1.2	78.87	H083	112MS4	18000
18.2	1482	2.4	79.82	H103	112MS4	22000
18.1	1539	2.3	51.52	H102	112MB6	22000
18.0	1496	1.2	78.87	H083	100LB4	18000
17.8	1514	2.3	79.82	H103	100LB4	22000
17.5	1556	2.4	55.47	H103	132S6	22000
17.4	1567	3.4	55.87	H123	132S6	30000
17.4	1548	3.2	83.34	H123	112MS4	30000
17.3	1572	2.3	55.47	H103	132SA6	22000
17.2	1563	2.2	84.16	H103	112MS4	22000
17.2	1583	3.3	55.87	H123	132SA6	30000
17.0	1580	3.2	83.34	H123	100LB4	30000
16.9	1596	2.2	84.16	H103	100LB4	22000
16.1	1671	3.0	89.97	H123	112MS4	30000
15.8	1706	2.9	89.97	H123	100LB4	30000
15.5	1734	2.0	93.36	H103	112MS4	22000
15.2	1771	2.0	93.36	H103	100LB4	22000
14.5	1859	1.9	100.07	H103	112MS4	22000
14.5	1863	2.7	100.29	H123	112MS4	30000
14.4	1888	2.8	67.32	H123	132S6	30000
14.3	1908	2.8	67.32	H123	132SA6	30000
14.2	1898	1.8	100.07	H103	100LB4	22000
14.2	1902	2.6	100.29	H123	100LB4	30000
13.9	1954	1.9	69.69	H103	132S6	22000
13.8	1975	1.9	69.69	H103	132SA6	22000
13.8	1969	2.7	67.32	H123	112MB6	30000

5.1 H/HA GEARED MOTORS (50Hz)

3.00 kW

n2 [rpm]	M2 [Nm]	fs	i	Gear reducer	Motor	Fr2 [N]
13.4	2012	2.5	108.34	H123	112MS4	30000
13.3	2038	1.8	69.69	H103	112MB6	22000
13.2	2067	2.5	73.71	H123	132S6	30000
13.1	2055	2.4	108.34	H123	100LB4	30000
13.0	2089	2.5	73.71	H123	132SA6	30000
12.6	2156	2.4	73.71	H123	112MB6	30000
12.3	2217	3.8	79.07	H143	132S6	55000
12.2	2238	1.6	79.82	H103	132S6	22000
12.2	2203	2.3	118.62	H123	112MS4	30000
12.1	2240	3.7	79.07	H143	132SA6	55000
12.0	2261	1.6	79.82	H103	132SA6	22000
12.0	2244	1.6	120.84	H103	112MS4	22000
12.0	2250	2.2	118.62	H123	100LB4	30000
11.8	2292	1.5	120.84	H103	100LB4	22000
11.7	2334	1.6	79.82	H103	112MB6	22000
11.6	2337	2.2	83.34	H123	132S6	30000
11.5	2360	1.6	84.16	H103	132S6	22000
11.5	2361	2.2	83.34	H123	132SA6	30000
11.4	2384	1.5	84.16	H103	132SA6	22000
11.3	2381	2.1	128.18	H123	112MS4	30000
11.2	2437	2.2	83.34	H123	112MB6	30000
11.2	2424	3.5	86.43	H143	132S6	55000
11.1	2461	1.5	84.16	H103	112MB6	22000
11.1	2431	2.1	128.18	H123	100LB4	30000
11.1	2449	3.4	86.43	H143	132SA6	55000
10.8	2490	1.4	134.06	H103	112MS4	22000
10.8	2523	2.1	89.97	H123	132S6	30000
10.7	2549	2.1	89.97	H123	132SA6	30000
10.6	2543	1.4	134.06	H103	100LB4	22000
10.4	2618	1.4	93.36	H103	132S6	22000
10.3	2645	1.4	93.36	H103	132SA6	22000
10.3	2631	2.0	89.97	H123	112MB6	30000
10.1	2664	1.3	143.42	H103	112MS4	22000
10.1	2698	3.1	96.21	H143	132S6	55000
10.0	2731	1.3	93.36	H103	112MB6	22000
10.0	2689	1.9	144.79	H123	112MS4	30000
10.0	2726	3.1	96.21	H143	132SA6	55000
9.9	2720	1.3	143.42	H103	100LB4	22000
9.8	2746	1.8	144.79	H123	100LB4	30000
9.7	2806	1.3	100.07	H103	132S6	22000
9.7	2812	1.9	100.29	H123	132S6	30000
9.6	2835	1.3	100.07	H103	132SA6	22000
9.6	2841	1.8	100.29	H123	132SA6	30000
9.3	2927	1.3	100.07	H103	112MB6	22000
9.3	2883	1.7	155.22	H123	112MS4	30000

5.1 H/HA GEARED MOTORS (50Hz)

3.00 kW

n2 [rpm]	M2 [Nm]	fs	i	Gear reducer	Motor	Fr2 [N]
9.3	2933	1.8	100.29	H123	112MB6	30000
9.3	2931	2.9	104.51	H143	132S6	55000
9.2	2961	2.8	104.51	H143	132SA6	55000
9.1	2944	1.7	155.22	H123	100LB4	30000
9.0	3038	1.7	108.34	H123	132S6	30000
8.9	3070	1.7	108.34	H123	132SA6	30000
8.6	3169	1.7	108.34	H123	112MB6	30000
8.4	3209	1.6	172.80	H123	112MS4	30000
8.4	3251	2.6	115.92	H143	132S6	55000
8.3	3284	2.6	115.92	H143	132SA6	55000
8.2	3277	1.5	172.80	H123	100LB4	30000
8.2	3326	1.6	118.62	H123	132S6	30000
8.1	3361	1.6	118.62	H123	132SA6	30000
7.8	3469	1.5	118.62	H123	112MB6	30000
7.7	3514	1.4	189.19	H123	112MS4	30000
7.6	3594	1.5	128.18	H123	132S6	30000
7.6	3602	2.3	128.47	H143	132S6	55000
7.5	3632	1.4	128.18	H123	132SA6	30000
7.5	3588	1.4	189.19	H123	100LB4	30000
7.5	3640	2.3	128.47	H143	132SA6	55000
7.3	3749	1.4	128.18	H123	112MB6	30000
7.0	3853	1.3	207.43	H123	112MS4	30000
7.0	3913	2.1	139.55	H143	132S6	55000
6.9	3954	2.1	139.55	H143	132SA6	55000
6.8	3934	1.3	207.43	H123	100LB4	30000
6.7	4060	1.3	144.79	H123	132S6	30000
6.6	4102	1.3	144.79	H123	132SA6	30000
6.4	4235	1.2	144.79	H123	112MB6	30000
6.3	4328	1.9	154.33	H143	132S6	55000
6.2	4373	1.9	154.33	H143	132SA6	55000
5.2	5214	1.6	185.96	H143	132S6	55000
5.2	5269	1.6	185.96	H143	132SA6	55000
4.7	5779	1.5	206.08	H143	132S6	55000
4.7	5839	1.4	206.08	H143	132SA6	55000

4.00 kW

n2 [rpm]	M2 [Nm]	fs	i	Gear reducer	Motor	Fr2 [N]
2302.1	16	1.9	1.27	H051	112M2	1238
2278.6	16	1.9	1.27	H051	112MA2	1242
2255.0	16	1.9	1.27	H051	100LB2	1245
1378.8	26	1.7	2.13	H051	112M2	1433
1364.7	26	1.7	2.13	H051	112MA2	1437
1350.6	26	1.7	2.13	H051	100LB2	1442

5.1 H/HA GEARED MOTORS (50Hz)

4.00 kW

n2 [rpm]	M2 [Nm]	fs	i	Gear reducer	Motor	Fr2 [N]
1172.0	31	2.2	2.50	HA61	112M2	1979
1160.0	31	2.2	2.50	HA61	112MA2	1986
1148.0	31	2.2	2.50	HA61	100LB2	1993
1139.4	31	1.7	2.57	H051	112M2	1510
1139.4	31	2.9	2.57	H061	112M2	2415
1139.3	33	1.2	1.27	H051	112M4	1505
1131.4	33	1.2	1.27	H051	112MA4	1508
1127.8	32	1.7	2.57	H051	112MA2	1514
1127.8	32	2.8	2.57	H061	112MA2	2422
1116.1	32	1.6	2.57	H051	100LB2	1519
1116.1	32	2.8	2.57	H061	100LB2	2429
1087.5	34	2.6	1.33	HA61	112M4	2029
1080.0	34	2.6	1.33	HA61	112MA4	2034
1079.1	34	2.3	1.34	H061	112M4	2445
1071.6	35	2.3	1.34	H061	112MA4	2450
1021.6	36	1.7	1.42	H051	112M4	1549
1014.5	37	1.6	1.42	H051	112MA4	1552
925.3	39	1.6	3.17	H051	112M2	1596
915.8	39	1.5	3.17	H051	112MA2	1600
906.3	39	1.5	3.17	H051	100LB2	1604
794.6	45	1.5	3.69	H051	112M2	1659
794.6	45	2.5	3.69	H061	112M2	2665
786.4	45	1.5	3.69	H051	112MA2	1663
786.4	45	2.5	3.69	H061	112MA2	2672
778.3	46	1.5	3.69	H051	100LB2	1668
778.3	46	2.4	3.69	H061	100LB2	2680
732.5	49	2.3	4.00	H061	112M2	2723
725.0	49	2.3	4.00	H061	112MA2	2730
717.5	50	2.3	4.00	H061	100LB2	2738
682.4	54	2.2	2.13	H061	112M4	2763
677.6	55	2.2	2.13	H061	112MA4	2768
668.2	54	1.5	4.38	HA61	112M2	2387
661.4	54	1.5	4.38	HA61	112MA2	2395
654.6	55	1.5	4.38	HA61	100LB2	2403
614.4	58	2.1	4.77	H061	112M2	2849
608.1	59	2.0	4.77	H061	112MA2	2856
601.8	59	2.0	4.77	H061	100LB2	2864
580.0	64	1.4	2.50	HA61	112M4	2502
576.0	64	1.4	2.50	HA61	112MA4	2508
563.9	66	1.8	2.57	H061	112M4	2898
560.0	66	1.8	2.57	H061	112MA4	2903
503.6	71	1.8	5.82	H061	112M2	2992
502.3	75	3.2	1.93	H081	132MA6	3741
498.4	72	1.8	5.82	H061	112MA2	2999
493.3	72	1.8	5.82	H061	100LB2	3007

5.1 H/HA GEARED MOTORS (50Hz)

4.00 kW

n2 [rpm]	M2 [Nm]	fs	i	Gear reducer	Motor	Fr2 [N]
457.9	81	1.6	3.17	H061	112M4	3044
454.7	81	1.6	3.17	H061	112MA4	3049
446.2	83	3.7	3.25	H081	112M4	3867
443.1	84	3.7	3.25	H081	112MA4	3875
393.2	94	1.6	3.69	H061	112M4	3149
390.5	95	1.6	3.69	H061	112MA4	3154
389.6	95	3.3	3.72	H081	112M4	4000
386.9	96	3.2	3.72	H081	112MA4	4000
377.7	99	3.0	2.54	H081	132MA6	4000
362.5	102	1.5	4.00	H061	112M4	3204
362.5	102	3.1	4.00	H081	112M4	4000
360.0	103	1.5	4.00	H061	112MA4	3208
360.0	103	3.1	4.00	H081	112MA4	4000
310.7	119	2.7	4.67	H081	112M4	4000
308.6	120	2.7	4.67	H081	112MA4	4000
304.0	122	1.3	4.77	H061	112M4	3318
301.9	123	1.3	4.77	H061	112MA4	3323
295.4	127	2.6	3.25	H081	132MA6	4000
281.9	130	1.8	5.14	HA52	112M4	2809
281.9	130	2.9	5.14	HA62	112M4	4146
280.0	131	1.8	5.14	HA52	112MA4	2816
280.0	131	2.9	5.14	HA62	112MA4	4156
276.2	134	1.3	5.25	H061	112M4	3378
274.3	135	1.3	5.25	H061	112MA4	3382
269.8	136	3.7	5.38	H062	112M4	9819
267.9	137	3.7	5.38	H062	112MA4	9838
261.8	142	2.3	5.54	H081	112M4	4000
260.0	143	2.3	5.54	H081	112MA4	4000
257.9	145	2.2	3.72	H081	132MA6	4000
253.2	145	1.8	5.73	H052	112M4	5538
251.4	146	1.8	5.73	H052	112MA4	5546
251.1	141	1.5	11.67	HA52	112M2	2920
251.1	141	2.3	11.67	HA62	112M2	4309
248.6	142	1.5	11.67	HA52	112MA2	2930
248.6	142	2.3	11.67	HA62	112MA2	4324
246.0	144	1.5	11.67	HA52	100LB2	2940
246.0	144	2.3	11.67	HA62	100LB2	4339
244.3	150	3.7	5.93	H062	112M4	10089
242.6	151	3.6	5.93	H062	112MA4	10108
240.0	156	2.2	4.00	H081	132MA6	4000
238.4	155	2.2	6.08	H081	112M4	4000
236.7	157	2.2	6.08	H081	112MA4	4000
233.0	157	1.5	6.22	HA52	112M4	2993
233.0	157	2.4	6.22	HA62	112M4	4418
231.4	158	1.5	6.22	HA52	112MA4	3000

5.1 H/HA GEARED MOTORS (50Hz)

4.00 kW

n2 [rpm]	M2 [Nm]	fs	i	Gear reducer	Motor	Fr2 [N]
231.4	158	2.4	6.22	HA62	112MA4	4428
231.1	160	4.0	6.23	H101	112MA4	5000
227.4	165	3.9	4.22	H101	132MA6	5000
210.3	174	1.7	6.89	H052	112M4	5751
208.9	176	1.7	6.89	H052	112MA4	5759
205.7	182	1.8	4.67	H081	132MA6	4000
202.1	175	1.8	14.50	HA62	112M2	4633
200.0	177	1.8	14.50	HA62	112MA2	4649
197.9	179	1.8	14.50	HA62	100LB2	4665
196.9	190	3.4	4.88	H101	132MA6	5000
196.2	187	2.9	7.39	H062	112M4	10698
194.8	188	2.9	7.39	H062	112MA4	10717
193.3	192	1.8	7.50	H081	112M4	4000
192.2	193	3.4	7.55	H101	112M4	5000
192.0	193	1.8	7.50	H081	112MA4	4000
190.8	194	3.3	7.55	H101	112MA4	5000
187.5	196	1.9	7.73	HA62	112M4	4750
186.2	197	1.9	7.73	HA62	112MA4	4761
182.3	205	3.2	5.27	H101	132MA6	5000
178.6	207	2.5	5.38	H062	132MA6	10950
178.1	208	3.5	5.39	H082	132MA6	13822
173.3	216	1.6	5.54	H081	132MA6	4000
173.2	204	1.8	16.91	HA62	112M2	4877
172.6	215	3.0	8.40	H101	112M4	5000
171.7	216	1.6	8.44	H081	112M4	4000
171.5	206	1.8	16.91	HA62	112MA2	4894
171.4	216	3.0	8.40	H101	112MA4	5000
170.6	215	2.8	8.50	H062	112M4	11091
170.5	217	1.6	8.44	H081	112MA4	4000
170.0	216	1.6	8.53	H052	112M4	5978
169.7	209	1.8	16.91	HA62	100LB2	4911
169.4	216	2.8	8.50	H062	112MA4	11111
168.9	217	1.6	8.53	H052	112MA4	5985
161.8	229	2.5	5.93	H062	132MA6	11228
161.5	229	3.2	5.95	H082	132MA6	14212
157.8	237	1.5	6.08	H081	132MA6	4000
154.5	237	2.5	9.39	H062	112M4	11371
154.1	243	2.8	6.23	H101	132MA6	5000
153.6	244	3.9	6.25	H121	132MA6	6000
153.4	239	2.5	9.39	H062	112MA4	11391
151.6	242	1.5	9.56	H052	112M4	6089
150.6	244	1.5	9.56	H052	112MA4	6095
150.4	244	1.9	9.64	HA62	112M4	5113
149.3	246	1.9	9.64	HA62	112MA4	5125
143.2	247	1.4	20.46	HA62	112M2	5197

5.1 H/HA GEARED MOTORS (50Hz)

4.00 kW

n2 [rpm]	M2 [Nm]	fs	i	Gear reducer	Motor	Fr2 [N]
141.7	250	1.4	20.46	HA62	112MA2	5215
140.3	252	1.4	20.46	HA62	100LB2	5233
129.9	285	2.0	7.39	H062	132MA6	11844
129.8	285	2.9	7.39	H082	132MA6	15095
128.0	292	1.3	7.50	H081	132MA6	4000
127.2	294	2.3	7.55	H101	132MA6	5000
124.7	300	3.5	7.70	H121	132MA6	6000
124.3	295	1.5	11.67	HA62	112M4	5448
124.1	296	2.2	11.69	H062	112M4	11989
123.4	297	1.5	11.67	HA62	112MA4	5461
123.2	298	2.2	11.69	H062	112MA4	12000
119.7	309	2.7	8.02	H082	132MA6	15430
114.5	320	2.2	12.67	H062	112M4	12000
114.3	327	2.1	8.40	H101	132MA6	5000
113.7	323	2.2	12.67	H062	112MA4	12000
112.9	328	1.9	8.50	H062	132MA6	12000
108.5	341	2.8	8.85	H082	132MA6	15840
102.3	362	1.7	9.39	H062	132MA6	12000
98.3	373	1.9	14.75	H062	112M4	12000
97.6	376	1.9	14.75	H062	112MA4	12000
97.3	377	4.0	14.90	H082	112M4	16311
96.7	379	4.0	14.90	H082	112MA4	16340
89.0	412	1.9	16.29	H062	112M4	12000
88.4	415	1.9	16.29	H062	112MA4	12000
87.3	420	3.6	16.62	H082	112M4	16774
87.2	425	2.7	11.01	H082	132MA6	16758
86.7	423	3.5	16.62	H082	112MA4	16804
82.1	451	1.5	11.69	H062	132MA6	12000
82.1	447	1.9	17.67	H062	112M4	12000
81.5	450	1.8	17.67	H062	112MA4	12000
78.3	469	3.2	18.53	H082	112M4	17237
77.7	472	3.2	18.53	H082	112MA4	17266
75.8	489	1.5	12.67	H062	132MA6	12000
74.8	490	3.3	19.38	H082	112M4	17430
74.3	494	3.2	19.38	H082	112MA4	17459
71.5	513	1.7	20.28	H062	112M4	12000
71.1	521	2.8	13.50	H082	132MA6	17621
71.0	516	1.6	20.28	H062	112MA4	12000
68.5	516	2.3	42.75	H082	112M2	17886
67.8	522	2.3	42.75	H082	112MA2	17931
67.8	541	3.0	21.39	H082	112M4	17847
67.3	545	2.9	21.39	H082	112MA4	17876
67.1	527	2.3	42.75	H082	100LB2	17976
64.4	575	2.7	14.90	H082	132MA6	18000
63.6	577	2.8	22.80	H082	112M4	18000

5.1 H/HA GEARED MOTORS (50Hz)

4.00 kW

n2 [rpm]	M2 [Nm]	fs	i	Gear reducer	Motor	Fr2 [N]
63.2	581	2.8	22.80	H082	112MA4	18000
62.3	589	1.4	23.27	H062	112M4	12000
61.9	593	1.4	23.27	H062	112MA4	12000
60.9	581	2.1	48.13	H082	112M2	18000
60.2	587	2.0	48.13	H082	112MA2	18000
59.6	594	2.0	48.13	H082	100LB2	18000
57.8	641	2.5	16.62	H082	132MA6	18000
54.5	673	2.4	26.60	H082	112M4	18000
54.1	677	2.4	26.60	H082	112MA4	18000
52.0	705	2.3	27.88	H082	112M4	18000
51.8	715	2.2	18.53	H082	132MA6	18000
51.8	668	1.8	56.53	H083	112M2	18000
51.6	710	2.3	27.88	H082	112MA4	18000
51.3	675	1.8	56.53	H083	112MA2	18000
50.8	682	1.8	56.53	H083	100LB2	18000
49.5	748	2.2	19.38	H082	132MA6	18000
46.5	788	2.0	31.15	H082	112M4	18000
46.2	793	2.0	31.15	H082	112MA4	18000
44.9	825	2.0	21.39	H082	132MA6	18000
42.4	865	3.7	34.20	H102	112M4	22000
42.2	869	1.8	34.38	H082	112M4	18000
42.1	880	1.9	22.80	H082	132MA6	18000
42.1	871	3.7	34.20	H102	112MA4	22000
41.9	875	1.8	34.38	H082	112MA4	18000
41.0	845	1.6	71.48	H083	112M2	18000
40.6	854	1.6	71.48	H083	112MA2	18000
40.2	863	1.6	71.48	H083	100LB2	18000
40.1	925	3.7	23.97	H102	132MA6	22000
37.7	973	2.9	38.45	H102	112M4	22000
37.5	979	1.6	38.70	H082	112M4	18000
37.4	979	2.9	38.45	H102	112MA4	22000
37.2	986	1.6	38.70	H082	112MA4	18000
37.1	999	3.5	25.89	H102	132MA6	22000
36.1	1026	1.6	26.60	H082	132MA6	18000
35.1	1045	3.2	41.30	H102	112M4	22000
34.9	1052	3.1	41.30	H102	112MA4	22000
34.4	1076	1.6	27.88	H082	132MA6	18000
33.9	1081	1.5	42.75	H082	112M4	18000
33.7	1089	1.5	42.75	H082	112MA4	18000
33.4	1108	3.1	28.73	H102	132MA6	22000
31.6	1159	2.8	45.82	H102	112M4	22000
31.4	1167	2.8	45.82	H102	112MA4	22000
31.2	1185	2.8	30.72	H102	132MA6	22000
30.8	1202	1.4	31.15	H082	132MA6	18000
30.1	1217	1.3	48.13	H082	112M4	18000

5.1 H/HA GEARED MOTORS (50Hz)

4.00 kW

n2 [rpm]	M2 [Nm]	fs	i	Gear reducer	Motor	Fr2 [N]
29.9	1226	1.3	48.13	H082	112MA4	18000
28.1	1320	2.5	34.20	H102	132MA6	22000
28.1	1303	2.5	51.52	H102	112M4	22000
28.0	1312	2.5	51.52	H102	112MA4	22000
27.9	1326	1.3	34.38	H082	132MA6	18000
26.6	1394	3.8	36.13	H122	132MA6	30000
25.0	1484	2.0	38.45	H102	132MA6	22000
23.2	1593	2.2	41.30	H102	132MA6	22000
21.8	1701	3.1	44.10	H122	132MA6	30000
21.5	1667	3.0	67.32	H123	112M4	30000
21.4	1679	3.0	67.32	H123	112MA4	30000
21.0	1768	2.0	45.82	H102	132MA6	22000
21.0	1729	3.0	45.77	H123	132MA6	30000
20.8	1726	2.0	69.69	H103	112M4	22000
20.7	1738	2.0	69.69	H103	112MA4	22000
19.7	1825	2.7	73.71	H123	112M4	30000
19.5	1838	2.7	73.71	H123	112MA4	30000
18.6	1988	1.7	51.52	H102	132MA6	22000
18.2	1977	1.8	79.82	H103	112M4	22000
18.0	1990	1.8	79.82	H103	112MA4	22000
17.4	2064	2.4	83.34	H123	112M4	30000
17.3	2096	1.8	55.47	H103	132MA6	22000
17.3	2078	2.4	83.34	H123	112MA4	30000
17.2	2084	1.7	84.16	H103	112M4	22000
17.2	2111	2.5	55.87	H123	132MA6	30000
17.1	2099	1.7	84.16	H103	112MA4	22000
16.2	2237	3.8	59.22	H143	132MA6	55000
16.1	2228	2.2	89.97	H123	112M4	30000
16.0	2244	2.2	89.97	H123	112MA4	30000
15.5	2312	1.5	93.36	H103	112M4	22000
15.4	2328	1.5	93.36	H103	112MA4	22000
15.2	2380	3.5	62.99	H143	132MA6	55000
14.5	2478	1.4	100.07	H103	112M4	22000
14.5	2483	2.0	100.29	H123	112M4	30000
14.4	2495	1.4	100.07	H103	112MA4	22000
14.4	2501	2.0	100.29	H123	112MA4	30000
14.3	2543	2.1	67.32	H123	132MA6	30000
13.8	2633	1.4	69.69	H103	132MA6	22000
13.5	2696	3.1	71.35	H143	132MA6	55000
13.4	2683	1.9	108.34	H123	112M4	30000
13.3	2702	1.9	108.34	H123	112MA4	30000
13.0	2785	1.9	73.71	H123	132MA6	30000
12.2	2984	1.2	79.82	H103	132MA6	22000
12.2	2938	1.7	118.62	H123	112M4	30000
12.1	2958	1.7	118.62	H123	112MA4	30000

5.1 H/HA GEARED MOTORS (50Hz)

4.00 kW

n2 [rpm]	M2 [Nm]	fs	i	Gear reducer	Motor	Fr2 [N]
12.1	2987	2.8	79.07	H143	132MA6	55000
11.5	3148	1.7	83.34	H123	132MA6	30000
11.3	3174	1.6	128.18	H123	112M4	30000
11.2	3196	1.6	128.18	H123	112MA4	30000
11.1	3265	2.6	86.43	H143	132MA6	55000
10.7	3399	1.5	89.97	H123	132MA6	30000
10.0	3585	1.4	144.79	H123	112M4	30000
10.0	3634	2.3	96.21	H143	132MA6	55000
9.9	3610	1.4	144.79	H123	112MA4	30000
9.6	3789	1.4	100.29	H123	132MA6	30000
9.3	3844	1.3	155.22	H123	112M4	30000
9.3	3871	1.3	155.22	H123	112MA4	30000
9.2	3948	2.1	104.51	H143	132MA6	55000
8.9	4093	1.3	108.34	H123	132MA6	30000
8.3	4379	1.9	115.92	H143	132MA6	55000
7.5	4853	1.7	128.47	H143	132MA6	55000
6.9	5272	1.6	139.55	H143	132MA6	55000
6.2	5830	1.4	154.33	H143	132MA6	55000

4.80 kW

n2 [rpm]	M2 [Nm]	fs	i	Gear reducer	Motor	Fr2 [N]
1072.5	41	2.2	1.33	HA61	112MB4	2038
1064.2	42	1.9	1.34	H061	112MB4	2415
1007.5	44	1.4	1.42	H051	112MB4	1523
672.9	66	1.8	2.13	H061	112MB4	2710
562.6	79	3.5	2.54	H081	112MB4	3574
556.1	80	1.5	2.57	H061	112MB4	2832
451.6	98	1.3	3.17	H061	112MB4	2960
440.0	101	3.1	3.25	H081	112MB4	3814
387.8	115	1.3	3.69	H061	112MB4	3050
384.2	116	2.7	3.72	H081	112MB4	3948
357.5	124	1.2	4.00	H061	112MB4	3095
357.5	124	2.6	4.00	H081	112MB4	4000
306.4	145	2.2	4.67	H081	112MB4	4000
278.1	158	1.5	5.14	HA52	112MB4	2822
278.1	158	2.4	5.14	HA62	112MB4	4166
271.5	164	3.8	5.27	H101	112MB4	5000
266.0	165	3.0	5.38	H062	112MB4	9696
258.2	172	1.9	5.54	H081	112MB4	4000
249.7	176	1.5	5.73	H052	112MB4	5358
240.9	183	3.0	5.93	H062	112MB4	9950
235.1	189	1.8	6.08	H081	112MB4	4000
229.8	191	2.0	6.22	HA62	112MB4	4439

5.1 H/HA GEARED MOTORS (50Hz)

4.80 kW

n2 [rpm]	M2 [Nm]	fs	i	Gear reducer	Motor	Fr2 [N]
229.5	194	3.3	6.23	H101	112MB4	5000
193.5	227	2.4	7.39	H062	112MB4	10516
190.7	233	1.5	7.50	H081	112MB4	4000
189.5	235	2.8	7.55	H101	112MB4	5000
184.9	238	1.6	7.73	HA62	112MB4	4772
170.2	261	2.5	8.40	H101	112MB4	5000
169.3	263	1.3	8.44	H081	112MB4	4000
168.2	262	2.3	8.50	H062	112MB4	10876
152.4	289	2.1	9.39	H062	112MB4	11130
148.3	297	1.6	9.64	HA62	112MB4	5137
122.4	360	1.8	11.69	H062	112MB4	11679
112.9	390	1.8	12.67	H062	112MB4	11874
105.9	415	3.4	13.50	H082	112MB4	15638
96.9	454	1.5	14.75	H062	112MB4	12000
96.0	458	3.3	14.90	H082	112MB4	16020
87.8	501	1.6	16.29	H062	112MB4	12000
86.1	511	2.9	16.62	H082	112MB4	16444
80.9	544	1.5	17.67	H062	112MB4	12000
77.2	570	2.6	18.53	H082	112MB4	16861
73.8	597	2.7	19.38	H082	112MB4	17034
66.9	658	2.4	21.39	H082	112MB4	17404
62.7	702	2.3	22.80	H082	112MB4	17640
53.8	819	2.0	26.60	H082	112MB4	18000
51.3	858	1.9	27.88	H082	112MB4	18000
49.8	884	3.7	28.73	H102	112MB4	22000
46.5	945	3.4	30.72	H102	112MB4	22000
45.9	959	1.7	31.15	H082	112MB4	18000
41.8	1052	3.0	34.20	H102	112MB4	22000
41.6	1058	1.5	34.38	H082	112MB4	18000
37.2	1183	2.4	38.45	H102	112MB4	22000
36.9	1191	1.3	38.70	H082	112MB4	18000
34.6	1271	2.6	41.30	H102	112MB4	22000
33.5	1316	1.2	42.75	H082	112MB4	18000
31.2	1410	2.3	45.82	H102	112MB4	22000
27.8	1585	2.1	51.52	H102	112MB4	22000
21.2	2029	2.5	67.32	H123	112MB4	30000
20.5	2100	1.7	69.69	H103	112MB4	22000
19.4	2221	2.3	73.71	H123	112MB4	30000
17.9	2405	1.5	79.82	H103	112MB4	22000
17.2	2511	2.0	83.34	H123	112MB4	30000
17.0	2536	1.4	84.16	H103	112MB4	22000
15.9	2711	1.8	89.97	H123	112MB4	30000
15.3	2813	1.2	93.36	H103	112MB4	22000
14.3	3022	1.7	100.29	H123	112MB4	30000
13.2	3265	1.5	108.34	H123	112MB4	30000

5.1 H/HA GEARED MOTORS (50Hz)

4.80 kW

n2 [rpm]	M2 [Nm]	fs	i	Gear reducer	Motor	Fr2 [N]
12.1	3574	1.4	118.62	H123	112MB4	30000
11.2	3862	1.3	128.18	H123	112MB4	30000

5.50 kW

n2 [rpm]	M2 [Nm]	fs	i	Gear reducer	Motor	Fr2 [N]
2286.4	22	1.4	1.27	H051	112MB2	1215
1369.4	36	1.3	2.13	H051	112MB2	1394
1164.0	42	1.6	2.50	HA61	112MB2	1983
1131.7	43	1.2	2.57	H051	112MB2	1461
1131.7	43	2.1	2.57	H061	112MB2	2352
918.9	54	1.1	3.17	H051	112MB2	1535
789.2	62	1.8	3.69	H061	112MB2	2574
761.3	67	3.4	1.93	H081	132MS4	3253
750.9	68	3.4	1.93	H081	132S4	3265
740.0	70	3.0	1.30	H081	132MB6	3276
727.5	68	1.7	4.00	H061	112MB2	2623
672.0	77	3.0	1.43	H081	132MB6	3362
663.7	74	1.1	4.38	HA61	112MB2	2392
610.2	81	1.5	4.77	H061	112MB2	2729
578.4	88	3.2	2.54	H081	132MS4	3502
574.4	89	3.2	2.54	H081	132S4	3508
500.2	98	1.3	5.82	H061	112MB2	2845
497.1	104	2.3	1.93	H081	132MB6	3637
452.3	113	2.8	3.25	H081	132MS4	3729
446.2	114	2.7	3.25	H081	132S4	3741
394.9	129	2.4	3.72	H081	132MS4	3854
389.6	131	2.4	3.72	H081	132S4	3867
377.7	136	2.2	2.54	H081	132MB6	3890
367.5	139	2.3	4.00	H081	132MS4	3920
362.5	141	2.3	4.00	H081	132S4	3933
315.0	162	2.0	4.67	H081	132MS4	4000
310.7	164	2.0	4.67	H081	132S4	4000
301.5	169	3.7	4.88	H101	132MS4	5000
297.4	171	3.6	4.88	H101	132S4	5000
295.4	174	1.9	3.25	H081	132MB6	4000
293.3	175	3.6	3.27	H101	132MB6	5000
279.1	183	3.4	5.27	H101	132MS4	5000
275.3	185	3.4	5.27	H101	132S4	5000
273.5	184	2.7	5.38	H062	132MS4	9489
272.8	185	3.8	5.39	H082	132MS4	11990
269.8	187	2.7	5.38	H062	132S4	9522
269.1	187	3.7	5.39	H082	132S4	12037
265.4	192	1.7	5.54	H081	132MS4	4000

5.1 H/HA GEARED MOTORS (50Hz)

5.50 kW

n2 [rpm]	M2 [Nm]	fs	i	Gear reducer	Motor	Fr2 [N]
261.8	195	1.7	5.54	H081	132S4	4000
259.5	198	3.2	3.70	H101	132MB6	5000
257.9	200	1.6	3.72	H081	132MB6	4000
249.4	195	1.7	11.67	HA62	112MB2	4319
247.7	204	2.7	5.93	H062	132MS4	9728
247.2	204	3.4	5.95	H082	132MS4	12326
244.3	206	2.7	5.93	H062	132S4	9761
243.9	207	3.4	5.95	H082	132S4	12374
241.6	211	1.6	6.08	H081	132MS4	4000
240.0	214	1.6	4.00	H081	132MB6	4000
238.4	214	1.6	6.08	H081	132S4	4000
235.9	216	3.0	6.23	H101	132MS4	5000
232.7	219	2.9	6.23	H101	132S4	5000
227.4	226	2.8	4.22	H101	132MB6	5000
205.7	250	1.3	4.67	H081	132MB6	4000
200.7	242	1.3	14.50	HA62	112MB2	4644
200.0	257	3.6	4.80	H121	132MB6	6000
198.9	254	2.2	7.39	H062	132MS4	10257
198.8	254	3.2	7.39	H082	132MS4	13088
196.9	261	2.5	4.88	H101	132MB6	5000
196.2	257	2.1	7.39	H062	132S4	10290
196.1	257	3.1	7.39	H082	132S4	13137
196.0	260	1.3	7.50	H081	132MS4	4000
194.8	262	2.5	7.55	H101	132MS4	5000
193.3	264	1.3	7.50	H081	132S4	4000
192.2	265	2.5	7.55	H101	132S4	5000
190.9	267	3.7	7.70	H121	132MS4	6000
188.3	271	3.7	7.70	H121	132S4	6000
184.1	280	3.3	5.21	H121	132MB6	6000
183.3	275	2.9	8.02	H082	132MS4	13378
182.3	282	2.3	5.27	H101	132MB6	5000
180.8	279	2.9	8.02	H082	132S4	13427
178.6	285	1.8	5.38	H062	132MB6	10497
178.1	286	2.6	5.39	H082	132MB6	13466
175.0	291	2.2	8.40	H101	132MS4	5000
174.1	293	1.2	8.44	H081	132MS4	4000
172.9	292	2.1	8.50	H062	132MS4	10589
172.6	295	2.2	8.40	H101	132S4	5000
172.1	283	1.3	16.91	HA62	112MB2	4888
171.7	297	1.2	8.44	H081	132S4	4000
170.6	296	2.0	8.50	H062	132S4	10621
166.1	304	3.0	8.85	H082	132MS4	13730
163.8	308	2.9	8.85	H082	132S4	13780
161.8	315	1.8	5.93	H062	132MB6	10728
161.5	315	2.3	5.95	H082	132MB6	13818

5.1 H/HA GEARED MOTORS (50Hz)

5.50 kW

n2 [rpm]	M2 [Nm]	fs	i	Gear reducer	Motor	Fr2 [N]
156.6	322	1.9	9.39	H062	132MS4	10821
154.5	326	1.8	9.39	H062	132S4	10852
154.1	334	2.0	6.23	H101	132MB6	5000
153.6	335	2.8	6.25	H121	132MB6	6000
133.6	378	2.9	11.01	H082	132MS4	14520
131.7	383	2.9	11.01	H082	132S4	14570
129.9	392	1.5	7.39	H062	132MB6	11221
129.8	392	2.1	7.39	H082	132MB6	14605
127.2	404	1.7	7.55	H101	132MB6	5000
125.8	401	1.6	11.69	H062	132MS4	11314
124.7	413	2.5	7.70	H121	132MB6	6000
124.1	406	1.6	11.69	H062	132S4	11343
119.7	426	2.0	8.02	H082	132MB6	14899
116.1	434	1.6	12.67	H062	132MS4	11485
114.5	440	1.6	12.67	H062	132S4	11514
114.3	450	1.5	8.40	H101	132MB6	5000
108.9	463	3.0	13.50	H082	132MS4	15261
108.5	470	2.0	8.85	H082	132MB6	15254
107.4	469	3.0	13.50	H082	132S4	15311
98.7	511	2.9	14.90	H082	132MS4	15616
97.3	518	2.9	14.90	H082	132S4	15665
90.3	559	1.4	16.29	H062	132MS4	11974
89.0	566	1.4	16.29	H062	132S4	11998
88.5	570	2.6	16.62	H082	132MS4	16005
87.3	578	2.6	16.62	H082	132S4	16054
87.2	584	2.0	11.01	H082	132MB6	16029
79.4	635	2.4	18.53	H082	132MS4	16386
78.3	644	2.3	18.53	H082	132S4	16433
75.8	665	2.4	19.38	H082	132MS4	16542
74.8	674	2.4	19.38	H082	132S4	16589
71.1	716	2.1	13.50	H082	132MB6	16728
69.0	705	1.7	42.75	H082	132S2	16977
68.7	734	2.2	21.39	H082	132MS4	16874
68.1	715	1.7	42.75	H082	112MB2	17024
68.1	715	1.7	42.75	H082	132SA2	17024
67.8	744	2.2	21.39	H082	132S4	16919
64.5	782	2.0	22.80	H082	132MS4	17084
64.4	790	2.0	14.90	H082	132MB6	17049
63.6	793	2.0	22.80	H082	132S4	17128
61.3	794	1.5	48.13	H082	132S2	17378
60.5	805	1.5	48.13	H082	112MB2	17423
60.5	805	1.5	48.13	H082	132SA2	17423
60.5	834	4.0	23.97	H102	132S4	22000
59.7	854	3.9	16.09	H102	132MB6	22000
57.8	881	1.8	16.62	H082	132MB6	17390

5.1 H/HA GEARED MOTORS (50Hz)

5.50 kW

n2 [rpm]	M2 [Nm]	fs	i	Gear reducer	Motor	Fr2 [N]
56.8	888	3.7	25.89	H102	132MS4	22000
56.0	900	3.7	25.89	H102	132S4	22000
55.3	912	1.8	26.60	H082	132MS4	17566
54.5	925	1.7	26.60	H082	132S4	17607
53.8	947	3.5	17.85	H102	132MB6	22000
52.7	956	1.7	27.88	H082	132MS4	17705
52.0	970	1.7	27.88	H082	132S4	17744
51.8	983	1.6	18.53	H082	132MB6	17710
51.2	985	3.3	28.73	H102	132MS4	22000
50.5	999	3.3	28.73	H102	132S4	22000
49.5	1028	1.6	19.38	H082	132MB6	17836
48.4	1053	3.2	19.85	H102	132MB6	22000
47.9	1054	3.0	30.72	H102	132MS4	22000
47.2	1069	1.5	31.15	H082	132MS4	18000
47.2	1068	3.0	30.72	H102	132S4	22000
46.5	1083	1.5	31.15	H082	132S4	18000
44.9	1135	1.5	21.39	H082	132MB6	18000
44.8	1138	3.0	21.44	H102	132MB6	22000
43.0	1173	2.7	34.20	H102	132MS4	22000
42.8	1179	1.4	34.38	H082	132MS4	18000
42.4	1189	2.7	34.20	H102	132S4	22000
42.2	1195	1.3	34.38	H082	132S4	18000
40.1	1272	2.7	23.97	H102	132MB6	22000
40.1	1256	4.0	36.13	H122	132S4	30000
38.2	1319	2.1	38.45	H102	132MS4	22000
38.0	1328	1.2	38.70	H082	132MS4	18000
37.7	1337	2.1	38.45	H102	132S4	22000
37.5	1346	1.2	38.70	H082	132S4	18000
37.1	1374	2.5	25.89	H102	132MB6	22000
35.6	1417	2.3	41.30	H102	132MS4	22000
35.1	1436	2.3	41.30	H102	132S4	22000
34.9	1458	3.6	27.49	H122	132MB6	30000
33.4	1524	2.3	28.73	H102	132MB6	22000
33.3	1513	3.3	44.10	H122	132MS4	30000
32.9	1534	3.3	44.10	H122	132S4	30000
32.1	1572	2.1	45.82	H102	132MS4	22000
32.1	1584	3.3	29.86	H122	132MB6	30000
32.1	1537	3.3	45.77	H123	132MS4	30000
31.7	1559	3.2	45.77	H123	132S4	30000
31.6	1593	2.1	45.82	H102	132S4	22000
31.2	1630	2.1	30.72	H102	132MB6	22000
29.1	1751	3.0	33.00	H122	132MB6	30000
28.5	1767	1.9	51.52	H102	132MS4	22000
28.1	1791	1.8	51.52	H102	132S4	22000
28.1	1814	1.9	34.20	H102	132MB6	22000

5.1 H/HA GEARED MOTORS (50Hz)

5.50 kW

n2 [rpm]	M2 [Nm]	fs	i	Gear reducer	Motor	Fr2 [N]
26.6	1917	2.7	36.13	H122	132MB6	30000
26.5	1863	1.9	55.47	H103	132MS4	22000
26.3	1876	2.7	55.87	H123	132MS4	30000
26.1	1889	1.9	55.47	H103	132S4	22000
26.0	1902	2.6	55.87	H123	132S4	30000
25.0	2040	1.4	38.45	H102	132MB6	22000
24.5	2016	4.0	59.22	H143	132S4	55000
23.3	2116	3.8	62.99	H143	132MS4	55000
23.2	2191	1.6	41.30	H102	132MB6	22000
23.0	2145	3.7	62.99	H143	132S4	55000
21.8	2340	2.2	44.10	H122	132MB6	30000
21.8	2261	2.2	67.32	H123	132MS4	30000
21.5	2292	2.2	67.32	H123	132S4	30000
21.1	2341	1.5	69.69	H103	132MS4	22000
21.0	2431	1.4	45.82	H102	132MB6	22000
21.0	2378	2.2	45.77	H123	132MB6	30000
20.8	2373	1.5	69.69	H103	132S4	22000
20.6	2397	3.3	71.35	H143	132MS4	55000
20.3	2430	3.3	71.35	H143	132S4	55000
19.9	2476	2.0	73.71	H123	132MS4	30000
19.7	2510	2.0	73.71	H123	132S4	30000
18.6	2733	1.3	51.52	H102	132MB6	22000
18.6	2656	3.0	79.07	H143	132MS4	55000
18.4	2681	1.3	79.82	H103	132MS4	22000
18.3	2693	3.0	79.07	H143	132S4	55000
18.2	2718	1.3	79.82	H103	132S4	22000
17.9	2780	3.0	53.53	H143	132MB6	55000
17.6	2799	1.8	83.34	H123	132MS4	30000
17.5	2827	1.2	84.16	H103	132MS4	22000
17.4	2838	1.8	83.34	H123	132S4	30000
17.3	2882	1.3	55.47	H103	132MB6	22000
17.2	2866	1.2	84.16	H103	132S4	22000
17.2	2902	1.8	55.87	H123	132MB6	30000
17.0	2903	2.8	86.43	H143	132MS4	55000
16.8	2943	2.7	86.43	H143	132S4	55000
16.3	3022	1.7	89.97	H123	132MS4	30000
16.2	3076	2.7	59.22	H143	132MB6	55000
16.1	3064	1.6	89.97	H123	132S4	30000
15.3	3231	2.5	96.21	H143	132MS4	55000
15.2	3272	2.6	62.99	H143	132MB6	55000
15.1	3276	2.4	96.21	H143	132S4	55000
14.7	3368	1.5	100.29	H123	132MS4	30000
14.5	3415	1.5	100.29	H123	132S4	30000
14.3	3497	1.5	67.32	H123	132MB6	30000
14.1	3510	2.3	104.51	H143	132MS4	55000

5.1 H/HA GEARED MOTORS (50Hz)

5.50 kW

n2 [rpm]	M2 [Nm]	fs	i	Gear reducer	Motor	Fr2 [N]
13.9	3559	2.2	104.51	H143	132S4	55000
13.6	3639	1.4	108.34	H123	132MS4	30000
13.5	3706	2.3	71.35	H143	132MB6	55000
13.4	3689	1.4	108.34	H123	132S4	30000
13.0	3829	1.4	73.71	H123	132MB6	30000
12.7	3893	2.1	115.92	H143	132MS4	55000
12.5	3947	2.0	115.92	H143	132S4	55000
12.4	3984	1.3	118.62	H123	132MS4	30000
12.2	4039	1.2	118.62	H123	132S4	30000
12.1	4108	2.0	79.07	H143	132MB6	55000
11.4	4315	1.9	128.47	H143	132MS4	55000
11.3	4374	1.8	128.47	H143	132S4	55000
11.1	4490	1.9	86.43	H143	132MB6	55000
10.5	4687	1.7	139.55	H143	132MS4	55000
10.4	4752	1.7	139.55	H143	132S4	55000
10.0	4997	1.7	96.21	H143	132MB6	55000
9.5	5184	1.5	154.33	H143	132MS4	55000
9.4	5255	1.5	154.33	H143	132S4	55000
9.2	5429	1.5	104.51	H143	132MB6	55000
8.3	6021	1.4	115.92	H143	132MB6	55000
7.9	6246	1.3	185.96	H143	132MS4	55000
7.8	6332	1.3	185.96	H143	132S4	55000
7.5	6673	1.3	128.47	H143	132MB6	55000

7.50 kW

n2 [rpm]	M2 [Nm]	fs	i	Gear reducer	Motor	Fr2 [N]
1125.4	62	3.2	1.30	H081	132MA4	2848
1125.4	62	3.2	1.30	H081	132M4	2848
1022.0	68	3.2	1.43	H081	132MA4	2923
1022.0	68	3.2	1.43	H081	132M4	2923
756.1	92	2.5	1.93	H081	132M4	3160
750.9	93	2.5	1.93	H081	132MA4	3166
574.4	121	2.3	2.54	H081	132M4	3378
570.5	122	2.3	2.54	H081	132MA4	3383
477.3	147	3.2	2.03	H101	160M6	4693
449.2	155	2.0	3.25	H081	132M4	3568
446.2	156	2.0	3.25	H081	132MA4	3574
446.1	156	3.9	3.27	H101	132M4	4785
443.1	157	3.8	3.27	H101	132MA4	4794
394.6	176	3.4	3.70	H101	132M4	4947
392.2	177	1.8	3.72	H081	132M4	3669
391.9	177	3.4	3.70	H101	132MA4	4956
390.9	180	3.2	2.48	H101	160M6	4955

5.1 H/HA GEARED MOTORS (50Hz)

7.50 kW

n2 [rpm]	M2 [Nm]	fs	i	Gear reducer	Motor	Fr2 [N]
389.6	178	1.7	3.72	H081	132MA4	3674
365.0	190	1.7	4.00	H081	132M4	3721
362.5	192	1.7	4.00	H081	132MA4	3726
345.8	201	3.0	4.22	H101	132M4	5000
343.4	202	3.0	4.22	H101	132MA4	5000
328.3	214	3.9	2.95	H121	160M6	6000
312.9	222	1.4	4.67	H081	132M4	3827
310.7	224	1.4	4.67	H081	132MA4	3832
308.6	227	3.8	3.14	H121	160M6	6000
304.2	228	3.8	4.80	H121	132M4	6000
302.1	230	3.8	4.80	H121	132MA4	6000
299.5	232	2.7	4.88	H101	132M4	5000
297.4	234	2.7	4.88	H101	132MA4	5000
296.4	237	2.7	3.27	H101	160M6	5000
280.0	248	3.5	5.21	H121	132M4	6000
278.1	250	3.5	5.21	H121	132MA4	6000
277.2	251	2.5	5.27	H101	132M4	5000
275.3	252	2.5	5.27	H101	132MA4	5000
271.6	253	2.0	5.38	H062	132M4	9112
271.0	259	3.4	3.58	H121	160M6	6000
270.9	254	2.8	5.39	H082	132M4	11704
269.8	255	2.0	5.38	H062	132MA4	9126
269.1	256	2.7	5.39	H082	132MA4	11725
263.6	264	1.3	5.54	H081	132M4	3934
262.2	268	2.4	3.70	H101	160M6	5000
261.8	265	1.2	5.54	H081	132MA4	3938
246.0	280	2.0	5.93	H062	132M4	9310
245.5	280	2.5	5.95	H082	132M4	12008
244.3	281	2.0	5.93	H062	132MA4	9324
243.9	282	2.5	5.95	H082	132MA4	12030
240.0	289	1.2	6.08	H081	132MA4	3987
240.0	289	1.2	6.08	H081	132M4	3987
235.6	298	3.0	4.12	H121	160M6	6000
234.3	297	2.2	6.23	H101	132M4	5000
233.6	297	3.0	6.25	H121	132M4	6000
232.7	299	2.1	6.23	H101	132MA4	5000
232.0	299	3.0	6.25	H121	132MA4	6000
229.7	305	2.1	4.22	H101	160M6	5000
202.1	347	2.6	4.80	H121	160M6	6000
199.0	353	1.8	4.88	H101	160M6	5000
197.5	348	1.6	7.39	H062	132M4	9732
197.4	348	2.3	7.39	H082	132M4	12688
196.2	350	1.6	7.39	H062	132MA4	9745
196.1	351	2.3	7.39	H082	132MA4	12709
193.5	359	1.8	7.55	H101	132M4	5000

5.1 H/HA GEARED MOTORS (50Hz)

7.50 kW

n2 [rpm]	M2 [Nm]	fs	i	Gear reducer	Motor	Fr2 [N]
192.2	362	1.8	7.55	H101	132MA4	5000
189.6	366	2.7	7.70	H121	132M4	6000
188.3	369	2.7	7.70	H121	132MA4	6000
186.0	377	2.4	5.21	H121	160M6	6000
184.2	381	1.7	5.27	H101	160M6	5000
182.0	378	2.1	8.02	H082	132M4	12941
180.8	380	2.1	8.02	H082	132MA4	12963
180.0	386	1.9	5.39	H082	160M6	12958
173.8	400	1.6	8.40	H101	132M4	5000
172.6	402	1.6	8.40	H101	132MA4	5000
171.8	400	1.5	8.50	H062	132M4	9983
170.6	403	1.5	8.50	H062	132MA4	9995
165.0	417	2.2	8.85	H082	132M4	13247
163.8	420	2.1	8.85	H082	132MA4	13268
163.1	426	1.7	5.95	H082	160M6	13262
155.7	451	1.5	6.23	H101	160M6	5000
155.2	452	2.1	6.25	H121	160M6	6000
132.6	518	2.1	11.01	H082	132M4	13913
131.7	522	2.1	11.01	H082	132MA4	13933
131.2	529	1.6	7.39	H082	160M6	13922
128.6	546	1.3	7.55	H101	160M6	5000
126.0	557	1.9	7.70	H121	160M6	6000
120.9	574	1.5	8.02	H082	160M6	14162
109.6	634	1.5	8.85	H082	160M6	14444
108.1	636	2.2	13.50	H082	132M4	14511
107.4	640	2.2	13.50	H082	132MA4	14530
98.0	702	2.1	14.90	H082	132M4	14785
97.3	706	2.1	14.90	H082	132MA4	14804
88.1	788	1.5	11.01	H082	160M6	15032
87.9	783	1.9	16.62	H082	132M4	15075
87.5	794	4.0	11.09	H102	160M6	22000
87.3	788	1.9	16.62	H082	132MA4	15093
81.8	841	3.8	17.85	H102	132M4	22000
81.2	847	3.8	17.85	H102	132MA4	22000
78.8	872	1.7	18.53	H082	132M4	15346
78.3	878	1.7	18.53	H082	132MA4	15362
75.3	913	1.8	19.38	H082	132M4	15452
74.8	919	1.7	19.38	H082	132MA4	15468
73.6	935	3.4	19.85	H102	132M4	22000
73.1	941	3.4	19.85	H102	132MA4	22000
72.8	954	3.4	13.32	H102	160M6	22000
71.9	967	1.5	13.50	H082	160M6	15514
69.0	962	1.2	42.75	H082	132M2	15805
68.3	1007	1.6	21.39	H082	132M4	15668
68.1	975	1.2	42.75	H082	132SB2	15835

5.1 H/HA GEARED MOTORS (50Hz)

7.50 kW

n2 [rpm]	M2 [Nm]	fs	i	Gear reducer	Motor	Fr2 [N]
68.1	1010	3.2	21.44	H102	132M4	22000
67.8	1014	1.6	21.39	H082	132MA4	15682
67.6	1017	3.1	21.44	H102	132MA4	22000
65.1	1066	1.5	14.90	H082	160M6	15715
64.0	1074	1.5	22.80	H082	132M4	15796
63.6	1081	1.5	22.80	H082	132MA4	15809
61.3	1083	1.1	48.13	H082	132M2	16057
60.9	1129	2.9	23.97	H102	132M4	22000
60.5	1098	1.1	48.13	H082	132SB2	16084
60.5	1137	2.9	23.97	H102	132MA4	22000
60.3	1152	2.9	16.09	H102	160M6	22000
56.4	1220	2.7	25.89	H102	132M4	22000
56.0	1228	2.7	25.89	H102	132MA4	22000
54.3	1278	2.6	17.85	H102	160M6	22000
53.1	1295	3.9	27.49	H122	132M4	30000
52.7	1304	3.8	27.49	H122	132MA4	30000
50.8	1353	2.4	28.73	H102	132M4	22000
50.5	1362	2.4	28.73	H102	132MA4	22000
50.2	1383	3.8	19.32	H122	160M6	30000
48.9	1421	2.4	19.85	H102	160M6	22000
48.9	1406	3.6	29.86	H122	132M4	30000
48.6	1416	3.5	29.86	H122	132MA4	30000
47.5	1447	2.2	30.72	H102	132M4	22000
47.2	1457	2.2	30.72	H102	132MA4	22000
47.2	1473	3.6	20.57	H122	160M6	30000
45.2	1535	2.2	21.44	H102	160M6	22000
44.2	1554	3.2	33.00	H122	132M4	30000
43.9	1565	3.2	33.00	H122	132MA4	30000
43.1	1613	3.3	22.52	H122	160M6	30000
42.7	1611	2.0	34.20	H102	132M4	22000
42.4	1622	2.0	34.20	H102	132MA4	22000
40.5	1716	2.0	23.97	H102	160M6	22000
40.4	1702	2.9	36.13	H122	132M4	30000
40.1	1713	2.9	36.13	H122	132MA4	30000
39.6	1752	3.0	24.47	H122	160M6	30000
38.0	1811	1.5	38.45	H102	132M4	22000
37.7	1823	1.5	38.45	H102	132MA4	22000
37.5	1854	1.9	25.89	H102	160M6	22000
35.4	1945	1.7	41.30	H102	132M4	22000
35.3	1968	2.7	27.49	H122	160M6	30000
35.1	1958	1.7	41.30	H102	132MA4	22000
33.8	2057	1.7	28.73	H102	160M6	22000
33.1	2077	2.4	44.10	H122	132M4	30000
32.9	2091	2.4	44.10	H122	132MA4	30000
32.5	2138	2.5	29.86	H122	160M6	30000

5.1 H/HA GEARED MOTORS (50Hz)

7.50 kW

n2 [rpm]	M2 [Nm]	fs	i	Gear reducer	Motor	Fr2 [N]
31.9	2158	1.5	45.82	H102	132M4	22000
31.9	2111	2.4	45.77	H123	132M4	30000
31.7	2125	2.4	45.77	H123	132MA4	30000
31.6	2199	1.5	30.72	H102	160M6	22000
31.6	2173	1.5	45.82	H102	132MA4	22000
30.1	2308	3.6	32.24	H142	160M6	55000
29.4	2363	2.2	33.00	H122	160M6	30000
28.4	2449	1.4	34.20	H102	160M6	22000
28.3	2426	1.4	51.52	H102	132M4	22000
28.1	2443	1.4	51.52	H102	132MA4	22000
27.3	2468	3.2	53.53	H143	132M4	55000
27.1	2485	3.2	53.53	H143	132MA4	55000
26.8	2587	2.0	36.13	H122	160M6	30000
26.3	2558	1.4	55.47	H103	132M4	22000
26.1	2576	1.4	55.47	H103	132MA4	22000
26.1	2576	1.9	55.87	H123	132M4	30000
26.0	2594	1.9	55.87	H123	132MA4	30000
25.0	2781	3.0	38.85	H142	160M6	55000
24.7	2731	2.9	59.22	H143	132M4	55000
24.5	2750	2.9	59.22	H143	132MA4	55000
23.2	2905	2.8	62.99	H143	132M4	55000
23.0	2925	2.7	62.99	H143	132MA4	55000
22.5	3083	2.7	43.05	H142	160M6	55000
22.0	3157	1.7	44.10	H122	160M6	30000
21.7	3105	1.6	67.32	H123	132M4	30000
21.5	3126	1.6	67.32	H123	132MA4	30000
21.2	3209	1.6	45.77	H123	160M6	30000
20.5	3290	2.4	71.35	H143	132M4	55000
20.3	3313	2.4	71.35	H143	132MA4	55000
20.1	3389	2.5	48.35	H143	160M6	55000
19.8	3399	1.5	73.71	H123	132M4	30000
19.7	3423	1.5	73.71	H123	132MA4	30000
18.5	3646	2.2	79.07	H143	132M4	55000
18.3	3672	2.2	79.07	H143	132MA4	55000
18.1	3752	2.2	53.53	H143	160M6	55000
17.5	3843	1.3	83.34	H123	132M4	30000
17.4	3917	1.3	55.87	H123	160M6	30000
17.4	3869	1.3	83.34	H123	132MA4	30000
16.9	3986	2.0	86.43	H143	132M4	55000
16.8	4013	2.0	86.43	H143	132MA4	55000
16.4	4151	2.0	59.22	H143	160M6	55000
16.2	4149	1.2	89.97	H123	132M4	30000
16.1	4178	1.2	89.97	H123	132MA4	30000
15.4	4416	1.9	62.99	H143	160M6	55000
15.2	4437	1.8	96.21	H143	132M4	55000

5.1 H/HA GEARED MOTORS (50Hz)

7.50 kW

n2 [rpm]	M2 [Nm]	fs	i	Gear reducer	Motor	Fr2 [N]
15.1	4467	1.8	96.21	H143	132MA4	55000
14.0	4819	1.7	104.51	H143	132M4	55000
13.9	4853	1.6	104.51	H143	132MA4	55000
13.6	5002	1.7	71.35	H143	160M6	55000
12.6	5346	1.5	115.92	H143	132M4	55000
12.5	5382	1.5	115.92	H143	132MA4	55000
12.3	5543	1.5	79.07	H143	160M6	55000
11.4	5924	1.4	128.47	H143	132M4	55000
11.3	5965	1.3	128.47	H143	132MA4	55000
11.2	6059	1.4	86.43	H143	160M6	55000
10.5	6435	1.2	139.55	H143	132M4	55000
10.4	6480	1.2	139.55	H143	132MA4	55000
10.1	6744	1.2	96.21	H143	160M6	55000

9.20 kW

n2 [rpm]	M2 [Nm]	fs	i	Gear reducer	Motor	Fr2 [N]
1125.4	76	2.6	1.30	H081	132MB4	2791
1015.0	84	2.6	1.43	H081	132MB4	2865
756.1	113	2.0	1.93	H081	132MB4	3076
718.4	119	3.8	2.03	H101	132MB4	4125
584.3	146	3.8	2.48	H101	132MB4	4368
570.5	149	1.9	2.54	H081	132MB4	3272
446.2	191	1.6	3.25	H081	132MB4	3431
443.1	192	3.1	3.27	H101	132MB4	4703
391.9	217	2.8	3.70	H101	132MB4	4854
389.6	219	1.4	3.72	H081	132MB4	3511
362.5	235	1.4	4.00	H081	132MB4	3551
352.1	242	3.5	4.12	H121	132MB4	6000
343.4	248	2.5	4.22	H101	132MB4	5000
302.1	282	3.1	4.80	H121	132MB4	6000
297.4	287	2.2	4.88	H101	132MB4	5000
278.1	306	2.9	5.21	H121	132MB4	6000
275.3	310	2.0	5.27	H101	132MB4	5000
269.8	313	1.6	5.38	H062	132MB4	8789
269.1	313	2.2	5.39	H082	132MB4	11460
244.3	345	1.6	5.93	H062	132MB4	8952
243.9	346	2.0	5.95	H082	132MB4	11737
232.7	366	1.7	6.23	H101	132MB4	5000
232.0	367	2.5	6.25	H121	132MB4	6000
196.1	430	1.9	7.39	H082	132MB4	12346
192.2	443	1.5	7.55	H101	132MB4	5000
188.3	453	2.2	7.70	H121	132MB4	6000
180.8	467	1.7	8.02	H082	132MB4	12568

5.1 H/HA GEARED MOTORS (50Hz)

9.20 kW

n2 [rpm]	M2 [Nm]	fs	i	Gear reducer	Motor	Fr2 [N]
172.6	494	1.3	8.40	H101	132MB4	5000
163.8	515	1.7	8.85	H082	132MB4	12833
131.7	640	1.7	11.01	H082	132MB4	13392
108.8	775	4.0	13.32	H102	132MB4	20334
107.4	785	1.8	13.50	H082	132MB4	13866
97.3	866	1.7	14.90	H082	132MB4	14071
90.1	936	3.4	16.09	H102	132MB4	21219
87.3	967	1.6	16.62	H082	132MB4	14276
81.2	1038	3.1	17.85	H102	132MB4	21694
78.3	1078	1.4	18.53	H082	132MB4	14451
74.8	1128	1.4	19.38	H082	132MB4	14515
73.1	1155	2.8	19.85	H102	132MB4	22000
67.6	1247	2.6	21.44	H102	132MB4	22000
64.4	1310	3.8	22.52	H122	132MB4	30000
60.5	1394	2.4	23.97	H102	132MB4	22000
59.3	1423	3.5	24.47	H122	132MB4	30000
56.0	1506	2.2	25.89	H102	132MB4	22000
52.7	1599	3.1	27.49	H122	132MB4	30000
50.5	1671	2.0	28.73	H102	132MB4	22000
48.6	1737	2.9	29.86	H122	132MB4	30000
47.2	1787	1.8	30.72	H102	132MB4	22000
43.9	1920	2.6	33.00	H122	132MB4	30000
42.4	1989	1.6	34.20	H102	132MB4	22000
40.1	2102	2.4	36.13	H122	132MB4	30000
37.7	2237	1.3	38.45	H102	132MB4	22000
35.1	2402	1.4	41.30	H102	132MB4	22000
32.9	2565	1.9	44.10	H122	132MB4	30000
31.7	2607	1.9	45.77	H123	132MB4	30000
31.6	2665	1.2	45.82	H102	132MB4	22000
27.1	3049	2.6	53.53	H143	132MB4	55000
26.0	3182	1.6	55.87	H123	132MB4	30000
24.5	3373	2.4	59.22	H143	132MB4	55000
23.0	3588	2.2	62.99	H143	132MB4	55000
21.5	3835	1.3	67.32	H123	132MB4	30000
20.3	4064	2.0	71.35	H143	132MB4	55000
19.7	4198	1.2	73.71	H123	132MB4	30000
18.3	4504	1.8	79.07	H143	132MB4	55000
16.8	4923	1.6	86.43	H143	132MB4	55000
15.1	5480	1.5	96.21	H143	132MB4	55000
13.9	5953	1.3	104.51	H143	132MB4	55000
12.5	6603	1.2	115.92	H143	132MB4	55000

5.1 H/HA GEARED MOTORS (50Hz)

11.00 kW

n2 [rpm]	M2 [Nm]	fs	i	Gear reducer	Motor	Fr2 [N]
1008.0	101	2.2	1.43	H081	132MC4	2803
750.4	137	3.1	1.29	H101	160L6	4015
745.7	137	1.7	1.93	H081	132MC4	2995
725.8	140	3.2	2.03	H101	160MA4	4055
708.6	144	3.1	2.03	H101	132MC4	4081
708.6	144	3.1	2.03	H101	160S4	4081
687.8	150	3.2	1.41	H101	160L6	4110
594.4	171	3.2	2.48	H101	160MA4	4276
580.3	176	3.1	2.48	H101	132MC4	4303
580.3	176	3.1	2.48	H101	160S4	4303
566.6	180	1.6	2.54	H081	132MC4	3157
537.0	192	3.8	1.81	H121	160L6	5800
499.2	204	3.9	2.95	H121	160MA4	5924
487.4	209	3.8	2.95	H121	132MC4	5963
487.4	209	3.8	2.95	H121	160S4	5963
485.0	212	3.7	2.00	H121	160L6	5967
477.3	216	2.2	2.03	H101	160L6	4518
469.3	217	3.8	3.14	H121	160MA4	6000
458.2	222	3.7	3.14	H121	132MC4	6000
458.2	222	3.7	3.14	H121	160S4	6000
450.7	226	2.7	3.27	H101	160MA4	4588
443.1	230	1.3	3.25	H081	132MC4	3283
440.0	232	2.6	3.27	H101	132MC4	4615
440.0	232	2.6	3.27	H101	160S4	4615
412.1	247	3.4	3.58	H121	160MA4	6000
402.4	253	3.4	3.58	H121	132MC4	6000
402.4	253	3.4	3.58	H121	160S4	6000
398.6	256	2.3	3.70	H101	160MA4	4726
391.1	263	3.2	2.48	H121	160L6	6000
390.9	263	2.2	2.48	H101	160L6	4741
389.2	262	2.3	3.70	H101	132MC4	4753
389.2	262	2.3	3.70	H101	160S4	4753
386.9	263	1.2	3.72	H081	132MC4	3341
358.2	284	3.0	4.12	H121	160MA4	6000
349.7	291	2.9	4.12	H121	132MC4	6000
349.7	291	2.9	4.12	H121	160S4	6000
349.3	292	2.1	4.22	H101	160MA4	4873
341.1	299	2.0	4.22	H101	132MC4	4900
341.1	299	2.0	4.22	H101	160S4	4900
328.3	313	2.7	2.95	H121	160L6	6000
308.6	333	2.6	3.14	H121	160L6	6000
307.3	332	2.6	4.80	H121	160MA4	6000
302.6	337	1.8	4.88	H101	160MA4	5000
300.0	340	2.6	4.80	H121	132MC4	6000
300.0	340	2.6	4.80	H121	160S4	6000

5.1 H/HA GEARED MOTORS (50Hz)

11.00 kW

n2 [rpm]	M2 [Nm]	fs	i	Gear reducer	Motor	Fr2 [N]
296.4	347	1.8	3.27	H101	160L6	5000
295.4	345	1.8	4.88	H101	132MC4	5000
295.4	345	1.8	4.88	H101	160S4	5000
282.9	360	2.4	5.21	H121	160MA4	6000
280.1	364	1.7	5.27	H101	160MA4	5000
276.2	369	2.4	5.21	H121	132MC4	6000
276.2	369	2.4	5.21	H121	160S4	6000
273.7	368	1.9	5.39	H082	160MA4	11136
273.4	373	1.7	5.27	H101	132MC4	5000
273.4	373	1.7	5.27	H101	160S4	5000
271.0	380	2.4	3.58	H121	160L6	6000
267.2	377	1.9	5.39	H082	132MC4	11197
267.2	377	1.9	5.39	H082	160S4	11197
262.2	393	1.6	3.70	H101	160L6	5000
248.1	407	1.7	5.95	H082	160MA4	11385
242.2	416	1.7	5.95	H082	132MC4	11445
242.2	416	1.7	5.95	H082	160S4	11445
236.7	430	1.5	6.23	H101	160MA4	5000
236.0	432	2.1	6.25	H121	160MA4	6000
235.6	437	2.0	4.12	H121	160L6	6000
231.1	441	1.5	6.23	H101	132MC4	5000
231.1	441	1.5	6.23	H101	160S4	5000
230.4	442	2.0	6.25	H121	132MC4	6000
230.4	442	2.0	6.25	H121	160S4	6000
229.7	448	1.4	4.22	H101	160L6	5000
202.1	509	1.8	4.80	H121	160L6	6000
199.5	506	1.6	7.39	H082	160MA4	11920
199.0	517	1.3	4.88	H101	160L6	5000
195.5	521	1.2	7.55	H101	160MA4	5000
194.7	518	1.5	7.39	H082	132MC4	11977
194.7	518	1.5	7.39	H082	160S4	11977
191.6	532	1.9	7.70	H121	160MA4	6000
190.8	534	1.2	7.55	H101	132MC4	5000
190.8	534	1.2	7.55	H101	160S4	5000
187.0	545	1.8	7.70	H121	132MC4	6000
187.0	545	1.8	7.70	H121	160S4	6000
186.0	553	1.7	5.21	H121	160L6	6000
184.3	553	3.4	5.26	H102	160L6	17463
183.9	548	1.5	8.02	H082	160MA4	12111
179.5	562	1.4	8.02	H082	132MC4	12167
179.5	562	1.4	8.02	H082	160S4	12167
166.7	605	1.5	8.85	H082	160MA4	12334
162.7	620	1.5	8.85	H082	132MC4	12387
162.7	620	1.5	8.85	H082	160S4	12387
155.2	663	1.4	6.25	H121	160L6	6000

5.1 H/HA GEARED MOTORS (50Hz)

11.00 kW

n2 [rpm]	M2 [Nm]	fs	i	Gear reducer	Motor	Fr2 [N]
152.6	667	3.1	6.36	H102	160L6	18285
137.6	740	3.3	7.05	H102	160L6	18733
134.0	753	1.5	11.01	H082	160MA4	12787
133.1	758	4.0	11.09	H102	160MA4	18905
130.8	771	1.4	11.01	H082	132MC4	12832
130.8	771	1.4	11.01	H082	160S4	12832
129.9	776	3.9	11.09	H102	132MC4	19008
129.9	776	3.9	11.09	H102	160S4	19008
126.0	817	1.3	7.70	H121	160L6	6000
117.2	869	3.0	8.27	H102	160L6	19414
110.7	911	3.4	13.32	H102	160MA4	19688
109.3	923	1.5	13.50	H082	160MA4	13138
108.1	933	3.3	13.32	H102	132MC4	19788
108.1	933	3.3	13.32	H102	160S4	19788
106.7	945	1.5	13.50	H082	132MC4	13174
106.7	945	1.5	13.50	H082	160S4	13174
99.0	1018	1.5	14.90	H082	160MA4	13275
97.1	1049	2.8	9.99	H102	160L6	20189
96.7	1043	1.4	14.90	H082	132MC4	13304
96.7	1043	1.4	14.90	H082	160S4	13304
93.8	1086	3.9	10.35	H122	160L6	30000
91.7	1100	2.9	16.09	H102	160MA4	20457
89.5	1127	2.8	16.09	H102	132MC4	20552
89.5	1127	2.8	16.09	H102	160S4	20552
87.5	1164	2.7	11.09	H102	160L6	20596
82.6	1221	2.6	17.85	H102	160MA4	20859
80.7	1250	2.6	17.85	H102	132MC4	20950
80.7	1250	2.6	17.85	H102	160S4	20950
76.6	1330	3.5	12.66	H122	160L6	30000
76.3	1321	3.8	19.32	H122	160MA4	30000
74.5	1353	3.7	19.32	H122	132MC4	30000
74.5	1353	3.7	19.32	H122	160S4	30000
74.3	1357	2.4	19.85	H102	160MA4	21249
72.8	1399	2.3	13.32	H102	160L6	21270
72.6	1390	2.3	19.85	H102	132MC4	21334
72.6	1390	2.3	19.85	H102	160S4	21334
71.7	1406	3.6	20.57	H122	160MA4	30000
70.0	1456	3.3	13.86	H122	160L6	30000
70.0	1441	3.5	20.57	H122	132MC4	30000
70.0	1441	3.5	20.57	H122	160S4	30000
68.8	1466	2.2	21.44	H102	160MA4	21518
67.2	1502	2.1	21.44	H102	132MC4	21598
67.2	1502	2.1	21.44	H102	160S4	21598
65.5	1540	3.2	22.52	H122	160MA4	30000
63.9	1577	3.2	22.52	H122	132MC4	30000

5.1 H/HA GEARED MOTORS (50Hz)

11.00 kW

n2 [rpm]	M2 [Nm]	fs	i	Gear reducer	Motor	Fr2 [N]
63.9	1577	3.2	22.52	H122	160S4	30000
61.5	1639	2.0	23.97	H102	160MA4	21877
60.3	1690	2.0	16.09	H102	160L6	21876
60.3	1673	3.0	24.47	H122	160MA4	30000
60.1	1679	2.0	23.97	H102	132MC4	21949
60.1	1679	2.0	23.97	H102	160S4	21949
58.9	1714	2.9	24.47	H122	132MC4	30000
58.9	1714	2.9	24.47	H122	160S4	30000
57.3	1777	2.8	16.92	H122	160L6	30000
57.0	1770	1.9	25.89	H102	160MA4	22000
55.6	1813	1.8	25.89	H102	132MC4	22000
55.6	1813	1.8	25.89	H102	160S4	22000
54.3	1874	1.8	17.85	H102	160L6	22000
53.7	1880	2.7	27.49	H122	160MA4	30000
52.4	1925	2.6	27.49	H122	132MC4	30000
52.4	1925	2.6	27.49	H122	160S4	30000
51.3	1964	1.7	28.73	H102	160MA4	22000
50.2	2029	2.6	19.32	H122	160L6	30000
50.1	2012	1.6	28.73	H102	132MC4	22000
50.1	2012	1.6	28.73	H102	160S4	22000
49.4	2042	2.4	29.86	H122	160MA4	30000
48.9	2084	1.6	19.85	H102	160L6	22000
48.4	2105	4.0	20.04	H142	160L6	51787
48.2	2091	2.4	29.86	H122	132MC4	30000
48.2	2091	2.4	29.86	H122	160S4	30000
48.0	2100	1.5	30.72	H102	160MA4	22000
47.2	2160	2.4	20.57	H122	160L6	30000
46.9	2151	1.5	30.72	H102	132MC4	22000
46.9	2151	1.5	30.72	H102	160S4	22000
45.7	2204	3.6	32.24	H142	160MA4	52578
45.2	2252	1.5	21.44	H102	160L6	22000
44.7	2256	2.2	33.00	H122	160MA4	30000
44.7	2258	3.5	32.24	H142	160S4	52888
43.6	2311	2.2	33.00	H122	132MC4	30000
43.6	2311	2.2	33.00	H122	160S4	30000
43.1	2338	1.4	34.20	H102	160MA4	22000
43.1	2365	2.2	22.52	H122	160L6	30000
42.1	2395	1.3	34.20	H102	132MC4	22000
42.1	2395	1.3	34.20	H102	160S4	22000
40.8	2470	2.0	36.13	H122	160MA4	30000
40.2	2536	3.3	24.15	H142	160L6	54182
39.9	2530	2.0	36.13	H122	132MC4	30000
39.9	2530	2.0	36.13	H122	160S4	30000
39.6	2569	2.0	24.47	H122	160L6	30000
38.0	2656	3.0	38.85	H142	160MA4	54981

5.1 H/HA GEARED MOTORS (50Hz)

11.00 kW

n2 [rpm]	M2 [Nm]	fs	i	Gear reducer	Motor	Fr2 [N]
37.1	2721	2.9	38.85	H142	160S4	55000
36.2	2810	3.0	26.76	H142	160L6	55000
35.3	2887	1.8	27.49	H122	160L6	30000
34.3	2944	2.7	43.05	H142	160MA4	55000
33.4	3015	1.7	44.10	H122	160MA4	30000
33.4	3015	2.7	43.05	H142	160S4	55000
32.7	3088	1.6	44.10	H122	132MC4	30000
32.7	3088	1.6	44.10	H122	160S4	30000
32.5	3136	1.7	29.86	H122	160L6	30000
32.2	3064	1.6	45.77	H123	160MA4	30000
31.5	3139	1.6	45.77	H123	132MC4	30000
31.5	3139	1.6	45.77	H123	160S4	30000
30.5	3237	2.5	48.35	H143	160MA4	55000
30.1	3386	2.5	32.24	H142	160L6	55000
29.8	3315	2.4	48.35	H143	160S4	55000
29.4	3465	1.5	33.00	H122	160L6	30000
27.6	3583	2.2	53.53	H143	160MA4	55000
26.9	3671	2.2	53.53	H143	132MC4	55000
26.9	3671	2.2	53.53	H143	160S4	55000
26.8	3794	1.4	36.13	H122	160L6	30000
26.4	3740	1.3	55.87	H123	160MA4	30000
25.8	3831	1.3	55.87	H123	132MC4	30000
25.8	3831	1.3	55.87	H123	160S4	30000
25.0	4080	2.1	38.85	H142	160L6	55000
24.9	3964	2.0	59.22	H143	160MA4	55000
24.3	4061	2.0	59.22	H143	132MC4	55000
24.3	4061	2.0	59.22	H143	160S4	55000
23.4	4217	1.9	62.99	H143	160MA4	55000
22.9	4320	1.9	62.99	H143	132MC4	55000
22.9	4320	1.9	62.99	H143	160S4	55000
22.5	4521	1.9	43.05	H142	160L6	55000
20.7	4777	1.7	71.35	H143	160MA4	55000
20.2	4893	1.6	71.35	H143	132MC4	55000
20.2	4893	1.6	71.35	H143	160S4	55000
20.1	4971	1.7	48.35	H143	160L6	55000
18.7	5294	1.5	79.07	H143	160MA4	55000
18.2	5422	1.5	79.07	H143	132MC4	55000
18.2	5422	1.5	79.07	H143	160S4	55000
18.1	5504	1.5	53.53	H143	160L6	55000
17.1	5786	1.4	86.43	H143	160MA4	55000
16.7	5927	1.3	86.43	H143	132MC4	55000
16.7	5927	1.3	86.43	H143	160S4	55000
16.4	6089	1.4	59.22	H143	160L6	55000
15.4	6477	1.3	62.99	H143	160L6	55000
15.3	6441	1.2	96.21	H143	160MA4	55000

5.1 H/HA GEARED MOTORS (50Hz)

11.00 kW

n2 [rpm]	M2 [Nm]	fs	i	Gear reducer	Motor	Fr2 [N]
15.0	6597	1.2	96.21	H143	132MC4	55000
15.0	6597	1.2	96.21	H143	160S4	55000

15.00 kW

n2 [rpm]	M2 [Nm]	fs	i	Gear reducer	Motor	Fr2 [N]
1141.0	122	3.3	1.29	H101	160LA4	3490
1045.9	133	3.4	1.41	H101	160LA4	3573
796.3	176	3.9	1.23	H121	180L6	5075
758.1	185	2.3	1.29	H101	180L6	3878
737.5	188	4.0	2.00	H121	160LA4	5188
725.8	191	2.4	2.03	H101	160LA4	3925
694.9	202	2.3	1.41	H101	180L6	3962
691.8	203	3.6	1.42	H121	180L6	5275
594.8	234	3.4	2.48	H121	160LA4	5498
594.4	234	2.4	2.48	H101	160LA4	4117
542.5	259	2.8	1.81	H121	180L6	5626
499.2	278	2.9	2.95	H121	160LA4	5754
490.0	286	2.7	2.00	H121	180L6	5775
482.2	291	1.6	2.03	H101	180L6	4308
469.3	296	2.8	3.14	H121	160LA4	5845
450.7	308	1.9	3.27	H101	160LA4	4378
412.1	337	2.5	3.58	H121	160LA4	6000
398.6	349	1.7	3.70	H101	160LA4	4489
395.2	355	2.4	2.48	H121	180L6	6000
394.9	355	1.6	2.48	H101	180L6	4488
358.2	388	2.2	4.12	H121	160LA4	6000
349.3	398	1.5	4.22	H101	160LA4	4603
331.7	423	2.0	2.95	H121	180L6	6000
311.8	450	1.9	3.14	H121	180L6	6000
307.3	452	1.9	4.80	H121	160LA4	6000
302.6	459	1.4	4.88	H101	160LA4	4719
299.4	469	1.3	3.27	H101	180L6	4715
282.9	491	1.8	5.21	H121	160LA4	6000
280.3	491	3.7	5.26	H102	160LA4	15172
280.1	496	1.2	5.27	H101	160LA4	4777
273.8	513	1.7	3.58	H121	180L6	6000
273.7	502	1.4	5.39	H082	160LA4	10523
238.0	590	1.5	4.12	H121	180L6	6000
236.0	589	1.5	6.25	H121	160LA4	6000
232.1	593	3.4	6.36	H102	160LA4	15880
209.2	657	3.5	7.05	H102	160LA4	16266
204.2	687	1.3	4.80	H121	180L6	6000
191.6	725	1.4	7.70	H121	160LA4	6000

5.1 H/HA GEARED MOTORS (50Hz)

15.00 kW

n2 [rpm]	M2 [Nm]	fs	i	Gear reducer	Motor	Fr2 [N]
187.9	747	1.2	5.21	H121	180L6	6000
186.2	746	2.5	5.26	H102	180L6	16664
178.3	771	3.2	8.27	H102	160LA4	16850
154.2	901	2.3	6.36	H102	180L6	17329
147.6	932	3.0	9.99	H102	160LA4	17513
139.0	999	2.4	7.05	H102	180L6	17679
139.0	999	3.8	7.05	H122	180L6	27584
133.1	1034	2.9	11.09	H102	160LA4	17860
126.6	1097	3.5	7.74	H122	180L6	28236
118.4	1173	2.2	8.27	H102	180L6	18185
116.5	1181	3.7	12.66	H122	160LA4	28851
115.6	1201	3.3	8.48	H122	180L6	28865
110.7	1242	2.5	13.32	H102	160LA4	18432
106.4	1293	3.6	13.86	H122	160LA4	29482
98.1	1416	2.1	9.99	H102	180L6	18716
94.7	1466	2.9	10.35	H122	180L6	30000
91.7	1500	2.1	16.09	H102	160LA4	18941
88.4	1571	2.0	11.09	H102	180L6	18968
87.2	1578	3.0	16.92	H122	160LA4	30000
82.6	1664	1.9	17.85	H102	160LA4	19177
77.4	1795	2.6	12.66	H122	180L6	30000
76.3	1801	2.8	19.32	H122	160LA4	30000
74.3	1851	1.7	19.85	H102	160LA4	19379
73.5	1889	1.7	13.32	H102	180L6	19325
71.7	1918	2.6	20.57	H122	160LA4	30000
70.7	1965	2.5	13.86	H122	180L6	30000
68.8	1999	1.6	21.44	H102	160LA4	19497
65.5	2100	2.4	22.52	H122	160LA4	30000
62.2	2232	3.7	15.75	H142	180L6	46783
61.5	2235	1.5	23.97	H102	160LA4	19617
61.1	2252	3.6	24.15	H142	160LA4	47054
60.9	2281	1.5	16.09	H102	180L6	19540
60.3	2281	2.2	24.47	H122	160LA4	30000
57.9	2398	2.1	16.92	H122	180L6	30000
56.1	2474	3.4	17.45	H142	180L6	47904
55.1	2495	3.2	26.76	H142	160LA4	48180
53.7	2563	2.0	27.49	H122	160LA4	30000
50.7	2738	1.9	19.32	H122	180L6	30000
49.4	2784	1.8	29.86	H122	160LA4	30000
48.9	2841	3.0	20.04	H142	180L6	49389
47.6	2916	1.8	20.57	H122	180L6	30000
45.7	3006	2.7	32.24	H142	160LA4	50180
44.7	3077	1.6	33.00	H122	160LA4	30000
43.5	3192	1.6	22.52	H122	180L6	30000
40.8	3369	1.5	36.13	H122	160LA4	30000

5.1 H/HA GEARED MOTORS (50Hz)

15.00 kW

n2 [rpm]	M2 [Nm]	fs	i	Gear reducer	Motor	Fr2 [N]
40.6	3423	2.5	24.15	H142	180L6	51320
40.1	3468	1.5	24.47	H122	180L6	30000
38.0	3622	2.2	38.85	H142	160LA4	52091
36.6	3793	2.2	26.76	H142	180L6	52335
34.3	4014	2.0	43.05	H142	160LA4	53089
33.4	4112	1.2	44.10	H122	160LA4	30000
32.2	4179	1.2	45.77	H123	160LA4	30000
30.5	4414	1.8	48.35	H143	160LA4	54432
30.4	4570	1.8	32.24	H142	180L6	54049
27.6	4887	1.6	53.53	H143	160LA4	55000
25.2	5506	1.5	38.85	H142	180L6	55000
24.9	5406	1.5	59.22	H143	160LA4	55000
23.4	5751	1.4	62.99	H143	160LA4	55000
22.8	6102	1.4	43.05	H142	180L6	55000
20.7	6514	1.2	71.35	H143	160LA4	55000
20.3	6709	1.3	48.35	H143	180L6	55000

18.50 kW

n2 [rpm]	M2 [Nm]	fs	i	Gear reducer	Motor	Fr2 [N]
1137.2	151	2.7	1.29	H101	180M4	3421
1042.4	164	2.7	1.41	H101	180M4	3497
813.8	211	3.3	1.81	H121	180M4	4958
796.3	217	3.1	1.23	H121	200LA6	4981
735.0	233	3.2	2.00	H121	180M4	5092
723.3	237	1.9	2.03	H101	180M4	3814
691.8	250	2.9	1.42	H121	200LA6	5166
592.7	289	2.8	2.48	H121	180M4	5378
592.4	289	1.9	2.48	H101	180M4	3981
542.5	319	2.3	1.81	H121	200LA6	5488
497.5	344	2.3	2.95	H121	180M4	5610
490.0	353	2.2	2.00	H121	200LA6	5623
467.7	366	2.2	3.14	H121	180M4	5692
449.2	382	1.6	3.27	H101	180M4	4197
410.7	417	2.0	3.58	H121	180M4	5862
397.3	431	1.4	3.70	H101	180M4	4284
395.2	438	1.9	2.48	H121	200LA6	5902
357.0	480	1.8	4.12	H121	180M4	6000
348.2	492	1.2	4.22	H101	180M4	4369
331.7	522	1.6	2.95	H121	200LA6	6000
311.8	555	1.6	3.14	H121	200LA6	6000
306.3	560	1.6	4.80	H121	180M4	6000
281.9	608	1.4	5.21	H121	180M4	6000
279.3	607	3.0	5.26	H102	180M4	14749

5.1 H/HA GEARED MOTORS (50Hz)

18.50 kW

n2 [rpm]	M2 [Nm]	fs	i	Gear reducer	Motor	Fr2 [N]
273.8	632	1.4	3.58	H121	200LA6	6000
235.2	729	1.2	6.25	H121	180M4	6000
231.3	733	2.7	6.36	H102	180M4	15366
208.5	814	2.8	7.05	H102	180M4	15695
185.8	922	3.4	5.27	H122	200LA6	25022
177.7	955	2.6	8.27	H102	180M4	16178
173.4	978	3.9	8.48	H122	180M4	25485
169.7	1009	3.3	5.78	H122	200LA6	25590
147.1	1153	2.4	9.99	H102	180M4	16698
142.1	1194	3.4	10.35	H122	180M4	26737
139.0	1232	3.1	7.05	H122	200LA6	26833
132.6	1279	2.3	11.09	H102	180M4	16954
126.6	1353	2.9	7.74	H122	200LA6	27411
116.1	1461	3.0	12.66	H122	180M4	27985
115.6	1482	2.7	8.48	H122	200LA6	27962
110.3	1537	2.0	13.32	H102	180M4	17339
106.0	1600	2.9	13.86	H122	180M4	28531
94.7	1808	2.3	10.35	H122	200LA6	29135
91.4	1857	1.7	16.09	H102	180M4	17617
86.9	1952	2.5	16.92	H122	180M4	29684
84.2	2014	3.9	17.45	H142	180M4	42354
82.3	2060	1.6	17.85	H102	180M4	17707
77.4	2213	2.1	12.66	H122	200LA6	30000
76.1	2229	2.2	19.32	H122	180M4	30000
75.0	2285	3.4	13.07	H142	200LA6	43436
74.1	2290	1.4	19.85	H102	180M4	17742
73.3	2313	3.5	20.04	H142	180M4	43719
71.5	2374	2.1	20.57	H122	180M4	30000
70.7	2423	2.0	13.86	H122	200LA6	30000
65.3	2599	1.9	22.52	H122	180M4	30000
62.2	2753	3.0	15.75	H142	200LA6	45225
60.9	2786	2.9	24.15	H142	180M4	45514
60.1	2823	1.8	24.47	H122	180M4	30000
57.9	2958	1.7	16.92	H122	200LA6	30000
56.1	3051	2.7	17.45	H142	200LA6	46178
54.9	3088	2.6	26.76	H142	180M4	46470
53.5	3172	1.6	27.49	H122	180M4	30000
50.7	3377	1.6	19.32	H122	200LA6	30000
49.2	3446	1.5	29.86	H122	180M4	30000
48.9	3503	2.4	20.04	H142	200LA6	47406
47.6	3596	1.5	20.57	H122	200LA6	30000
45.6	3720	2.2	32.24	H142	180M4	48110
44.5	3808	1.3	33.00	H122	180M4	30000
40.7	4169	1.2	36.13	H122	180M4	30000
40.6	4221	2.0	24.15	H142	200LA6	48931

5.1 H/HA GEARED MOTORS (50Hz)

18.50 kW

n2 [rpm]	M2 [Nm]	fs	i	Gear reducer	Motor	Fr2 [N]
37.8	4482	1.8	38.85	H142	180M4	49588
36.6	4678	1.8	26.76	H142	200LA6	49688
34.1	4968	1.6	43.05	H142	180M4	50309
30.4	5636	1.5	32.24	H142	200LA6	50859
30.4	5462	1.5	48.35	H143	180M4	51372
27.5	6047	1.3	53.53	H143	180M4	51934
25.2	6791	1.2	38.85	H142	200LA6	51701
24.8	6690	1.2	59.22	H143	180M4	52385

22.00 kW

n2 [rpm]	M2 [Nm]	fs	i	Gear reducer	Motor	Fr2 [N]
1042.4	196	2.3	1.41	H101	180L4	3417
813.8	250	2.8	1.81	H121	180L4	4866
735.0	277	2.7	2.00	H121	180L4	4991
723.3	282	1.6	2.03	H101	180L4	3699
592.7	344	2.3	2.48	H121	180L4	5253
592.4	344	1.6	2.48	H101	180L4	3842
542.5	379	1.9	1.81	H121	200LB6	5351
497.5	410	2.0	2.95	H121	180L4	5462
490.0	420	1.9	2.00	H121	200LB6	5470
467.7	436	1.9	3.14	H121	180L4	5534
449.2	454	1.3	3.27	H101	180L4	4013
410.7	496	1.7	3.58	H121	180L4	5682
395.2	521	1.6	2.48	H121	200LB6	5713
357.0	571	1.5	4.12	H121	180L4	5834
331.7	621	1.4	2.95	H121	200LB6	5896
311.8	660	1.3	3.14	H121	200LB6	5956
306.3	665	1.3	4.80	H121	180L4	5988
281.9	723	1.2	5.21	H121	180L4	6000
279.3	722	2.5	5.26	H102	180L4	14314
231.3	872	2.3	6.36	H102	180L4	14840
208.5	967	2.4	7.05	H102	180L4	15111
208.5	967	3.7	7.05	H122	180L4	23829
189.9	1062	3.5	7.74	H122	180L4	24370
185.8	1096	2.9	5.27	H122	200LB6	24460
177.7	1135	2.2	8.27	H102	180L4	15493
173.4	1163	3.3	8.48	H122	180L4	24889
169.7	1200	2.8	5.78	H122	200LB6	24975
154.2	1321	3.9	6.36	H142	200LB6	35673
147.1	1371	2.0	9.99	H102	180L4	15871
142.1	1420	2.8	10.35	H122	180L4	26010
139.1	1464	3.6	7.04	H142	200LB6	36612
139.0	1465	2.6	7.05	H122	200LB6	26082

5.1 H/HA GEARED MOTORS (50Hz)

22.00 kW

n2 [rpm]	M2 [Nm]	fs	i	Gear reducer	Motor	Fr2 [N]
132.6	1521	2.0	11.09	H102	180L4	16037
126.6	1609	2.4	7.74	H122	200LB6	26587
125.0	1630	3.4	7.84	H142	200LB6	37596
116.1	1737	2.5	12.66	H122	180L4	27094
115.6	1762	2.3	8.48	H122	200LB6	27059
110.3	1828	1.7	13.32	H102	180L4	16237
106.0	1902	2.4	13.86	H122	180L4	27556
103.7	1964	3.5	9.45	H142	200LB6	39291
94.7	2151	2.0	10.35	H122	200LB6	28033
93.6	2177	3.5	10.47	H142	200LB6	40213
93.3	2161	3.6	15.75	H142	180L4	40301
91.4	2208	1.4	16.09	H102	180L4	16286
86.9	2322	2.1	16.92	H122	180L4	28494
84.2	2395	3.3	17.45	H142	180L4	41214
77.4	2632	1.8	12.66	H122	200LB6	28893
76.1	2651	1.9	19.32	H122	180L4	29043
75.0	2717	2.8	13.07	H142	200LB6	42143
73.3	2750	2.9	20.04	H142	180L4	42410
71.5	2823	1.8	20.57	H122	180L4	29276
70.7	2882	1.7	13.86	H122	200LB6	29223
65.3	3090	1.6	22.52	H122	180L4	29579
62.2	3274	2.5	15.75	H142	200LB6	43667
60.9	3314	2.4	24.15	H142	180L4	43937
60.1	3357	1.5	24.47	H122	180L4	29815
56.1	3628	2.3	17.45	H142	200LB6	44451
54.9	3672	2.2	26.76	H142	180L4	44722
48.9	4166	2.0	20.04	H142	200LB6	45423
45.6	4424	1.8	32.24	H142	180L4	46004
40.6	5020	1.7	24.15	H142	200LB6	46542
37.8	5331	1.5	38.85	H142	180L4	47051
36.6	5563	1.5	26.76	H142	200LB6	47040
34.1	5907	1.4	43.05	H142	180L4	47498
30.4	6702	1.3	32.24	H142	200LB6	47669
30.4	6495	1.2	48.35	H143	180L4	48280

30.00 kW

n2 [rpm]	M2 [Nm]	fs	i	Gear reducer	Motor	Fr2 [N]
737.5	377	2.0	2.00	H121	200L4	4757
594.8	467	1.7	2.48	H121	200L4	4964
499.2	557	1.4	2.95	H121	200L4	5119
469.3	592	1.4	3.14	H121	200L4	5169
412.1	674	1.3	3.58	H121	200L4	5267
279.6	984	3.1	5.27	H122	200L4	21290

5.1 H/HA GEARED MOTORS (50Hz)

30.00 kW

n2 [rpm]	M2 [Nm]	fs	i	Gear reducer	Motor	Fr2 [N]
255.4	1077	3.0	5.78	H122	200L4	21732
209.4	1313	3.8	7.04	H142	200L4	31889
209.3	1314	2.7	7.05	H122	200L4	22681
190.5	1444	2.6	7.74	H122	200L4	23110
188.1	1462	3.6	7.84	H142	200L4	32737
174.0	1581	2.4	8.48	H122	200L4	23512
156.1	1762	3.7	9.45	H142	200L4	34195
142.6	1929	2.1	10.35	H122	200L4	24334
140.8	1953	3.7	10.47	H142	200L4	34986
116.5	2361	1.9	12.66	H122	200L4	25049
112.8	2437	3.0	13.07	H142	200L4	36635
106.4	2585	1.8	13.86	H122	200L4	25319
93.7	2937	2.7	15.75	H142	200L4	37927
87.2	3155	1.5	16.92	H122	200L4	25769
84.5	3255	2.4	17.45	H142	200L4	38588
76.3	3603	1.4	19.32	H122	200L4	25936
73.6	3737	2.1	20.04	H142	200L4	39400
61.1	4503	1.8	24.15	H142	200L4	40318
55.1	4991	1.6	26.76	H142	200L4	40715
45.7	6012	1.3	32.24	H142	200L4	41186

37.00 kW

n2 [rpm]	M2 [Nm]	fs	i	Gear reducer	Motor	Fr2 [N]
281.5	1205	3.8	5.27	H142	225S4	28881
233.7	1452	3.4	6.36	H142	225S4	30204
210.8	1609	3.1	7.04	H142	225S4	30925
189.3	1792	3.0	7.84	H142	225S4	31670
157.1	2159	3.0	9.45	H142	225S4	32921
141.8	2392	3.0	10.47	H142	225S4	33580
113.6	2986	2.4	13.07	H142	225S4	34896
94.3	3598	2.2	15.75	H142	225S4	35846
85.1	3987	2.0	17.45	H142	225S4	36289
74.1	4578	1.7	20.04	H142	225S4	36771
61.5	5517	1.5	24.15	H142	225S4	37167

45.00 kW

n2 [rpm]	M2 [Nm]	fs	i	Gear reducer	Motor	Fr2 [N]
281.5	1465	3.1	5.27	H142	225M4	28102
233.7	1766	2.8	6.36	H142	225M4	29265
210.8	1957	2.6	7.04	H142	225M4	29884
189.3	2179	2.4	7.84	H142	225M4	30511

5.1 H/HA GEARED MOTORS (50Hz)

45.00 kW

n2 [rpm]	M2 [Nm]	fs	i	Gear reducer	Motor	Fr2 [N]
157.1	2625	2.5	9.45	H142	225M4	31525
141.8	2910	2.5	10.47	H142	225M4	32033
113.6	3631	2.0	13.07	H142	225M4	32964
94.3	4376	1.8	15.75	H142	225M4	33519

5.2 IH/IHA GEAR REDUCER - 1750 RPM

IHA32

Mn_2 [Nm]	i	Pn_1 [kW]	n2 [rpm]	Fr1 [N]	Fr2 [N]
58	5.38	2.06	325.3	330	1018
58	6.52	1.70	268.5	409	1085
54	8.11	1.27	215.8	373	1167
65	10.94	1.13	160.0	441	1289
58	13.25	0.84	132.1	363	1374
58	16.49	0.67	106.1	398	1478
65	20.26	0.61	86.4	453	1583
61	24.55	0.47	71.3	386	1688
68	30.55	0.42	57.3	374	1816
77	35.44	0.41	49.4	480	1908
77	44.10	0.33	39.7	398	2000
68	48.75	0.27	35.9	398	2000
81	60.67	0.25	28.9	472	2000

IHA33

Mn_2 [Nm]	i	Pn_1 [kW]	n2 [rpm]	Fr1 [N]	Fr2 [N]
84	51.32	0.32	34.1	472	2000
85	59.65	0.28	29.3	472	2000
87	72.27	0.23	24.2	472	2000
84	89.94	0.18	19.5	472	2000
85	110.51	0.15	15.8	472	2000
88	133.88	0.13	13.1	472	2000
82	166.61	0.10	10.5	472	2000
85	193.30	0.09	9.1	472	2000
79	240.55	0.06	7.3	472	2000
92	279.07	0.06	6.3	472	2000
76	347.29	0.04	5.0	472	2000

IHA41

Mn_2 [Nm]	i	Pn_1 [kW]	n2 [rpm]	Fr1 [N]	Fr2 [N]
21	1.45	2.74	1208.3	330	475
21	2.94	1.35	594.3	330	602
26	4.75	1.03	368.4	330	706
26	5.45	0.90	320.8	330	739
21	7.88	0.50	222.2	330	835
17	10.83	0.30	161.5	330	929

5.2 IH/IHA GEAR REDUCER - 1750 RPM

IHA42

Mn_2 [Nm]	i	Pn_1 [kW]	n2 [rpm]	Fr1 [N]	Fr2 [N]
101	5.38	3.58	325.3	330	2143
101	6.52	2.96	268.5	409	2284
94	8.11	2.21	215.8	369	2457
108	10.94	1.88	160.0	424	2714
101	13.25	1.46	132.1	381	2894
101	16.49	1.17	106.1	398	3112
108	20.26	1.02	86.4	432	3334
112	24.55	0.87	71.3	422	3554
120	30.55	0.75	57.3	359	3823
128	35.44	0.69	49.4	457	4017
120	44.10	0.52	39.7	371	4300
111	48.75	0.43	35.9	416	4300
120	60.67	0.38	28.9	428	4300

IHA43

Mn_2 [Nm]	i	Pn_1 [kW]	n2 [rpm]	Fr1 [N]	Fr2 [N]
129	51.32	0.49	34.1	427	4300
127	59.65	0.42	29.3	426	4300
127	72.27	0.34	24.2	409	4300
128	89.94	0.28	19.5	398	4300
127	110.51	0.22	15.8	403	4300
125	133.88	0.18	13.1	409	4300
128	166.61	0.15	10.5	398	4300
127	193.30	0.13	9.1	427	4300
132	240.55	0.11	7.3	398	4300
122	279.07	0.09	6.3	427	4300
133	347.29	0.07	5.0	398	4300

IHA51

Mn_2 [Nm]	i	Pn_1 [kW]	n2 [rpm]	Fr1 [N]	Fr2 [N]
34	1.45	4.43	1208.3	330	1309
34	2.94	2.18	594.3	330	1658
43	4.75	1.71	368.4	330	1945
43	5.45	1.49	320.8	330	2036
34	7.88	0.82	222.2	330	2302
21	10.83	0.37	161.5	330	2560

5.2 IH/IHA GEAR REDUCER - 1750 RPM

IHA52

Mn_2 [Nm]	i	Pn_1 [kW]	n2 [rpm]	Fr1 [N]	Fr2 [N]
173	5.14	6.42	340.3	550	2638
173	6.22	5.31	281.2	682	2811
173	7.73	4.27	226.3	664	3023
216	9.64	4.28	181.5	827	3253
202	11.67	3.30	150.0	636	3467
202	14.50	2.66	120.7	664	3727
216	16.91	2.44	103.5	758	3924
208	20.46	1.94	85.5	659	4181
202	25.43	1.52	68.8	641	4495
216	29.89	1.38	58.5	752	4744
256	36.17	1.35	48.4	682	5055
238	44.95	1.01	38.9	620	5435
256	49.78	0.98	35.2	798	5623
246	61.87	0.76	28.3	642	6000

IHA53

Mn_2 [Nm]	i	Pn_1 [kW]	n2 [rpm]	Fr1 [N]	Fr2 [N]
256	49.80	1.00	35.1	330	5624
256	60.25	0.83	29.1	409	5992
254	74.88	0.66	23.4	398	6000
254	88.02	0.56	19.9	421	6000
256	111.61	0.45	15.7	390	6000
258	138.71	0.36	12.6	398	6000
258	163.05	0.31	10.7	421	6000
252	200.27	0.25	8.7	403	6000
256	235.41	0.21	7.4	421	6000
248	284.81	0.17	6.1	409	6000
252	353.98	0.14	4.9	398	6000

IHA61

Mn_2 [Nm]	i	Pn_1 [kW]	n2 [rpm]	Fr1 [N]	Fr2 [N]
77	1.33	10.91	1312.5	550	1906
77	2.50	5.82	700.0	550	2350
94	4.38	4.05	399.1	550	2834
77	7.75	1.88	225.8	550	3426
60	10.67	1.06	164.1	550	3811

5.2 IH/IHA GEAR REDUCER - 1750 RPM

IHA62

Mn_2 [Nm]	i	Pn_1 [kW]	n2 [rpm]	Fr1 [N]	Fr2 [N]
274	5.14	10.17	340.3	550	3894
274	6.22	8.41	281.2	682	4150
274	7.73	6.76	226.3	664	4462
332	9.64	6.57	181.5	801	4802
318	11.67	5.20	150.0	652	5117
302	14.50	3.98	120.7	634	5502
360	16.91	4.06	103.5	842	5791
332	20.46	3.10	85.5	627	6171
310	25.43	2.33	68.8	621	6635
324	29.89	2.07	58.5	734	7002
400	36.17	2.11	48.4	712	7461
376	44.95	1.60	38.9	621	8000
316	49.78	1.21	35.2	626	8000
376	61.87	1.16	28.3	789	8000

IHA63

Mn_2 [Nm]	i	Pn_1 [kW]	n2 [rpm]	Fr1 [N]	Fr2 [N]
408	49.80	1.60	35.1	330	8000
408	60.25	1.32	29.1	409	8000
410	74.88	1.07	23.4	398	8000
408	88.02	0.90	19.9	421	8000
408	111.61	0.71	15.7	390	8000
410	138.71	0.58	12.6	398	8000
410	163.05	0.49	10.7	421	8000
406	200.27	0.40	8.7	403	8000
412	235.41	0.34	7.4	421	8000
404	284.81	0.28	6.1	409	8000
406	353.98	0.22	4.9	398	8000

IH032

Mn_2 [Nm]	i	Pn_1 [kW]	n2 [rpm]	Fr1 [N]	Fr2 [N]
69	4.70	2.80	372.7	742	2769
76	6.23	2.33	280.9	852	3037
90	7.76	2.21	225.4	877	3151
94	8.87	2.02	197.4	924	3300
101	10.14	1.90	172.5	952	3412
105	11.76	1.70	148.8	1001	3605
123	13.72	1.71	127.5	999	3625
123	14.66	1.60	119.4	1024	3743
137	16.77	1.56	104.4	1033	3795
145	18.20	1.52	96.2	1044	3854

5.2 IH/IHA GEAR REDUCER - 1750 RPM

IH032

Mn_2 [Nm]	i	Pn_1 [kW]	n2 [rpm]	Fr1 [N]	Fr2 [N]
145	19.90	1.39	88.0	1075	4029
145	22.68	1.22	77.2	1115	4296
145	23.83	1.16	73.4	1129	4400
145	26.39	1.05	66.3	1156	4620
146	29.70	0.94	58.9	1184	4884
171	32.89	0.99	53.2	1205	5120
171	37.92	0.86	46.1	1231	5464
171	41.40	0.79	42.3	1246	5500
171	47.25	0.69	37.0	1265	5500

IH033

Mn_2 [Nm]	i	Pn_1 [kW]	n2 [rpm]	Fr1 [N]	Fr2 [N]
170	53.59	0.62	32.7	1282	5500
172	66.78	0.50	26.2	1306	5500
172	74.84	0.45	23.4	1316	5500
169	99.27	0.33	17.6	1338	5500
172	108.05	0.31	16.2	1343	5500
169	123.71	0.27	14.2	1351	5500
173	143.33	0.24	12.2	1358	5500
166	178.61	0.18	9.8	1367	5500
173	197.17	0.17	8.9	1371	5500
175	245.70	0.14	7.1	1377	5500

IH041

Mn_2 [Nm]	i	Pn_1 [kW]	n2 [rpm]	Fr1 [N]	Fr2 [N]
21	1.44	2.76	1217.4	1018	549
21	2.00	1.98	875.0	1117	625
26	2.55	1.93	687.5	1131	665
26	2.71	1.81	644.7	1146	682
34	3.11	2.07	563.6	1109	676
38	3.59	2.00	487.7	1116	696
38	4.20	1.71	416.7	1153	744
38	5.00	1.44	350.0	1188	800
43	5.50	1.48	318.2	1186	810
43	6.09	1.33	287.3	1204	846
43	7.67	1.06	228.3	1238	931
47	8.75	1.01	200.0	1243	961

5.2 IH/IHA GEAR REDUCER - 1750 RPM

IH042

Mn_2 [Nm]	i	Pn_1 [kW]	n2 [rpm]	Fr1 [N]	Fr2 [N]
116	5.46	4.05	320.4	494	3589
116	7.19	3.08	243.5	718	4052
152	8.91	3.26	196.3	676	4056
173	10.31	3.20	169.7	686	4106
181	11.80	2.93	148.3	752	4303
181	13.57	2.55	128.9	841	4601
181	15.96	2.16	109.7	929	4965
181	19.00	1.82	92.1	1009	5379
181	21.00	1.65	83.3	1049	5627
188	23.15	1.55	75.6	1070	5799
188	26.04	1.38	67.2	1110	6112
202	27.50	1.40	63.6	1104	6106
238	30.45	1.49	57.5	1135	6393
238	34.10	1.33	51.3	1166	6600
238	37.76	1.20	46.3	1192	6600
238	43.75	1.04	40.0	1224	6600
238	47.53	0.96	36.8	1240	6600
238	54.25	0.84	32.3	1264	6600

IH043

Mn_2 [Nm]	i	Pn_1 [kW]	n2 [rpm]	Fr1 [N]	Fr2 [N]
256	61.83	0.81	28.3	1274	6600
256	76.67	0.65	22.8	1304	6600
256	87.05	0.57	20.1	1319	6600
256	114.55	0.44	15.3	1345	6600
256	125.69	0.40	13.9	1352	6600
256	142.04	0.35	12.3	1361	6600
256	165.38	0.30	10.6	1371	6600
256	205.07	0.24	8.5	1382	6600
256	227.50	0.22	7.7	1386	6600
256	282.10	0.18	6.2	1395	6600

IH051

Mn_2 [Nm]	i	Pn_1 [kW]	n2 [rpm]	Fr1 [N]	Fr2 [N]
34	1.27	5.05	1375.0	860	1374
51	1.42	6.79	1233.0	675	1350
51	2.13	4.53	823.5	914	1579
60	2.57	4.41	680.6	931	1658
68	3.17	4.06	552.6	964	1757
77	3.69	3.94	474.6	979	1825
77	4.00	3.64	437.5	1011	1885

5.2 IH/IHA GEAR REDUCER - 1750 RPM

IH051

Mn_2 [Nm]	i	Pn_1 [kW]	n2 [rpm]	Fr1 [N]	Fr2 [N]
81	4.77	3.21	366.9	1055	2001
85	5.25	3.06	333.3	1070	2058
85	5.82	2.76	300.8	1101	2144
85	7.33	2.19	238.6	1162	2349
86	8.38	1.94	209.0	1191	2473

IH052

Mn_2 [Nm]	i	Pn_1 [kW]	n2 [rpm]	Fr1 [N]	Fr2 [N]
188	5.73	6.27	305.6	328	4443
208	6.89	5.76	253.8	406	4642
241	8.53	5.40	205.2	458	4802
266	9.56	5.31	183.0	486	4884
280	11.51	4.64	152.0	599	5218
310	14.24	4.16	122.9	686	5530
324	16.59	3.73	105.5	759	5835
332	18.00	3.52	97.2	796	6011
332	19.97	3.17	87.6	855	6325
338	21.67	2.98	80.8	887	6515
338	24.71	2.61	70.8	950	6939
354	26.18	2.58	66.8	957	7006
354	28.44	2.38	61.5	992	7288
418	31.52	2.53	55.5	1032	7649
418	33.00	2.42	53.0	1048	7815
418	38.98	2.05	44.9	1102	8000
418	45.36	1.76	38.6	1144	8000
418	49.13	1.62	35.6	1163	8000
418	56.11	1.42	31.2	1192	8000

IH053

Mn_2 [Nm]	i	Pn_1 [kW]	n2 [rpm]	Fr1 [N]	Fr2 [N]
428	58.81	1.42	29.8	1198	8000
426	72.75	1.14	24.1	1236	8000
426	90.51	0.92	19.3	1268	8000
428	108.95	0.77	16.1	1290	8000
428	134.76	0.62	13.0	1311	8000
430	157.29	0.53	11.1	1323	8000
426	194.56	0.43	9.0	1338	8000
426	216.38	0.38	8.1	1344	8000
424	267.65	0.31	6.5	1354	8000

5.2 IH/IHA GEAR REDUCER - 1750 RPM

IH061

Mn_2 [Nm]	i	Pn_1 [kW]	n2 [rpm]	Fr1 [N]	Fr2 [N]
53	1.34	7.40	1302.3	2147	2040
103	2.13	9.16	823.5	2190	2234
102	2.57	7.49	680.6	2326	2423
111	3.17	6.62	552.6	2404	2590
128	3.69	6.56	474.6	2410	2654
128	4.00	6.05	437.5	2454	2749
137	4.77	5.43	366.9	2509	2910
145	5.25	5.22	333.3	2525	2979
145	5.82	4.71	300.8	2569	3114
145	7.33	3.74	238.6	2653	3437
145	8.38	3.27	209.0	2693	3633

IH062

Mn_2 [Nm]	i	Pn_1 [kW]	n2 [rpm]	Fr1 [N]	Fr2 [N]
324	5.38	11.50	325.6	972	7181
342	5.93	11.00	294.9	979	7240
364	7.39	9.40	236.8	1346	8018
432	8.50	9.70	205.9	1423	8270
434	9.39	8.83	186.5	1557	8658
470	11.69	7.68	149.7	1724	9291
505	12.67	7.61	138.2	1731	9366
505	14.75	6.54	118.6	1888	10053
575	16.29	6.74	107.5	1854	9972
600	17.67	6.48	99.1	1897	10202
610	20.28	5.74	86.3	1999	10787
610	23.27	5.00	75.2	2108	11512
610	25.70	4.53	68.1	2177	12000
576	29.33	3.75	59.7	2293	12000
725	32.00	4.32	54.7	2308	12000
680	36.99	3.51	47.3	2407	12000
725	40.33	3.43	43.4	2418	12000
725	46.06	3.00	38.0	2471	12000

IH063

Mn_2 [Nm]	i	Pn_1 [kW]	n2 [rpm]	Fr1 [N]	Fr2 [N]
725	49.45	2.86	35.4	2496	12000
725	54.61	2.59	32.0	2529	12000
725	68.00	2.08	25.7	2590	12000
720	85.82	1.64	20.4	2643	12000
725	94.76	1.49	18.5	2661	12000
720	118.00	1.19	14.8	2697	12000

5.2 IH/IHA GEAR REDUCER - 1750 RPM

IH063

Mn_2 [Nm]	i	Pn_1 [kW]	n2 [rpm]	Fr1 [N]	Fr2 [N]
725	135.40	1.04	12.9	2715	12000
725	149.51	0.95	11.7	2727	12000
725	170.67	0.83	10.2	2742	12000
720	186.18	0.75	9.4	2750	12000
730	215.21	0.66	8.1	2762	12000
720	234.67	0.60	7.5	2769	12000
715	268.00	0.52	6.5	2778	12000

IH081

Mn_2 [Nm]	i	Pn_1 [kW]	n2 [rpm]	Fr1 [N]	Fr2 [N]
73	1.30	10.60	1349.0	1049	2140
98	1.43	12.90	1225.0	1052	2159
166	1.93	16.20	906.2	1502	2437
238	2.54	17.69	688.5	1617	2565
264	3.25	15.35	538.5	1808	2761
264	3.72	13.40	470.1	1964	2943
272	4.00	12.85	437.5	2007	3005
272	4.67	11.01	375.0	2154	3228
282	5.54	9.62	316.0	2270	3451
290	6.08	9.01	287.7	2318	3562
298	7.50	7.51	233.3	2437	3875
298	8.44	6.67	207.2	2504	4000

IH082

Mn_2 [Nm]	i	Pn_1 [kW]	n2 [rpm]	Fr1 [N]	Fr2 [N]
491	5.39	17.40	324.8	947	9019
505	5.95	16.21	294.3	1140	9420
558	7.39	14.40	236.7	1292	9927
575	8.02	13.68	218.2	1426	10294
650	8.85	14.02	197.7	1395	10322
795	11.01	13.79	159.0	1423	10532
1010	13.50	14.28	129.6	1363	10317
1080	14.90	13.84	117.5	1410	10432
1080	16.62	12.41	105.3	1576	11058
1080	18.53	11.13	94.5	1723	11705
1155	19.38	11.37	90.3	1699	11551
1155	21.39	10.31	81.8	1821	12166
1155	22.80	9.67	76.8	1895	12576
1155	26.60	8.29	65.8	2054	13601
1155	27.88	7.91	62.8	2098	13925
1365	31.15	8.36	56.2	2193	14709

5.2 IH/IHA GEAR REDUCER - 1750 RPM

IH082

Mn_2 [Nm]	i	Pn_1 [kW]	n2 [rpm]	Fr1 [N]	Fr2 [N]
1365	34.38	7.58	50.9	2270	15429
1365	38.70	6.73	45.2	2352	16329
1365	42.75	6.09	40.9	2414	17111
1365	48.13	5.41	36.4	2481	18000

IH083

Mn_2 [Nm]	i	Pn_1 [kW]	n2 [rpm]	Fr1 [N]	Fr2 [N]
1365	56.53	4.71	31.0	2559	18000
1535	71.48	4.19	24.5	2609	18000
1535	78.87	3.79	22.2	2646	18000
1535	85.56	3.50	20.4	2674	18000
1535	98.09	3.05	17.8	2717	18000
1535	112.78	2.65	15.5	2755	18000
1540	124.44	2.41	14.1	2779	18000
1530	142.15	2.10	12.3	2807	18000
1530	154.76	1.93	11.3	2824	18000
1535	162.35	1.84	10.8	2832	18000
1540	179.13	1.68	9.8	2849	18000
1535	195.07	1.53	9.0	2862	18000
1535	222.78	1.34	7.9	2880	18000

IH101

Mn_2 [Nm]	i	Pn_1 [kW]	n2 [rpm]	Fr1 [N]	Fr2 [N]
135	1.29	19.80	1353.8	1945	2612
182	1.41	24.40	1240.9	1882	2598
337	2.03	31.30	861.1	2519	3074
439	2.48	33.40	705.2	2518	3120
510	3.27	29.44	534.7	2768	3429
510	3.70	26.04	473.0	2906	3632
520	4.22	23.27	414.5	3021	3836
530	4.88	20.54	359.0	3134	4072
530	5.27	19.01	332.3	3196	4217
545	6.23	16.52	280.9	3294	4498
555	7.55	13.90	231.9	3402	4872
555	8.40	12.48	208.3	3459	5000

IH102

Mn_2 [Nm]	i	Pn_1 [kW]	n2 [rpm]	Fr1 [N]	Fr2 [N]
885	5.26	32.10	332.5	1872	9555

5.2 IH/IHA GEAR REDUCER - 1750 RPM

IH102

Mn_2 [Nm]	i	Pn_1 [kW]	n2 [rpm]	Fr1 [N]	Fr2 [N]
976	6.36	29.30	275.3	2050	9878
1031	7.05	27.90	248.2	1975	9408
1370	8.27	31.60	211.5	2131	9660
1497	9.99	28.60	175.1	2273	9796
1568	11.09	27.00	157.9	2336	9779
1927	13.32	27.60	131.3	2582	10718
2116	16.09	25.10	108.8	2801	11774
2226	17.85	23.80	98.0	2928	12590
2310	19.85	22.22	88.2	3045	13453
2310	21.44	20.56	81.6	3123	14102
2385	23.97	18.99	73.0	3198	14710
2385	25.89	17.58	67.6	3265	15401
2385	28.73	15.85	60.9	3346	16357
2730	30.72	16.96	57.0	3416	17349
2730	34.20	15.24	51.2	3484	18396
2390	38.45	11.86	45.5	3619	21009
2820	41.30	13.03	42.4	3573	19974
2820	45.82	11.75	38.2	3624	21091
2820	51.52	10.45	34.0	3676	22000

IH103

Mn_2 [Nm]	i	Pn_1 [kW]	n2 [rpm]	Fr1 [N]	Fr2 [N]
2990	55.47	10.51	31.6	3682	22000
2985	69.69	8.35	25.1	3766	22000
2990	79.82	7.30	21.9	3807	22000
2990	84.16	6.93	20.8	3822	22000
2990	93.36	6.24	18.7	3848	22000
2985	100.07	5.82	17.5	3865	22000
2990	120.84	4.82	14.5	3904	22000
2985	134.06	4.34	13.1	3922	22000
2990	143.42	4.06	12.2	3933	22000
2985	160.82	3.62	10.9	3950	22000
2985	181.07	3.21	9.7	3966	22000
2990	194.21	3.00	9.0	3975	22000
2985	215.45	2.70	8.1	3986	22000
2610	242.59	2.10	7.2	3995	22000

IH121

Mn_2 [Nm]	i	Pn_1 [kW]	n2 [rpm]	Fr1 [N]	Fr2 [N]
122	1.23	18.70	1421.9	1053	3102
164	1.42	21.90	1235.3	1238	3210

5.2 IH/IHA GEAR REDUCER - 1750 RPM

IH121

Mn_2 [Nm]	i	Pn_1 [kW]	n2 [rpm]	Fr1 [N]	Fr2 [N]
266	1.81	27.80	968.8	1819	3608
320	2.00	30.20	875.0	1888	3677
449	2.48	34.20	705.6	2173	3963
571	2.95	36.50	592.3	2456	4304
611	3.14	36.70	556.8	2510	4386
688	3.58	36.30	489.0	2637	4594
725	4.12	33.26	425.0	2807	4901
740	4.80	29.12	364.6	2944	5211
750	5.21	27.17	335.6	3012	5388
765	6.25	23.13	280.0	3147	5798
836	7.70	20.50	227.3	3224	6000

IH122

Mn_2 [Nm]	i	Pn_1 [kW]	n2 [rpm]	Fr1 [N]	Fr2 [N]
1155	5.27	41.80	331.8	973	13873
1210	5.78	40.00	303.0	1052	13972
1318	7.05	35.70	248.3	1285	14386
1687	7.74	41.60	226.0	1461	14886
1759	8.48	39.60	206.4	1620	15384
1886	10.35	34.80	169.2	1952	16625
2488	12.66	37.50	138.2	2162	17416
2593	13.86	35.70	126.2	2246	17753
2775	16.92	31.30	103.4	2505	19324
3168	19.32	31.30	90.6	2639	20249
3276	20.57	30.40	85.1	2723	20996
3422	22.52	29.00	77.7	2836	22104
3589	24.47	28.00	71.5	2931	23147
3615	27.49	25.10	63.7	3052	24663
3610	29.86	23.07	58.6	3130	25777
3907	33.00	22.60	53.0	3215	27161
4202	36.13	22.20	48.4	3286	28459
4270	44.10	18.48	39.7	3420	30000

IH123

Mn_2 [Nm]	i	Pn_1 [kW]	n2 [rpm]	Fr1 [N]	Fr2 [N]
4270	45.77	18.19	38.2	3442	30000
4270	55.87	14.90	31.3	3548	30000
4270	67.32	12.36	26.0	3630	30000
4270	73.71	11.29	23.7	3665	30000
4270	83.34	9.99	21.0	3707	30000
4270	89.97	9.25	19.4	3731	30000

5.2 IH/IHA GEAR REDUCER - 1750 RPM

IH123

Mn_2 [Nm]	i	Pn_1 [kW]	n2 [rpm]	Fr1 [N]	Fr2 [N]
4275	100.29	8.31	17.4	3761	30000
4270	108.34	7.68	16.1	3781	30000
4270	118.62	7.02	14.8	3803	30000
4270	128.18	6.49	13.7	3820	30000
4275	144.79	5.76	12.1	3844	30000
4265	155.22	5.36	11.3	3856	30000
4270	172.80	4.82	10.1	3874	30000
4270	189.19	4.40	9.2	3887	30000
4270	207.43	4.01	8.4	3900	30000
4275	230.92	3.61	7.6	3913	30000

IH142

Mn_2 [Nm]	i	Pn_1 [kW]	n2 [rpm]	Fr1 [N]	Fr2 [N]
1630	5.27	59.00	331.8	5427	17544
1778	6.36	53.40	275.4	6017	18654
1849	7.04	50.10	248.5	6374	19503
2424	7.84	59.00	223.1	6573	19885
2644	9.45	53.40	185.2	6503	18741
2732	10.47	49.80	167.1	6505	18062
3623	13.07	52.90	133.9	7258	20719
3928	15.75	47.60	111.1	7628	21957
4060	17.45	44.40	100.3	7877	23205
4589	20.04	43.70	87.3	8189	25066
5061	24.15	40.00	72.5	8585	28116
5286	26.76	37.70	65.4	8774	29879
5506	32.24	32.60	54.3	9071	33234
6309	38.85	31.00	45.0	9317	36807
6743	43.05	29.90	40.6	9435	38874

IH143

Mn_2 [Nm]	i	Pn_1 [kW]	n2 [rpm]	Fr1 [N]	Fr2 [N]
6835	48.35	27.56	36.2	9553	41292
6835	53.53	24.89	32.7	9647	43493
6835	59.22	22.50	29.6	9731	45753
6835	62.99	21.15	27.8	9778	47174
6835	71.35	18.67	24.5	9865	50129
6835	79.07	16.85	22.1	9929	52660
6830	86.43	15.40	20.2	9979	54922
6835	96.21	13.85	18.2	10034	55000
6835	104.51	12.75	16.7	10073	55000
6830	115.92	11.49	15.1	10117	55000

5.2 IH/IHA GEAR REDUCER - 1750 RPM

IH143

Mn_2 [Nm]	i	Pn_1 [kW]	n2 [rpm]	Fr1 [N]	Fr2 [N]
6835	128.47	10.37	13.6	10156	55000
6835	139.55	9.55	12.5	10185	55000
6830	154.33	8.63	11.3	10217	55000
6835	185.96	7.17	9.4	10269	55000
6830	206.08	6.46	8.5	10293	55000

5.3 IH/IHA GEAR REDUCER - 1400 RPM

IHA32

Mn_2 [Nm]	i	Pn_1 [kW]	n2 [rpm]	Fr1 [N]	Fr2 [N]
58	5.38	1.65	260.3	330	1096
58	6.52	1.36	214.8	409	1169
54	8.11	1.02	172.6	373	1257
65	10.94	0.91	128.0	441	1389
58	13.25	0.67	105.7	363	1481
58	16.49	0.54	84.9	398	1593
65	20.26	0.49	69.1	453	1706
61	24.55	0.38	57.0	386	1818
68	30.55	0.34	45.8	374	1956
77	35.44	0.33	39.5	480	2000
77	44.10	0.27	31.8	398	2000
68	48.75	0.21	28.7	398	2000
81	60.67	0.20	23.1	472	2000

IHA33

Mn_2 [Nm]	i	Pn_1 [kW]	n2 [rpm]	Fr1 [N]	Fr2 [N]
84	51.32	0.26	27.3	472	2000
85	59.65	0.22	23.5	472	2000
87	72.27	0.19	19.4	472	2000
84	89.94	0.15	15.6	472	2000
85	110.51	0.12	12.7	472	2000
88	133.88	0.10	10.5	472	2000
82	166.61	0.08	8.4	472	2000
85	193.30	0.07	7.2	472	2000
79	240.55	0.05	5.8	472	2000
92	279.07	0.05	5.0	472	2000
76	347.29	0.03	4.0	472	2000

IHA41

Mn_2 [Nm]	i	Pn_1 [kW]	n2 [rpm]	Fr1 [N]	Fr2 [N]
21	1.45	2.19	966.7	330	512
21	2.94	1.08	475.5	330	648
26	4.75	0.83	294.7	330	760
26	5.45	0.72	256.7	330	796
21	7.88	0.40	177.8	330	900
17	10.83	0.24	129.2	330	1001

5.3 IH/IHA GEAR REDUCER - 1400 RPM

IHA42

Mn_2 [Nm]	i	Pn_1 [kW]	n2 [rpm]	Fr1 [N]	Fr2 [N]
101	5.38	2.87	260.3	330	2308
101	6.52	2.37	214.8	409	2461
94	8.11	1.77	172.6	369	2647
108	10.94	1.51	128.0	424	2924
101	13.25	1.16	105.7	381	3117
101	16.49	0.94	84.9	398	3353
108	20.26	0.81	69.1	432	3591
112	24.55	0.70	57.0	422	3828
120	30.55	0.60	45.8	359	4118
128	35.44	0.55	39.5	457	4300
120	44.10	0.42	31.8	371	4300
111	48.75	0.35	28.7	416	4300
120	60.67	0.30	23.1	428	4300

IHA43

Mn_2 [Nm]	i	Pn_1 [kW]	n2 [rpm]	Fr1 [N]	Fr2 [N]
129	51.32	0.39	27.3	427	4300
127	59.65	0.33	23.5	426	4300
127	72.27	0.27	19.4	409	4300
128	89.94	0.22	15.6	398	4300
127	110.51	0.18	12.7	403	4300
125	133.88	0.15	10.5	409	4300
128	166.61	0.12	8.4	398	4300
127	193.30	0.10	7.2	427	4300
132	240.55	0.09	5.8	398	4300
122	279.07	0.07	5.0	427	4300
133	347.29	0.06	4.0	398	4300

IHA51

Mn_2 [Nm]	i	Pn_1 [kW]	n2 [rpm]	Fr1 [N]	Fr2 [N]
34	1.45	3.55	966.7	330	1410
34	2.94	1.75	475.5	330	1786
43	4.75	1.37	294.7	330	2095
43	5.45	1.19	256.7	330	2194
34	7.88	0.65	177.8	330	2479
21	10.83	0.29	129.2	330	2757

5.3 IH/IHA GEAR REDUCER - 1400 RPM

IHA52

Mn_2 [Nm]	i	Pn_1 [kW]	n2 [rpm]	Fr1 [N]	Fr2 [N]
173	5.14	5.14	272.2	550	2842
173	6.22	4.25	225.0	682	3029
173	7.73	3.42	181.0	664	3256
216	9.64	3.42	145.2	827	3505
202	11.67	2.64	120.0	636	3735
202	14.50	2.13	96.5	664	4015
216	16.91	1.95	82.8	758	4227
208	20.46	1.55	68.4	659	4504
202	25.43	1.21	55.0	641	4842
216	29.89	1.10	46.8	752	5110
256	36.17	1.08	38.7	682	5445
238	44.95	0.81	31.1	620	5855
256	49.78	0.79	28.1	798	6000
246	61.87	0.61	22.6	642	6000

IHA53

Mn_2 [Nm]	i	Pn_1 [kW]	n2 [rpm]	Fr1 [N]	Fr2 [N]
256	49.80	0.80	28.1	330	6000
256	60.25	0.66	23.2	409	6000
254	74.88	0.53	18.7	398	6000
254	88.02	0.45	15.9	421	6000
256	111.61	0.36	12.5	390	6000
258	138.71	0.29	10.1	398	6000
258	163.05	0.25	8.6	421	6000
252	200.27	0.20	7.0	403	6000
256	235.41	0.17	6.0	421	6000
248	284.81	0.14	4.9	409	6000
252	353.98	0.11	4.0	398	6000

IHA61

Mn_2 [Nm]	i	Pn_1 [kW]	n2 [rpm]	Fr1 [N]	Fr2 [N]
77	1.33	8.73	1050.0	550	2053
77	2.50	4.65	560.0	550	2531
94	4.38	3.24	319.3	550	3053
77	7.75	1.50	180.7	550	3691
60	10.67	0.85	131.2	550	4106

5.3 IH/IHA GEAR REDUCER - 1400 RPM

IHA62

Mn_2 [Nm]	i	Pn_1 [kW]	n2 [rpm]	Fr1 [N]	Fr2 [N]
274	5.14	8.14	272.2	550	4195
274	6.22	6.72	225.0	682	4470
274	7.73	5.41	181.0	664	4806
332	9.64	5.26	145.2	801	5173
318	11.67	4.16	120.0	652	5512
302	14.50	3.18	96.5	634	5926
360	16.91	3.25	82.8	842	6238
332	20.46	2.48	68.4	627	6647
310	25.43	1.86	55.0	621	7147
324	29.89	1.66	46.8	734	7543
400	36.17	1.69	38.7	712	8000
376	44.95	1.28	31.1	621	8000
316	49.78	0.97	28.1	626	8000
376	61.87	0.93	22.6	789	8000

IHA63

Mn_2 [Nm]	i	Pn_1 [kW]	n2 [rpm]	Fr1 [N]	Fr2 [N]
408	49.80	1.28	28.1	330	8000
408	60.25	1.06	23.2	409	8000
410	74.88	0.85	18.7	398	8000
408	88.02	0.72	15.9	421	8000
408	111.61	0.57	12.5	390	8000
410	138.71	0.46	10.1	398	8000
410	163.05	0.39	8.6	421	8000
406	200.27	0.32	7.0	403	8000
412	235.41	0.27	6.0	421	8000
404	284.81	0.22	4.9	409	8000
406	353.98	0.18	4.0	398	8000

IH032

Mn_2 [Nm]	i	Pn_1 [kW]	n2 [rpm]	Fr1 [N]	Fr2 [N]
69	4.70	2.24	298.1	700	2996
76	6.23	1.86	224.8	817	3285
90	7.76	1.77	180.3	843	3410
94	8.87	1.62	157.9	894	3572
101	10.14	1.52	138.0	924	3694
105	11.76	1.36	119.0	975	3902
123	13.72	1.37	102.0	973	3927
123	14.66	1.28	95.5	1000	4054
137	16.77	1.25	83.5	1010	4113
145	18.20	1.22	76.9	1021	4178

5.3 IH/IHA GEAR REDUCER - 1400 RPM

IH032

Mn_2 [Nm]	i	Pn_1 [kW]	n2 [rpm]	Fr1 [N]	Fr2 [N]
145	19.90	1.11	70.4	1054	4366
145	22.68	0.98	61.7	1097	4654
145	23.83	0.93	58.7	1112	4766
145	26.39	0.84	53.0	1140	5003
146	29.70	0.75	47.1	1169	5287
171	32.89	0.79	42.6	1192	5500
171	37.92	0.69	36.9	1220	5500
171	41.40	0.63	33.8	1236	5500
171	47.25	0.55	29.6	1257	5500

IH033

Mn_2 [Nm]	i	Pn_1 [kW]	n2 [rpm]	Fr1 [N]	Fr2 [N]
170	53.59	0.49	26.1	1274	5500
172	66.78	0.40	21.0	1300	5500
172	74.84	0.36	18.7	1311	5500
169	99.27	0.27	14.1	1334	5500
172	108.05	0.25	13.0	1339	5500
169	123.71	0.21	11.3	1348	5500
173	143.33	0.19	9.8	1355	5500
166	178.61	0.14	7.8	1365	5500
173	197.17	0.14	7.1	1369	5500
175	245.70	0.11	5.7	1375	5500

IH041

Mn_2 [Nm]	i	Pn_1 [kW]	n2 [rpm]	Fr1 [N]	Fr2 [N]
21	1.44	2.21	973.9	996	592
21	2.00	1.59	700.0	1101	675
26	2.55	1.54	550.0	1116	718
26	2.71	1.45	515.8	1132	736
34	3.11	1.65	450.9	1093	730
38	3.59	1.60	390.2	1100	752
38	4.20	1.37	333.3	1139	804
38	5.00	1.15	280.0	1176	864
43	5.50	1.18	254.6	1174	876
43	6.09	1.07	229.8	1193	914
43	7.67	0.85	182.6	1230	1000
47	8.75	0.81	160.0	1235	1000

5.3 IH/IHA GEAR REDUCER - 1400 RPM

IH042

Mn_2 [Nm]	i	Pn_1 [kW]	n2 [rpm]	Fr1 [N]	Fr2 [N]
116	5.46	3.24	256.3	434	3883
116	7.19	2.46	194.8	673	4382
152	8.91	2.60	157.1	628	4391
173	10.31	2.56	135.7	638	4449
181	11.80	2.34	118.6	709	4661
181	13.57	2.04	103.2	803	4983
181	15.96	1.73	87.7	897	5374
181	19.00	1.45	73.7	982	5820
181	21.00	1.32	66.7	1024	6088
188	23.15	1.24	60.5	1047	6274
188	26.04	1.10	53.8	1089	6600
202	27.50	1.12	50.9	1083	6600
238	30.45	1.19	46.0	1116	6600
238	34.10	1.07	41.1	1150	6600
238	37.76	0.96	37.1	1177	6600
238	43.75	0.83	32.0	1211	6600
238	47.53	0.76	29.4	1228	6600
238	54.25	0.67	25.8	1253	6600

IH043

Mn_2 [Nm]	i	Pn_1 [kW]	n2 [rpm]	Fr1 [N]	Fr2 [N]
256	61.83	0.65	22.6	1264	6600
256	76.67	0.52	18.3	1296	6600
256	87.05	0.46	16.1	1311	6600
256	114.55	0.35	12.2	1340	6600
256	125.69	0.32	11.1	1347	6600
256	142.04	0.28	9.9	1357	6600
256	165.38	0.24	8.5	1367	6600
256	205.07	0.19	6.8	1379	6600
256	227.50	0.18	6.2	1384	6600
256	282.10	0.14	5.0	1392	6600

IH051

Mn_2 [Nm]	i	Pn_1 [kW]	n2 [rpm]	Fr1 [N]	Fr2 [N]
34	1.27	4.04	1100.0	825	1483
51	1.42	5.43	986.4	630	1457
51	2.13	3.63	658.8	883	1705
60	2.57	3.53	544.4	901	1790
68	3.17	3.25	442.1	937	1897
77	3.69	3.16	379.7	952	1971
77	4.00	2.91	350.0	987	2036

5.3 IH/IHA GEAR REDUCER - 1400 RPM

IH051

Mn_2 [Nm]	i	Pn_1 [kW]	n2 [rpm]	Fr1 [N]	Fr2 [N]
81	4.77	2.57	293.6	1033	2160
85	5.25	2.45	266.7	1049	2222
85	5.82	2.21	240.6	1083	2315
85	7.33	1.75	190.9	1147	2500
86	8.38	1.55	167.2	1178	2500

IH052

Mn_2 [Nm]	i	Pn_1 [kW]	n2 [rpm]	Fr1 [N]	Fr2 [N]
188	5.73	5.01	244.4	259	4808
208	6.89	4.61	203.1	343	5024
244	8.53	4.37	164.2	398	5202
266	9.56	4.25	146.4	428	5292
280	11.51	3.71	121.6	548	5654
310	14.24	3.32	98.3	641	5993
324	16.59	2.98	84.4	718	6324
332	18.00	2.82	77.8	757	6513
332	19.97	2.54	70.1	821	6852
338	21.67	2.38	64.6	854	7058
338	24.71	2.09	56.7	921	7514
354	26.18	2.06	53.5	929	7588
354	28.44	1.90	49.2	966	7892
418	31.52	2.03	44.4	1008	8000
418	33.00	1.93	42.4	1026	8000
418	38.98	1.64	35.9	1083	8000
418	45.36	1.41	30.9	1127	8000
418	49.13	1.30	28.5	1148	8000
418	56.11	1.14	24.9	1179	8000

IH053

Mn_2 [Nm]	i	Pn_1 [kW]	n2 [rpm]	Fr1 [N]	Fr2 [N]
428	58.81	1.13	23.8	1185	8000
426	72.75	0.91	19.2	1226	8000
426	90.51	0.73	15.5	1260	8000
428	108.95	0.61	12.8	1283	8000
428	134.76	0.50	10.4	1305	8000
430	157.29	0.43	8.9	1319	8000
426	194.56	0.34	7.2	1334	8000
426	216.38	0.31	6.5	1340	8000
424	267.65	0.25	5.2	1352	8000

5.3 IH/IHA GEAR REDUCER - 1400 RPM

IH061

Mn_2 [Nm]	i	Pn_1 [kW]	n2 [rpm]	Fr1 [N]	Fr2 [N]
66	1.34	7.40	1041.9	2094	2204
103	2.13	7.33	658.8	2140	2415
102	2.57	5.99	544.4	2285	2618
111	3.17	5.30	442.1	2368	2799
128	3.69	5.25	379.7	2374	2870
128	4.00	4.84	350.0	2421	2972
137	4.77	4.34	293.6	2479	3146
145	5.25	4.17	266.7	2496	3221
145	5.82	3.77	240.6	2543	3367
145	7.33	2.99	190.9	2632	3700
145	8.38	2.62	167.2	2675	3700

IH062

Mn_2 [Nm]	i	Pn_1 [kW]	n2 [rpm]	Fr1 [N]	Fr2 [N]
360	5.38	10.23	260.5	853	7772
396	5.93	10.19	235.9	860	7839
396	7.39	8.18	189.4	1250	8677
432	8.50	7.76	164.7	1332	8953
434	9.39	7.06	149.2	1475	9371
470	11.69	6.14	119.8	1652	10056
505	12.67	6.09	110.5	1660	10141
505	14.75	5.23	94.9	1827	10881
575	16.29	5.39	86.0	1791	10801
600	17.67	5.19	79.2	1837	11051
610	20.28	4.59	69.0	1946	11682
610	23.27	4.00	60.2	2061	12000
610	25.70	3.62	54.5	2134	12000
576	29.33	3.00	47.7	2259	12000
725	32.00	3.46	43.8	2274	12000
680	36.99	2.81	37.9	2379	12000
725	40.33	2.74	34.7	2391	12000
725	46.06	2.40	30.4	2447	12000

IH063

Mn_2 [Nm]	i	Pn_1 [kW]	n2 [rpm]	Fr1 [N]	Fr2 [N]
725	49.45	2.29	28.3	2474	12000
725	54.61	2.07	25.6	2509	12000
725	68.00	1.66	20.6	2574	12000
720	85.82	1.31	16.3	2630	12000
725	94.76	1.19	14.8	2650	12000
720	118.00	0.95	11.9	2688	12000

5.3 IH/IHA GEAR REDUCER - 1400 RPM

IH063

Mn_2 [Nm]	i	Pn_1 [kW]	n2 [rpm]	Fr1 [N]	Fr2 [N]
725	135.40	0.84	10.3	2707	12000
725	149.51	0.76	9.4	2720	12000
725	170.67	0.66	8.2	2735	12000
720	186.18	0.60	7.5	2744	12000
730	215.21	0.53	6.5	2757	12000
720	234.67	0.48	6.0	2764	12000
715	268.00	0.42	5.2	2774	12000

IH081

Mn_2 [Nm]	i	Pn_1 [kW]	n2 [rpm]	Fr1 [N]	Fr2 [N]
91	1.30	10.60	1079.2	922	2316
122	1.43	12.90	980.0	925	2337
196	1.93	15.34	725.0	1404	2637
238	2.54	14.15	550.8	1527	2777
264	3.25	12.28	430.8	1730	2990
264	3.72	10.72	376.1	1896	3186
272	4.00	10.28	350.0	1941	3253
272	4.67	8.81	300.0	2098	3493
282	5.54	7.70	252.8	2221	3734
290	6.08	7.20	230.1	2272	3854
298	7.50	6.00	186.7	2398	4000
298	8.44	5.33	165.8	2470	4000

IH082

Mn_2 [Nm]	i	Pn_1 [kW]	n2 [rpm]	Fr1 [N]	Fr2 [N]
505	5.39	14.31	259.8	816	9756
505	5.95	12.97	235.4	1021	10188
575	7.39	11.87	189.3	1182	10739
575	8.02	10.95	174.5	1325	11135
650	8.85	11.21	158.2	1292	11171
795	11.01	11.03	127.2	1321	11409
1010	13.50	11.42	103.7	1258	11195
1080	14.90	11.07	94.0	1308	11324
1080	16.62	9.93	84.3	1484	11998
1080	18.53	8.90	75.6	1641	12695
1155	19.38	9.10	72.2	1615	12535
1155	21.39	8.25	65.5	1745	13197
1155	22.80	7.74	61.4	1824	13639
1155	26.60	6.63	52.6	1993	14744
1155	27.88	6.33	50.2	2040	15093
1365	31.15	6.69	44.9	2141	15937

5.3 IH/IHA GEAR REDUCER - 1400 RPM

IH082

Mn_2 [Nm]	i	Pn_1 [kW]	n2 [rpm]	Fr1 [N]	Fr2 [N]
1365	34.38	6.06	40.7	2222	16712
1365	38.70	5.39	36.2	2310	17681
1365	42.75	4.88	32.8	2376	18000
1365	48.13	4.33	29.1	2447	18000

IH083

Mn_2 [Nm]	i	Pn_1 [kW]	n2 [rpm]	Fr1 [N]	Fr2 [N]
1365	56.53	3.77	24.8	2530	18000
1535	71.48	3.35	19.6	2583	18000
1535	78.87	3.04	17.8	2623	18000
1535	85.56	2.80	16.4	2653	18000
1535	98.09	2.44	14.3	2698	18000
1535	112.78	2.12	12.4	2739	18000
1540	124.44	1.93	11.2	2764	18000
1530	142.15	1.68	9.8	2794	18000
1530	154.76	1.54	9.1	2812	18000
1535	162.35	1.47	8.6	2821	18000
1540	179.13	1.34	7.8	2838	18000
1535	195.07	1.23	7.2	2852	18000
1535	222.78	1.07	6.3	2872	18000

IH101

Mn_2 [Nm]	i	Pn_1 [kW]	n2 [rpm]	Fr1 [N]	Fr2 [N]
169	1.29	19.80	1083.0	1816	2827
228	1.41	24.40	992.7	1749	2813
384	2.03	28.56	688.9	2427	3326
468	2.48	28.50	564.2	2425	3378
510	3.27	23.55	427.8	2691	3713
510	3.70	20.83	378.4	2838	3932
520	4.22	18.61	331.6	2961	4152
530	4.88	16.43	287.2	3081	4407
530	5.27	15.21	265.8	3147	4563
545	6.23	13.22	224.7	3251	4866
555	7.55	11.12	185.5	3366	5000
555	8.40	9.99	166.7	3427	5000

IH102

Mn_2 [Nm]	i	Pn_1 [kW]	n2 [rpm]	Fr1 [N]	Fr2 [N]
1106	5.26	32.10	266.0	1731	10378

5.3 IH/IHA GEAR REDUCER - 1400 RPM

IH102

Mn_2 [Nm]	i	Pn_1 [kW]	n2 [rpm]	Fr1 [N]	Fr2 [N]
1219	6.36	29.30	220.3	1919	10737
1288	7.05	27.90	198.6	1840	10244
1712	8.27	31.60	169.2	2006	10525
1871	9.99	28.60	140.1	2157	10686
1960	11.09	27.00	126.3	2223	10677
2240	13.32	25.67	105.1	2486	11693
2310	16.09	21.92	87.0	2719	12836
2310	17.85	19.76	78.4	2854	13715
2310	19.85	17.77	70.5	2979	14645
2310	21.44	16.45	65.3	3061	15343
2385	23.97	15.19	58.4	3141	16003
2385	25.89	14.06	54.1	3212	16747
2385	28.73	12.68	48.7	3299	17778
2730	30.72	13.57	45.6	3372	18842
2730	34.20	12.19	40.9	3446	19969
2390	38.45	9.49	36.4	3589	22000
2820	41.30	10.43	33.9	3540	21674
2820	45.82	9.40	30.6	3594	22000
2820	51.52	8.36	27.2	3649	22000

IH103

Mn_2 [Nm]	i	Pn_1 [kW]	n2 [rpm]	Fr1 [N]	Fr2 [N]
2990	55.47	8.41	25.2	3656	22000
2985	69.69	6.68	20.1	3745	22000
2990	79.82	5.84	17.5	3789	22000
2990	84.16	5.54	16.6	3804	22000
2990	93.36	4.99	15.0	3833	22000
2985	100.07	4.65	14.0	3850	22000
2990	120.84	3.86	11.6	3892	22000
2985	134.06	3.47	10.4	3911	22000
2990	143.42	3.25	9.8	3923	22000
2985	160.82	2.89	8.7	3941	22000
2985	181.07	2.57	7.7	3958	22000
2990	194.21	2.40	7.2	3967	22000
2985	215.45	2.16	6.5	3979	22000
2610	242.59	1.68	5.8	3989	22000

IH121

Mn_2 [Nm]	i	Pn_1 [kW]	n2 [rpm]	Fr1 [N]	Fr2 [N]
152	1.23	18.70	1137.5	869	3360
205	1.42	21.90	988.2	1066	3478

5.3 IH/IHA GEAR REDUCER - 1400 RPM

IH121

Mn_2 [Nm]	i	Pn_1 [kW]	n2 [rpm]	Fr1 [N]	Fr2 [N]
332	1.81	27.80	775.0	1685	3907
400	2.00	30.20	700.0	1757	3983
561	2.48	34.20	564.5	2061	4292
680	2.95	34.78	473.9	2362	4659
700	3.14	33.66	445.4	2419	4749
725	3.58	30.62	391.2	2555	4973
725	4.12	26.61	340.0	2735	5304
740	4.80	23.30	291.7	2881	5638
750	5.21	21.74	268.5	2953	5829
765	6.25	18.50	224.0	3097	6000
850	7.70	16.68	181.8	3179	6000

IH122

Mn_2 [Nm]	i	Pn_1 [kW]	n2 [rpm]	Fr1 [N]	Fr2 [N]
1444	5.27	41.80	265.4	778	15066
1513	5.78	40.00	242.4	862	15180
1648	7.05	35.70	198.6	1110	15643
2109	7.74	41.60	180.8	1297	16186
2198	8.48	39.60	165.2	1467	16726
2358	10.35	34.80	135.3	1819	18071
3110	12.66	37.50	110.6	2043	18939
3241	13.86	35.70	101.0	2132	19311
3468	16.92	31.30	82.7	2408	21011
3615	19.32	28.57	72.5	2550	22015
3615	20.57	26.83	68.1	2640	22820
3610	22.52	24.48	62.2	2760	24014
3615	24.47	22.56	57.2	2861	25137
3615	27.49	20.08	50.9	2989	26770
3610	29.86	18.46	46.9	3072	27970
4270	33.00	19.76	42.4	3163	29461
4270	36.13	18.05	38.8	3238	30000
4270	44.10	14.79	31.8	3381	30000

IH123

Mn_2 [Nm]	i	Pn_1 [kW]	n2 [rpm]	Fr1 [N]	Fr2 [N]
4270	45.77	14.55	30.6	3405	30000
4270	55.87	11.92	25.1	3518	30000
4270	67.32	9.89	20.8	3605	30000
4270	73.71	9.03	19.0	3641	30000
4270	83.34	7.99	16.8	3686	30000
4270	89.97	7.40	15.6	3711	30000

5.3 IH/IHA GEAR REDUCER - 1400 RPM

IH123

Mn_2 [Nm]	i	Pn_1 [kW]	n2 [rpm]	Fr1 [N]	Fr2 [N]
4275	100.29	6.65	14.0	3744	30000
4270	108.34	6.15	12.9	3765	30000
4270	118.62	5.61	11.8	3788	30000
4270	128.18	5.20	10.9	3806	30000
4275	144.79	4.60	9.7	3832	30000
4265	155.22	4.29	9.0	3845	30000
4270	172.80	3.85	8.1	3864	30000
4270	189.19	3.52	7.4	3878	30000
4270	207.43	3.21	6.8	3891	30000
4275	230.92	2.89	6.1	3905	30000

IH142

Mn_2 [Nm]	i	Pn_1 [kW]	n2 [rpm]	Fr1 [N]	Fr2 [N]
2038	5.27	59.00	265.4	5102	19072
2222	6.36	53.40	220.3	5730	20279
2311	7.04	50.10	198.8	6109	21198
3030	7.84	59.00	178.5	6321	21620
3305	9.45	53.40	148.2	6247	20432
3415	10.47	49.80	133.7	6249	19728
4528	13.07	52.90	107.1	7050	22593
4909	15.75	47.60	88.9	7443	23946
5075	17.45	44.40	80.2	7708	25294
5736	20.04	43.70	69.8	8040	27303
5780	24.15	36.55	58.0	8462	30588
5780	26.76	32.98	52.3	8663	32488
6835	32.24	32.37	43.4	8978	36102
6835	38.85	26.87	36.0	9240	39950
6835	43.05	24.24	32.5	9365	42176

IH143

Mn_2 [Nm]	i	Pn_1 [kW]	n2 [rpm]	Fr1 [N]	Fr2 [N]
6835	48.35	22.05	29.0	9492	44781
6835	53.53	19.91	26.1	9591	47153
6835	59.22	18.00	23.6	9680	49587
6835	62.99	16.92	22.2	9731	51117
6835	71.35	14.94	19.6	9823	54301
6835	79.07	13.48	17.7	9891	55000
6830	86.43	12.32	16.2	9945	55000
6835	96.21	11.08	14.6	10003	55000
6835	104.51	10.20	13.4	10044	55000
6830	115.92	9.19	12.1	10091	55000

5.3 IH/IHA GEAR REDUCER - 1400 RPM

IH143

Mn_2 [Nm]	i	Pn_1 [kW]	n2 [rpm]	Fr1 [N]	Fr2 [N]
6835	128.47	8.30	10.9	10133	55000
6835	139.55	7.64	10.0	10164	55000
6830	154.33	6.90	9.1	10198	55000
6835	185.96	5.73	7.5	10252	55000
6830	206.08	5.17	6.8	10279	55000

5.4 IH/IHA GEAR REDUCER - 1140 RPM

IHA32

Mn_2 [Nm]	i	Pn_1 [kW]	n2 [rpm]	Fr1 [N]	Fr2 [N]
58	5.38	1.33	211.9	330	1174
58	6.52	1.10	174.9	409	1252
54	8.11	0.82	140.6	373	1346
65	10.94	0.73	104.2	441	1487
58	13.25	0.54	86.0	363	1586
58	16.49	0.43	69.1	398	1705
65	20.26	0.39	56.3	453	1827
61	24.55	0.31	46.4	386	1947
68	30.55	0.27	37.3	374	2000
77	35.44	0.27	32.2	480	2000
77	44.10	0.21	25.9	398	2000
68	48.75	0.17	23.4	398	2000
81	60.67	0.16	18.8	472	2000

IHA33

Mn_2 [Nm]	i	Pn_1 [kW]	n2 [rpm]	Fr1 [N]	Fr2 [N]
84	51.32	0.21	22.2	472	2000
85	59.65	0.18	19.1	472	2000
87	72.27	0.15	15.8	472	2000
84	89.94	0.12	12.7	472	2000
85	110.51	0.10	10.3	472	2000
88	133.88	0.08	8.5	472	2000
82	166.61	0.06	6.8	472	2000
85	193.30	0.06	5.9	472	2000
79	240.55	0.04	4.7	472	2000
92	279.07	0.04	4.1	472	2000
76	347.29	0.03	3.3	472	2000

IHA41

Mn_2 [Nm]	i	Pn_1 [kW]	n2 [rpm]	Fr1 [N]	Fr2 [N]
21	1.45	1.77	787.1	330	548
21	2.94	0.87	387.2	330	694
26	4.75	0.67	240.0	330	814
26	5.45	0.58	209.0	330	852
21	7.88	0.32	144.8	330	963
17	10.83	0.19	105.2	330	1072

5.4 IH/IHA GEAR REDUCER - 1140 RPM

IHA42

Mn_2 [Nm]	i	Pn_1 [kW]	n2 [rpm]	Fr1 [N]	Fr2 [N]
101	5.38	2.31	211.9	330	2472
101	6.52	1.91	174.9	409	2635
94	8.11	1.43	140.6	369	2834
108	10.94	1.22	104.2	424	3131
101	13.25	0.94	86.0	381	3338
101	16.49	0.75	69.1	398	3590
108	20.26	0.66	56.3	432	3846
112	24.55	0.56	46.4	422	4100
120	30.55	0.48	37.3	359	4300
128	35.44	0.44	32.2	457	4300
120	44.10	0.34	25.9	371	4300
111	48.75	0.28	23.4	416	4300
120	60.67	0.24	18.8	428	4300

IHA43

Mn_2 [Nm]	i	Pn_1 [kW]	n2 [rpm]	Fr1 [N]	Fr2 [N]
129	51.32	0.32	22.2	427	4300
127	59.65	0.27	19.1	426	4300
127	72.27	0.22	15.8	409	4300
128	89.94	0.18	12.7	398	4300
127	110.51	0.14	10.3	403	4300
125	133.88	0.12	8.5	409	4300
128	166.61	0.10	6.8	398	4300
127	193.30	0.08	5.9	427	4300
132	240.55	0.07	4.7	398	4300
122	279.07	0.05	4.1	427	4300
133	347.29	0.05	3.3	398	4300

IHA51

Mn_2 [Nm]	i	Pn_1 [kW]	n2 [rpm]	Fr1 [N]	Fr2 [N]
34	1.45	2.86	787.1	330	1510
34	2.94	1.41	387.2	330	1913
43	4.75	1.10	240.0	330	2243
43	5.45	0.96	209.0	330	2349
34	7.88	0.53	144.8	330	2655
21	10.83	0.24	105.2	330	2953

5.4 IH/IHA GEAR REDUCER - 1140 RPM

IHA52

Mn_2 [Nm]	i	Pn_1 [kW]	n2 [rpm]	Fr1 [N]	Fr2 [N]
173	5.14	4.14	221.7	550	3044
173	6.22	3.42	183.2	682	3243
173	7.73	2.75	147.4	664	3487
216	9.64	2.76	118.2	827	3753
202	11.67	2.13	97.7	636	3999
202	14.50	1.72	78.6	664	4300
216	16.91	1.57	67.4	758	4526
208	20.46	1.25	55.7	659	4823
202	25.43	0.98	44.8	641	5185
216	29.89	0.89	38.1	752	5472
256	36.17	0.87	31.5	682	5831
238	44.95	0.65	25.4	620	6000
256	49.78	0.63	22.9	798	6000
246	61.87	0.49	18.4	642	6000

IHA53

Mn_2 [Nm]	i	Pn_1 [kW]	n2 [rpm]	Fr1 [N]	Fr2 [N]
256	49.80	0.65	22.9	330	6000
256	60.25	0.53	18.9	409	6000
254	74.88	0.43	15.2	398	6000
254	88.02	0.36	12.9	421	6000
256	111.61	0.29	10.2	390	6000
258	138.71	0.23	8.2	398	6000
258	163.05	0.20	7.0	421	6000
252	200.27	0.16	5.7	403	6000
256	235.41	0.14	4.8	421	6000
248	284.81	0.11	4.0	409	6000
252	353.98	0.09	3.2	398	6000

IHA61

Mn_2 [Nm]	i	Pn_1 [kW]	n2 [rpm]	Fr1 [N]	Fr2 [N]
77	1.33	7.04	855.0	550	2198
77	2.50	3.75	456.0	550	2711
94	4.38	2.61	260.0	550	3269
77	7.75	1.21	147.1	550	3953
60	10.67	0.69	106.9	550	4397

5.4 IH/IHA GEAR REDUCER - 1140 RPM

IHA62

Mn_2 [Nm]	i	Pn_1 [kW]	n2 [rpm]	Fr1 [N]	Fr2 [N]
274	5.14	6.56	221.7	550	4492
274	6.22	5.42	183.2	682	4787
274	7.73	4.36	147.4	664	5147
332	9.64	4.24	118.2	801	5540
318	11.67	3.36	97.7	652	5903
302	14.50	2.56	78.6	634	6346
360	16.91	2.62	67.4	842	6681
332	20.46	2.00	55.7	627	7119
310	25.43	1.50	44.8	621	7654
324	29.89	1.33	38.1	734	8000
400	36.17	1.36	31.5	712	8000
376	44.95	1.03	25.4	621	8000
316	49.78	0.78	22.9	626	8000
376	61.87	0.75	18.4	789	8000

IHA63

Mn_2 [Nm]	i	Pn_1 [kW]	n2 [rpm]	Fr1 [N]	Fr2 [N]
408	49.80	1.03	22.9	330	8000
408	60.25	0.85	18.9	409	8000
410	74.88	0.69	15.2	398	8000
408	88.02	0.58	12.9	421	8000
408	111.61	0.46	10.2	390	8000
410	138.71	0.37	8.2	398	8000
410	163.05	0.32	7.0	421	8000
406	200.27	0.25	5.7	403	8000
412	235.41	0.22	4.8	421	8000
404	284.81	0.18	4.0	409	8000
406	353.98	0.14	3.2	398	8000

IH032

Mn_2 [Nm]	i	Pn_1 [kW]	n2 [rpm]	Fr1 [N]	Fr2 [N]
69	4.70	1.81	242.8	682	3253
76	6.23	1.50	183.0	803	3568
90	7.76	1.43	146.9	829	3712
94	8.87	1.31	128.6	881	3887
101	10.14	1.23	112.4	912	4022
105	11.76	1.10	96.9	964	4248
123	13.72	1.10	83.1	962	4287
123	14.66	1.03	77.8	990	4422
137	16.77	1.01	68.0	1000	4495
145	18.20	0.98	62.6	1012	4569

5.4 IH/IHA GEAR REDUCER - 1140 RPM

IH032

Mn_2 [Nm]	i	Pn_1 [kW]	n2 [rpm]	Fr1 [N]	Fr2 [N]
145	19.90	0.90	57.3	1045	4771
145	22.68	0.79	50.3	1089	5079
145	23.83	0.75	47.8	1105	5199
145	26.39	0.68	43.2	1134	5453
146	29.70	0.61	38.4	1164	5500
171	32.89	0.64	34.7	1187	5500
171	37.92	0.56	30.1	1216	5500
171	41.40	0.51	27.5	1232	5500
171	47.25	0.45	24.1	1253	5500

IH033

Mn_2 [Nm]	i	Pn_1 [kW]	n2 [rpm]	Fr1 [N]	Fr2 [N]
170	53.59	0.40	21.3	1271	5500
172	66.78	0.32	17.1	1297	5500
172	74.84	0.29	15.2	1308	5500
169	99.27	0.21	11.5	1332	5500
172	108.05	0.20	10.6	1338	5500
169	123.71	0.17	9.2	1346	5500
173	143.33	0.15	8.0	1354	5500
166	178.61	0.12	6.4	1364	5500
173	197.17	0.11	5.8	1368	5500
175	245.70	0.09	4.6	1375	5500

IH041

Mn_2 [Nm]	i	Pn_1 [kW]	n2 [rpm]	Fr1 [N]	Fr2 [N]
21	1.44	1.78	793.0	986	640
21	2.00	1.28	570.0	1094	728
26	2.55	1.24	447.9	1110	775
26	2.71	1.17	420.0	1126	795
34	3.11	1.33	367.1	1086	790
38	3.59	1.29	317.7	1093	815
38	4.20	1.10	271.4	1134	870
38	5.00	0.93	228.0	1171	935
43	5.50	0.95	207.3	1169	949
43	6.09	0.86	187.2	1189	990
43	7.67	0.68	148.7	1226	1000
47	8.75	0.65	130.3	1231	1000

5.4 IH/IHA GEAR REDUCER - 1140 RPM

IH042

Mn_2 [Nm]	i	Pn_1 [kW]	n2 [rpm]	Fr1 [N]	Fr2 [N]
116	5.46	2.61	208.7	409	4219
116	7.19	1.99	158.6	654	4753
152	8.91	2.10	127.9	608	4783
173	10.31	2.06	110.5	619	4855
181	11.80	1.89	96.6	691	5087
181	13.57	1.64	84.0	787	5431
181	15.96	1.40	71.4	883	5850
181	19.00	1.17	60.0	971	6328
181	21.00	1.06	54.3	1014	6600
188	23.15	1.00	49.2	1038	6600
188	26.04	0.89	43.8	1081	6600
202	27.50	0.90	41.5	1074	6600
238	30.45	0.96	37.4	1109	6600
238	34.10	0.86	33.4	1143	6600
238	37.76	0.78	30.2	1170	6600
238	43.75	0.67	26.1	1206	6600
238	47.53	0.62	24.0	1223	6600
238	54.25	0.54	21.0	1249	6600

IH043

Mn_2 [Nm]	i	Pn_1 [kW]	n2 [rpm]	Fr1 [N]	Fr2 [N]
256	61.83	0.52	18.4	1260	6600
256	76.67	0.42	14.9	1292	6600
256	87.05	0.37	13.1	1309	6600
256	114.55	0.28	9.9	1337	6600
256	125.69	0.26	9.1	1345	6600
256	142.04	0.23	8.0	1355	6600
256	165.38	0.19	6.9	1365	6600
256	205.07	0.16	5.6	1378	6600
256	227.50	0.14	5.0	1383	6600
256	282.10	0.11	4.0	1391	6600

IH051

Mn_2 [Nm]	i	Pn_1 [kW]	n2 [rpm]	Fr1 [N]	Fr2 [N]
34	1.27	3.26	895.7	811	1596
51	1.42	4.38	803.2	610	1573
51	2.13	2.92	536.5	870	1837
60	2.57	2.84	443.3	889	1931
68	3.17	2.62	360.0	925	2048
77	3.69	2.54	309.1	941	2128
77	4.00	2.35	285.0	977	2198

5.4 IH/IHA GEAR REDUCER - 1140 RPM

IH051

Mn_2 [Nm]	i	Pn_1 [kW]	n2 [rpm]	Fr1 [N]	Fr2 [N]
81	4.77	2.07	239.0	1024	2333
85	5.25	1.97	217.1	1041	2400
85	5.82	1.78	195.9	1075	2499
85	7.33	1.41	155.4	1141	2500
86	8.38	1.25	136.1	1172	2500

IH052

Mn_2 [Nm]	i	Pn_1 [kW]	n2 [rpm]	Fr1 [N]	Fr2 [N]
188	5.73	4.04	199.1	231	5228
208	6.89	3.71	165.4	317	5469
244	8.53	3.52	133.7	373	5675
266	9.56	3.42	119.2	403	5781
280	11.51	2.99	99.0	527	6174
310	14.24	2.68	80.1	622	6550
324	16.59	2.40	68.7	701	6910
332	18.00	2.27	63.3	741	7116
332	19.97	2.05	57.1	806	7478
338	21.67	1.92	52.6	841	7702
338	24.71	1.68	46.1	909	8000
354	26.18	1.66	43.5	917	8000
354	28.44	1.53	40.1	955	8000
418	31.52	1.63	36.2	999	8000
418	33.00	1.56	34.5	1017	8000
418	38.98	1.32	29.2	1075	8000
418	45.36	1.13	25.1	1121	8000
418	49.13	1.05	23.2	1142	8000
418	56.11	0.92	20.3	1174	8000

IH053

Mn_2 [Nm]	i	Pn_1 [kW]	n2 [rpm]	Fr1 [N]	Fr2 [N]
428	58.81	0.92	19.4	1180	8000
426	72.75	0.74	15.7	1222	8000
426	90.51	0.59	12.6	1256	8000
428	108.95	0.49	10.5	1280	8000
428	134.76	0.40	8.5	1303	8000
430	157.29	0.34	7.2	1317	8000
426	194.56	0.28	5.9	1332	8000
426	216.38	0.25	5.3	1339	8000
424	267.65	0.20	4.3	1350	8000

5.4 IH/IHA GEAR REDUCER - 1140 RPM

IH061

Mn_2 [Nm]	i	Pn_1 [kW]	n2 [rpm]	Fr1 [N]	Fr2 [N]
68	1.34	6.17	848.4	2072	2381
103	2.13	5.91	536.5	2119	2618
102	2.57	4.83	443.3	2268	2835
111	3.17	4.27	360.0	2353	3031
128	3.69	4.23	309.1	2358	3112
128	4.00	3.90	285.0	2407	3221
137	4.77	3.50	239.0	2467	3411
145	5.25	3.37	217.1	2484	3494
145	5.82	3.04	195.9	2532	3650
145	7.33	2.41	155.4	2624	3700
145	8.38	2.11	136.1	2668	3700

IH062

Mn_2 [Nm]	i	Pn_1 [kW]	n2 [rpm]	Fr1 [N]	Fr2 [N]
360	5.38	8.25	212.1	803	8456
396	5.93	8.21	192.1	811	8542
396	7.39	6.60	154.2	1211	9439
432	8.50	6.26	134.1	1295	9748
434	9.39	5.69	121.5	1441	10196
470	11.69	4.95	97.5	1623	10942
505	12.67	4.91	90.0	1630	11047
505	14.75	4.22	77.3	1802	11839
575	16.29	4.35	70.0	1765	11780
600	17.67	4.18	64.5	1812	12000
610	20.28	3.70	56.2	1923	12000
610	23.27	3.23	49.0	2041	12000
610	25.70	2.92	44.4	2117	12000
576	29.33	2.42	38.9	2244	12000
725	32.00	2.79	35.6	2259	12000
680	36.99	2.26	30.8	2368	12000
725	40.33	2.21	28.3	2380	12000
725	46.06	1.94	24.8	2437	12000

IH063

Mn_2 [Nm]	i	Pn_1 [kW]	n2 [rpm]	Fr1 [N]	Fr2 [N]
725	49.45	1.84	23.1	2465	12000
725	54.61	1.67	20.9	2500	12000
725	68.00	1.34	16.8	2568	12000
720	85.82	1.05	13.3	2625	12000
725	94.76	0.96	12.0	2645	12000
720	118.00	0.77	9.7	2684	12000

5.4 IH/IHA GEAR REDUCER - 1140 RPM

IH063

Mn_2 [Nm]	i	Pn_1 [kW]	n2 [rpm]	Fr1 [N]	Fr2 [N]
725	135.40	0.67	8.4	2704	12000
725	149.51	0.61	7.6	2717	12000
725	170.67	0.53	6.7	2732	12000
720	186.18	0.49	6.1	2742	12000
730	215.21	0.43	5.3	2755	12000
720	234.67	0.39	4.9	2762	12000
715	268.00	0.34	4.2	2772	12000

IH081

Mn_2 [Nm]	i	Pn_1 [kW]	n2 [rpm]	Fr1 [N]	Fr2 [N]
113	1.30	10.60	878.8	870	2517
151	1.43	12.90	798.0	872	2543
196	1.93	12.37	590.4	1363	2867
238	2.54	11.41	448.5	1489	3026
264	3.25	9.90	350.8	1697	3259
264	3.72	8.64	306.3	1867	3469
272	4.00	8.29	285.0	1913	3543
272	4.67	7.10	244.3	2074	3800
282	5.54	6.20	205.8	2201	4000
290	6.08	5.81	187.4	2253	4000
298	7.50	4.84	152.0	2382	4000
298	8.44	4.30	135.0	2456	4000

IH082

Mn_2 [Nm]	i	Pn_1 [kW]	n2 [rpm]	Fr1 [N]	Fr2 [N]
505	5.39	11.54	211.6	761	10594
505	5.95	10.46	191.7	971	11056
575	7.39	9.57	154.2	1136	11669
575	8.02	8.83	142.1	1283	12092
650	8.85	9.04	128.8	1249	12152
795	11.01	8.89	103.6	1279	12448
1010	13.50	9.21	84.4	1214	12282
1080	14.90	8.93	76.5	1266	12441
1080	16.62	8.00	68.6	1446	13164
1080	18.53	7.18	61.5	1607	13909
1155	19.38	7.34	58.8	1580	13760
1155	21.39	6.65	53.3	1714	14468
1155	22.80	6.24	50.0	1794	14941
1155	26.60	5.35	42.9	1967	16125
1155	27.88	5.10	40.9	2015	16498
1365	31.15	5.39	36.6	2120	17402

5.4 IH/IHA GEAR REDUCER - 1140 RPM

IH082

Mn_2 [Nm]	i	Pn_1 [kW]	n2 [rpm]	Fr1 [N]	Fr2 [N]
1365	34.38	4.89	33.2	2203	18000
1365	38.70	4.34	29.4	2293	18000
1365	42.75	3.93	26.7	2361	18000
1365	48.13	3.49	23.7	2433	18000

IH083

Mn_2 [Nm]	i	Pn_1 [kW]	n2 [rpm]	Fr1 [N]	Fr2 [N]
1365	56.53	3.04	20.2	2518	18000
1535	71.48	2.70	15.9	2572	18000
1535	78.87	2.45	14.4	2613	18000
1535	85.56	2.26	13.3	2644	18000
1535	98.09	1.97	11.6	2691	18000
1535	112.78	1.71	10.1	2732	18000
1540	124.44	1.56	9.2	2758	18000
1530	142.15	1.35	8.0	2789	18000
1530	154.76	1.24	7.4	2807	18000
1535	162.35	1.19	7.0	2816	18000
1540	179.13	1.08	6.4	2834	18000
1535	195.07	0.99	5.8	2848	18000
1535	222.78	0.87	5.1	2868	18000

IH101

Mn_2 [Nm]	i	Pn_1 [kW]	n2 [rpm]	Fr1 [N]	Fr2 [N]
210	1.29	19.80	881.9	1762	3074
282	1.41	24.40	808.4	1694	3065
384	2.03	23.02	561.0	2389	3614
468	2.48	22.98	459.4	2387	3682
510	3.27	18.99	348.3	2660	4046
510	3.70	16.79	308.1	2810	4281
520	4.22	15.01	270.0	2936	4518
530	4.88	13.25	233.8	3059	4792
530	5.27	12.26	216.5	3126	4959
545	6.23	10.66	183.0	3233	5000
555	7.55	8.96	151.1	3351	5000
555	8.40	8.05	135.7	3414	5000

IH102

Mn_2 [Nm]	i	Pn_1 [kW]	n2 [rpm]	Fr1 [N]	Fr2 [N]
1300	5.26	30.41	216.6	1672	11427

5.4 IH/IHA GEAR REDUCER - 1140 RPM

IH102

Mn_2 [Nm]	i	Pn_1 [kW]	n2 [rpm]	Fr1 [N]	Fr2 [N]
1445	6.36	27.99	179.4	1865	11846
1598	7.05	27.90	161.7	1784	11371
1805	8.27	26.86	137.8	1954	11706
2020	9.99	24.89	114.1	2109	11930
2170	11.09	24.10	102.8	2177	11956
2240	13.32	20.70	85.6	2445	13061
2310	16.09	17.67	70.8	2684	14302
2310	17.85	15.93	63.9	2823	15244
2310	19.85	14.33	57.4	2951	16239
2310	21.44	13.26	53.2	3036	16988
2385	23.97	12.25	47.6	3117	17712
2385	25.89	11.34	44.0	3190	18508
2385	28.73	10.22	39.7	3279	19612
2730	30.72	10.94	37.1	3354	20734
2730	34.20	9.83	33.3	3429	21942
2390	38.45	7.65	29.6	3576	22000
2820	41.30	8.41	27.6	3526	22000
2820	45.82	7.58	24.9	3582	22000
2820	51.52	6.74	22.1	3638	22000

IH103

Mn_2 [Nm]	i	Pn_1 [kW]	n2 [rpm]	Fr1 [N]	Fr2 [N]
2990	55.47	6.78	20.6	3645	22000
2985	69.69	5.39	16.4	3736	22000
2990	79.82	4.71	14.3	3781	22000
2990	84.16	4.47	13.6	3797	22000
2990	93.36	4.03	12.2	3826	22000
2985	100.07	3.75	11.4	3844	22000
2990	120.84	3.11	9.4	3887	22000
2985	134.06	2.80	8.5	3907	22000
2990	143.42	2.62	8.0	3919	22000
2985	160.82	2.33	7.1	3937	22000
2985	181.07	2.07	6.3	3955	22000
2990	194.21	1.94	5.9	3964	22000
2985	215.45	1.74	5.3	3977	22000
2610	242.59	1.35	4.7	3986	22000

IH121

Mn_2 [Nm]	i	Pn_1 [kW]	n2 [rpm]	Fr1 [N]	Fr2 [N]
189	1.23	18.70	926.2	792	3666
255	1.42	21.90	804.7	994	3798

5.4 IH/IHA GEAR REDUCER - 1140 RPM

IH121

Mn_2 [Nm]	i	Pn_1 [kW]	n2 [rpm]	Fr1 [N]	Fr2 [N]
412	1.81	27.80	631.1	1628	4257
496	2.00	30.20	570.0	1703	4343
680	2.48	33.41	459.7	2014	4680
680	2.95	28.04	385.9	2322	5074
700	3.14	27.14	362.7	2381	5171
725	3.58	24.68	318.5	2520	5415
725	4.12	21.45	276.9	2705	5769
740	4.80	18.78	237.5	2855	6000
750	5.21	17.53	218.6	2929	6000
765	6.25	14.92	182.4	3076	6000
850	7.70	13.45	148.1	3160	6000

IH122

Mn_2 [Nm]	i	Pn_1 [kW]	n2 [rpm]	Fr1 [N]	Fr2 [N]
1791	5.27	41.80	216.1	697	16577
1876	5.78	40.00	197.4	783	16729
2044	7.05	35.70	161.7	1037	17284
2616	7.74	41.60	147.2	1229	17880
2726	8.48	39.60	134.5	1402	18473
2890	10.35	34.39	110.2	1764	19943
3180	12.66	30.92	90.0	1993	20932
3325	13.86	29.53	82.2	2085	21359
3470	16.92	25.25	67.4	2367	23209
3615	19.32	23.03	59.0	2513	24314
3615	20.57	21.63	55.4	2605	25176
3610	22.52	19.73	50.6	2728	26455
3615	24.47	18.19	46.6	2832	27657
3615	27.49	16.19	41.5	2964	29406
3610	29.86	14.88	38.2	3048	30000
4270	33.00	15.93	34.5	3141	30000
4270	36.13	14.55	31.6	3218	30000
4270	44.10	11.92	25.9	3365	30000

IH123

Mn_2 [Nm]	i	Pn_1 [kW]	n2 [rpm]	Fr1 [N]	Fr2 [N]
4270	45.77	11.73	24.9	3389	30000
4270	55.87	9.61	20.4	3505	30000
4270	67.32	7.97	16.9	3594	30000
4270	73.71	7.28	15.5	3632	30000
4270	83.34	6.44	13.7	3678	30000
4270	89.97	5.97	12.7	3704	30000

5.4 IH/IHA GEAR REDUCER - 1140 RPM

IH123

Mn_2 [Nm]	i	Pn_1 [kW]	n2 [rpm]	Fr1 [N]	Fr2 [N]
4275	100.29	5.36	11.4	3737	30000
4270	108.34	4.96	10.5	3759	30000
4270	118.62	4.53	9.6	3782	30000
4270	128.18	4.19	8.9	3801	30000
4275	144.79	3.71	7.9	3827	30000
4265	155.22	3.45	7.3	3840	30000
4270	172.80	3.11	6.6	3860	30000
4270	189.19	2.84	6.0	3874	30000
4270	207.43	2.59	5.5	3888	30000
4275	230.92	2.33	4.9	3902	30000

IH142

Mn_2 [Nm]	i	Pn_1 [kW]	n2 [rpm]	Fr1 [N]	Fr2 [N]
2528	5.27	59.00	216.1	4966	21055
2757	6.36	53.40	179.4	5610	22389
2866	7.04	50.10	161.9	5999	23386
3758	7.84	59.00	145.4	6216	23880
4099	9.45	53.40	120.6	6140	22773
4236	10.47	49.80	108.8	6142	22114
5275	13.07	49.68	87.2	6963	25197
5640	15.75	44.09	72.4	7366	26714
5710	17.45	40.28	65.3	7638	28172
5780	20.04	35.50	56.9	7978	30336
5780	24.15	29.47	47.2	8410	33854
5780	26.76	26.59	42.6	8616	35889
6835	32.24	26.10	35.4	8940	39759
6835	38.85	21.66	29.3	9208	43880
6835	43.05	19.54	26.5	9337	46264

IH143

Mn_2 [Nm]	i	Pn_1 [kW]	n2 [rpm]	Fr1 [N]	Fr2 [N]
6835	48.35	17.78	23.6	9466	49054
6835	53.53	16.06	21.3	9568	51593
6835	59.22	14.51	19.2	9659	54200
6835	62.99	13.64	18.1	9711	55000
6835	71.35	12.04	16.0	9806	55000
6835	79.07	10.87	14.4	9876	55000
6830	86.43	9.94	13.2	9930	55000
6835	96.21	8.93	11.8	9990	55000
6835	104.51	8.22	10.9	10032	55000
6830	115.92	7.41	9.8	10080	55000

5.4 IH/IHA GEAR REDUCER - 1140 RPM

IH143

Mn_2 [Nm]	i	Pn_1 [kW]	n2 [rpm]	Fr1 [N]	Fr2 [N]
6835	128.47	6.69	8.9	10123	55000
6835	139.55	6.16	8.2	10155	55000
6830	154.33	5.56	7.4	10190	55000
6835	185.96	4.62	6.1	10246	55000
6830	206.08	4.17	5.5	10273	55000

5.5 IH/IHA GEAR REDUCER - 900 RPM

IHA32

Mn_2 [Nm]	i	Pn_1 [kW]	n2 [rpm]	Fr1 [N]	Fr2 [N]
58	5.38	1.05	167.3	330	1270
58	6.52	0.86	138.1	409	1354
54	8.11	0.65	111.0	373	1457
65	10.94	0.58	82.3	441	1609
58	13.25	0.43	67.9	363	1716
58	16.49	0.34	54.6	398	1845
65	20.26	0.31	44.4	453	1976
61	24.55	0.24	36.7	386	2000
68	30.55	0.22	29.5	374	2000
77	35.44	0.21	25.4	480	2000
77	44.10	0.17	20.4	398	2000
68	48.75	0.14	18.5	398	2000
81	60.67	0.13	14.8	472	2000

IHA33

Mn_2 [Nm]	i	Pn_1 [kW]	n2 [rpm]	Fr1 [N]	Fr2 [N]
84	51.32	0.16	17.5	472	2000
85	59.65	0.14	15.1	472	2000
87	72.27	0.12	12.4	472	2000
84	89.94	0.09	10.0	472	2000
85	110.51	0.08	8.1	472	2000
88	133.88	0.07	6.7	472	2000
82	166.61	0.05	5.4	472	2000
85	193.30	0.04	4.7	472	2000
79	240.55	0.03	3.7	472	2000
92	279.07	0.03	3.2	472	2000
76	347.29	0.02	2.6	472	2000

IHA41

Mn_2 [Nm]	i	Pn_1 [kW]	n2 [rpm]	Fr1 [N]	Fr2 [N]
21	1.45	1.39	621.4	330	593
21	2.94	0.69	305.7	330	751
26	4.75	0.53	189.5	330	881
26	5.45	0.46	165.0	330	922
21	7.88	0.26	114.3	330	1042
17	10.83	0.15	83.1	330	1100

5.5 IH/IHA GEAR REDUCER - 900 RPM

IHA42

Mn_2 [Nm]	i	Pn_1 [kW]	n2 [rpm]	Fr1 [N]	Fr2 [N]
101	5.38	1.82	167.3	330	2674
101	6.52	1.51	138.1	409	2851
94	8.11	1.13	111.0	369	3067
108	10.94	0.96	82.3	424	3388
101	13.25	0.74	67.9	381	3612
101	16.49	0.60	54.6	398	3885
108	20.26	0.52	44.4	432	4161
112	24.55	0.44	36.7	422	4300
120	30.55	0.38	29.5	359	4300
128	35.44	0.35	25.4	457	4300
120	44.10	0.26	20.4	371	4300
111	48.75	0.22	18.5	416	4300
120	60.67	0.19	14.8	428	4300

IHA43

Mn_2 [Nm]	i	Pn_1 [kW]	n2 [rpm]	Fr1 [N]	Fr2 [N]
129	51.32	0.25	17.5	427	4300
127	59.65	0.21	15.1	426	4300
127	72.27	0.17	12.4	409	4300
128	89.94	0.14	10.0	398	4300
127	110.51	0.11	8.1	403	4300
125	133.88	0.09	6.7	409	4300
128	166.61	0.08	5.4	398	4300
127	193.30	0.07	4.7	427	4300
132	240.55	0.05	3.7	398	4300
122	279.07	0.04	3.2	427	4300
133	347.29	0.04	2.6	398	4300

IHA51

Mn_2 [Nm]	i	Pn_1 [kW]	n2 [rpm]	Fr1 [N]	Fr2 [N]
34	1.45	2.26	621.4	330	1634
34	2.94	1.11	305.7	330	2069
43	4.75	0.87	189.5	330	2427
43	5.45	0.76	165.0	330	2542
34	7.88	0.42	114.3	330	2873
21	10.83	0.19	83.1	330	3000

5.5 IH/IHA GEAR REDUCER - 900 RPM

IHA52

Mn_2 [Nm]	i	Pn_1 [kW]	n2 [rpm]	Fr1 [N]	Fr2 [N]
173	5.14	3.27	175.0	550	3293
173	6.22	2.70	144.6	682	3509
173	7.73	2.17	116.4	664	3773
216	9.64	2.18	93.3	827	4061
202	11.67	1.68	77.1	636	4327
202	14.50	1.35	62.1	664	4652
216	16.91	1.24	53.2	758	4897
208	20.46	0.99	44.0	659	5218
202	25.43	0.77	35.4	641	5610
216	29.89	0.70	30.1	752	5921
256	36.17	0.69	24.9	682	6000
238	44.95	0.51	20.0	620	6000
256	49.78	0.50	18.1	798	6000
246	61.87	0.39	14.6	642	6000

IHA53

Mn_2 [Nm]	i	Pn_1 [kW]	n2 [rpm]	Fr1 [N]	Fr2 [N]
256	49.80	0.51	18.1	330	6000
256	60.25	0.42	14.9	409	6000
254	74.88	0.34	12.0	398	6000
254	88.02	0.29	10.2	421	6000
256	111.61	0.23	8.1	390	6000
258	138.71	0.18	6.5	398	6000
258	163.05	0.16	5.5	421	6000
252	200.27	0.12	4.5	403	6000
256	235.41	0.11	3.8	421	6000
248	284.81	0.09	3.2	409	6000
252	353.98	0.07	2.5	398	6000

IHA61

Mn_2 [Nm]	i	Pn_1 [kW]	n2 [rpm]	Fr1 [N]	Fr2 [N]
77	1.33	5.56	675.0	550	2379
77	2.50	2.96	360.0	550	2933
94	4.38	2.06	205.3	550	3537
77	7.75	0.96	116.1	550	4277
60	10.67	0.54	84.4	550	4500

5.5 IH/IHA GEAR REDUCER - 900 RPM

IHA62

Mn_2 [Nm]	i	Pn_1 [kW]	n2 [rpm]	Fr1 [N]	Fr2 [N]
274	5.14	5.18	175.0	550	4861
274	6.22	4.28	144.6	682	5179
274	7.73	3.44	116.4	664	5569
332	9.64	3.35	93.3	801	5994
318	11.67	2.65	77.1	652	6387
302	14.50	2.02	62.1	634	6867
360	16.91	2.07	53.2	842	7228
332	20.46	1.58	44.0	627	7702
310	25.43	1.18	35.4	621	8000
324	29.89	1.05	30.1	734	8000
400	36.17	1.07	24.9	712	8000
376	44.95	0.81	20.0	621	8000
316	49.78	0.62	18.1	626	8000
376	61.87	0.59	14.6	789	8000

IHA63

Mn_2 [Nm]	i	Pn_1 [kW]	n2 [rpm]	Fr1 [N]	Fr2 [N]
408	49.80	0.81	18.1	330	8000
408	60.25	0.67	14.9	409	8000
410	74.88	0.54	12.0	398	8000
408	88.02	0.46	10.2	421	8000
408	111.61	0.36	8.1	390	8000
410	138.71	0.29	6.5	398	8000
410	163.05	0.25	5.5	421	8000
406	200.27	0.20	4.5	403	8000
412	235.41	0.17	3.8	421	8000
404	284.81	0.14	3.2	409	8000
406	353.98	0.11	2.5	398	8000

IH032

Mn_2 [Nm]	i	Pn_1 [kW]	n2 [rpm]	Fr1 [N]	Fr2 [N]
69	4.70	1.43	191.7	665	3578
76	6.23	1.19	144.5	788	3925
90	7.76	1.13	115.9	815	4093
94	8.87	1.03	101.5	868	4285
101	10.14	0.97	88.7	900	4438
105	11.76	0.87	76.5	953	4685
123	13.72	0.87	65.6	951	4742
123	14.66	0.82	61.4	980	4889
137	16.77	0.79	53.7	990	4980
145	18.20	0.77	49.5	1002	5066

5.5 IH/IHA GEAR REDUCER - 900 RPM

IH032

Mn_2 [Nm]	i	Pn_1 [kW]	n2 [rpm]	Fr1 [N]	Fr2 [N]
145	19.90	0.71	45.2	1037	5285
145	22.68	0.62	39.7	1082	5500
145	23.83	0.59	37.8	1097	5500
145	26.39	0.53	34.1	1127	5500
146	29.70	0.48	30.3	1158	5500
171	32.89	0.51	27.4	1182	5500
171	37.92	0.44	23.7	1211	5500
171	41.40	0.40	21.7	1227	5500
171	47.25	0.35	19.1	1249	5500

IH033

Mn_2 [Nm]	i	Pn_1 [kW]	n2 [rpm]	Fr1 [N]	Fr2 [N]
170	53.59	0.31	16.8	1267	5500
172	66.78	0.26	13.5	1294	5500
172	74.84	0.23	12.0	1306	5500
169	99.27	0.17	9.1	1330	5500
172	108.05	0.16	8.3	1336	5500
169	123.71	0.14	7.3	1345	5500
173	143.33	0.12	6.3	1353	5500
166	178.61	0.09	5.0	1363	5500
173	197.17	0.09	4.6	1367	5500
175	245.70	0.07	3.7	1374	5500

IH041

Mn_2 [Nm]	i	Pn_1 [kW]	n2 [rpm]	Fr1 [N]	Fr2 [N]
21	1.44	1.41	626.1	977	699
21	2.00	1.01	450.0	1087	794
26	2.55	0.98	353.6	1104	847
26	2.71	0.92	331.6	1120	868
34	3.11	1.05	289.8	1079	866
38	3.59	1.02	250.8	1087	894
38	4.20	0.87	214.3	1128	954
38	5.00	0.73	180.0	1167	1000
43	5.50	0.75	163.6	1164	1000
43	6.09	0.68	147.8	1184	1000
43	7.67	0.54	117.4	1223	1000
47	8.75	0.52	102.9	1228	1000

5.5 IH/IHA GEAR REDUCER - 900 RPM

IH042

Mn_2 [Nm]	i	Pn_1 [kW]	n2 [rpm]	Fr1 [N]	Fr2 [N]
116	5.46	2.06	164.8	384	4643
116	7.19	1.57	125.2	635	5221
152	8.91	1.66	101.0	588	5278
173	10.31	1.63	87.3	599	5371
181	11.80	1.49	76.3	673	5626
181	13.57	1.30	66.3	772	5998
181	15.96	1.10	56.4	870	6452
181	19.00	0.93	47.4	959	6600
181	21.00	0.84	42.9	1004	6600
188	23.15	0.79	38.9	1028	6600
188	26.04	0.70	34.6	1073	6600
202	27.50	0.71	32.7	1065	6600
238	30.45	0.76	29.6	1101	6600
238	34.10	0.68	26.4	1136	6600
238	37.76	0.61	23.8	1164	6600
238	43.75	0.53	20.6	1200	6600
238	47.53	0.49	18.9	1218	6600
238	54.25	0.43	16.6	1244	6600

IH043

Mn_2 [Nm]	i	Pn_1 [kW]	n2 [rpm]	Fr1 [N]	Fr2 [N]
256	61.83	0.41	14.6	1256	6600
256	76.67	0.33	11.7	1289	6600
256	87.05	0.29	10.3	1306	6600
256	114.55	0.22	7.9	1335	6600
256	125.69	0.20	7.2	1343	6600
256	142.04	0.18	6.3	1353	6600
256	165.38	0.15	5.4	1364	6600
256	205.07	0.12	4.4	1376	6600
256	227.50	0.11	4.0	1381	6600
256	282.10	0.09	3.2	1391	6600

IH051

Mn_2 [Nm]	i	Pn_1 [kW]	n2 [rpm]	Fr1 [N]	Fr2 [N]
34	1.27	2.57	707.1	797	1737
51	1.42	3.46	634.1	591	1717
51	2.13	2.31	423.5	858	2003
60	2.57	2.24	350.0	877	2107
68	3.17	2.07	284.2	914	2236
77	3.69	2.01	244.1	930	2326
77	4.00	1.85	225.0	966	2401

5.5 IH/IHA GEAR REDUCER - 900 RPM

IH051

Mn_2 [Nm]	i	Pn_1 [kW]	n2 [rpm]	Fr1 [N]	Fr2 [N]
81	4.77	1.63	188.7	1015	2500
85	5.25	1.56	171.4	1032	2500
85	5.82	1.41	154.7	1067	2500
85	7.33	1.11	122.7	1135	2500
86	8.38	0.99	107.5	1167	2500

IH052

Mn_2 [Nm]	i	Pn_1 [kW]	n2 [rpm]	Fr1 [N]	Fr2 [N]
188	5.73	3.19	157.1	202	5759
208	6.89	2.93	130.6	290	6032
244	8.53	2.78	105.5	348	6274
266	9.56	2.70	94.1	379	6401
280	11.51	2.36	78.2	506	6834
310	14.24	2.12	63.2	603	7256
324	16.59	1.90	54.2	684	7654
332	18.00	1.79	50.0	725	7881
332	19.97	1.62	45.1	792	8000
338	21.67	1.52	41.5	827	8000
338	24.71	1.33	36.4	897	8000
354	26.18	1.31	34.4	905	8000
354	28.44	1.21	31.6	945	8000
418	31.52	1.29	28.6	989	8000
418	33.00	1.23	27.3	1007	8000
418	38.98	1.04	23.1	1067	8000
418	45.36	0.90	19.8	1114	8000
418	49.13	0.83	18.3	1136	8000
418	56.11	0.72	16.0	1168	8000

IH053

Mn_2 [Nm]	i	Pn_1 [kW]	n2 [rpm]	Fr1 [N]	Fr2 [N]
428	58.81	0.72	15.3	1174	8000
426	72.75	0.58	12.4	1217	8000
426	90.51	0.47	9.9	1253	8000
428	108.95	0.39	8.3	1278	8000
428	134.76	0.32	6.7	1301	8000
430	157.29	0.27	5.7	1315	8000
426	194.56	0.22	4.6	1331	8000
426	216.38	0.20	4.2	1338	8000
424	267.65	0.16	3.4	1349	8000

5.5 IH/IHA GEAR REDUCER - 900 RPM

IH061

Mn_2 [Nm]	i	Pn_1 [kW]	n2 [rpm]	Fr1 [N]	Fr2 [N]
68	1.34	4.87	669.8	2050	2603
103	2.13	4.66	423.5	2098	2873
102	2.57	3.82	350.0	2250	3108
111	3.17	3.37	284.2	2338	3323
128	3.69	3.34	244.1	2343	3417
128	4.00	3.08	225.0	2393	3536
137	4.77	2.76	188.7	2454	3700
145	5.25	2.66	171.4	2472	3700
145	5.82	2.40	154.7	2522	3700
145	7.33	1.90	122.7	2615	3700
145	8.38	1.67	107.5	2660	3700

IH062

Mn_2 [Nm]	i	Pn_1 [kW]	n2 [rpm]	Fr1 [N]	Fr2 [N]
360	5.38	6.51	167.4	753	9322
396	5.93	6.49	151.7	761	9432
396	7.39	5.21	121.8	1171	10402
432	8.50	4.94	105.9	1257	10753
434	9.39	4.49	95.9	1406	11238
470	11.69	3.91	77.0	1593	12000
505	12.67	3.88	71.0	1601	12000
505	14.75	3.33	61.0	1776	12000
575	16.29	3.43	55.3	1739	12000
600	17.67	3.30	50.9	1787	12000
610	20.28	2.92	44.4	1901	12000
610	23.27	2.55	38.7	2022	12000
610	25.70	2.31	35.0	2099	12000
576	29.33	1.91	30.7	2229	12000
725	32.00	2.20	28.1	2245	12000
680	36.99	1.79	24.3	2356	12000
725	40.33	1.75	22.3	2369	12000
725	46.06	1.53	19.5	2427	12000

IH063

Mn_2 [Nm]	i	Pn_1 [kW]	n2 [rpm]	Fr1 [N]	Fr2 [N]
725	49.45	1.46	18.2	2456	12000
725	54.61	1.32	16.5	2492	12000
725	68.00	1.06	13.2	2561	12000
720	85.82	0.83	10.5	2619	12000
725	94.76	0.76	9.5	2640	12000
720	118.00	0.61	7.6	2680	12000

5.5 IH/IHA GEAR REDUCER - 900 RPM

IH063

Mn_2 [Nm]	i	Pn_1 [kW]	n2 [rpm]	Fr1 [N]	Fr2 [N]
725	135.40	0.53	6.7	2701	12000
725	149.51	0.48	6.0	2714	12000
725	170.67	0.42	5.3	2730	12000
720	186.18	0.38	4.8	2739	12000
730	215.21	0.34	4.2	2753	12000
720	234.67	0.30	3.8	2760	12000
715	268.00	0.26	3.4	2770	12000

IH081

Mn_2 [Nm]	i	Pn_1 [kW]	n2 [rpm]	Fr1 [N]	Fr2 [N]
143	1.30	10.60	693.8	817	2771
188	1.43	12.66	630.0	819	2804
196	1.93	9.76	466.1	1322	3157
238	2.54	9.01	354.1	1451	3341
264	3.25	7.81	276.9	1664	3600
264	3.72	6.82	241.8	1839	3828
272	4.00	6.54	225.0	1886	3910
272	4.67	5.61	192.9	2051	4000
282	5.54	4.90	162.5	2180	4000
290	6.08	4.59	147.9	2233	4000
298	7.50	3.82	120.0	2366	4000
298	8.44	3.39	106.6	2442	4000

IH082

Mn_2 [Nm]	i	Pn_1 [kW]	n2 [rpm]	Fr1 [N]	Fr2 [N]
505	5.39	9.11	167.0	706	11651
505	5.95	8.25	151.4	922	12152
575	7.39	7.56	121.7	1091	12841
575	8.02	6.97	112.2	1241	13300
650	8.85	7.14	101.7	1206	13391
795	11.01	7.02	81.8	1237	13766
1010	13.50	7.27	66.7	1170	13667
1080	14.90	7.05	60.4	1223	13866
1080	16.62	6.32	54.2	1408	14648
1080	18.53	5.67	48.6	1573	15455
1155	19.38	5.79	46.4	1545	15320
1155	21.39	5.25	42.1	1682	16087
1155	22.80	4.92	39.5	1764	16598
1155	26.60	4.22	33.8	1942	17879
1155	27.88	4.03	32.3	1991	18000
1365	31.15	4.26	28.9	2098	18000

5.5 IH/IHA GEAR REDUCER - 900 RPM

IH082

Mn_2 [Nm]	i	Pn_1 [kW]	n2 [rpm]	Fr1 [N]	Fr2 [N]
1365	34.38	3.86	26.2	2183	18000
1365	38.70	3.43	23.2	2275	18000
1365	42.75	3.10	21.1	2345	18000
1365	48.13	2.76	18.7	2419	18000

IH083

Mn_2 [Nm]	i	Pn_1 [kW]	n2 [rpm]	Fr1 [N]	Fr2 [N]
1365	56.53	2.40	15.9	2506	18000
1535	71.48	2.13	12.6	2562	18000
1535	78.87	1.93	11.4	2604	18000
1535	85.56	1.78	10.5	2635	18000
1535	98.09	1.55	9.2	2683	18000
1535	112.78	1.35	8.0	2725	18000
1540	124.44	1.23	7.2	2752	18000
1530	142.15	1.07	6.3	2784	18000
1530	154.76	0.98	5.8	2802	18000
1535	162.35	0.94	5.5	2812	18000
1540	179.13	0.85	5.0	2830	18000
1535	195.07	0.78	4.6	2845	18000
1535	222.78	0.68	4.0	2865	18000

IH101

Mn_2 [Nm]	i	Pn_1 [kW]	n2 [rpm]	Fr1 [N]	Fr2 [N]
266	1.29	19.80	696.2	1709	3386
358	1.41	24.40	638.2	1638	3384
384	2.03	18.18	442.9	2350	3978
468	2.48	18.14	362.7	2349	4067
510	3.27	14.99	275.0	2628	4468
510	3.70	13.26	243.2	2782	4722
520	4.22	11.85	213.2	2911	4980
530	4.88	10.46	184.6	3037	5000
530	5.27	9.68	170.9	3106	5000
545	6.23	8.41	144.4	3215	5000
555	7.55	7.08	119.3	3336	5000
555	8.40	6.36	107.1	3400	5000

IH102

Mn_2 [Nm]	i	Pn_1 [kW]	n2 [rpm]	Fr1 [N]	Fr2 [N]
1300	5.26	24.01	171.0	1613	12767

5.5 IH/IHA GEAR REDUCER - 900 RPM

IH102

Mn_2 [Nm]	i	Pn_1 [kW]	n2 [rpm]	Fr1 [N]	Fr2 [N]
1445	6.36	22.10	141.6	1811	13264
1660	7.05	22.88	127.6	1727	12817
1805	8.27	21.20	108.8	1902	13225
2020	9.99	19.65	90.1	2061	13535
2170	11.09	19.03	81.2	2130	13608
2240	13.32	16.34	67.5	2405	14826
2310	16.09	13.95	55.9	2650	16191
2310	17.85	12.58	50.4	2792	17209
2310	19.85	11.31	45.3	2923	18287
2310	21.44	10.47	42.0	3010	19096
2385	23.97	9.67	37.5	3094	19902
2385	25.89	8.95	34.8	3168	20764
2385	28.73	8.07	31.3	3259	21958
2730	30.72	8.64	29.3	3337	22000
2730	34.20	7.76	26.3	3413	22000
2390	38.45	6.04	23.4	3564	22000
2820	41.30	6.64	21.8	3512	22000
2820	45.82	5.98	19.6	3569	22000
2820	51.52	5.32	17.5	3627	22000

IH103

Mn_2 [Nm]	i	Pn_1 [kW]	n2 [rpm]	Fr1 [N]	Fr2 [N]
2990	55.47	5.35	16.2	3634	22000
2985	69.69	4.25	12.9	3727	22000
2990	79.82	3.72	11.3	3774	22000
2990	84.16	3.53	10.7	3790	22000
2990	93.36	3.18	9.6	3820	22000
2985	100.07	2.96	9.0	3838	22000
2990	120.84	2.46	7.5	3882	22000
2985	134.06	2.21	6.7	3902	22000
2990	143.42	2.07	6.3	3915	22000
2985	160.82	1.84	5.6	3934	22000
2985	181.07	1.64	5.0	3951	22000
2990	194.21	1.53	4.6	3961	22000
2985	215.45	1.38	4.2	3974	22000
2610	242.59	1.07	3.7	3984	22000

IH121

Mn_2 [Nm]	i	Pn_1 [kW]	n2 [rpm]	Fr1 [N]	Fr2 [N]
239	1.23	18.70	731.2	716	4054
323	1.42	21.90	635.3	923	4204

5.5 IH/IHA GEAR REDUCER - 900 RPM

IH121

Mn_2 [Nm]	i	Pn_1 [kW]	n2 [rpm]	Fr1 [N]	Fr2 [N]
522	1.81	27.80	498.2	1572	4700
628	2.00	30.20	450.0	1648	4801
680	2.48	26.38	362.9	1968	5171
680	2.95	22.14	304.6	2283	5597
700	3.14	21.42	286.4	2343	5706
725	3.58	19.49	251.5	2486	5973
725	4.12	16.94	218.6	2675	6000
740	4.80	14.83	187.5	2828	6000
750	5.21	13.84	172.6	2905	6000
765	6.25	11.78	144.0	3055	6000
850	7.70	10.62	116.9	3141	6000

IH122

Mn_2 [Nm]	i	Pn_1 [kW]	n2 [rpm]	Fr1 [N]	Fr2 [N]
2165	5.27	39.89	170.6	616	18507
2315	5.78	38.96	155.8	703	18709
2589	7.05	35.70	127.7	964	19385
2670	7.74	33.52	116.2	1161	20049
2745	8.48	31.48	106.2	1338	20710
2890	10.35	27.15	87.0	1709	22339
3180	12.66	24.41	71.1	1944	23484
3325	13.86	23.31	64.9	2038	23985
3470	16.92	19.93	53.2	2327	26025
3615	19.32	18.19	46.6	2476	27258
3615	20.57	17.08	43.8	2570	28191
3610	22.52	15.58	40.0	2697	29575
3615	24.47	14.36	36.8	2803	30000
3615	27.49	12.78	32.7	2938	30000
3610	29.86	11.75	30.1	3024	30000
4270	33.00	12.58	27.3	3120	30000
4270	36.13	11.49	24.9	3199	30000
4270	44.10	9.41	20.4	3349	30000

IH123

Mn_2 [Nm]	i	Pn_1 [kW]	n2 [rpm]	Fr1 [N]	Fr2 [N]
4270	45.77	9.26	19.7	3374	30000
4270	55.87	7.59	16.1	3492	30000
4270	67.32	6.30	13.4	3583	30000
4270	73.71	5.75	12.2	3622	30000
4270	83.34	5.09	10.8	3669	30000
4270	89.97	4.71	10.0	3696	30000

5.5 IH/IHA GEAR REDUCER - 900 RPM

IH123

Mn_2 [Nm]	i	Pn_1 [kW]	n2 [rpm]	Fr1 [N]	Fr2 [N]
4275	100.29	4.23	9.0	3730	30000
4270	108.34	3.91	8.3	3752	30000
4270	118.62	3.57	7.6	3776	30000
4270	128.18	3.31	7.0	3795	30000
4275	144.79	2.93	6.2	3822	30000
4265	155.22	2.73	5.8	3836	30000
4270	172.80	2.45	5.2	3855	30000
4270	189.19	2.24	4.8	3871	30000
4270	207.43	2.04	4.3	3884	30000
4275	230.92	1.84	3.9	3899	30000

IH142

Mn_2 [Nm]	i	Pn_1 [kW]	n2 [rpm]	Fr1 [N]	Fr2 [N]
3202	5.27	59.00	170.6	4831	23594
3492	6.36	53.40	141.6	5490	25090
3610	7.04	49.82	127.8	5889	26187
3830	7.84	47.46	114.8	6111	26774
4700	9.45	48.34	95.2	6033	25788
5200	10.47	48.26	85.9	6035	25199
5275	13.07	39.22	68.8	6877	28552
5640	15.75	34.81	57.1	7289	30282
5710	17.45	31.80	51.6	7567	31876
5780	20.04	28.03	44.9	7916	34236
5780	24.15	23.26	37.3	8359	38042
5780	26.76	20.99	33.6	8570	40244
6835	32.24	20.60	27.9	8901	44431
6835	38.85	17.10	23.2	9176	48891
6835	43.05	15.43	20.9	9308	51470

IH143

Mn_2 [Nm]	i	Pn_1 [kW]	n2 [rpm]	Fr1 [N]	Fr2 [N]
6835	48.35	14.03	18.6	9440	54488
6835	53.53	12.68	16.8	9545	55000
6835	59.22	11.46	15.2	9638	55000
6835	62.99	10.77	14.3	9691	55000
6835	71.35	9.51	12.6	9788	55000
6835	79.07	8.58	11.4	9860	55000
6830	86.43	7.84	10.4	9916	55000
6835	96.21	7.05	9.3	9977	55000
6835	104.51	6.49	8.6	10020	55000
6830	115.92	5.85	7.8	10070	55000

5.5 IH/IHA GEAR REDUCER - 900 RPM

IH143

Mn_2 [Nm]	i	Pn_1 [kW]	n2 [rpm]	Fr1 [N]	Fr2 [N]
6835	128.47	5.28	7.0	10114	55000
6835	139.55	4.86	6.5	10146	55000
6830	154.33	4.39	5.8	10182	55000
6835	185.96	3.65	4.8	10239	55000
6830	206.08	3.29	4.4	10267	55000

5.6 IH/IHA GEAR REDUCER - 700 RPM

IHA32

Mn_2 [Nm]	i	Pn_1 [kW]	n2 [rpm]	Fr1 [N]	Fr2 [N]
58	5.38	0.81	130.1	330	1381
58	6.52	0.67	107.4	409	1473
54	8.11	0.50	86.3	373	1584
65	10.94	0.45	64.0	441	1750
58	13.25	0.33	52.8	363	1865
58	16.49	0.26	42.5	398	2000
65	20.26	0.24	34.5	453	2000
61	24.55	0.19	28.5	386	2000
68	30.55	0.17	22.9	374	2000
77	35.44	0.16	19.8	480	2000
77	44.10	0.13	15.9	398	2000
68	48.75	0.10	14.4	398	2000
81	60.67	0.10	11.5	472	2000

IHA33

Mn_2 [Nm]	i	Pn_1 [kW]	n2 [rpm]	Fr1 [N]	Fr2 [N]
84	51.32	0.13	13.6	472	2000
85	59.65	0.11	11.7	472	2000
87	72.27	0.09	9.7	472	2000
84	89.94	0.07	7.8	472	2000
85	110.51	0.06	6.3	472	2000
88	133.88	0.05	5.2	472	2000
82	166.61	0.04	4.2	472	2000
85	193.30	0.03	3.6	472	2000
79	240.55	0.03	2.9	472	2000
92	279.07	0.03	2.5	472	2000
76	347.29	0.02	2.0	472	2000

IHA41

Mn_2 [Nm]	i	Pn_1 [kW]	n2 [rpm]	Fr1 [N]	Fr2 [N]
21	1.45	1.08	483.3	330	645
21	2.94	0.53	237.7	330	817
26	4.75	0.41	147.4	330	958
26	5.45	0.35	128.3	330	1003
21	7.88	0.20	88.9	330	1100
17	10.83	0.12	64.6	330	1100

5.6 IH/IHA GEAR REDUCER - 700 RPM

IHA42

Mn_2 [Nm]	i	Pn_1 [kW]	n2 [rpm]	Fr1 [N]	Fr2 [N]
101	5.38	1.41	130.1	330	2908
101	6.52	1.17	107.4	409	3100
94	8.11	0.87	86.3	369	3334
108	10.94	0.74	64.0	424	3684
101	13.25	0.57	52.8	381	3927
101	16.49	0.46	42.5	398	4224
108	20.26	0.40	34.5	432	4300
112	24.55	0.34	28.5	422	4300
120	30.55	0.30	22.9	359	4300
128	35.44	0.27	19.8	457	4300
120	44.10	0.20	15.9	371	4300
111	48.75	0.17	14.4	416	4300
120	60.67	0.15	11.5	428	4300

IHA43

Mn_2 [Nm]	i	Pn_1 [kW]	n2 [rpm]	Fr1 [N]	Fr2 [N]
129	51.32	0.19	13.6	427	4300
127	59.65	0.16	11.7	426	4300
127	72.27	0.13	9.7	409	4300
128	89.94	0.11	7.8	398	4300
127	110.51	0.09	6.3	403	4300
125	133.88	0.07	5.2	409	4300
128	166.61	0.06	4.2	398	4300
127	193.30	0.05	3.6	427	4300
132	240.55	0.04	2.9	398	4300
122	279.07	0.03	2.5	427	4300
133	347.29	0.03	2.0	398	4300

IHA51

Mn_2 [Nm]	i	Pn_1 [kW]	n2 [rpm]	Fr1 [N]	Fr2 [N]
34	1.45	1.75	483.3	330	1776
34	2.94	0.86	237.7	330	2250
43	4.75	0.67	147.4	330	2639
43	5.45	0.59	128.3	330	2764
34	7.88	0.32	88.9	330	3000
21	10.83	0.14	64.6	330	3000

5.6 IH/IHA GEAR REDUCER - 700 RPM

IHA52

Mn_2 [Nm]	i	Pn_1 [kW]	n2 [rpm]	Fr1 [N]	Fr2 [N]
173	5.14	2.53	136.1	550	3581
173	6.22	2.09	112.5	682	3816
173	7.73	1.68	90.5	664	4103
216	9.64	1.69	72.6	827	4416
202	11.67	1.30	60.0	636	4705
202	14.50	1.05	48.3	664	5059
216	16.91	0.96	41.4	758	5325
208	20.46	0.76	34.2	659	5674
202	25.43	0.60	27.5	641	6000
216	29.89	0.54	23.4	752	6000
256	36.17	0.53	19.4	682	6000
238	44.95	0.40	15.6	620	6000
256	49.78	0.39	14.1	798	6000
246	61.87	0.30	11.3	642	6000

IHA53

Mn_2 [Nm]	i	Pn_1 [kW]	n2 [rpm]	Fr1 [N]	Fr2 [N]
256	49.80	0.39	14.1	330	6000
256	60.25	0.33	11.6	409	6000
254	74.88	0.26	9.3	398	6000
254	88.02	0.22	8.0	421	6000
256	111.61	0.18	6.3	390	6000
258	138.71	0.14	5.0	398	6000
258	163.05	0.12	4.3	421	6000
252	200.27	0.10	3.5	403	6000
256	235.41	0.08	3.0	421	6000
248	284.81	0.07	2.5	409	6000
252	353.98	0.05	2.0	398	6000

IHA61

Mn_2 [Nm]	i	Pn_1 [kW]	n2 [rpm]	Fr1 [N]	Fr2 [N]
77	1.33	4.30	525.0	550	2586
77	2.50	2.29	280.0	550	3189
94	4.38	1.60	159.7	550	3846
77	7.75	0.74	90.3	550	4500
60	10.67	0.42	65.6	550	4500

5.6 IH/IHA GEAR REDUCER - 700 RPM

IHA62

Mn_2 [Nm]	i	Pn_1 [kW]	n2 [rpm]	Fr1 [N]	Fr2 [N]
274	5.14	4.01	136.1	550	5285
274	6.22	3.31	112.5	682	5632
274	7.73	2.67	90.5	664	6055
332	9.64	2.59	72.6	801	6518
318	11.67	2.05	60.0	652	6945
302	14.50	1.57	48.3	634	7467
360	16.91	1.60	41.4	842	7860
332	20.46	1.22	34.2	627	8000
310	25.43	0.92	27.5	621	8000
324	29.89	0.82	23.4	734	8000
400	36.17	0.83	19.4	712	8000
376	44.95	0.63	15.6	621	8000
316	49.78	0.48	14.1	626	8000
376	61.87	0.46	11.3	789	8000

IHA63

Mn_2 [Nm]	i	Pn_1 [kW]	n2 [rpm]	Fr1 [N]	Fr2 [N]
408	49.80	0.63	14.1	330	8000
408	60.25	0.52	11.6	409	8000
410	74.88	0.42	9.3	398	8000
408	88.02	0.36	8.0	421	8000
408	111.61	0.28	6.3	390	8000
410	138.71	0.23	5.0	398	8000
410	163.05	0.19	4.3	421	8000
406	200.27	0.16	3.5	403	8000
412	235.41	0.13	3.0	421	8000
404	284.81	0.11	2.5	409	8000
406	353.98	0.09	2.0	398	8000

IH032

Mn_2 [Nm]	i	Pn_1 [kW]	n2 [rpm]	Fr1 [N]	Fr2 [N]
69	4.70	1.11	149.1	656	3969
76	6.23	0.92	112.4	781	4355
90	7.76	0.87	90.2	808	4553
94	8.87	0.80	79.0	862	4767
101	10.14	0.75	69.0	894	4941
105	11.76	0.67	59.5	948	5214
123	13.72	0.67	51.0	946	5297
123	14.66	0.63	47.8	975	5457
137	16.77	0.61	41.8	985	5500
145	18.20	0.60	38.5	998	5500

5.6 IH/IHA GEAR REDUCER - 700 RPM

IH032

Mn_2 [Nm]	i	Pn_1 [kW]	n2 [rpm]	Fr1 [N]	Fr2 [N]
145	19.90	0.55	35.2	1032	5500
145	22.68	0.48	30.9	1078	5500
145	23.83	0.46	29.4	1094	5500
145	26.39	0.41	26.5	1124	5500
146	29.70	0.37	23.6	1155	5500
171	32.89	0.39	21.3	1179	5500
171	37.92	0.34	18.5	1209	5500
171	41.40	0.31	16.9	1225	5500
171	47.25	0.27	14.8	1247	5500

IH033

Mn_2 [Nm]	i	Pn_1 [kW]	n2 [rpm]	Fr1 [N]	Fr2 [N]
170	53.59	0.24	13.1	1266	5500
172	66.78	0.20	10.5	1293	5500
172	74.84	0.18	9.3	1305	5500
169	99.27	0.13	7.0	1329	5500
172	108.05	0.12	6.5	1335	5500
169	123.71	0.10	5.7	1344	5500
173	143.33	0.09	4.9	1352	5500
166	178.61	0.07	3.9	1362	5500
173	197.17	0.07	3.5	1366	5500
175	245.70	0.05	2.9	1374	5500

IH041

Mn_2 [Nm]	i	Pn_1 [kW]	n2 [rpm]	Fr1 [N]	Fr2 [N]
21	1.44	1.09	487.0	972	769
21	2.00	0.78	350.0	1084	873
26	2.55	0.76	275.0	1100	932
26	2.71	0.71	257.9	1117	955
34	3.11	0.82	225.4	1075	956
38	3.59	0.79	195.1	1083	989
38	4.20	0.67	166.7	1125	1000
38	5.00	0.57	140.0	1164	1000
43	5.50	0.58	127.3	1162	1000
43	6.09	0.53	114.9	1182	1000
43	7.67	0.42	91.3	1221	1000
47	8.75	0.40	80.0	1226	1000

5.6 IH/IHA GEAR REDUCER - 700 RPM

IH042

Mn_2 [Nm]	i	Pn_1 [kW]	n2 [rpm]	Fr1 [N]	Fr2 [N]
116	5.46	1.60	128.2	372	5154
116	7.19	1.21	97.4	625	5783
152	8.91	1.28	78.5	578	5877
173	10.31	1.26	67.9	589	5998
181	11.80	1.15	59.3	664	6282
181	13.57	1.00	51.6	764	6600
181	15.96	0.85	43.9	863	6600
181	19.00	0.72	36.8	954	6600
181	21.00	0.65	33.3	999	6600
188	23.15	0.61	30.2	1023	6600
188	26.04	0.54	26.9	1068	6600
202	27.50	0.55	25.4	1061	6600
238	30.45	0.59	23.0	1097	6600
238	34.10	0.53	20.5	1132	6600
238	37.76	0.47	18.5	1161	6600
238	43.75	0.41	16.0	1198	6600
238	47.53	0.38	14.7	1216	6600
238	54.25	0.33	12.9	1242	6600

IH043

Mn_2 [Nm]	i	Pn_1 [kW]	n2 [rpm]	Fr1 [N]	Fr2 [N]
256	61.83	0.32	11.3	1253	6600
256	76.67	0.26	9.1	1287	6600
256	87.05	0.23	8.0	1304	6600
256	114.55	0.17	6.1	1334	6600
256	125.69	0.16	5.6	1342	6600
256	142.04	0.14	4.9	1352	6600
256	165.38	0.12	4.2	1363	6600
256	205.07	0.10	3.4	1376	6600
256	227.50	0.09	3.1	1381	6600
256	282.10	0.07	2.5	1390	6600

IH051

Mn_2 [Nm]	i	Pn_1 [kW]	n2 [rpm]	Fr1 [N]	Fr2 [N]
34	1.27	1.99	550.0	790	1902
51	1.42	2.68	493.2	582	1887
51	2.13	1.79	329.4	851	2199
60	2.57	1.74	272.2	871	2315
68	3.17	1.60	221.1	908	2459
77	3.69	1.55	189.8	925	2500
77	4.00	1.43	175.0	961	2500

5.6 IH/IHA GEAR REDUCER - 700 RPM

IH051

Mn_2 [Nm]	i	Pn_1 [kW]	n2 [rpm]	Fr1 [N]	Fr2 [N]
81	4.77	1.26	146.8	1011	2500
85	5.25	1.21	133.3	1028	2500
85	5.82	1.09	120.3	1063	2500
85	7.33	0.86	95.5	1132	2500
86	8.38	0.76	83.6	1164	2500

IH052

Mn_2 [Nm]	i	Pn_1 [kW]	n2 [rpm]	Fr1 [N]	Fr2 [N]
188	5.73	2.47	122.2	188	6400
208	6.89	2.27	101.5	277	6713
244	8.53	2.15	82.1	336	7002
266	9.56	2.09	73.2	367	7156
280	11.51	1.83	60.8	495	7637
310	14.24	1.64	49.2	593	8000
324	16.59	1.47	42.2	675	8000
332	18.00	1.39	38.9	717	8000
332	19.97	1.25	35.0	784	8000
338	21.67	1.17	32.3	820	8000
338	24.71	1.03	28.3	891	8000
354	26.18	1.02	26.7	900	8000
354	28.44	0.94	24.6	939	8000
418	31.52	1.00	22.2	984	8000
418	33.00	0.95	21.2	1003	8000
418	38.98	0.81	18.0	1063	8000
418	45.36	0.69	15.4	1111	8000
418	49.13	0.64	14.2	1133	8000
418	56.11	0.56	12.5	1166	8000

IH053

Mn_2 [Nm]	i	Pn_1 [kW]	n2 [rpm]	Fr1 [N]	Fr2 [N]
428	58.81	0.56	11.9	1172	8000
426	72.75	0.45	9.6	1215	8000
426	90.51	0.36	7.7	1251	8000
428	108.95	0.30	6.4	1276	8000
428	134.76	0.24	5.2	1300	8000
430	157.29	0.21	4.5	1314	8000
426	194.56	0.17	3.6	1330	8000
426	216.38	0.15	3.2	1337	8000
424	267.65	0.12	2.6	1349	8000

5.6 IH/IHA GEAR REDUCER - 700 RPM

IH061

Mn_2 [Nm]	i	Pn_1 [kW]	n2 [rpm]	Fr1 [N]	Fr2 [N]
68	1.34	3.77	520.9	2039	2866
103	2.13	3.61	329.4	2088	3178
102	2.57	2.95	272.2	2242	3434
111	3.17	2.61	221.1	2330	3672
128	3.69	2.58	189.8	2336	3700
128	4.00	2.38	175.0	2386	3700
137	4.77	2.14	146.8	2448	3700
145	5.25	2.06	133.3	2466	3700
145	5.82	1.86	120.3	2516	3700
145	7.33	1.47	95.5	2611	3700
145	8.38	1.29	83.6	2656	3700

IH062

Mn_2 [Nm]	i	Pn_1 [kW]	n2 [rpm]	Fr1 [N]	Fr2 [N]
360	5.38	5.04	130.2	728	10367
396	5.93	5.02	118.0	736	10510
396	7.39	4.03	94.7	1151	11565
432	8.50	3.82	82.3	1238	11970
434	9.39	3.48	74.6	1389	12000
470	11.69	3.03	59.9	1578	12000
505	12.67	3.00	55.3	1586	12000
505	14.75	2.58	47.5	1763	12000
575	16.29	2.66	43.0	1726	12000
600	17.67	2.55	39.6	1774	12000
610	20.28	2.26	34.5	1890	12000
610	23.27	1.97	30.1	2012	12000
610	25.70	1.79	27.2	2090	12000
576	29.33	1.48	23.9	2222	12000
725	32.00	1.70	21.9	2238	12000
680	36.99	1.38	18.9	2350	12000
725	40.33	1.35	17.4	2363	12000
725	46.06	1.18	15.2	2422	12000

IH063

Mn_2 [Nm]	i	Pn_1 [kW]	n2 [rpm]	Fr1 [N]	Fr2 [N]
725	49.45	1.13	14.2	2451	12000
725	54.61	1.02	12.8	2488	12000
725	68.00	0.82	10.3	2558	12000
720	85.82	0.64	8.2	2617	12000
725	94.76	0.59	7.4	2638	12000
720	118.00	0.47	5.9	2678	12000

5.6 IH/IHA GEAR REDUCER - 700 RPM

IH063

Mn_2 [Nm]	i	Pn_1 [kW]	n2 [rpm]	Fr1 [N]	Fr2 [N]
725	135.40	0.41	5.2	2699	12000
725	149.51	0.37	4.7	2712	12000
725	170.67	0.33	4.1	2728	12000
720	186.18	0.30	3.8	2738	12000
730	215.21	0.26	3.2	2752	12000
720	234.67	0.24	3.0	2759	12000
715	268.00	0.20	2.6	2770	12000

IH081

Mn_2 [Nm]	i	Pn_1 [kW]	n2 [rpm]	Fr1 [N]	Fr2 [N]
171	1.30	9.81	539.6	790	3077
188	1.43	9.80	490.0	793	3120
196	1.93	7.56	362.5	1302	3506
238	2.54	6.97	275.4	1432	3722
264	3.25	6.05	215.4	1648	4000
264	3.72	5.28	188.1	1824	4000
272	4.00	5.06	175.0	1872	4000
272	4.67	4.34	150.0	2039	4000
282	5.54	3.79	126.4	2170	4000
290	6.08	3.55	115.1	2224	4000
298	7.50	2.96	93.3	2358	4000
298	8.44	2.63	82.9	2435	4000

IH082

Mn_2 [Nm]	i	Pn_1 [kW]	n2 [rpm]	Fr1 [N]	Fr2 [N]
505	5.39	7.05	129.9	679	12923
505	5.95	6.39	117.7	897	13467
575	7.39	5.85	94.7	1068	14253
575	8.02	5.39	87.3	1219	14752
650	8.85	5.52	79.1	1184	14887
795	11.01	5.43	63.6	1216	15367
1010	13.50	5.63	51.9	1148	15368
1080	14.90	5.45	47.0	1202	15622
1080	16.62	4.89	42.1	1389	16471
1080	18.53	4.39	37.8	1556	17349
1155	19.38	4.48	36.1	1528	17238
1155	21.39	4.06	32.7	1667	18000
1155	22.80	3.81	30.7	1750	18000
1155	26.60	3.27	26.3	1929	18000
1155	27.88	3.12	25.1	1979	18000
1365	31.15	3.30	22.5	2087	18000

5.6 IH/IHA GEAR REDUCER - 700 RPM

IH082

Mn_2 [Nm]	i	Pn_1 [kW]	n2 [rpm]	Fr1 [N]	Fr2 [N]
1365	34.38	2.99	20.4	2173	18000
1365	38.70	2.65	18.1	2267	18000
1365	42.75	2.40	16.4	2337	18000
1365	48.13	2.13	14.5	2412	18000

IH083

Mn_2 [Nm]	i	Pn_1 [kW]	n2 [rpm]	Fr1 [N]	Fr2 [N]
1365	56.53	1.86	12.4	2500	18000
1535	71.48	1.65	9.8	2556	18000
1535	78.87	1.50	8.9	2599	18000
1535	85.56	1.38	8.2	2631	18000
1535	98.09	1.20	7.1	2679	18000
1535	112.78	1.05	6.2	2722	18000
1540	124.44	0.95	5.6	2749	18000
1530	142.15	0.83	4.9	2781	18000
1530	154.76	0.76	4.5	2799	18000
1535	162.35	0.73	4.3	2809	18000
1540	179.13	0.66	3.9	2828	18000
1535	195.07	0.60	3.6	2843	18000
1535	222.78	0.53	3.1	2863	18000

IH101

Mn_2 [Nm]	i	Pn_1 [kW]	n2 [rpm]	Fr1 [N]	Fr2 [N]
340	1.29	19.58	541.5	1682	3763
384	1.41	20.27	496.4	1611	3770
384	2.03	14.07	344.4	2331	4416
468	2.48	14.04	282.1	2329	4533
510	3.27	11.60	213.9	2612	4980
510	3.70	10.26	189.2	2768	5000
520	4.22	9.17	165.8	2899	5000
530	4.88	8.09	143.6	3026	5000
530	5.27	7.49	132.9	3096	5000
545	6.23	6.51	112.3	3207	5000
555	7.55	5.48	92.8	3329	5000
555	8.40	4.92	83.3	3393	5000

IH102

Mn_2 [Nm]	i	Pn_1 [kW]	n2 [rpm]	Fr1 [N]	Fr2 [N]
1300	5.26	18.58	133.0	1583	14423

5.6 IH/IHA GEAR REDUCER - 700 RPM

IH102

Mn_2 [Nm]	i	Pn_1 [kW]	n2 [rpm]	Fr1 [N]	Fr2 [N]
1445	6.36	17.10	110.1	1784	15024
1660	7.05	17.71	99.3	1699	14628
1805	8.27	16.41	84.6	1876	15132
2020	9.99	15.21	70.1	2036	15559
2170	11.09	14.73	63.1	2107	15698
2240	13.32	12.65	52.5	2385	17053
2310	16.09	10.80	43.5	2633	18567
2310	17.85	9.73	39.2	2777	19675
2310	19.85	8.75	35.3	2909	20846
2310	21.44	8.10	32.6	2997	21727
2385	23.97	7.49	29.2	3082	22000
2385	25.89	6.93	27.0	3157	22000
2385	28.73	6.25	24.4	3249	22000
2730	30.72	6.68	22.8	3328	22000
2730	34.20	6.00	20.5	3405	22000
2390	38.45	4.68	18.2	3557	22000
2820	41.30	5.14	16.9	3505	22000
2820	45.82	4.63	15.3	3563	22000
2820	51.52	4.12	13.6	3622	22000

IH103

Mn_2 [Nm]	i	Pn_1 [kW]	n2 [rpm]	Fr1 [N]	Fr2 [N]
2990	55.47	4.14	12.6	3629	22000
2985	69.69	3.29	10.0	3723	22000
2990	79.82	2.88	8.8	3770	22000
2990	84.16	2.73	8.3	3786	22000
2990	93.36	2.46	7.5	3817	22000
2985	100.07	2.29	7.0	3835	22000
2990	120.84	1.90	5.8	3879	22000
2985	134.06	1.71	5.2	3900	22000
2990	143.42	1.60	4.9	3912	22000
2985	160.82	1.43	4.3	3932	22000
2985	181.07	1.27	3.9	3950	22000
2990	194.21	1.18	3.6	3959	22000
2985	215.45	1.06	3.2	3972	22000
2610	242.59	0.83	2.9	3983	22000

IH121

Mn_2 [Nm]	i	Pn_1 [kW]	n2 [rpm]	Fr1 [N]	Fr2 [N]
309	1.23	18.70	568.8	677	4526
417	1.42	21.90	494.1	887	4698

5.6 IH/IHA GEAR REDUCER - 700 RPM

IH121

Mn_2 [Nm]	i	Pn_1 [kW]	n2 [rpm]	Fr1 [N]	Fr2 [N]
595	1.81	24.52	387.5	1544	5238
640	2.00	23.82	350.0	1621	5356
680	2.48	20.41	282.3	1944	5768
680	2.95	17.13	236.9	2264	6000
700	3.14	16.58	222.7	2324	6000
725	3.58	15.08	195.6	2469	6000
725	4.12	13.11	170.0	2660	6000
740	4.80	11.48	145.8	2815	6000
750	5.21	10.71	134.2	2892	6000
765	6.25	9.11	112.0	3045	6000
850	7.70	8.22	90.9	3132	6000

IH122

Mn_2 [Nm]	i	Pn_1 [kW]	n2 [rpm]	Fr1 [N]	Fr2 [N]
2165	5.27	30.88	132.7	575	20890
2315	5.78	30.15	121.2	664	21161
2600	7.05	27.75	99.3	927	21998
2670	7.74	25.94	90.4	1127	22745
2745	8.48	24.36	82.6	1306	23489
2890	10.35	21.01	67.7	1681	25312
3180	12.66	18.89	55.3	1919	26660
3325	13.86	18.04	50.5	2014	27255
3470	16.92	15.43	41.4	2306	29524
3615	19.32	14.07	36.2	2457	30000
3615	20.57	13.22	34.0	2553	30000
3610	22.52	12.06	31.1	2681	30000
3615	24.47	11.11	28.6	2788	30000
3615	27.49	9.89	25.5	2925	30000
3610	29.86	9.09	23.4	3012	30000
4270	33.00	9.73	21.2	3109	30000
4270	36.13	8.89	19.4	3189	30000
4270	44.10	7.28	15.9	3341	30000

IH123

Mn_2 [Nm]	i	Pn_1 [kW]	n2 [rpm]	Fr1 [N]	Fr2 [N]
4270	45.77	7.17	15.3	3366	30000
4270	55.87	5.87	12.5	3486	30000
4270	67.32	4.87	10.4	3578	30000
4270	73.71	4.45	9.5	3617	30000
4270	83.34	3.94	8.4	3665	30000
4270	89.97	3.65	7.8	3692	30000

5.6 IH/IHA GEAR REDUCER - 700 RPM

IH123

Mn_2 [Nm]	i	Pn_1 [kW]	n2 [rpm]	Fr1 [N]	Fr2 [N]
4275	100.29	3.27	7.0	3726	30000
4270	108.34	3.03	6.5	3749	30000
4270	118.62	2.77	5.9	3773	30000
4270	128.18	2.56	5.5	3792	30000
4275	144.79	2.27	4.8	3819	30000
4265	155.22	2.11	4.5	3834	30000
4270	172.80	1.90	4.0	3853	30000
4270	189.19	1.73	3.7	3869	30000
4270	207.43	1.58	3.4	3883	30000
4275	230.92	1.42	3.0	3898	30000

IH142

Mn_2 [Nm]	i	Pn_1 [kW]	n2 [rpm]	Fr1 [N]	Fr2 [N]
3320	5.27	47.35	132.7	4763	26746
3545	6.36	41.96	110.1	5430	28444
3610	7.04	38.56	99.4	5834	29660
3830	7.84	36.74	89.2	6059	30370
4700	9.45	37.41	74.1	5979	29582
5200	10.47	37.35	66.8	5982	29108
5275	13.07	30.36	53.5	6833	32777
5640	15.75	26.94	44.4	7251	34777
5710	17.45	24.61	40.1	7532	36535
5780	20.04	21.69	34.9	7885	39125
5780	24.15	18.00	29.0	8333	43263
5780	26.76	16.25	26.1	8547	45657
6835	32.24	15.95	21.7	8882	50210
6835	38.85	13.23	18.0	9160	55000
6835	43.05	11.94	16.3	9293	55000

IH143

Mn_2 [Nm]	i	Pn_1 [kW]	n2 [rpm]	Fr1 [N]	Fr2 [N]
6835	48.35	10.86	14.5	9428	55000
6835	53.53	9.81	13.1	9533	55000
6835	59.22	8.87	11.8	9628	55000
6835	62.99	8.34	11.1	9681	55000
6835	71.35	7.36	9.8	9780	55000
6835	79.07	6.64	8.8	9852	55000
6830	86.43	6.07	8.1	9909	55000
6835	96.21	5.46	7.3	9971	55000
6835	104.51	5.02	6.7	10014	55000
6830	115.92	4.53	6.0	10064	55000

5.6 IH/IHA GEAR REDUCER - 700 RPM

IH143

Mn_2 [Nm]	i	Pn_1 [kW]	n2 [rpm]	Fr1 [N]	Fr2 [N]
6835	128.47	4.09	5.5	10109	55000
6835	139.55	3.76	5.0	10141	55000
6830	154.33	3.40	4.5	10178	55000
6835	185.96	2.82	3.8	10236	55000
6830	206.08	2.55	3.4	10264	55000

5.7 IH/IHA GEAR REDUCER - 500 RPM

IHA32

Mn_2 [Nm]	i	Pn_1 [kW]	n2 [rpm]	Fr1 [N]	Fr2 [N]
58	5.38	0.58	93.0	330	1545
58	6.52	0.48	76.7	409	1647
54	8.11	0.36	61.6	373	1772
65	10.94	0.32	45.7	441	1958
58	13.25	0.23	37.7	363	2000
58	16.49	0.19	30.3	398	2000
65	20.26	0.17	24.7	453	2000
61	24.55	0.13	20.4	386	2000
68	30.55	0.12	16.4	374	2000
77	35.44	0.12	14.1	480	2000
77	44.10	0.09	11.3	398	2000
68	48.75	0.07	10.3	398	2000
81	60.67	0.07	8.2	472	2000

IHA33

Mn_2 [Nm]	i	Pn_1 [kW]	n2 [rpm]	Fr1 [N]	Fr2 [N]
84	51.32	0.09	9.7	472	2000
85	59.65	0.08	8.4	472	2000
87	72.27	0.07	6.9	472	2000
84	89.94	0.05	5.6	472	2000
85	110.51	0.04	4.5	472	2000
88	133.88	0.04	3.7	472	2000
82	166.61	0.03	3.0	472	2000
85	193.30	0.02	2.6	472	2000
79	240.55	0.02	2.1	472	2000
92	279.07	0.02	1.8	472	2000
76	347.29	0.01	1.4	472	2000

IHA41

Mn_2 [Nm]	i	Pn_1 [kW]	n2 [rpm]	Fr1 [N]	Fr2 [N]
21	1.45	0.77	345.2	330	721
21	2.94	0.38	169.8	330	914
26	4.75	0.29	105.3	330	1071
26	5.45	0.25	91.7	330	1100
21	7.88	0.14	63.5	330	1100
17	10.83	0.08	46.1	330	1100

5.7 IH/IHA GEAR REDUCER - 500 RPM

IHA42

Mn_2 [Nm]	i	Pn_1 [kW]	n2 [rpm]	Fr1 [N]	Fr2 [N]
101	5.38	1.00	93.0	330	3253
101	6.52	0.83	76.7	409	3468
94	8.11	0.62	61.6	369	3730
108	10.94	0.53	45.7	424	4121
101	13.25	0.41	37.7	381	4300
101	16.49	0.33	30.3	398	4300
108	20.26	0.29	24.7	432	4300
112	24.55	0.24	20.4	422	4300
120	30.55	0.21	16.4	359	4300
128	35.44	0.19	14.1	457	4300
120	44.10	0.15	11.3	371	4300
111	48.75	0.12	10.3	416	4300
120	60.67	0.11	8.2	428	4300

IHA43

Mn_2 [Nm]	i	Pn_1 [kW]	n2 [rpm]	Fr1 [N]	Fr2 [N]
129	51.32	0.14	9.7	427	4300
127	59.65	0.12	8.4	426	4300
127	72.27	0.10	6.9	409	4300
128	89.94	0.08	5.6	398	4300
127	110.51	0.06	4.5	403	4300
125	133.88	0.05	3.7	409	4300
128	166.61	0.04	3.0	398	4300
127	193.30	0.04	2.6	427	4300
132	240.55	0.03	2.1	398	4300
122	279.07	0.02	1.8	427	4300
133	347.29	0.02	1.4	398	4300

IHA51

Mn_2 [Nm]	i	Pn_1 [kW]	n2 [rpm]	Fr1 [N]	Fr2 [N]
34	1.45	1.24	345.2	330	1987
34	2.94	0.61	169.8	330	2517
43	4.75	0.48	105.3	330	2952
43	5.45	0.42	91.7	330	3000
34	7.88	0.23	63.5	330	3000
21	10.83	0.10	46.1	330	3000

5.7 IH/IHA GEAR REDUCER - 500 RPM

IHA52

Mn_2 [Nm]	i	Pn_1 [kW]	n2 [rpm]	Fr1 [N]	Fr2 [N]
173	5.14	1.80	97.2	550	4006
173	6.22	1.49	80.4	682	4269
173	7.73	1.20	64.7	664	4589
216	9.64	1.20	51.9	827	4940
202	11.67	0.93	42.9	636	5264
202	14.50	0.74	34.5	664	5659
216	16.91	0.68	29.6	758	5957
208	20.46	0.54	24.4	659	6000
202	25.43	0.42	19.7	641	6000
216	29.89	0.39	16.7	752	6000
256	36.17	0.38	13.8	682	6000
238	44.95	0.28	11.1	620	6000
256	49.78	0.27	10.0	798	6000
246	61.87	0.21	8.1	642	6000

IHA53

Mn_2 [Nm]	i	Pn_1 [kW]	n2 [rpm]	Fr1 [N]	Fr2 [N]
256	49.80	0.28	10.0	330	6000
256	60.25	0.23	8.3	409	6000
254	74.88	0.19	6.7	398	6000
254	88.02	0.16	5.7	421	6000
256	111.61	0.13	4.5	390	6000
258	138.71	0.10	3.6	398	6000
258	163.05	0.09	3.1	421	6000
252	200.27	0.07	2.5	403	6000
256	235.41	0.06	2.1	421	6000
248	284.81	0.05	1.8	409	6000
252	353.98	0.04	1.4	398	6000

IHA61

Mn_2 [Nm]	i	Pn_1 [kW]	n2 [rpm]	Fr1 [N]	Fr2 [N]
77	1.33	3.06	375.0	550	2893
77	2.50	1.63	200.0	550	3568
94	4.38	1.13	114.0	550	4303
77	7.75	0.53	64.5	550	4500
60	10.67	0.30	46.9	550	4500

5.7 IH/IHA GEAR REDUCER - 500 RPM

IHA62

Mn_2 [Nm]	i	Pn_1 [kW]	n2 [rpm]	Fr1 [N]	Fr2 [N]
274	5.14	2.85	97.2	550	5913
274	6.22	2.35	80.4	682	6300
274	7.73	1.89	64.7	664	6774
332	9.64	1.84	51.9	801	7291
318	11.67	1.46	42.9	652	7769
302	14.50	1.11	34.5	634	8000
360	16.91	1.14	29.6	842	8000
332	20.46	0.87	24.4	627	8000
310	25.43	0.65	19.7	621	8000
324	29.89	0.58	16.7	734	8000
400	36.17	0.59	13.8	712	8000
376	44.95	0.45	11.1	621	8000
316	49.78	0.34	10.0	626	8000
376	61.87	0.32	8.1	789	8000

IHA63

Mn_2 [Nm]	i	Pn_1 [kW]	n2 [rpm]	Fr1 [N]	Fr2 [N]
408	49.80	0.45	10.0	330	8000
408	60.25	0.37	8.3	409	8000
410	74.88	0.30	6.7	398	8000
408	88.02	0.25	5.7	421	8000
408	111.61	0.20	4.5	390	8000
410	138.71	0.16	3.6	398	8000
410	163.05	0.14	3.1	421	8000
406	200.27	0.11	2.5	403	8000
412	235.41	0.10	2.1	421	8000
404	284.81	0.08	1.8	409	8000
406	353.98	0.06	1.4	398	8000

IH032

Mn_2 [Nm]	i	Pn_1 [kW]	n2 [rpm]	Fr1 [N]	Fr2 [N]
69	4.70	0.79	106.5	647	4553
76	6.23	0.65	80.3	773	4995
90	7.76	0.62	64.4	801	5241
94	8.87	0.57	56.4	855	5486
101	10.14	0.53	49.3	888	5500
105	11.76	0.48	42.5	943	5500
123	13.72	0.48	36.4	940	5500
123	14.66	0.45	34.1	970	5500
137	16.77	0.44	29.8	980	5500
145	18.20	0.43	27.5	993	5500

5.7 IH/IHA GEAR REDUCER - 500 RPM

IH032

Mn_2 [Nm]	i	Pn_1 [kW]	n2 [rpm]	Fr1 [N]	Fr2 [N]
145	19.90	0.39	25.1	1028	5500
145	22.68	0.34	22.1	1074	5500
145	23.83	0.33	21.0	1090	5500
145	26.39	0.29	18.9	1120	5500
146	29.70	0.26	16.8	1152	5500
171	32.89	0.28	15.2	1176	5500
171	37.92	0.24	13.2	1207	5500
171	41.40	0.22	12.1	1223	5500
171	47.25	0.19	10.6	1245	5500

IH033

Mn_2 [Nm]	i	Pn_1 [kW]	n2 [rpm]	Fr1 [N]	Fr2 [N]
170	53.59	0.17	9.3	1264	5500
172	66.78	0.14	7.5	1292	5500
172	74.84	0.13	6.7	1304	5500
169	99.27	0.09	5.0	1328	5500
172	108.05	0.09	4.6	1335	5500
169	123.71	0.07	4.0	1343	5500
173	143.33	0.07	3.5	1352	5500
166	178.61	0.05	2.8	1362	5500
173	197.17	0.05	2.5	1366	5500
175	245.70	0.04	2.0	1373	5500

IH041

Mn_2 [Nm]	i	Pn_1 [kW]	n2 [rpm]	Fr1 [N]	Fr2 [N]
21	1.44	0.77	347.8	968	874
21	2.00	0.56	250.0	1081	990
26	2.55	0.54	196.4	1097	1000
26	2.71	0.51	184.2	1114	1000
34	3.11	0.58	161.0	1072	1000
38	3.59	0.56	139.3	1080	1000
38	4.20	0.48	119.0	1122	1000
38	5.00	0.40	100.0	1162	1000
43	5.50	0.41	90.9	1160	1000
43	6.09	0.37	82.1	1180	1000
43	7.67	0.30	65.2	1219	1000
47	8.75	0.28	57.1	1224	1000

5.7 IH/IHA GEAR REDUCER - 500 RPM

IH042

Mn_2 [Nm]	i	Pn_1 [kW]	n2 [rpm]	Fr1 [N]	Fr2 [N]
116	5.46	1.14	91.5	359	5916
116	7.19	0.86	69.6	616	6600
152	8.91	0.91	56.1	568	6600
173	10.31	0.90	48.5	579	6600
181	11.80	0.82	42.4	655	6600
181	13.57	0.71	36.8	756	6600
181	15.96	0.61	31.3	857	6600
181	19.00	0.51	26.3	948	6600
181	21.00	0.46	23.8	994	6600
188	23.15	0.43	21.6	1018	6600
188	26.04	0.39	19.2	1064	6600
202	27.50	0.39	18.2	1057	6600
238	30.45	0.42	16.4	1093	6600
238	34.10	0.37	14.7	1129	6600
238	37.76	0.34	13.2	1158	6600
238	43.75	0.29	11.4	1195	6600
238	47.53	0.27	10.5	1213	6600
238	54.25	0.23	9.2	1240	6600

IH043

Mn_2 [Nm]	i	Pn_1 [kW]	n2 [rpm]	Fr1 [N]	Fr2 [N]
256	61.83	0.23	8.1	1251	6600
256	76.67	0.18	6.5	1286	6600
256	87.05	0.16	5.7	1303	6600
256	114.55	0.12	4.4	1333	6600
256	125.69	0.11	4.0	1341	6600
256	142.04	0.10	3.5	1351	6600
256	165.38	0.08	3.0	1362	6600
256	205.07	0.07	2.4	1375	6600
256	227.50	0.06	2.2	1380	6600
256	282.10	0.05	1.8	1390	6600

IH051

Mn_2 [Nm]	i	Pn_1 [kW]	n2 [rpm]	Fr1 [N]	Fr2 [N]
34	1.27	1.41	392.9	783	2148
51	1.42	1.90	352.3	572	2141
51	2.13	1.27	235.3	845	2490
60	2.57	1.23	194.4	865	2500
68	3.17	1.14	157.9	903	2500
77	3.69	1.10	135.6	919	2500
77	4.00	1.02	125.0	956	2500

5.7 IH/IHA GEAR REDUCER - 500 RPM

IH051

Mn_2 [Nm]	i	Pn_1 [kW]	n2 [rpm]	Fr1 [N]	Fr2 [N]
81	4.77	0.90	104.8	1006	2500
85	5.25	0.86	95.2	1023	2500
85	5.82	0.77	85.9	1060	2500
85	7.33	0.61	68.2	1128	2500
86	8.38	0.54	59.7	1161	2500

IH052

Mn_2 [Nm]	i	Pn_1 [kW]	n2 [rpm]	Fr1 [N]	Fr2 [N]
188	5.73	1.76	87.3	174	7357
208	6.89	1.61	72.5	264	7730
244	8.53	1.53	58.6	323	8000
266	9.56	1.49	52.3	355	8000
280	11.51	1.30	43.4	485	8000
310	14.24	1.16	35.1	584	8000
324	16.59	1.04	30.1	667	8000
332	18.00	0.99	27.8	709	8000
332	19.97	0.89	25.0	777	8000
338	21.67	0.83	23.1	813	8000
338	24.71	0.73	20.2	885	8000
354	26.18	0.72	19.1	894	8000
354	28.44	0.67	17.6	934	8000
418	31.52	0.71	15.9	979	8000
418	33.00	0.68	15.2	998	8000
418	38.98	0.57	12.8	1059	8000
418	45.36	0.49	11.0	1107	8000
418	49.13	0.45	10.2	1129	8000
418	56.11	0.40	8.9	1163	8000

IH053

Mn_2 [Nm]	i	Pn_1 [kW]	n2 [rpm]	Fr1 [N]	Fr2 [N]
428	58.81	0.40	8.5	1169	8000
426	72.75	0.32	6.9	1213	8000
426	90.51	0.26	5.5	1249	8000
428	108.95	0.21	4.6	1275	8000
428	134.76	0.17	3.7	1298	8000
430	157.29	0.15	3.2	1313	8000
426	194.56	0.12	2.6	1329	8000
426	216.38	0.11	2.3	1336	8000
424	267.65	0.09	1.9	1348	8000

5.7 IH/IHA GEAR REDUCER - 500 RPM

IH061

Mn_2 [Nm]	i	Pn_1 [kW]	n2 [rpm]	Fr1 [N]	Fr2 [N]
68	1.34	2.68	372.1	2028	3258
103	2.13	2.56	235.3	2077	3632
102	2.57	2.10	194.4	2233	3700
111	3.17	1.85	157.9	2322	3700
128	3.69	1.84	135.6	2328	3700
128	4.00	1.69	125.0	2379	3700
137	4.77	1.52	104.8	2442	3700
145	5.25	1.46	95.2	2460	3700
145	5.82	1.32	85.9	2511	3700
145	7.33	1.05	68.2	2607	3700
145	8.38	0.92	59.7	2653	3700

IH062

Mn_2 [Nm]	i	Pn_1 [kW]	n2 [rpm]	Fr1 [N]	Fr2 [N]
360	5.38	3.58	93.0	703	11929
396	5.93	3.57	84.2	712	12000
396	7.39	2.86	67.7	1131	12000
432	8.50	2.72	58.8	1219	12000
434	9.39	2.47	53.3	1372	12000
470	11.69	2.15	42.8	1563	12000
505	12.67	2.13	39.5	1571	12000
505	14.75	1.83	33.9	1751	12000
575	16.29	1.89	30.7	1713	12000
600	17.67	1.82	28.3	1762	12000
610	20.28	1.61	24.6	1878	12000
610	23.27	1.40	21.5	2002	12000
610	25.70	1.27	19.5	2081	12000
576	29.33	1.05	17.1	2215	12000
725	32.00	1.21	15.6	2231	12000
680	36.99	0.98	13.5	2345	12000
725	40.33	0.96	12.4	2357	12000
725	46.06	0.84	10.8	2417	12000

IH063

Mn_2 [Nm]	i	Pn_1 [kW]	n2 [rpm]	Fr1 [N]	Fr2 [N]
725	49.45	0.80	10.1	2447	12000
725	54.61	0.72	9.2	2484	12000
725	68.00	0.58	7.3	2554	12000
720	85.82	0.46	5.8	2614	12000
725	94.76	0.42	5.3	2635	12000
720	118.00	0.33	4.2	2676	12000

5.7 IH/IHA GEAR REDUCER - 500 RPM

IH063

Mn_2 [Nm]	i	Pn_1 [kW]	n2 [rpm]	Fr1 [N]	Fr2 [N]
725	135.40	0.29	3.7	2697	12000
725	149.51	0.26	3.3	2711	12000
725	170.67	0.23	2.9	2727	12000
720	186.18	0.21	2.7	2737	12000
730	215.21	0.19	2.3	2751	12000
720	234.67	0.17	2.1	2758	12000
715	268.00	0.15	1.9	2769	12000

IH081

Mn_2 [Nm]	i	Pn_1 [kW]	n2 [rpm]	Fr1 [N]	Fr2 [N]
171	1.30	6.98	385.4	764	3534
188	1.43	6.96	350.0	766	3591
196	1.93	5.37	258.9	1281	4000
238	2.54	4.96	196.7	1413	4000
264	3.25	4.30	153.8	1631	4000
264	3.72	3.75	134.3	1810	4000
272	4.00	3.60	125.0	1858	4000
272	4.67	3.08	107.1	2027	4000
282	5.54	2.69	90.3	2160	4000
290	6.08	2.52	82.2	2214	4000
298	7.50	2.10	66.7	2350	4000
298	8.44	1.87	59.2	2427	4000

IH082

Mn_2 [Nm]	i	Pn_1 [kW]	n2 [rpm]	Fr1 [N]	Fr2 [N]
505	5.39	5.01	92.8	651	14821
505	5.95	4.54	84.1	872	15430
575	7.39	4.16	67.6	1045	16361
575	8.02	3.83	62.3	1198	16918
650	8.85	3.93	56.5	1163	17122
795	11.01	3.86	45.4	1195	17763
1010	13.50	4.00	37.0	1126	17920
1080	14.90	3.88	33.6	1181	18000
1080	16.62	3.48	30.1	1370	18000
1080	18.53	3.12	27.0	1539	18000
1155	19.38	3.19	25.8	1510	18000
1155	21.39	2.89	23.4	1651	18000
1155	22.80	2.71	21.9	1735	18000
1155	26.60	2.32	18.8	1917	18000
1155	27.88	2.21	17.9	1967	18000
1365	31.15	2.34	16.1	2076	18000

5.7 IH/IHA GEAR REDUCER - 500 RPM

IH082

Mn_2 [Nm]	i	Pn_1 [kW]	n2 [rpm]	Fr1 [N]	Fr2 [N]
1365	34.38	2.12	14.6	2164	18000
1365	38.70	1.89	12.9	2258	18000
1365	42.75	1.71	11.7	2329	18000
1365	48.13	1.52	10.4	2405	18000

IH083

Mn_2 [Nm]	i	Pn_1 [kW]	n2 [rpm]	Fr1 [N]	Fr2 [N]
1365	56.53	1.32	8.8	2494	18000
1535	71.48	1.17	7.0	2551	18000
1535	78.87	1.06	6.3	2594	18000
1535	85.56	0.98	5.8	2626	18000
1535	98.09	0.85	5.1	2675	18000
1535	112.78	0.74	4.4	2718	18000
1540	124.44	0.68	4.0	2746	18000
1530	142.15	0.59	3.5	2778	18000
1530	154.76	0.54	3.2	2797	18000
1535	162.35	0.52	3.1	2807	18000
1540	179.13	0.47	2.8	2826	18000
1535	195.07	0.43	2.6	2841	18000
1535	222.78	0.38	2.2	2861	18000

IH101

Mn_2 [Nm]	i	Pn_1 [kW]	n2 [rpm]	Fr1 [N]	Fr2 [N]
340	1.29	13.92	386.8	1655	4325
384	1.41	14.41	354.6	1583	4348
384	2.03	10.00	246.0	2312	5000
468	2.48	9.98	201.5	2310	5000
510	3.27	8.25	152.8	2596	5000
510	3.70	7.29	135.1	2754	5000
520	4.22	6.52	118.4	2886	5000
530	4.88	5.75	102.6	3015	5000
530	5.27	5.33	94.9	3086	5000
545	6.23	4.63	80.2	3198	5000
555	7.55	3.89	66.3	3321	5000
555	8.40	3.50	59.5	3387	5000

IH102

Mn_2 [Nm]	i	Pn_1 [kW]	n2 [rpm]	Fr1 [N]	Fr2 [N]
1300	5.26	13.21	95.0	1554	16910

5.7 IH/IHA GEAR REDUCER - 500 RPM

IH102

Mn_2 [Nm]	i	Pn_1 [kW]	n2 [rpm]	Fr1 [N]	Fr2 [N]
1445	6.36	12.16	78.7	1757	17669
1660	7.05	12.59	70.9	1671	17355
1805	8.27	11.66	60.4	1850	18004
2020	9.99	10.81	50.0	2012	18611
2170	11.09	10.47	45.1	2083	18853
2240	13.32	8.99	37.5	2365	20412
2310	16.09	7.68	31.1	2616	22000
2310	17.85	6.92	28.0	2761	22000
2310	19.85	6.22	25.2	2895	22000
2310	21.44	5.76	23.3	2984	22000
2385	23.97	5.32	20.9	3070	22000
2385	25.89	4.92	19.3	3146	22000
2385	28.73	4.44	17.4	3239	22000
2730	30.72	4.75	16.3	3319	22000
2730	34.20	4.27	14.6	3397	22000
2390	38.45	3.32	13.0	3551	22000
2820	41.30	3.65	12.1	3499	22000
2820	45.82	3.29	10.9	3557	22000
2820	51.52	2.93	9.7	3616	22000

IH103

Mn_2 [Nm]	i	Pn_1 [kW]	n2 [rpm]	Fr1 [N]	Fr2 [N]
2990	55.47	2.94	9.0	3623	22000
2985	69.69	2.34	7.2	3719	22000
2990	79.82	2.05	6.3	3766	22000
2990	84.16	1.94	5.9	3783	22000
2990	93.36	1.75	5.4	3813	22000
2985	100.07	1.63	5.0	3832	22000
2990	120.84	1.35	4.1	3877	22000
2985	134.06	1.22	3.7	3898	22000
2990	143.42	1.14	3.5	3910	22000
2985	160.82	1.01	3.1	3930	22000
2985	181.07	0.90	2.8	3948	22000
2990	194.21	0.84	2.6	3958	22000
2985	215.45	0.76	2.3	3971	22000
2610	242.59	0.59	2.1	3981	22000

IH121

Mn_2 [Nm]	i	Pn_1 [kW]	n2 [rpm]	Fr1 [N]	Fr2 [N]
435	1.23	18.70	406.2	639	5232
586	1.42	21.90	352.9	851	5437

5.7 IH/IHA GEAR REDUCER - 500 RPM

IH121

Mn_2 [Nm]	i	Pn_1 [kW]	n2 [rpm]	Fr1 [N]	Fr2 [N]
595	1.81	17.43	276.8	1516	6000
640	2.00	16.93	250.0	1594	6000
680	2.48	14.51	201.6	1921	6000
680	2.95	12.18	169.2	2244	6000
700	3.14	11.79	159.1	2305	6000
725	3.58	10.72	139.7	2451	6000
725	4.12	9.32	121.4	2645	6000
740	4.80	8.16	104.2	2802	6000
750	5.21	7.61	95.9	2880	6000
765	6.25	6.48	80.0	3035	6000
850	7.70	5.84	64.9	3123	6000

IH122

Mn_2 [Nm]	i	Pn_1 [kW]	n2 [rpm]	Fr1 [N]	Fr2 [N]
2165	5.27	21.95	94.8	534	24467
2315	5.78	21.43	86.6	624	24843
2600	7.05	19.72	70.9	891	25926
2670	7.74	18.44	64.6	1092	26799
2745	8.48	17.32	59.0	1274	27668
2890	10.35	14.94	48.3	1653	29780
3180	12.66	13.43	39.5	1894	30000
3325	13.86	12.82	36.1	1990	30000
3470	16.92	10.96	29.6	2286	30000
3615	19.32	10.00	25.9	2439	30000
3615	20.57	9.40	24.3	2536	30000
3610	22.52	8.57	22.2	2665	30000
3615	24.47	7.90	20.4	2773	30000
3615	27.49	7.03	18.2	2912	30000
3610	29.86	6.46	16.7	3000	30000
4270	33.00	6.92	15.2	3098	30000
4270	36.13	6.32	13.8	3179	30000
4270	44.10	5.18	11.3	3332	30000

IH123

Mn_2 [Nm]	i	Pn_1 [kW]	n2 [rpm]	Fr1 [N]	Fr2 [N]
4270	45.77	5.09	10.9	3358	30000
4270	55.87	4.17	8.9	3479	30000
4270	67.32	3.46	7.4	3573	30000
4270	73.71	3.16	6.8	3612	30000
4270	83.34	2.80	6.0	3660	30000
4270	89.97	2.59	5.6	3688	30000

5.7 IH/IHA GEAR REDUCER - 500 RPM

IH123

Mn_2 [Nm]	i	Pn_1 [kW]	n2 [rpm]	Fr1 [N]	Fr2 [N]
4275	100.29	2.33	5.0	3723	30000
4270	108.34	2.15	4.6	3746	30000
4270	118.62	1.97	4.2	3770	30000
4270	128.18	1.82	3.9	3789	30000
4275	144.79	1.61	3.5	3817	30000
4265	155.22	1.50	3.2	3831	30000
4270	172.80	1.35	2.9	3851	30000
4270	189.19	1.23	2.6	3867	30000
4270	207.43	1.12	2.4	3881	30000
4275	230.92	1.01	2.2	3896	30000

IH142

Mn_2 [Nm]	i	Pn_1 [kW]	n2 [rpm]	Fr1 [N]	Fr2 [N]
3320	5.27	33.66	94.8	4695	31484
3545	6.36	29.82	78.7	5370	33486
3610	7.04	27.41	71.0	5778	34880
3830	7.84	26.11	63.8	6007	35776
4700	9.45	26.59	52.9	5926	35303
5200	10.47	26.55	47.7	5928	35010
5275	13.07	21.58	38.2	6790	39149
5640	15.75	19.15	31.8	7212	41556
5710	17.45	17.49	28.6	7497	43556
5780	20.04	15.42	24.9	7854	46487
5780	24.15	12.80	20.7	8307	51117
5780	26.76	11.55	18.7	8523	53795
6835	32.24	11.33	15.5	8863	55000
6835	38.85	9.41	12.9	9145	55000
6835	43.05	8.49	11.6	9279	55000

IH143

Mn_2 [Nm]	i	Pn_1 [kW]	n2 [rpm]	Fr1 [N]	Fr2 [N]
6835	48.35	7.72	10.3	9415	55000
6835	53.53	6.97	9.3	9522	55000
6835	59.22	6.30	8.4	9618	55000
6835	62.99	5.93	7.9	9672	55000
6835	71.35	5.23	7.0	9771	55000
6835	79.07	4.72	6.3	9844	55000
6830	86.43	4.32	5.8	9902	55000
6835	96.21	3.88	5.2	9964	55000
6835	104.51	3.57	4.8	10009	55000
6830	115.92	3.22	4.3	10059	55000

5.7 IH/IHA GEAR REDUCER - 500 RPM

IH143

Mn_2 [Nm]	i	Pn_1 [kW]	n2 [rpm]	Fr1 [N]	Fr2 [N]
6835	128.47	2.91	3.9	10104	55000
6835	139.55	2.67	3.6	10137	55000
6830	154.33	2.42	3.2	10174	55000
6835	185.96	2.01	2.7	10232	55000
6830	206.08	1.81	2.4	10260	55000

6.1 SALES CONDITIONS

All supplies effected by Motovario are governed exclusively by the general terms of sale that you can find on our website:

http://www.motovario.com/eng/corporate/sales-conditions

H / IEC / ATEX / EN / REV.1