CATÁLOGO TÉCNICO

H SERIES

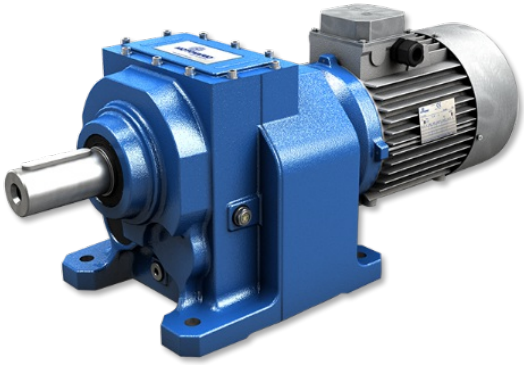

MOTOREDUCTORES **COAXIALES**

STANDARD **IEC**

MOTOVARIO®
HEART OF MOTION
a TECO Group company

ÍNDICE

1. INFORMACIÓN GENERAL

1.1 SIMBOLOGÍA Y FÓRMULAS **5**
1.1.1 Simbología **5**
1.1.2 Fórmulas **6**
1.2 SELECCIÓN DEL PRODUCTO **7**
1.3 INSTALACIÓN **8**

2. INFORMACIÓN DEL PRODUCTO

2.1 CARACTERISTICAS DE CONSTRUCCIÓN **9**
2.2 TIPOLOGÍA **10**
2.2.1 Designación **10**
2.2.2 Versiones **11**
2.2.3 Modularidad **13**
2.3 POSICIONES DE MONTAJE **15**
2.3.1 Posiciones de montaje **15**
2.3.2 Posición caja de bornes **16**
2.4 POTENCIA TÉRMICA **17**
2.4.1 Información **17**
2.4.2 Controlar **17**
2.5 APLICACIONES CRÍTICAS **18**
2.5.1 Aplicaciones críticas **18**
2.5.2 Información **18**
2.6 PREDISPOSICIÓN **19**
2.6.1 Predisposición HA **19**
2.6.2 Predisposición H **20**
2.7 RODAMIENTOS **24**
2.8 CARGAS RADIALES **25**
2.8.1 Información **25**
2.8.2 Entrada **25**
2.8.3 Salida **26**
2.9 LUBRICACIÓN **27**
2.9.1 Información **27**
2.9.2 Lubricantes **27**
2.9.3 Lubricantes especiales **28**

2.9.4 Cantidad 29

2.10 MOMENTOS DE INERCIA 30

3. DIMENSIONES

3.1 REDUCTORES/MOTORREDUCTORES 31

3.1.1 HA31 31

3.1.2 HA.1 32

3.1.3 CHA.1 33

3.1.4 IHA.1 34

3.1.5 HA.2 35

3.1.6 CHA.2 37

3.1.7 IHA.2 39

3.1.8 HA.3 41

3.1.9 CHA.3 43

3.1.10 IHA.3 45

3.1.11 H..1 47

3.1.12 CH..1 49

3.1.13 IH..1 51

3.1.14 H..2/3 53

3.1.15 CH..2/3 55

3.1.16 IH..2/3 57

3.2 MOTORES ELÉCTRICOS 59

3.2.1 Motores eléctricos 59

3.2.2 Motores de eficiencia estándar (TS), alta (TH) y premium (TP) 61

3.2.3 Potencia nominal - [kW] 62

3.3 PESO 63

3.4 EXTREMIDAD DEL EJE 65

4. ACCESORIOS Y OPCIONES

4.1 DISPOSITIVO ANTIRRETORNO 66

4.2 RETENES REFORZADOS 67

5. INFORMACIÓN DE PRESTACIONES

5.1 H/HA MOTORREDUCTORES (50Hz) 68

5.2 IH/IHA REDUCTOR - 1750 RPM 245

5.3 IH/IHA REDUCTOR - 1400 RPM 259

5.4 IH/IHA REDUCTOR - 1140 RPM 273

5.5 IH/IHA REDUCTOR - 900 RPM 287

5.6 IH/IHA REDUCTOR - 700 RPM 301

5.7 IH/IHA REDUCTOR - 500 RPM 315

6. CONDICIONES DE VENTA

6.1 CONDICIONES DE VENTA 329

1.1 SIMBOLOGÍA Y FÓRMULAS

1.1.1 Simbología

Dimensión física	Símbolo	Unidades de medida de símbolos	Entrada	Salida
Potencia	P	[kW]	P_1	P_2
Potencia requerida	Pr	[kW]	Pr_1	Pr_2
Potencia nominal	Pn	[kW]	Pn_1	Pn_2
Momento torsor	M	[Nm]	M_1	M_2
Par nominal	Mn	[Nm]		Mn_2
Par requerido	Mr	[Nm]	Mr_1	Mr_2
Número de revoluciones	n	[rpm]	n_1	n_2
Fuerza	F	[N]		
Carga radial	Fr	[N]	Fr_1	Fr_2
Carga axial	Fa	[N]	Fa_1	Fa_2
Relación de reducción	i			
Rendimiento dinámico	η_d			
Factor de servicio	f.s.			
Estático	s			
Dinámico	d			
Calculado	c			
Máximo	max			
Mínimo	min			
Momentos de inercia	J	[kgm^2]	J_1	
Temperatura ambiente	T_{amb}	[°C]		
Dimensiones		[mm]		

1.1 SIMBOLOGÍA Y FÓRMULAS

1.1.2 Fórmulas

REDUCTOR		
Tiempo de arranque o de parada	$t= v / a$	[s]
Velocidad de rotación	$v= \pi * d * n / 60$ $v= \omega * r$	[m/s]
Velocidad angular	$n= 60 * v / (\pi * d)$ $\omega= v / r$	[rpm] [rad/s]
Aceleración o deceleración	$a= v / t$	[m/s^2]
Aceleración angular	$\alpha= n / (9,55 * t)$ $\alpha= \omega / t$	[rad/s^2]
Espacio (en función de una aceleración o de una velocidad inicial o final)	$s= a * t^2 / 2$ $s= v * t /2$	[m]
Fuerza de traslación sobre plano horizontal	$F= \mu * m * g$	[N]
Fuerza de traslación sobre plano vertical (elevación)	$F= m * g$	
Fuerza de traslación sobre plano inclinado	$F= m * g (\mu * \cos\beta + \operatorname{sen}\beta)$	
m= masa [kg]; g= aceleración gravitatoria [m/s^2]; μ= coeficiente di fricción; β= ángulo de inclinación		
Momento de inercia	$J= m * v^2 / \omega^2$	[kgm^2]
Par	$M= F * d / 2$ $M= J * \omega / t$	[Nm]

MOTOR y MOTORREDUCTOR		
Tiempo de aceleración	$ta= (Jext+Jm)*n_n/9,55+(M_{peak}-Mr)$	[s]
Tiempo de frenado	$ts= (Jext+Jm)*n_n/9,55+(M_{peak}+Mr)$	[s]
Ángulo de rotación del motor en aceleración	$\varphi= n_n * ta / 19,1$	[rad]
Ángulo de rotación del motor en frenada	$\varphi= n_n * ts / 19,1$	[rad]
Potencia disponible en el eje de un motor monofásico	$P= V * I * \eta * \cos\omega$	[W]
Potencia disponible en el eje de un motor trifásico	$P= 1,73 * V * I * \eta * \cos\omega$	[W]

FUNCIONAMIENTO a 60Hz		
Velocidad angular a 60Hz	$n_{60Hz}= 1,2 * n_{50Hz}$	[rpm]
Potencia a 60Hz	$P1_{60Hz}= P1_{50Hz} * V_{60Hz}/V_{50Hz}$	[kW]
Si la tensión de alimentación V_{60Hz} es igual a la del bobinado V_{50Hz}, la potenza no varía $P1_{60Hz}= P1_{50Hz}$ Si la tensión de alimentazión V_{60Hz} es mayor del 20% de la del bobinado V_{50Hz}, la potencia aumenta un 20% $P1_{60Hz}= 1,2\ P1_{50Hz}$		
Par a 60Hz	$M_{60hz}= M_{50Hz} * P1_{60Hz} / (1,2 * P1_{50Hz})$	[Nm]
Factor de servicio a 60Hz	$f.s_{60Hz}= f.s_{50Hz} * 1,175 * P1_{50Hz} / P1_{60Hz}$	-

1.2 SELECCIÓN DEL PRODUCTO

Para la correcta selección de un reductor o de un motorreductor es necesario disponer de algunos datos fundamentales como:

A. La velocidad angular a la entrada del reductor **(n_1)** y la velocidad angular a la salida **(n_2)**. Através de estos dos valores es posible calcular la relación de reducción (i) del reductor utilizando la fórmula: **$i=n_1/n_2$**

B. El momento de torsión requerido por la aplicación **(Mr_2)**.

Conocidos estos datos, se puede proceder a la selección del motorreductor o del reductor.
Esta guía conduce a la selección del producto mediante pocos pasos:

Selección de los motorreductores

1. Determinar el factor de servicio efectivo de la aplicación **(f.s.)**. Este parámetro es función del tipo de carga de la máquina accionada, del número de accionamientos por hora y de la cantidad de horas de funcionamiento (ver el párrafo "Factor de servicio").
2. Obtener la potencia a la entrada **Pr_1** utilizando el momento de torsión requerido **Mr_2**, la velocidad **n_2** y el rendimiento dinámico. **$Pr_1=(Mr_2*n_2)/(9550*\eta_d)$**. El valor del rendimiento dinámico depende del tipo de reductor y del número de etapas de engranajes de reducción. (Para obtener el valor del rendimiento).
3. Consultar las tablas de las prestaciones de los motorreductores buscando una potencia normalizada **Pn_1** superior a la requerida **Pr_1** tal que: **$Pn_1 \geq Pr_1$**
4. Una vez identificada la potencia nominal adecuada, seleccionar el motorreductor capaz de desarrollar la velocidad angular más cercana a la n_2 deseada y con un factor de servicio f.s. mayor o igual que el necesario para la aplicación.

En las tablas de selección de los motorreductores, las combinaciones se realizan con motores de 2,4,6 polos alimentados con 50Hz.

Selección de los reductores

1. Determinar el factor de servicio de la aplicación **(f.s.)** (ver el párrafo "Factor de servicio").
2. Calcular la relación de reducción i entre la velocidad de salida n_2 requerida y la de entrada **n1**. **$i=n_1/n_2$**
3. Calcular el momento de torsión Mc_2 para seleccionar el reductor a través del par necesario para la apalicación Mr_2 y factor de servicio f.s.: **$Mc_2=Mr_2*(f.s.)$**
4. Consultar las tablas de Prestaciones de los Reductores buscando el reductor que, con la relación de reducción más cercana a la calculada, cuente con un par nominal**Mn_2** tal que: **$Mn_2 \geq Mc_2$**

Verificaciones

Una vez realizada la selección del reductor o del motorreductor es conveniente efectuar las siguientes verificaciones:

A. **Potencia Térmica**

La potencia térmica del reductor debe ser mayor o igual que la potencia mecánica instalada o que la potencia requerida por la aplicación según las indicaciones contenidas en la sección (ver el párrafo "Potencia térmica").

B. **Par Máximo**

Generalmente el par máximo (pico de carga instantáneo) que se puede aplicar al reductor no debe superar el 200% del par nominal **Mn_2** (ATEX - M_2max).

C. **Cargas Radiales**

1. Verificar que las cargas radiales que actúan sobre los árboles de entrada y/o de salida respeten los valores admitidos según el catálogo. Si son mayores, aumentar el tamaño del reductor o modificar la capacidad de soportar la carga externa. En la fase de verificación, es necesario tener en cuenta que los valores indicados en el catálogo se refieren a cargas que actúan sobre la línea media de la parte saliente del árbol por lo que, cuando la carga esté aplicada en una posición diferente, es necesario determinar la carga admisible en la posición deseada con las fórmulas correspondientes (ver el párrafo "Cargas Radiales").
2. En caso de ejes accesorios en salida, controlar que la carga aplicada sea compatible con el tamaño del eje. En caso de necesidad, contactar la ASISTENCIA TÉCNICA MOTOVARIO.

D. Si el reductor seleccionado se combina con un motor eléctrico, verificar su aplicabilidad consultando la tabla de predisposiciones (ver párrafo "Predisposiciones"). Para motores de dimensiones mayor a IEC 180, verificar la necesidad de soportar el motor con las patas, En caso de necesidad contactar con la ASISTENCIA TÉCNICA MOTOVARIO.

1.3 INSTALACIÓN

Para la instalación del reductor, atenerse a las siguientes indicaciones:

- Para evitar las vibraciones, la fijación sobre la máquina tiene que ser estable.
- Antes del montaje del grupo sobre la máquina, controlar que el sentido de rotación del eje de salida del reductor sea correcto.
- En caso de periodos de almacenamiento muy largos (4/6 meses), si el retén no está sumergido en el lubricante contenido en el grupo, se aconseja su reemplazo porque la goma podría estar pegada al eje o haber perdido las características de elasticidad necesarias para un funcionamiento correcto.
- Siempre que sea posible, proteger el reductor contra los rayos del sol y la intemperie. Controlar que la refrigeración del motor sea suficiente, asegurando una correcta transferencia de aire del lado ventilador.
- En caso de temperatura ambiente de < -5°C o > +40°C, ponerse en contacto con el Servicio técnico.
- El montaje de distintos órganos (poleas, ruedas dentadas, acoplamientos, ejes, etc.) sobre los ejes debe ser efectuado utilizando los agujeros roscados correspondientes u otros sistemas, asegurando una manipulación correcta sin correr el riesgo de dañar los cojinetes o las partes externas de los grupos.
- Lubricar las superficies en contacto para evitar gripajes u oxidaciones.
- La pintura no debe cubrir las partes de goma y los agujeros de los posibles tapones-respiraderos.
- Para los grupos equipados de tapones de aceite, reemplazar el tapón cerrado, utilizado durante el transporte, por el tapón respiradero.
- Controlar el correcto nivel de lubricante mediante la mirilla (si la hay).
- La puesta en marcha se debe producir de manera gradual evitando la aplicación súbita de la carga máxima.
- Si bajo el reductor hay mecanismos, cosas ó materiales que puedan dañarse por una eventual pérdida de aceite, deberá preverse una protección adecuada.

Montaje motor en bridas pam

Si el equipo se suministra sin motor es preciso observar las siguientes recomendaciones para garantizar un correcto montaje del motor eléctrico.Verificar que la tolerancia del eje y de la brida motor se correspondan al menos a una clase de calidad “normal”. Limpiar cuidadosamente el eje, el centraje y el plano de asiento de restos de pintura o suciedad. Proceder al montaje del semiacoplamiento/manguito en el eje del motor eléctrico sin excesiva fuerza, si no entra con suavidad verificar la correcta tolerancia de la chaveta del motor (ver imagen), utilizar en cualquier caso métodos de montaje que no dañen los rodamientos del motor. Proceder a continuación al montaje del motor conel semiacoplamiento en el reductor, evitando la interferencia de los dientes del acoplamiento. No se prevé ninguna adaptación de la chaveta del motor.

Acoplamento elástico

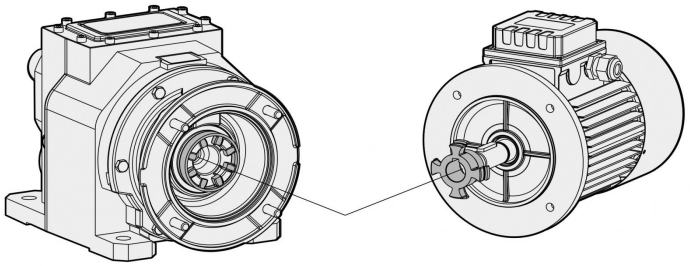

Manguito PAM

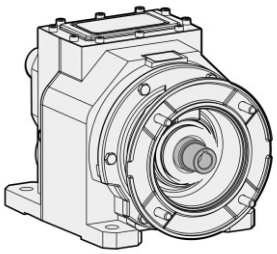

2.1 CARACTERISTICAS DE CONSTRUCCIÓN

Los productos Motovario se entregan con el siguiente acabado superficial.

Cajas aleación aluminio fund.a presión
Se realizan las siguientes operaciones de limpieza superficial en las cajas:
- Eliminación de las barbas de fundición
- Granallado de alta precisión.
- Pintado.
- Lavado y pasivación.

Unidades con cajas de fundición gris:
- Las cajas se pintan siempre.

Especificaciones pintura:
- Epoxipoliéster Azul Marino RAL5010. Polvo termoestable a base de resinas poliéster, modificadas con resina epoxídica.

Propiedades mecánicas:
- Las pruebas realizadas con las chapas finas Unichim desengrasadas con grosor del film de 60 micrones han satisfecho las siguientes exigencias: adherencia (ISO2409).

Resistencia al calor:
- 24 HORAS A 150°C.

Resistencia a la corrosión:
- Niebla salina ASTM B 117/97 de 100 a 500 horas en función del tratamiento preliminar del soporte.

Prestaciones:
- Capacidad de carga verificada según DIN 3990, ISO 6336, AGMA 2101, ISO 10300, DIN 3991, ISO 281, DIN 743.

Rendimiento η:
- El rendimiento es la relación entre la potencia suministrada a la salida P_2 y la absorbida por el reductor P_1: $\eta = P_2/P_1$.

Los reductores coaxiales de la serie H/HA presentan un valor medio igual a:
H..1 trenes = 0,97
H..2 trenes = 0,96
H..3 trenes = 0,94

2.2 TIPOLOGÍA

2.2.1 Designación

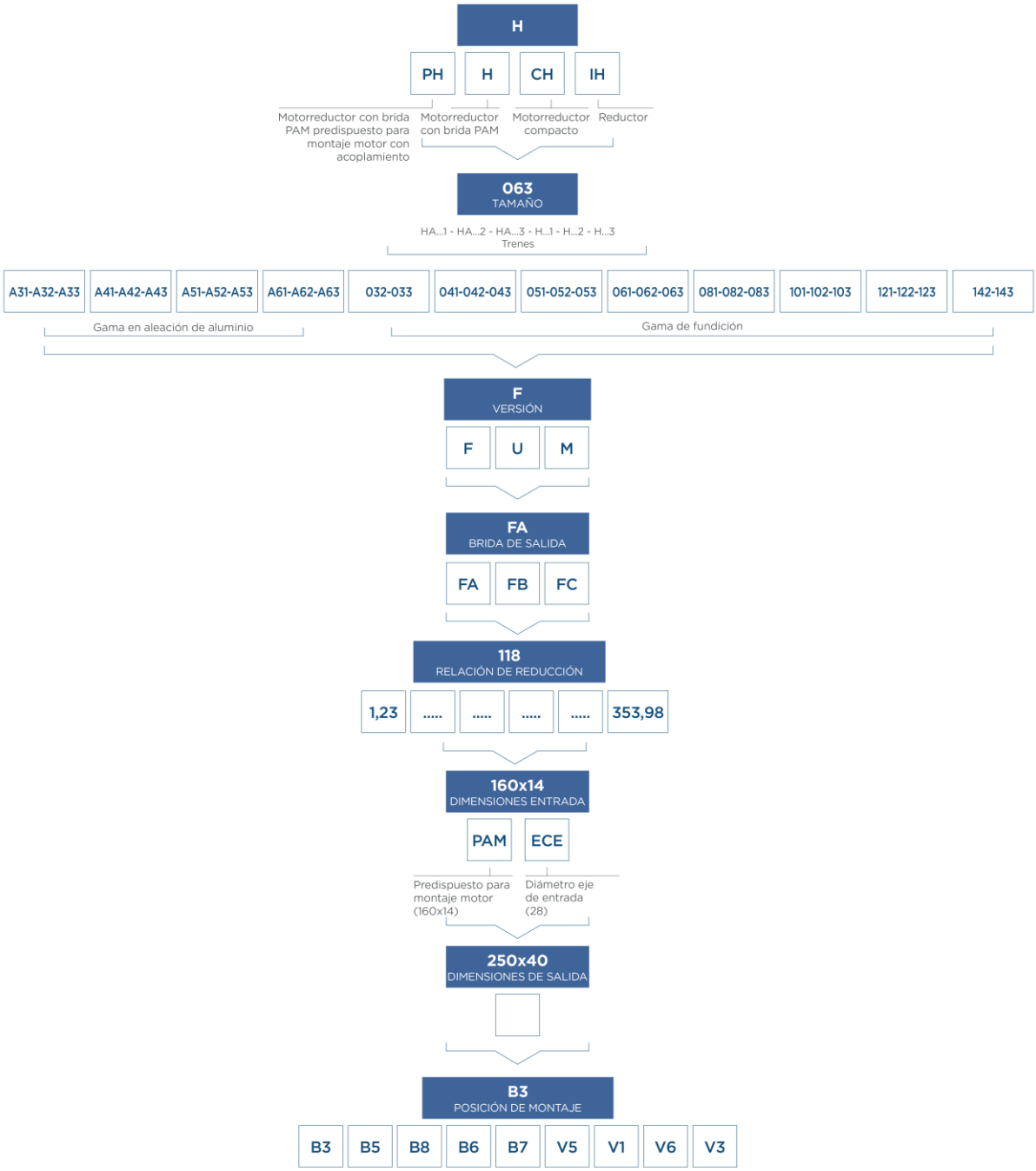

2.2 TIPOLOGÍA

2.2.2 Versiones

A30 - A40 - A50 - A60

1 TREN

CARCASA EN PATAS

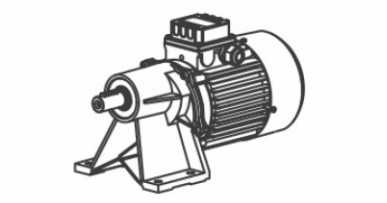

F CARCASA CON BRIDA

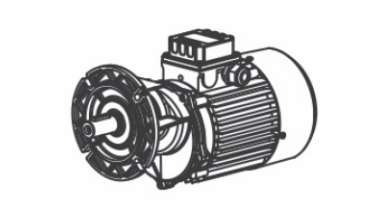

A31 CARCASA CON BRIDA

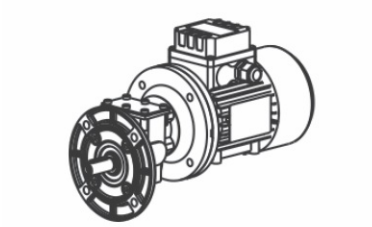

2 Y 3 TRENES

CARCASA EN PATAS

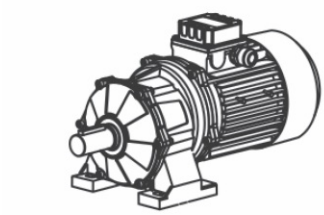

F CARCASA CON BRIDA

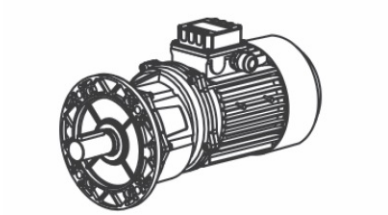

U CARCASA UNIVERSAL

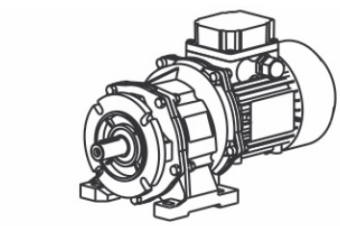

2.2 TIPOLOGÍA

030 - 040 - 050 - 060 - 080 - 100 - 120 - 140

1 TREN

CARCASA EN PATAS

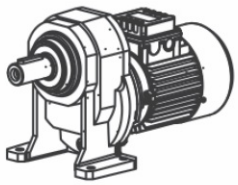

F CARCASA CON BRIDA

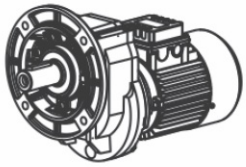

U CARCASA UNIVERSAL

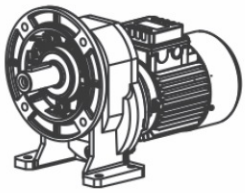

M CARCASA MONO

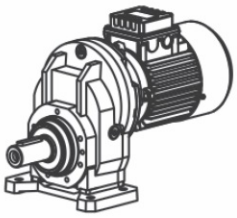

2 Y 3 TRENES

CARCASA EN PATAS

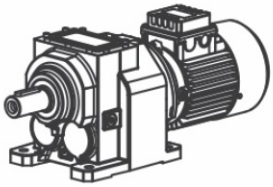

F CARCASA CON BRIDA

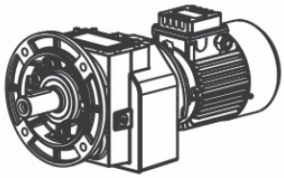

U CARCASA UNIVERSAL

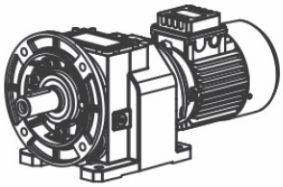

2.2 TIPOLOGÍA

2.2.3 Modularidad

HA SERIE EN ALEACIÓN DE ALUMINIO

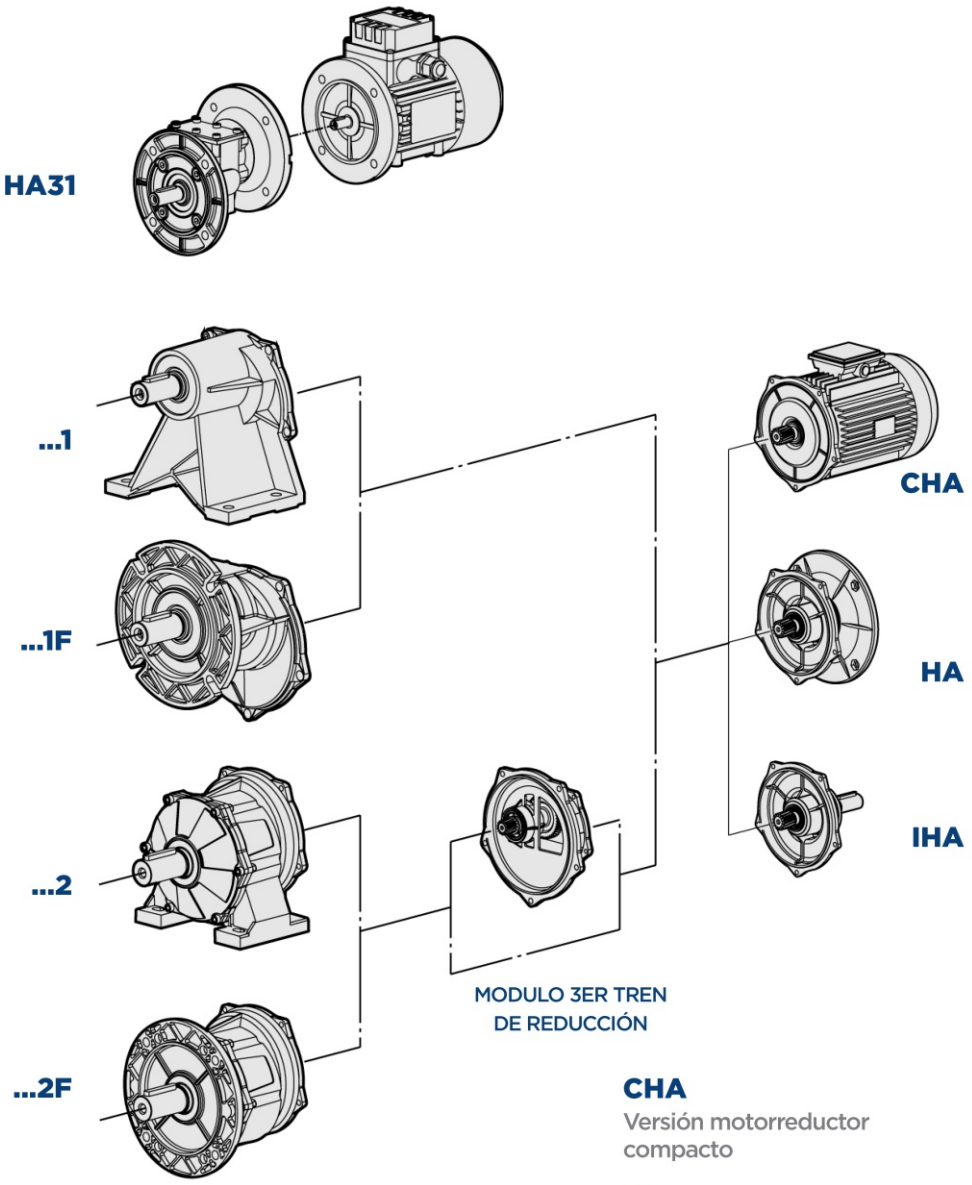

CHA
Versión motorreductor compacto

HA
Versión motorreductor (PAM)

IHA
Versión con eje macho de entrada

2.2 TIPOLOGÍA

H SERIE EN FUNDICIÓN GRIS

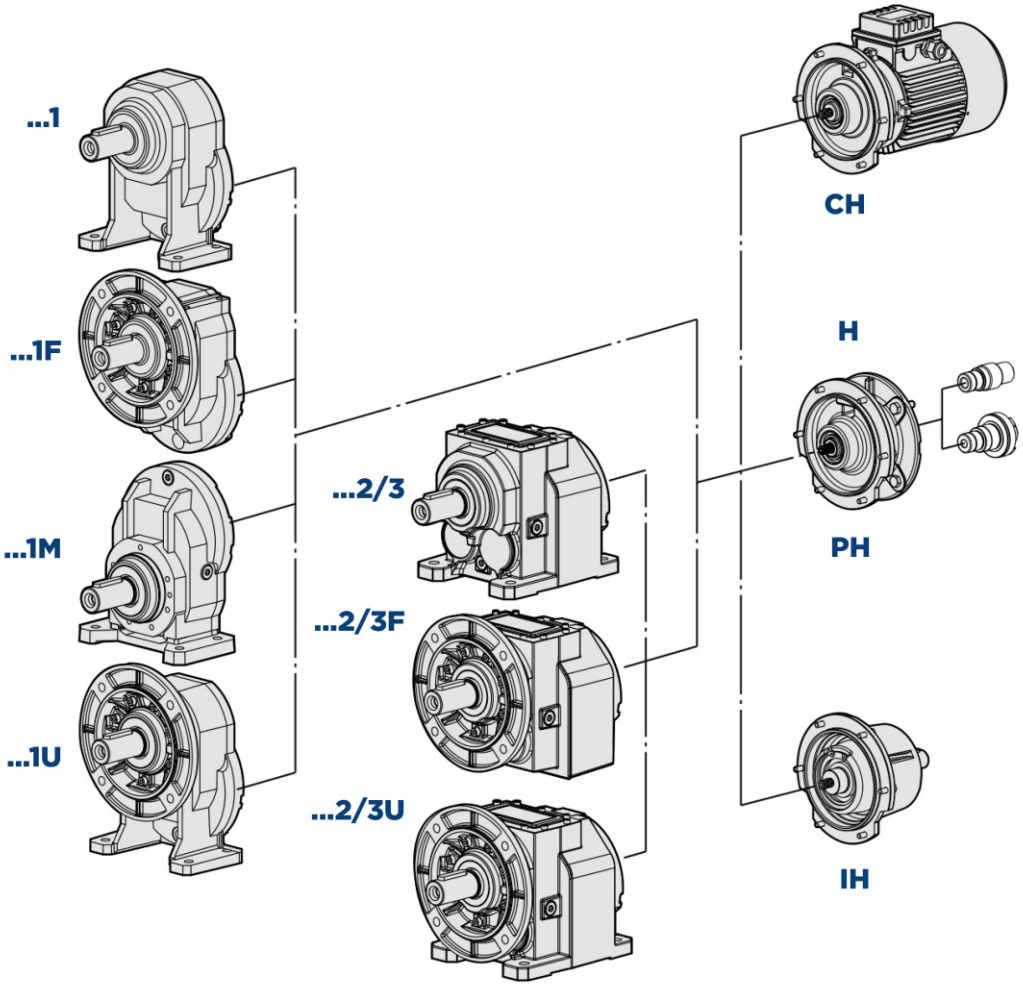

CH
Versión motorreductor compacto

H
Versión motorreductor (PAM)

PH
Predispuesto para montaje motor con acoplamiento

IH
Versión con eje macho de entrada

2.3 POSICIONES DE MONTAJE

2.3.1 Posiciones de montaje

Siempre que sea posible utilizar la posición de montaje B3, que desde el punto de vista técnico garantiza mejor batida del aceite, mejor lubricación y menor calentamiento.

HA1T - H1T	HA1F - H1F
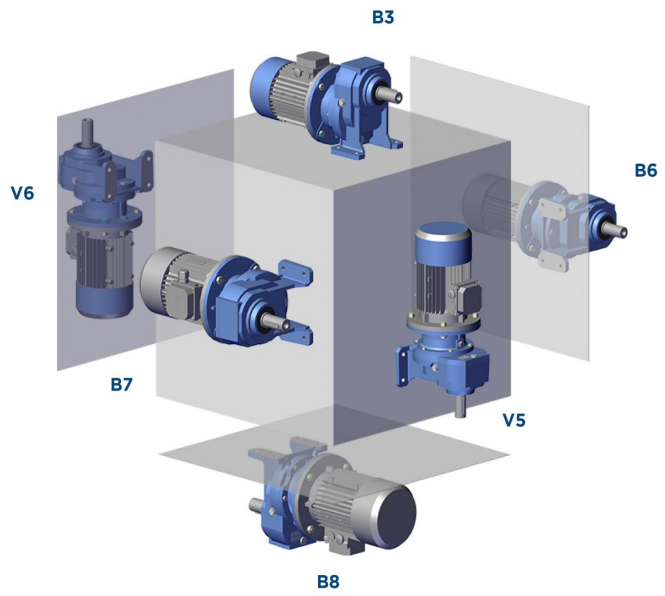	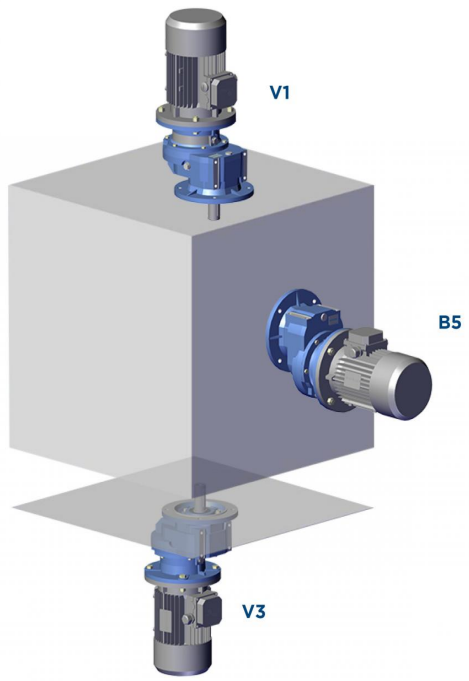
H1M	
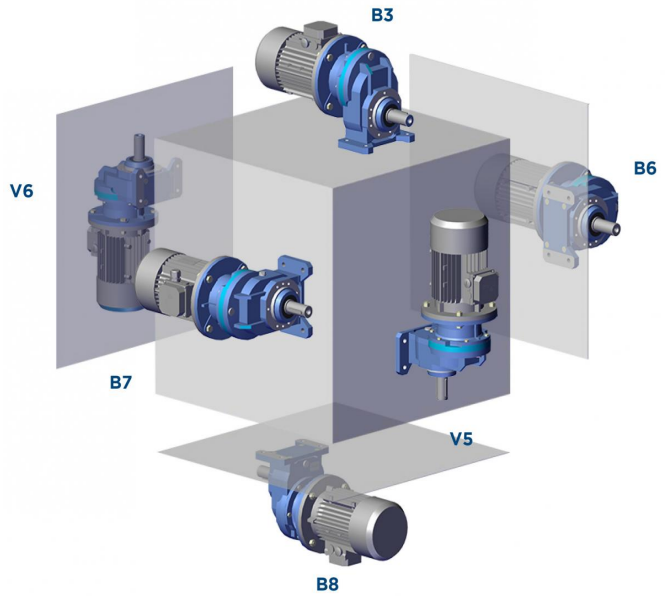	

2.3 POSICIONES DE MONTAJE

HA2/3T - H2/3T	HA2/3F - H2/3F
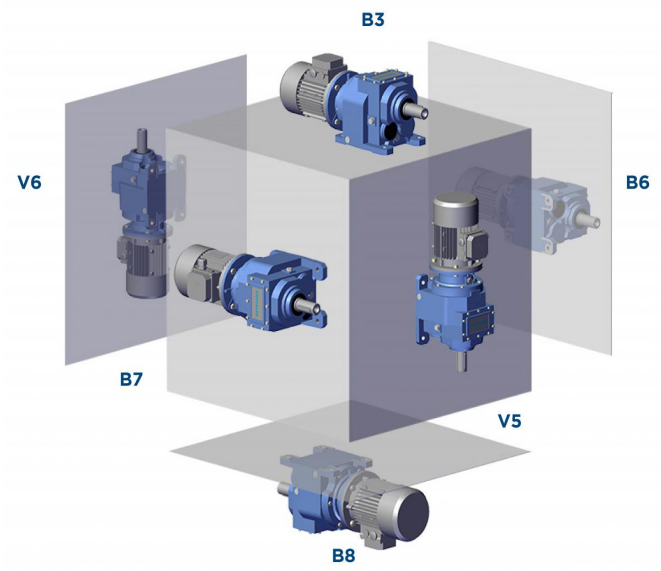	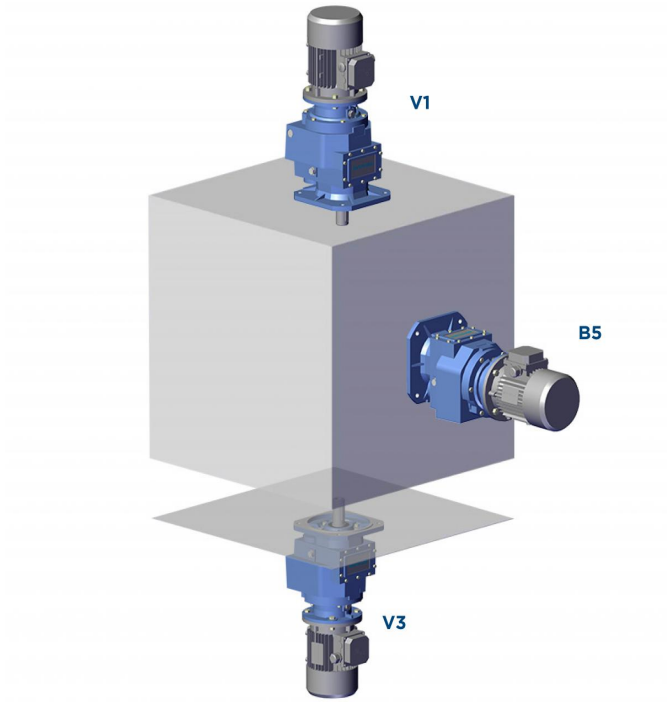

2.3.2 Posición caja de bornes

De no especificarse lo contrario en el pedido, el motorreductor se monta con caja de bornes en posición 1.

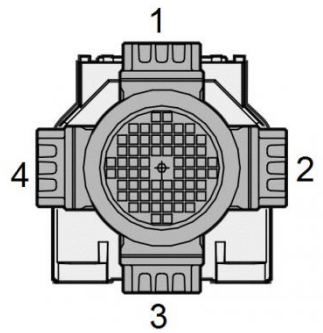

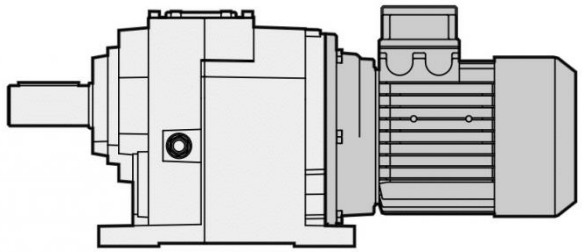

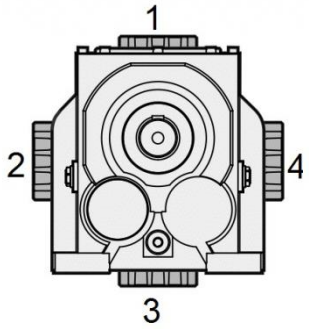

2.4 POTENCIA TÉRMICA

2.4.1 Información

La siguiente tabla contiene los valores de potencia térmica nominal Pth expresada en kW en las siguientes condiciones de referencia:

- posición de montaje B3
- funcionamiento continuo con velocidad de entrada <= 1500 rpm
- temperatura ambiente de T_{amb}=25°C
- altura sobre el nivel del mar
- velocidad del aire en torno al reductor >= 1m/s
- ausencia de cargas radiales y/o axiales externas

n_1 = 1500rpm					
	Pth [kW]		Pth [kW]		Pth [kW]
HA31	/	H041	6	H032	5
HA41	5	H051	8,5	H042	7
HA51	7	H061	13,5	H052	9
HA61	15	H081	27,2	H062	15,5
HA32	5	H101	51,5	H082	24
HA42	6,5	H121	67,5	H102	30
HA52	11			H122	36
HA62	15			H142	49

En las condiciones de referencia mencionadas, aplicando al reductor una potencia no mayor que la Pth, se garantiza una correcta lubricación y el buen funcionamiento del reductor (T aceite max=95°C).

NOTA: Las versiones de los reductores con tres etapas de reducción no necesitan la verificación de la potencia térmica ya que no se alcanzan los límites térmicos.

2.4.2 Controlar

Controlar la aplicación

Salvo cuando los tiempos de funcionamiento continuo son menores que dos horas y se producen pausas capaces de llevar el reductor a la temperatura ambiente, para cada aplicación es perentorio realizar la verificación del límite térmico del reductor, según la siguiente fórmula: $\mathbf{P_1 < Pth * Fc * Fv * Fa}$ **,** donde:

- P_1 = potencia a la entrada del reductor [kW]
- Pth = potencia térmica en condiciones de referencia [kW] (ver la tabla de arriba)
- Fc = factor de corrección de la temperatura ambiente y servicio
- Fv = factor de corrección de aireación
- Fa = factor de corrección de la altitud

Los factores de corrección son relativos a condiciones operativas diferentes a las de referencia y se encuentran en las siguientes tablas ISO14179:

		Servicio con carga por hora de funcionamiento				
	Fc	100	80	70	40	20
Temperatura ambiente °C	10	1,15	1,21	1,32	1,55	2,07
	18	1,07	1,12	1,23	1,44	1,93
	25	1,00	1,05	1,15	1,35	1,80
	30	0,93	0,98	1,07	1,26	1,67
	40	0,83	0,87	0,95	1,12	1,49
	43	0,75	0,79	0,86	1,01	1,35
	50	0,67	0,70	0,77	0,90	1,21

Altitud (m)	Fa
0*	1
750	0,95
1500	0,9
2250	0,85
3000	0,81

Velocidad del aire ambiental	Fv
Aire estancado (<0,5 m/s)	0.75
Instalación cubierta con poca aireación	1
Instalación cubierta con buena aireación (>1,4 m/s)	1.4
Instalación al aire libre (>3,7 m/s)	1.9

*Nivel del mar

En el caso de funcionamiento con velocidades de entrada mayores que 2000 rpm o temperaturas ambiente mayores que 40°C es aconsejable llamar a nuestro servicio de asistencia técnica.

2.5 APLICACIONES CRÍTICAS

2.5.1 Aplicaciones críticas

H	A31	A30	A40	A50	A60
V5 - V1: 1500 < n1 < 3000	✔	✔	✔	✔	✔
n1 > 3000	B	B	B	B	B
V3 - V6	B	B	B	B	B

H	030	040	050	060	080	100	125	140
V5 - V1: 1500 < n1 < 3000	✔	✔	✔	✔	✔	✔	B	B
n1 > 3000	B	B	B	B	B	B	A	A
V3 - V6	B	B	B	B	B	B	B	B

✔ Aplicación verificada
A Aplicación desaconsejada
B Controlar la aplicación y/o ponerse en contacto con nuestro servicio técnico

2.5.2 Información

Las prestaciones indicadas en el catálogo corresponden a la posición B3 o similar, cuando el primer tren de engranajes no está completamente sumergido en el aceite. Para posiciones de montaje distintas y/o de velocidades particulares de entrada, atenerse a las
tablas que ponen en evidencia las distintas situaciones críticas por cada tamaño de reductor. Además es necesario considerar y evaluar cuidadosamente las siguientes aplicaciones, poniéndose en contacto con nuestro Servicio Técnico:

- Evitar la utilización como multiplicador.
- Utilización en servicios que, en caso de ruptura del reductor, podrían resultar peligrosos para personas.
- Aplicaciones con inercias particularmente elevadas.
- Utilización como cabrestante de levantamiento.
- Aplicaciones con esfuerzos dinámicos elevados sobre la carcasa del reductor.
- Utilización en ambiente con T_{amb} inferior a -5°C o superior a 40°C.
- Utilización en ambiente con presencia de agentes químicos agresivos.
- Utilización en ambiente salino.
- Posiciones de montaje no previstas en el catálogo.
- Utilización en ambiente radioactivo.
- Utilización en ambiente con presión distinta de la atmosférica.

Evitar aplicaciones donde está prevista la inmersión, aún parcial, del reductor.
En presencia de sobrecargas, debidas a arranques a plena carga, frenadas, colisiones y otras causas estáticas y dinámicas, verificar siempre que el pico de momento torsor sea siempre inferior a $2*Mn_2$.

2.6 PREDISPOSICIÓN

2.6.1 Predisposición HA

B10 = Versión motorreductor compacto.

Rogamos considerar que tratase de tablas de combinaciones posibles. Verifiquen el factor de servicio.

	i	063	071	080	090	100	112
CH A32	5,38 ÷ 30,55	B10	B10	B10			
CH A32	35,44 ÷ 60,67	B10	B10				
CH A33	51,32 ÷ 166,61	B10	B10				
CH A33	193,3 ÷ 347,29	B10	B10	B10			
CH A41	1,45 ÷ 5,45	B10	B10	B10			
CH A41	7,88 ÷ 10,83	B10	B10				
CH A42	5,38 ÷ 30,55	B10	B10	B10	B10		
CH A42	35,44 ÷ 60,67	B10	B10				
CH A43	51,32 ÷ 166,61	B10	B10	B10	B10		
CH A43	193,3 ÷ 347,29	B10	B10				
CH A51	1,45 ÷ 5,45	B10	B10	B10	B10		
CH A51	7,88 ÷ 10,83	B10	B10				
CH A52	5,14 ÷ 25,43			B10	B10	B10	B10
CH A52	29,89 ÷ 61,87			B10	B10		
CH A53	49,8 ÷ 163,05	B10	B10	B10	B10		
CH A53	200,27 ÷ 353,98	B10	B10				
CH A61	1,33 ÷ 4,38			B10	B10	B10	B10
CH A61	7,75 ÷ 10,67			B10	B10		
CH A62	5,14 ÷ 25,43			B10	B10	B10	B10
CH A62	29,89 ÷ 61,87			B10	B10		
CH A63	49,8 ÷ 163,05	B10	B10	B10	B10		
CH A63	200,27 ÷ 353,98	B10	B10				

	i	063	071	080	090	100	112
H A31	2,55 ÷ 4,75	B5	B5	B5			
H A31	5,1 ÷ 7,88	B5	B5				
H A31	10,83	B5					
H A32	5,38 ÷ 30,55	B5	B5-B14	B5-B14			
H A32	35,44 ÷ 60,67	B5	B5-B14				
H A33	51,32 ÷ 166,61	B5	B5-B14				
H A33	193,3 ÷ 347,29	B5	B5-B14	B5-B14			
H A41	1,45 ÷ 5,45	B5	B5-B14	B5-B14			
H A41	7,88 ÷ 10,83	B5	B5-B14				
H A42	5,38 ÷ 30,55	B5	B5-B14	B5-B14	B5-B14		
H A42	35,44 ÷ 60,67	B5	B5-B14				
H A43	51,32 ÷ 166,61	B5	B5-B14	B5-B14	B5-B14		
H A43	193,3 ÷ 347,29	B5	B5-B14				
H A51	1,45 ÷ 5,45	B5	B5-B14	B5-B14	B5-B14		
H A51	7,88 ÷ 10,83	B5	B5-B14				
H A52	5,14 ÷ 25,43			B5-B14	B5-B14	B5-B14	B5-B14
H A52	29,89 ÷ 61,87			B5-B14	B5-B14		
H A53	49,8 ÷ 163,05	B5	B5-B14	B5-B14	B5-B14		
H A53	200,27 ÷ 353,98	B5	B5-B14				
H A61	1,33 ÷ 4,38			B5-B14	B5-B14	B5-B14	B5-B14
H A61	7,75 ÷ 10,67			B5-B14	B5-B14		
H A62	5,14 ÷ 25,43			B5-B14	B5-B14	B5-B14	B5-B14
H A62	29,89 ÷ 61,87			B5-B14	B5-B14		
H A63	49,8 ÷ 163,05	B5	B5-B14	B5-B14	B5-B14		
H A63	200,27 ÷ 353,98	B5	B5-B14				

2.6 PREDISPOSICIÓN

2.6.2 Predisposición H

B11 = Versión motorreductor compacto.

Rogamos considerar que tratase de tablas de combinaciones posibles. Verifiquen el factor de servicio.

*Para motor tamaño 063 no existe la versión PB.

CH - H - PH 032					
i	071	080	090	100	112
4,70	B5-B11	B5-B11	B5-B11	B5-B11	B5-B11
6,23	B5-B11	B5-B11	B5-B11	B5-B11	B5-B11
7,76	B5-B11	B5-B11	B5-B11	B5-B11	B5-B11
8,87	B5-B11	B5-B11	B5-B11	B5-B11	B5-B11
10,14	B5-B11	B5-B11	B5-B11	B5-B11	B5-B11
11,76	B5-B11	B5-B11	B5-B11	B5-B11	B5-B11
13,72	B5-B11	B5-B11	B5-B11	B5-B11	B5-B11
14,66	B5-B11	B5-B11	B5-B11	B5-B11	B5-B11
16,77	B5-B11	B5-B11	B5-B11	B5-B11	B5-B11
18,20	B5-B11	B5-B11	B5-B11	B5-B11	B5-B11
19,90	B5-B11	B5-B11	B5-B11		
22,68	B5-B11	B5-B11	B5-B11	B5-B11	B5-B11
23,83	B5-B11	B5-B11	B5-B11		
26,39	B5-B11	B5-B11	B5-B11		
29,70	B5-B11	B5-B11	B5-B11		
32,89	B5-B11	B5-B11	B5-B11		
37,92	B5-B11	B5-B11	B5-B11		
41,40	B5-B11	B5-B11	B5-B11		
47,25	B5-B11	B5-B11	B5-B11		

CH - H - PH 033				
i	*063	071	080	090
53,59	B5-B11	B5-B11	B5-B11	B5-B11
66,78	B5-B11	B5-B11	B5-B11	B5-B11
74,84	B5-B11	B5-B11	B5-B11	B5-B11
99,27	B5-B11	B5-B11	B5-B11	B5-B11
108,05	B5-B11	B5-B11		
123,71	B5-B11	B5-B11	B5-B11	B5-B11
143,33	B5-B11	B5-B11		
178,61	B5-B11	B5-B11		
197,17	B5-B11	B5-B11		
245,70	B5-B11	B5-B11		

CH - H - PH 041			
i	071	080	090
1,44	B5-B11	B5-B11	B5-B11
2,00	B5-B11	B5-B11	B5-B11
2,55	B5-B11	B5-B11	B5-B11
2,71	B5-B11	B5-B11	B5-B11
3,11	B5-B11	B5-B11	B5-B11
3,59	B5-B11	B5-B11	B5-B11
4,20	B5-B11	B5-B11	B5-B11
5,00	B5-B11	B5-B11	B5-B11
5,50	B5-B11	B5-B11	B5-B11
6,09	B5-B11	B5-B11	B5-B11
7,67	B5-B11	B5-B11	B5-B11
8,75	B5-B11	B5-B11	B5-B11

CH - H - PH 042					
i	071	080	090	100	112
5,46	B5-B11	B5-B11	B5-B11	B5-B11	B5-B11
7,19	B5-B11	B5-B11	B5-B11	B5-B11	B5-B11
8,91	B5-B11	B5-B11	B5-B11	B5-B11	B5-B11
10,31	B5-B11	B5-B11	B5-B11	B5-B11	B5-B11
11,80	B5-B11	B5-B11	B5-B11	B5-B11	B5-B11
13,57	B5-B11	B5-B11	B5-B11	B5-B11	B5-B11
15,96	B5-B11	B5-B11	B5-B11	B5-B11	B5-B11
19,00	B5-B11	B5-B11	B5-B11	B5-B11	B5-B11
21,00	B5-B11	B5-B11	B5-B11	B5-B11	B5-B11
23,15	B5-B11	B5-B11	B5-B11		
26,04	B5-B11	B5-B11	B5-B11	B5-B11	B5-B11
27,50	B5-B11	B5-B11	B5-B11		
30,45	B5-B11	B5-B11	B5-B11		
34,10	B5-B11	B5-B11	B5-B11		
37,76	B5-B11	B5-B11	B5-B11		
43,75	B5-B11	B5-B11	B5-B11		
47,53	B5-B11	B5-B11	B5-B11		
54,25	B5-B11	B5-B11	B5-B11		

CH - H - PH 043				
i	*063	071	080	090
61,83	B5-B11	B5-B11	B5-B11	B5-B11
76,67	B5-B11	B5-B11	B5-B11	B5-B11
87,05	B5-B11	B5-B11	B5-B11	B5-B11
114,55	B5-B11	B5-B11	B5-B11	B5-B11
125,69	B5-B11	B5-B11		
142,04	B5-B11	B5-B11	B5-B11	B5-B11
165,38	B5-B11	B5-B11		
205,07	B5-B11	B5-B11		
227,50	B5-B11	B5-B11		
282,10	B5-B11	B5-B11		

2.6 PREDISPOSICIÓN

CH - H - PH 051					
i	071	080	090	100	112
1,27		B5-B11	B5-B11	B5-B11	B5-B11
1,42		B5-B11	B5-B11	B5-B11	B5-B11
2,13		B5-B11	B5-B11	B5-B11	B5-B11
2,57	B5-B11	B5-B11	B5-B11	B5-B11	B5-B11
3,17	B5-B11	B5-B11	B5-B11	B5-B11	B5-B11
3,69	B5-B11	B5-B11	B5-B11	B5-B11	B5-B11
4,00	B5-B11	B5-B11	B5-B11	B5-B11	B5-B11
4,77	B5-B11	B5-B11	B5-B11	B5-B11	B5-B11
5,25	B5-B11	B5-B11	B5-B11	B5-B11	B5-B11
5,82	B5-B11	B5-B11	B5-B11	B5-B11	B5-B11
7,33	B5-B11	B5-B11	B5-B11		
8,38	B5-B11	B5-B11	B5-B11		

CH - H - PH 052					
i	071	080	090	100	112
5,73		B5-B11	B5-B11	B5-B11	B5-B11
6,89		B5-B11	B5-B11	B5-B11	B5-B11
8,53		B5-B11	B5-B11	B5-B11	B5-B11
9,56		B5-B11	B5-B11	B5-B11	B5-B11
11,51		B5-B11	B5-B11	B5-B11	B5-B11
14,24		B5-B11	B5-B11	B5-B11	B5-B11
16,59	B5-B11	B5-B11	B5-B11	B5-B11	B5-B11
18,00	B5-B11	B5-B11	B5-B11	B5-B11	B5-B11
19,97	B5-B11	B5-B11	B5-B11	B5-B11	B5-B11
21,67	B5-B11	B5-B11	B5-B11	B5-B11	B5-B11
24,71	B5-B11	B5-B11	B5-B11	B5-B11	B5-B11
26,18	B5-B11	B5-B11	B5-B11	B5-B11	B5-B11
28,44	B5-B11	B5-B11	B5-B11	B5-B11	B5-B11
31,52	B5-B11	B5-B11	B5-B11	B5-B11	B5-B11
33,00	B5-B11	B5-B11	B5-B11		
38,98	B5-B11	B5-B11	B5-B11	B5-B11	B5-B11
45,36	B5-B11	B5-B11	B5-B11		
49,13	B5-B11	B5-B11	B5-B11		
56,11	B5-B11	B5-B11	B5-B11		

CH - H - PH 053				
i	*063	071	080	090
58,81	B5-B11	B5-B11	B5-B11	B5-B11
72,75	B5-B11	B5-B11	B5-B11	B5-B11
90,51	B5-B11	B5-B11	B5-B11	B5-B11
108,95	B5-B11	B5-B11	B5-B11	B5-B11
134,76	B5-B11	B5-B11	B5-B11	B5-B11
157,29	B5-B11	B5-B11		
194,56	B5-B11	B5-B11		
216,38	B5-B11	B5-B11		
267,65	B5-B11	B5-B11		

CH - H - PH 061				
i	080	090	100	112
1,34	B5-B11	B5-B11	B5-B11	B5-B11
2,13	B5-B11	B5-B11	B5-B11	B5-B11
2,57	B5-B11	B5-B11	B5-B11	B5-B11
3,17	B5-B11	B5-B11	B5-B11	B5-B11
3,69	B5-B11	B5-B11	B5-B11	B5-B11
4,00	B5-B11	B5-B11	B5-B11	B5-B11
4,77	B5-B11	B5-B11	B5-B11	B5-B11
5,25	B5-B11	B5-B11	B5-B11	B5-B11
5,82	B5-B11	B5-B11	B5-B11	B5-B11
7,33	B5-B11	B5-B11	B5-B11	B5-B11
8,38	B5-B11	B5-B11	B5-B11	B5-B11

CH - H - PH 062					
i	080	090	100	112	132
5,38	B5-B11	B5-B11	B5-B11	B5-B11	B5-B11
5,93	B5-B11	B5-B11	B5-B11	B5-B11	B5-B11
7,39	B5-B11	B5-B11	B5-B11	B5-B11	B5-B11
8,50	B5-B11	B5-B11	B5-B11	B5-B11	B5-B11
9,39	B5-B11	B5-B11	B5-B11	B5-B11	B5-B11
11,69	B5-B11	B5-B11	B5-B11	B5-B11	B5-B11
12,67	B5-B11	B5-B11	B5-B11	B5-B11	B5-B11
14,75	B5-B11	B5-B11	B5-B11	B5-B11	B5-B11
16,29	B5-B11	B5-B11	B5-B11	B5-B11	B5-B11
17,67	B5-B11	B5-B11	B5-B11	B5-B11	B5-B11
20,28	B5-B11	B5-B11	B5-B11	B5-B11	B5-B11
23,27	B5-B11	B5-B11	B5-B11	B5-B11	B5-B11
25,70	B5-B11	B5-B11	B5-B11	B5-B11	B5-B11
29,33	B5-B11	B5-B11	B5-B11	B5-B11	
32,00	B5-B11	B5-B11	B5-B11	B5-B11	B5-B11
36,99	B5-B11	B5-B11	B5-B11	B5-B11	
40,33	B5-B11	B5-B11	B5-B11	B5-B11	
46,06	B5-B11	B5-B11	B5-B11	B5-B11	

CH - H - PH 063					
i	071	080	090	100	112
49,45		B5-B11	B5-B11	B5-B11	B5-B11
54,61		B5-B11	B5-B11	B5-B11	B5-B11
68,00		B5-B11	B5-B11	B5-B11	B5-B11
85,82	B5-B11	B5-B11	B5-B11	B5-B11	B5-B11
94,76	B5-B11	B5-B11	B5-B11	B5-B11	B5-B11
118,00	B5-B11	B5-B11	B5-B11	B5-B11	B5-B11
135,40	B5-B11	B5-B11	B5-B11	B5-B11	B5-B11
149,51	B5-B11	B5-B11	B5-B11	B5-B11	B5-B11
170,67	B5-B11	B5-B11	B5-B11		
186,18	B5-B11	B5-B11	B5-B11	B5-B11	B5-B11
215,21	B5-B11	B5-B11	B5-B11		
234,67	B5-B11	B5-B11	B5-B11		
268,00	B5-B11	B5-B11	B5-B11		

2.6 PREDISPOSICIÓN

CH - H - PH 081					
i	080	090	100	112	132
1,30					B5-B11
1,43					B5-B11
1,93					B5-B11
2,54			B5-B11	B5-B11	B5-B11
3,25			B5-B11	B5-B11	B5-B11
3,72			B5-B11	B5-B11	B5-B11
4,00			B5-B11	B5-B11	B5-B11
4,67			B5-B11	B5-B11	B5-B11
5,54	B5-B11	B5-B11	B5-B11	B5-B11	B5-B11
6,08	B5-B11	B5-B11	B5-B11	B5-B11	B5-B11
7,50	B5-B11	B5-B11	B5-B11	B5-B11	B5-B11
8,44	B5-B11	B5-B11	B5-B11	B5-B11	B5-B11

CH - H - PH 082						
i	080	090	100	112	132	160
5,39					B5-B11	B5
5,95					B5-B11	B5
7,39					B5-B11	B5
8,02					B5-B11	B5
8,85					B5-B11	B5
11,01					B5-B11	B5
13,50			B5-B11	B5-B11	B5-B11	B5
14,90			B5-B11	B5-B11	B5-B11	B5
16,60			B5-B11	B5-B11	B5-B11	B5
18,53			B5-B11	B5-B11	B5-B11	B5
19,38			B5-B11	B5-B11	B5-B11	B5
21,39			B5-B11	B5-B11	B5-B11	B5
22,80			B5-B11	B5-B11	B5-B11	B5
26,60			B5-B11	B5-B11	B5-B11	B5
27,88	B5-B11	B5-B11	B5-B11	B5-B11	B5-B11	
31,15	B5-B11	B5-B11	B5-B11	B5-B11	B5-B11	
34,38	B5-B11	B5-B11	B5-B11	B5-B11	B5-B11	
38,70	B5-B11	B5-B11	B5-B11	B5-B11	B5-B11	
42,75	B5-B11	B5-B11	B5-B11	B5-B11	B5-B11	
48,13	B5-B11	B5-B11	B5-B11	B5-B11	B5-B11	

CH - H - PH 083					
i	080	090	100	112	132
56,53	B5-B11	B5-B11	B5-B11	B5-B11	B5-B11
71,48	B5-B11	B5-B11	B5-B11	B5-B11	B5-B11
78,87	B5-B11	B5-B11	B5-B11	B5-B11	B5-B11
85,60	B5-B11	B5-B11	B5-B11	B5-B11	B5-B11
98,09	B5-B11	B5-B11	B5-B11	B5-B11	B5-B11
112,78	B5-B11	B5-B11	B5-B11	B5-B11	B5-B11
124,44	B5-B11	B5-B11	B5-B11	B5-B11	B5-B11
142,15	B5-B11	B5-B11	B5-B11	B5-B11	
154,76	B5-B11	B5-B11	B5-B11	B5-B11	B5-B11
162,35	B5-B11	B5-B11			
179,13	B5-B11	B5-B11			
195,07	B5-B11	B5-B11			
222,78	B5-B11	B5-B11			

CH - H - PH 101					
i	100	112	132	160	180
1,29			B5-B11	B5	B5
1,41			B5-B11	B5	B5
2,03			B5-B11	B5	B5
2,48			B5-B11	B5	B5
3,27	B5-B11	B5-B11	B5-B11	B5	B5
3,70	B5-B11	B5-B11	B5-B11	B5	B5
4,22			B5-B11	B5	B5
4,88	B5-B11	B5-B11	B5-B11	B5	B5
5,27	B5-B11	B5-B11	B5-B11	B5	B5
6,23	B5-B11	B5-B11	B5-B11	B5	
7,55	B5-B11	B5-B11	B5-B11	B5	
8,40	B5-B11	B5-B11	B5-B11	B5	

CH - H - PH 102					
i	100	112	132	160	180
5,26			B5-B11	B5	B5
6,36			B5-B11	B5	B5
7,05			B5-B11	B5	B5
8,27			B5-B11	B5	B5
9,99			B5-B11	B5	B5
11,09			B5-B11	B5	B5
13,32	B5-B11	B5-B11	B5-B11	B5	B5
16,09	B5-B11	B5-B11	B5-B11	B5	B5
17,85	B5-B11	B5-B11	B5-B11	B5	B5
19,80	B5-B11	B5-B11	B5-B11	B5	B5
21,44	B5-B11	B5-B11	B5-B11	B5	B5
24,00	B5-B11	B5-B11	B5-B11	B5	B5
25,89	B5-B11	B5-B11	B5-B11	B5	B5
28,73	B5-B11	B5-B11	B5-B11	B5	B5
30,70	B5-B11	B5-B11	B5-B11	B5	
34,20	B5-B11	B5-B11	B5-B11	B5	
38,45	B5-B11	B5-B11	B5-B11		
41,30	B5-B11	B5-B11	B5-B11	B5	
45,82	B5-B11	B5-B11	B5-B11	B5	
51,52	B5-B11	B5-B11	B5-B11		

CH - H - PH 103					
i	090	100	112	132	160
55,47				B5-B11	B5
69,69		B5-B11	B5-B11	B5-B11	B5
79,80		B5-B11	B5-B11	B5-B11	B5
84,16		B5-B11	B5-B11	B5-B11	B5
93,36		B5-B11	B5-B11	B5-B11	B5
100,07		B5-B11	B5-B11	B5-B11	B5
120,84		B5-B11	B5-B11	B5-B11	B5
134,06		B5-B11	B5-B11	B5-B11	B5
143,40	B5-B11	B5-B11	B5-B11	B5-B11	
160,82	B5-B11	B5-B11	B5-B11	B5-B11	
181,07	B5-B11	B5-B11	B5-B11	B5-B11	
194,21	B5-B11	B5-B11	B5-B11	B5-B11	
215,45	B5-B11	B5-B11	B5-B11	B5-B11	
242,59	B5-B11	B5-B11	B5-B11	B5-B11	

2.6 PREDISPOSICIÓN

CH - H - PH 121				
i	132	160	180	200
1,23		B5	B5	B5
1,42		B5	B5	B5
1,81		B5	B5	B5
2,00	B5-B11	B5	B5	B5
2,48	B5-B11	B5	B5	B5
2,95	B5-B11	B5	B5	B5
3,14	B5-B11	B5	B5	B5
3,58	B5-B11	B5	B5	B5
4,12	B5-B11	B5	B5	B5
4,80	B5-B11	B5	B5	B5
5,21	B5-B11	B5	B5	
6,25	B5-B11	B5	B5	
7,70	B5-B11	B5	B5	

CH - H - PH 122				
i	132	160	180	200
5,27		B5	B5	B5
5,78		B5	B5	B5
7,05		B5	B5	B5
7,74		B5	B5	B5
8,48		B5	B5	B5
10,35		B5	B5	B5
12,66	B5-B11	B5	B5	B5
13,86	B5-B11	B5	B5	B5
16,92	B5-B11	B5	B5	B5
19,30	B5-B11	B5	B5	B5
20,57	B5-B11	B5	B5	B5
22,52	B5-B11	B5	B5	B5
24,47	B5-B11	B5	B5	
27,49	B5-B11	B5	B5	B5
29,86	B5-B11	B5	B5	
33,00	B5-B11	B5	B5	
36,13	B5-B11	B5	B5	
44,10	B5-B11	B5	B5	

CH - H - PH 123						
i	100	112	132	160	180	200
45,77			B5-B11	B5	B5	B5
55,87			B5-B11	B5	B5	B5
67,32	B5-B11	B5-B11	B5-B11	B5	B5	B5
73,71	B5-B11	B5-B11	B5-B11	B5	B5	B5
83,30	B5-B11	B5-B11	B5-B11	B5	B5	B5
89,97	B5-B11	B5-B11	B5-B11	B5	B5	B5
100,30	B5-B11	B5-B11	B5-B11	B5	B5	B5
108,34	B5-B11	B5-B11	B5-B11	B5	B5	B5
118,62	B5-B11	B5-B11	B5-B11	B5	B5	B5
128,18	B5-B11	B5-B11	B5-B11	B5	B5	
144,79	B5-B11	B5-B11	B5-B11	B5	B5	B5
155,22	B5-B11	B5-B11	B5-B11	B5	B5	
172,80	B5-B11	B5-B11	B5-B11	B5	B5	
189,19	B5-B11	B5-B11	B5-B11	B5	B5	
207,40	B5-B11	B5-B11	B5-B11	B5	B5	
230,92	B5-B11	B5-B11	B5-B11	B5	B5	
259,60	B5-B11	B5-B11	B5-B11			

CH - H - PH 142				
i	160	180	200	225
5,27	B5	B5	B5	B5
6,36	B5	B5	B5	B5
7,04	B5	B5	B5	B5
7,84	B5	B5	B5	B5
9,45	B5	B5	B5	B5
10,47	B5	B5	B5	B5
13,07	B5	B5	B5	B5
15,75	B5	B5	B5	B5
17,45	B5	B5	B5	B5
20,04	B5	B5	B5	B5
24,15	B5	B5	B5	B5
26,76	B5	B5	B5	B5
32,24	B5	B5	B5	B5
38,85	B5	B5	B5	B5
43,05	B5	B5	B5	B5

CH - H - PH 143				
i	132	160	180	200
48,35		B5	B5	B5
53,50	B5	B5	B5	B5
59,22	B5	B5	B5	B5
63,00	B5	B5	B5	B5
71,35	B5	B5	B5	B5
79,07	B5	B5	B5	B5
86,40	B5	B5	B5	B5
96,21	B5	B5	B5	B5
104,51	B5	B5	B5	
115,92	B5	B5	B5	B5
128,47	B5	B5	B5	B5
139,55	B5	B5	B5	
154,33	B5	B5	B5	
185,96	B5	B5	B5	
206,08	B5	B5	B5	

2.7 RODAMIENTOS

	HA30	HA40	HA50	HA60
	Estándar	Estándar	Estándar	Estándar
HA 1	1	1	1	1
HA 2/3	1	1	1	1

	H030	H040	H050	H060	H080	H100	H125	H140
	Estándar	Estándar	Estándar	Estándar	Estándar	Estándar	Estándar	Estándar
H 1/M	/	1	1	1	1	1	1	/
H 2/3	2	2	2	2	2	2	2	2

1 - Rodamientos de bola

2 - Rodamientos de rodillos

/ - No existen

2.8 CARGAS RADIALES

2.8.1 Información

El valor de carga radial [N] admisibile se indica en las tablas de prestaciones de los reductores y se refiere a la carga aplicada sobre la línea de centro del eje y en las condiciones más desfavorables como ángulo de aplicación y sentido de rotación. Las cargas axiales máximas admisibles son 1/5 del valor de carga radial indicado, cuando están aplicadas en combinación con la carga radial misma. En las tablas relacionadas a los ejes de salida se indica el valor máximo admisible; nunca se debe superar este valor, porque se refiere a la resistencia de la carcasa. Podrían presentarse condiciones particulares de carga radial superiores a los límites de catálogo; en este caso, ponerse en contacto con nuestro Servicio técnico e indicar todos los datos de la aplicación: dirección de carga, sentido de rotación del eje, tipo de servicio. La carga radial sobre el eje se calcula con la siguiente fórmula: **Fre=(2000*M*fz)/D≤Fr1 o Fr2**

- **Fre** [N] Carga radial resultante
- **M** [Nm] Par de torsión sobre el eje
- **D** [mm] Diámetro del elemento de transmisión montado sobre el eje
- **Fr1**-**Fr2** [N] Valor de carga radial máximo admitido (ver tablas correspondientes)
- **fz** = 1,1 piñón dentado - 1,4 piñón de cadena - 1,7 polea para correa trapezoidal - 2,5 polea plana

2.8.2 Entrada

Si la carga radial resultante no se aplica sobre el centro del eje, corregir la carga radial admisible Fr1 mediante la siguiente fórmula: **Frx=(Fr1*a)/(b+x)**

- **a** , **b** = valores indicados en las tablas
- **x** = distancia desde el punto de aplicación de la carga hasta la base del eje

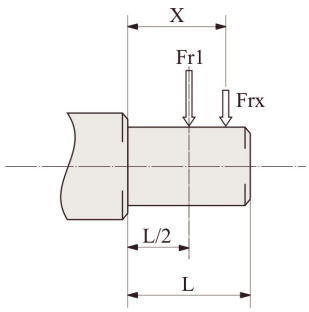

IH	A32/A33/A41/A42/A43/A51/A53/A63	A52/A61/A62
a	84	89
b	64	69
Fr1 max(**)	480	800

IH	041	051	061	081	101	121
a	105	105	105	137	175	175
b	80	80	80	108	135	135
Fr1 max(**)	1320	1800	2200	2500	3000	3000

IH	032/033	042/043	052/053	062/063	082/083	102/103	122 123	142/143
a	105	105	105	137	137	175	175	225
b	80	80	80	108	108	135	135	170
Fr1 max(**)	2200	2200	2500	3600	3600	7200	7200	15000

(**Fr1 max) Valor máx. admisible del reductor en condiciones estáticas y/o para funcionamiento limitado. Para cargas radiales en servicio continuo verificar los valores de las tablas de prestaciones calculados en función de la carcasa, del eje y de los rodamientos.

2.8 CARGAS RADIALES

2.8.3 Salida

Si la carga radial resultante no se aplica sobre el centro del eje, corregir la carga radial admisible Fr2 mediante la siguiente fórmula: **Frx=(Fr2*a)/(b+x)**

- **a** , **b** = valores indicados en las tablas
- **x** = distancia desde el punto de aplicación de la carga hasta la base del eje

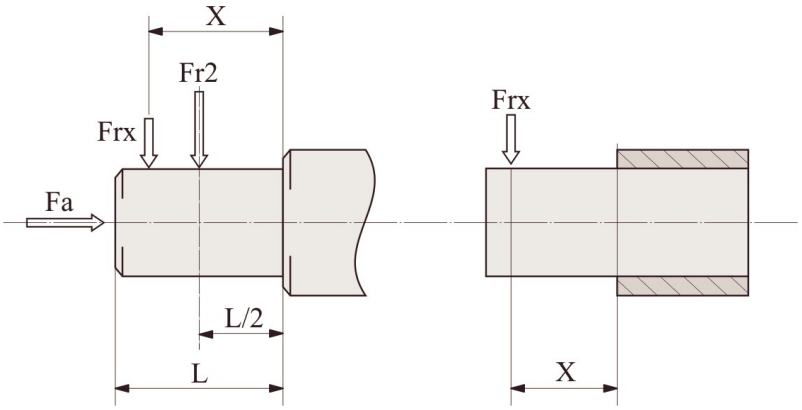

H	A31	A41	A51	A61	A32/A33	A42/A43	A52/A53	A62/A63
a	78,5	81	83	103	105	115	135	155
b	58,5	61	58	73	85	90	105	115
Fr2 max(**)	1100	1100	3000	4500	2000	4300	6000	8000

H	041	051	061	081	101	121
a	89	98	115	151	210	232
b	79	73	85	111	155	177
Fr2 max(**)	1000	2500	3700	4000	5000	6000
Fa max (*)	5500	6500	7000	8500	11500	13500

H	032/033	042/043	052/053	062/063	082/083	102/103	122/123	142/143
a	120	138	169	195	238	281	331	367
b	96	108	134	155	188	221	261	282
Fr2 max(**)	5500	6600	8000	12000	18000	22000	30000	55000

(**Fr2) Valor máx. admisible del reductor en condiciones estáticas y/o para funcionamiento limitado. Para cargas radiales en servicio continuo verificar los valores de las tablas de prestaciones calculados en función de la carcasa, del eje y de los rodamientos.

(* Fa) Fuerza axial máx. admisible en un único sentido con rodamiento axial (bajo pedido).

2.9 LUBRICACIÓN

2.9.1 Información

En caso de temperaturas ambiente no previstas en la tabla, ponerse en contacto con nuestro Servicio técnico. En caso de temperaturas inferiores a -30°C o superiores a 60°C, es necesario utilizar anillos de retén con mezclas especiales. Para los campos de funcionamiento con temperaturas inferiores a 0°C, es necesario cumplir con lo que sigue:

1. Los motores tienen que ser idóneos al funcionamiento con la temperatura ambiente prevista.
2. La potencia del motor eléctrico debe adecuarse para superar los mayores pares de arranque solicitados.
3. En caso de reductor con carcasa de fundición, cuidado con las cargas de choque porque la fundición puede presentar problemas de fragilidad con temperaturas inferiores a los -15°C.
4. Durante las primeras fases de servicio podrían surgir problemas de lubricación debidos a la elevada viscosidad del aceite y es por lo tanto oportuno efectuar una rotación en "vacío" por algunos minutos.

El cambio de aceite (productos NO Atex) debe realizarse tras aproximadamente 10.000 horas/2 años de funcionamiento, este período dependerá del tipo de servicio y del ambiente en el cual trabaja el reductor. Para grupos suministrados sin tapones para aceite la lubricación es permanente, por lo que no requieren mantenimiento.

2.9.2 Lubricantes

Especificaciones de lubricante aconsejados por Motovario.
Salvo otros acuerdos, todos los grupos se entregan con aceite ENI BLASIA 220.

	HA32/3 ÷ A62/3 / H032/3 ÷ 142/3	
	Aceite mineral	
T_{amb}°C ISO/SAE	(-5) ÷ (+40) ISO VG220	(-15) ÷ (+25) ISO VG150
ENI	BLASIA 220	BLASIA 150
SHELL	OMALA OIL220	OMALA OIL150
KLUBER	Kluberoil GEM 1-220N	Kluberoil GEM 1-150N
MOBIL	MOBILGEAR 600 XP220	MOBILGEAR 600 XP150
CASTROL	ALPHA SP 220	ALPHA SP 150
BP	ENERGOL GR-XP220	ENERGOL GR-XP150

2.9.3 Lubricantes especiales

	T_{amb}°C	Aceite sintético basado en poliglicoles
ENI	**(-30) ÷ (+30)**	Blasia S 150 (ISO VG150)
	(-20) ÷ (+40)	Blasia S 220 (ISO VG220)
MOBIL	**(-45) ÷ (+0)**	SCH 624 (ISO VG32)
	(-40) ÷ (+5)	SCH 626 (ISO VG68)
KLUBER	**(-40) ÷ (+5)**	Klubersynth GH 6-32 (ISO VG32)
	(-35) ÷ 10)	Klubersynth GH 6-80 (ISO VG80)
	(-30) ÷ (+40)	Klubersynth GH 6-150 (ISO VG150)
	(-25) ÷ (+40)	Klubersynth GH 6-220 (ISO VG220)
	(-15) ÷ (+50)	Klubersynth GH 6-460 (ISO VG460)
	(-10) ÷ (+70)	Klubersynth GH 6-680 (ISO VG680)

	T_{amb}°C	Aceite sintético basado en poliglicoles para sector alimentario
KLUBER	**(-30) ÷ (+15)**	Klubersynth UH1-6 100 (ISO VG100)
	(-25) ÷ (+40)	Klubersynth UH1-6 220 (ISO VG220)
	(-15) ÷ (+40)	Klubersynth UH1-6 320 (ISO VG320)
	(-15) ÷ (+50)	Klubersynth UH1-6 460 (ISO VG460)
	(-10) ÷ (+50)	Klubersynth UH1-6 680 (ISO VG680)

Para el uso de lubricantes especiales contactar con la asistencia técnica.

2.9 LUBRICACIÓN

2.9.4 Cantidad

- Para los reductores HA.. de 2, 3 trenes y para los reductores serie H de 1, 2, 3 trenes, es necesario especificar siempre la posición de montaje prevista.
- Los reductores de la serie HA.. de 1, 2, 3 trenes en todos los tamaños, serie H... de 1 tren en los tamaños 040, 050, 060 y serie H... de 2, 3 trenes en los tamaños 030, 040, 050 se suministran con lubricante, no disponen de tapón de aceite y no necesitan ningún mantenimiento.
- Los reductores serie H... de 1 tren en los tamaños 080, 100, 125 y de 2, 3 trenes en los tamaños 060, 080, 100, 125, 140 se suministran con lubricante y disponen de tapones para todas las posiciones de montaje previstas en el catálogo.

Es necesario, una vez instalado el reductor en la máquina, sustituir el tapón cerrado, utilizado durante el transporte, por el tapón respiradero que se adjunta.
Las cantidades de aceite en la tabla (litros ~) son únicamente indicativas y para un relleno correcto se tendrá que hacer referencia al tapón de nivel o a la varilla de nivel si estuviera presente. Las eventuales diferencias en el nivel pueden depender de tolerancias de fabricación, pero también del montaje del grupo o del plano de montaje en las instalaciones del cliente. Por dicho motivo, es oportuno que el cliente compruebe y, si es necesario, restablezca el nivel con el grupo instalado.

H - CH	HA31	HA41	CHA41	A51	A61	A32	A42	A52	A62	A33	A43	A53	A63
B3-B5	0,07	0,23	0,13	0,25	0,62	0,68	0,7	1,2	1,9	1,1	1,16	1,9	2,4
B8													
B6-B7													
V5-V1								1,6	2,1			2,5	3,1
V6-V3													

H - CH	041	051	061	081	101	121	041M	051M	061M	081M	101M	121M
B3-B5	0,5	0,7	0,7	1,45	3,5	4,7	0,5	0,5	0,5	1,5	3,5	3,9
B8	0,5	0,5	0,5	1,5	3,5	3,9	0,5	0,7	0,7	1,45	3,5	4,7
B6-B7	0,5	0,7	0,7	1,5	3,5	4,1	0,5	0,7	0,7	1,5	3,5	4,1
V5-V1	0,5	0,7	0,9	1,5	3,5	4,7	0,5	0,7	0,9	1,5	3,5	4,7
V6-V3	0,5	0,7	0,7	1,5	3,5	4,1	0,5	0,7	0,7	1,5	3,5	4,1

H - CH	032/033	042/043	052/053	062/063	082/083	102/103	122/123	142/143
B3-B5	0,8	1,2	1,4	2,4	4,5	8,1	12,5	22,5
B8	0,85	1,2	1,4	3,1	5	8,9	12,5	20
B6-B7	1	1,2	1,8	3	4,6	8,4	12,1	22,5
V5-V1	1,3	1,75	2,15	3,9	7,6	12,7	20,5	30,5
V6-V3	1,2	1,7	2,1	4,4	7,5	14,2	21	38

2.10 MOMENTOS DE INERCIA

Los siguientes valores del momento de inercia J1 son solo indicativos, respecto a los máximos calculados, y se refieren al eje de entrada del reductor.

HA-1	J_1 [Kg*m2]
A31	0,0001
A41	0,00005
A51	0,00008
A61	0,00042

HA-2/3	J_1 [Kg*m2]
A32/A33	0,00005
A42/A43	0,00005
A52/A53	0,00026
A62/A63	0,00032

H-1	J_1 [Kg*m2]
041	0,00008
051	0,00019
061	0,00046
081	0,0011
101	0,00345
121	0,00764

H-2/3	J_1 [Kg*m2]
032/033	0,00007
042/043	0,00007
052/053	0,00009
062/063	0,0002
082/083	0,00068
102/103	0,00106
122/123	0,00282
142/143	0,00442

3.1 REDUCTORES/MOTORREDUCTORES

3.1.1 HA31

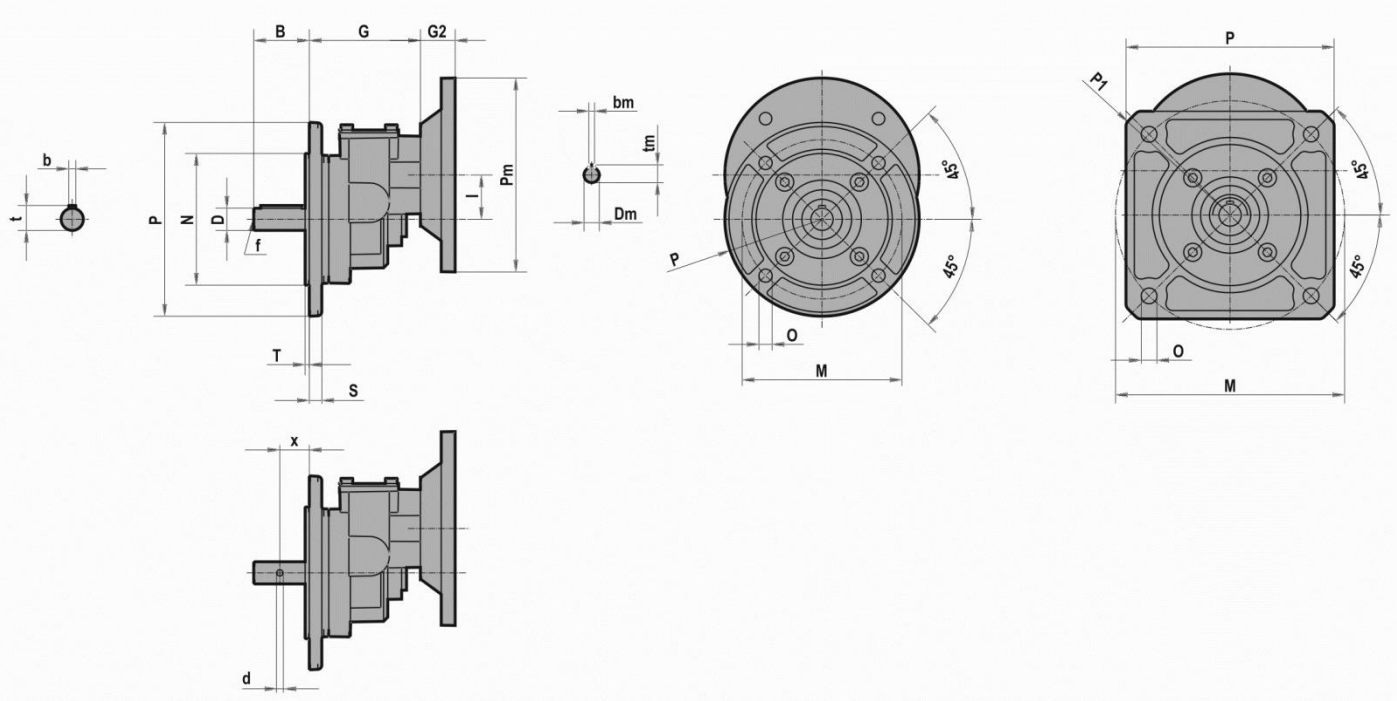

	D	B	b	t	x	d	f	G	I
HA31	11 j6	23	4	12,5	-	-	-	80	32
	14 j6	30	5	16	-	-	M6		
	16 j6	40	5	18	-	-	M6		
	19 j6	40	6	21,5	-	-	M6		
	16 j6	50	-	-	29	7	-		
	19 0/-0,2	60	-	-	37	6,5	-		
	19,7 +/-0,05	100	-	-	50	6	M8		
	20 j6	75	-	-	45	6	-		

	P	P1	M	N	O	S	T
HA31	116	150	127	-	M8	-	-
	138	160	127	-	M8	-	-
	140	-	115	95 f7	9,5	9	3
	150	200	165	-	11	-	-

IEC	Pm x Dm	G2
063	140x11	25
071	160x14	32
080	200x19	42

B5	Pm	Dm	bm	tm
063	140	11	4	12,8
071	160	14	5	16,3
080	200	19	6	21,8

3.1.2 HA.1

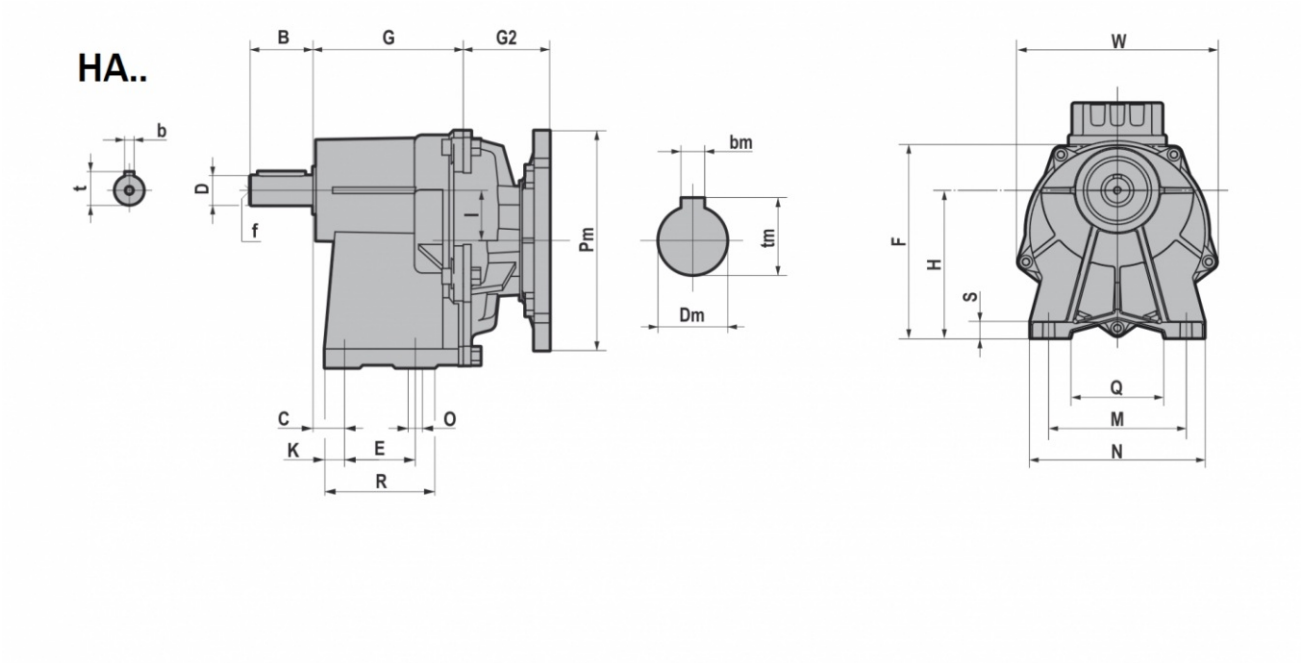

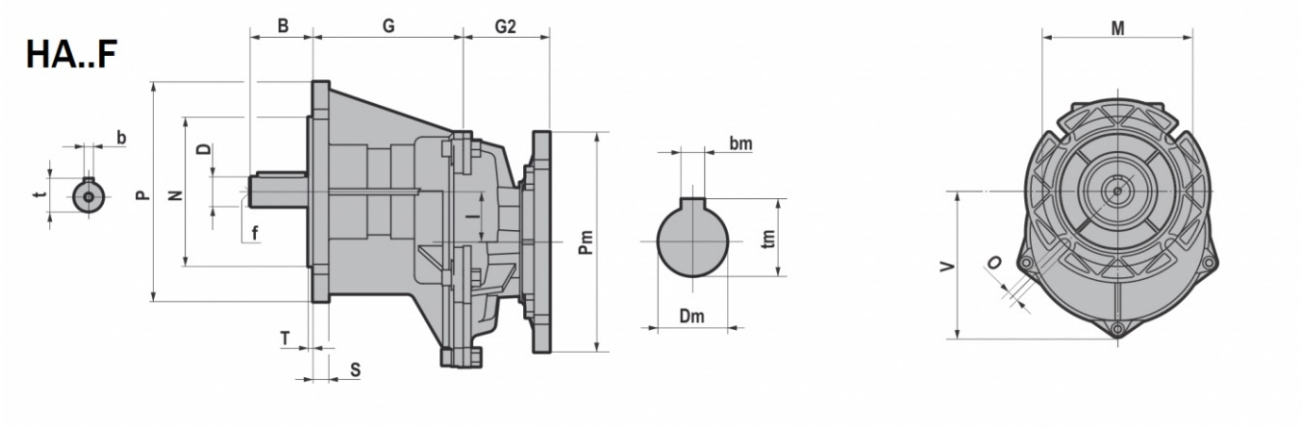

	D j6	B	C	E	F	G	H	I	K	M	N	O	Q	R	S	W	b	t	f
HA41/F	16	40	20	45	151	95,5	113	32	12,5	105	130	9	75	70	12	152	5	18	M6
	19																6	21,5	M6
HA51/F	24	50	6	70	169	104	130	32	15	150	180	11	115	100	12	152	8	27	M8
HA61/F	28	60	7,5	70	219,5	129	165	47,5	20	165	200	11	120	110	15	218	8	31	M8
	24	50															8	27	M8

	M	N f8	O	P	S	T	V
HA41F	115	95	9	140	10	3	111,5
HA51F	130	110	9	160	10	3,5	111,5
HA61F	165	130	11	200	15	3,5	161,5

			G2	
IEC	Pm x Dm	Pm x Dm	HA41/F - HA51/F	HA61/F
063	140X11	090x11	55	/
071	160X14	105x14	55	/
080	200X19	120x19	86	87,5
090	200X24	140x24	86	87,5
100-112	250X28	160x28	/	87,5

B5	Pm	Dm	bm	tm
063	140	11	4	12,8
071	160	14	5	16,3
080	200	19	6	21,8
090	200	24	8	27,3
100	250	28	8	31,3
112	250	28	8	31,3

B14	Pm	Dm	bm	tm
063	90	11	4	12,8
071	105	14	5	16,3
080	120	19	6	21,8
090	140	24	8	27,3
100	160	28	8	31,3
112	160	28	8	31,3

3.1.3 CHA.1

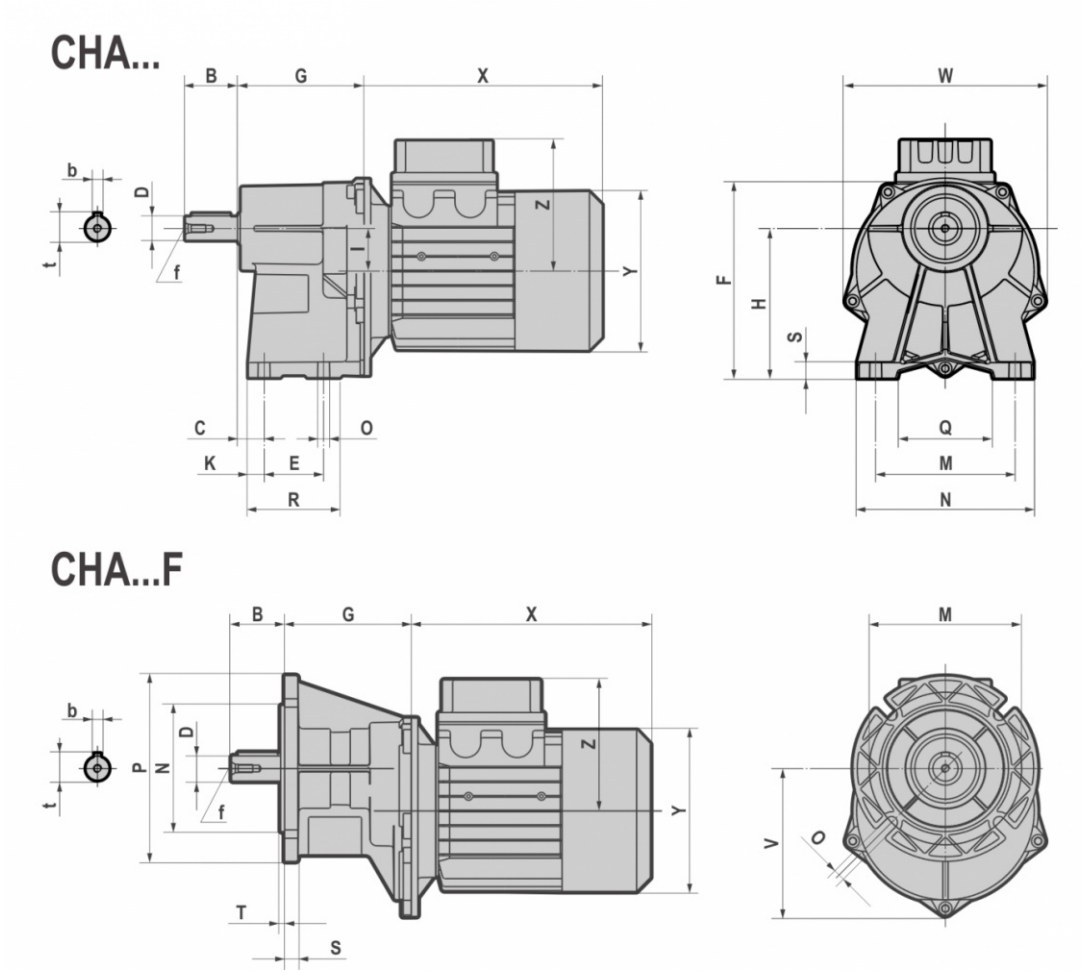

	D j6	B	C	E	F	G	H	I	K	M	N	O	Q	R	S	W	b	t	f
CHA41/F	16	40	20	45	151	95,5	113	32	12,5	105	130	9	75	70	12	152	5	18	M6
	19																6	21,5	M6
CHA51/F	24	50	6	70	169	104	130	32	15	150	180	11	115	100	12	152	8	27	M8
CHA61/F	28	60	7,5	70	219,5	129	165	47,5	20	165	200	11	120	110	15	218	8	31	M8
	24	50															8	27	M8

	M	N f8	O	P	S	T	V
CHA41F	115	95	9	140	10	3	111,5
CHA51F	130	110	9	160	10	3,5	111,5
CHA61F	165	130	11	200	15	3,5	161,5

		T (IE1 - IE2)						
		063	071	080	090S	090L	100	112
CHA41/F CHA51/F	X	180	205	223	232	257	/	/
	Y	121	139	158	173	173	/	/
	Z	104	112	122	130	130	/	/
CHA61/F	X	/	/	218	232	257	290	302
	Y	/	/	158	173	173	191	211
	Z	/	/	122	130	130	139	154

		TB (IE1 - IE2)						
		063	071	080	090S	090L	100	112
CHA41/F CHA51/F	X	238	271	294	309	334	/	/
	Y	121	139	158	173	173	/	/
	Z	119	129	137	157	157	/	/
CHA61/F	X	/	/	290	309	334	372	400
	Y	/	/	158	173	173	191	211
	Z	/	/	137	157	157	230	230

3.1.4 IHA.1

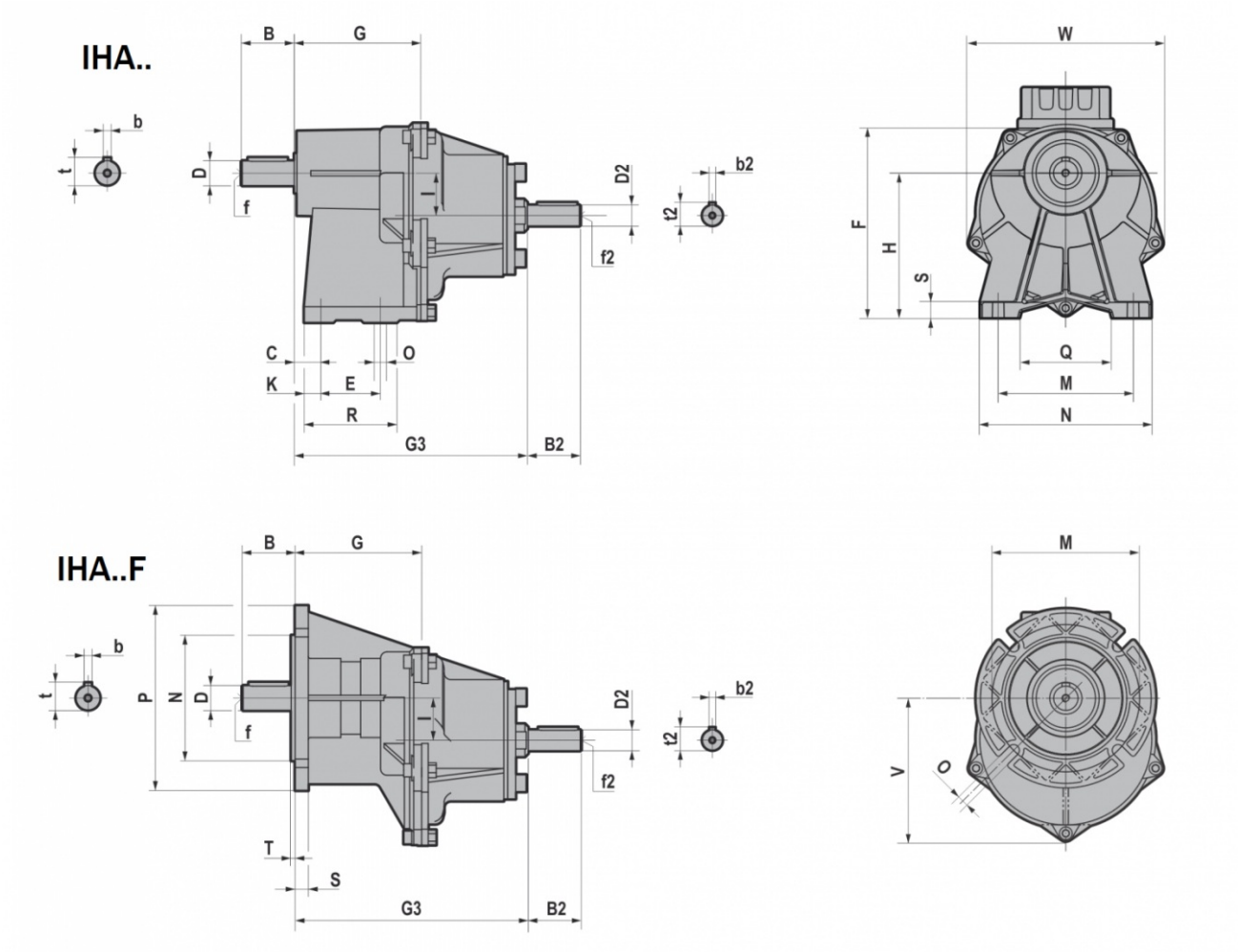

	D j6	B	C	E	F	G	H	I	K	M	N	O	Q	R	S	W	b	t	f
IHA41/F	16	40	20	45	151	95,5	113	32	12,5	105	130	9	75	70	12	152	5	18	M6
	19																6	21,5	M6
IHA51/F	24	50	6	70	169	104	130	32	15	150	180	11	115	100	12	152	8	27	M8
IHA61/F	28	60	7,5	70	219,5	129	165	47,5	20	165	200	11	120	110	15	218	8	31	M8
	24	50															8	27	M8

	M	N f8	O	P	S	T	V
IHA41F	115	95	9	140	10	3	111,5
IHA51F	130	110	9	160	10	3,5	111,5
IHA61F	165	130	11	200	15	3,5	161,5

	G3	D2 j6	B2	b2	f2	t2
IHA41/F	176	16	40	5	M6	18
IHA51/F	184,5	16	40	5	M6	18
IHA61/F	209	19	40	6	M6	21,5

3.1.5 HA.2

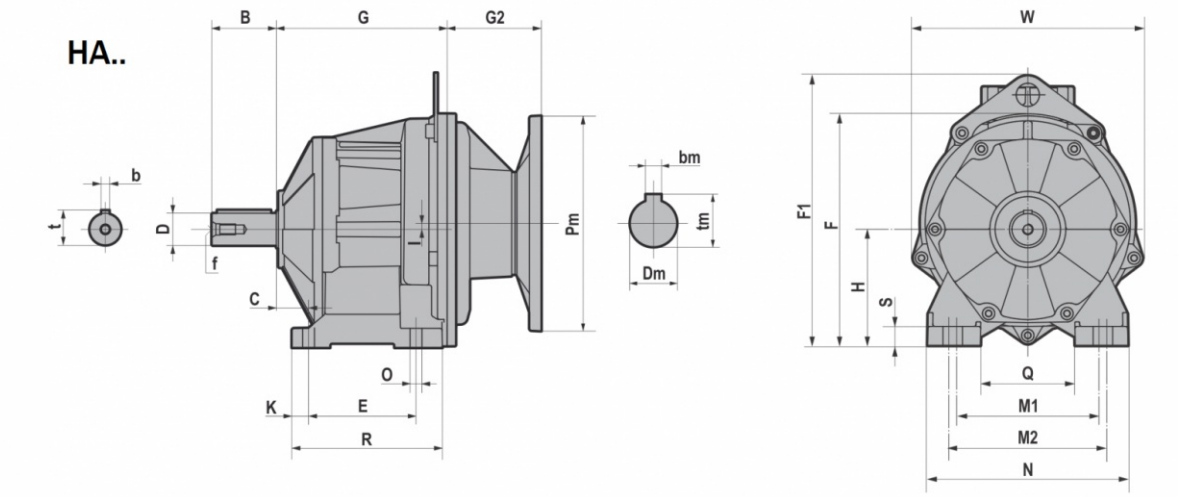

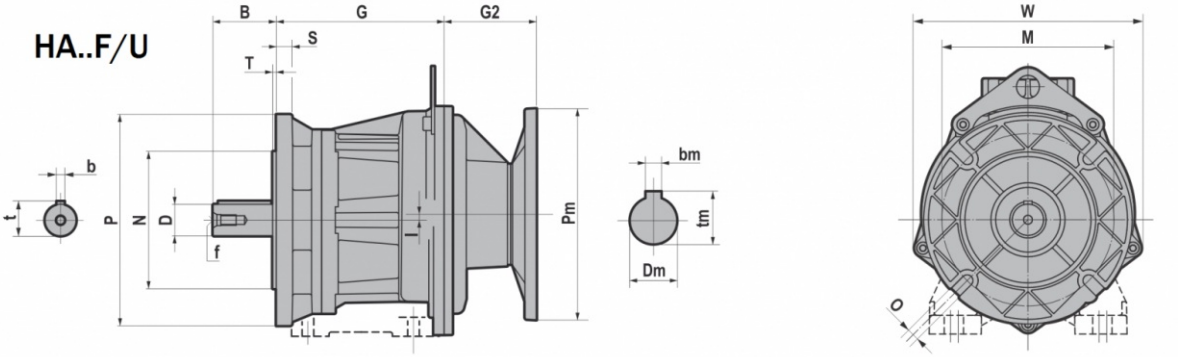

HA../F/U	D j6	B	b	t	f	C	E	F	F1	G	H	I	K	M1	M2	N	O	Q	R	S	W
HA32	20	40	6	22,5	M6	18	80	155	/	117,5	75	10	13	110	120	145	9	75	111	15	152
	19	40	6	21,5	M6																
	16	40	5	18	M6																
	14	30	5	16	M6																
HA42	25	50	8	28	M10	25	85	160	/	124,5	80	10	13	110	120	145	9	75	111	15	152
	28	60	8	31	M10																
	24	50	8	27	M8																
	22	50	6	24,5	M8																
	20	40	6	22,5	M6																
	19	40	6	21,5	M6																
HA52	30	60	8	33	M10	30	100	217,5	255,5	159	110	5,5	15,5	135	150	190	11	90	140	18	218
	35	70	10	38	M12																
	32	60	10	35	M10																
	28	60	8	31	M10																
	25	50	8	28	M10																
	24	50	8	27	M8																
HA62	40	80	12	43	M16	35	110	237,5	275,5	168	120	15,5	20	170	185	230	14	120	150	20	218
	35 k6	70	10	38	M12																
	30	60	8	33	M10																
	28	60	8	31	M10																

3.1 REDUCTORES/MOTORREDUCTORES

	P	M	N f8	O	G	I	S	T	W
HA32F/U	140	115	95	9	117,5	10	10	3	152
	120	100	80						
HA42F/U	160	130	110	9	124,5	10	10	3,5	152
	140	115	95						
HA52F/U	200	165	130	11	159	5,5	15	3,5	218
	160	130	110						
HA62F/U	250	215	180	14	168	15,5	15	4	218
	200	165	130						

			G2	
IEC	Pm x Dm	Pm x Dm	HA32/F/U - HA42/F/U	HA52/F/U - HA62/F/U
063	**140X11**	**090x11**	55,0	/
071	**160X14**	**105x14**	55,0	/
080	**200X19**	**120x19**	86,0	87,5
090	**200X24**	**140x24**	86,0	87,5
100-112	**250X28**	**160x28**	/	87,5

B5	Pm	Dm	bm	tm
063	140	11	4	12,8
071	160	14	5	16,3
080	200	19	6	21,8
090	200	24	8	27,3
100	250	28	8	31,3
112	250	28	8	31,3

B14	Pm	Dm	bm	tm
063	90	11	4	12,8
071	105	14	5	16,3
080	120	19	6	21,8
090	140	24	8	27,3
100	160	28	8	31,3
112	160	28	8	31,3

3.1.6 CHA.2

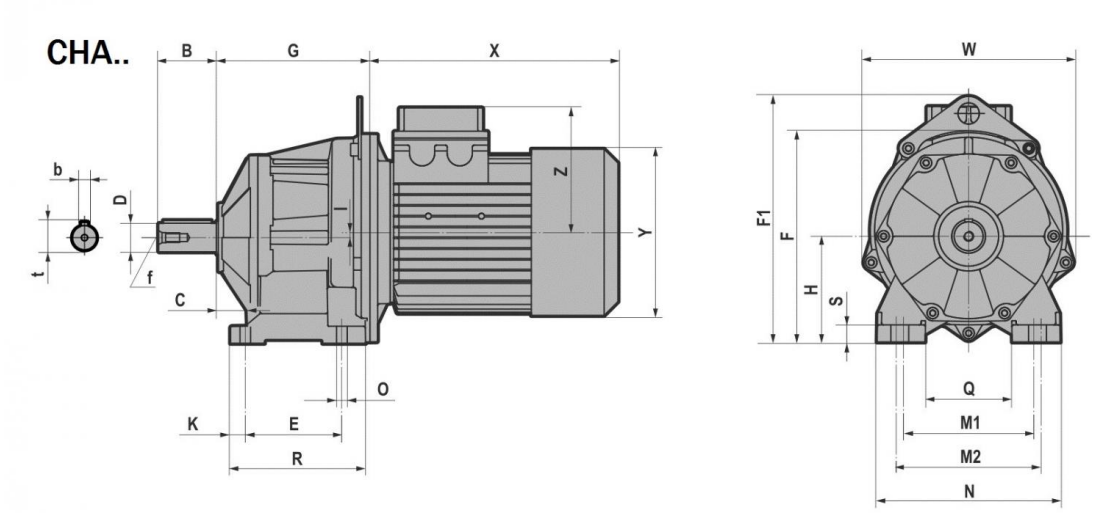

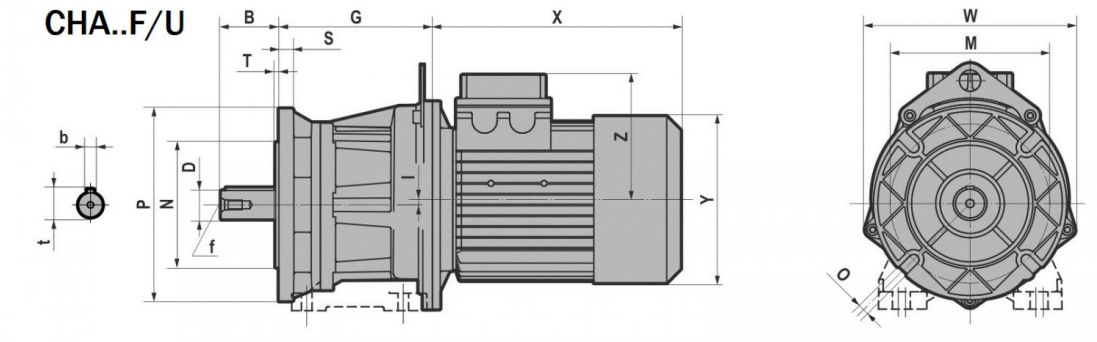

CHA../F/U	D j6	B	b	t	f	C	E	F	F1	G	H	I	K	M1	M2	N	O	Q	R	S	W
CHA32	20	40	6	22,5	M6	18	80	155	/	117,5	75	10	13	110	120	145	9	75	111	15	152
	19	40	6	21,5	M6																
	16	40	5	18	M6																
	14	30	5	16	M6																
CHA42	25	50	8	28	M10	25	85	160	/	124,5	80	10	13	110	120	145	9	75	111	15	152
	28	60	8	31	M10																
	24	50	8	27	M8																
	22	50	6	24,5	M8																
	20	40	6	22,5	M6																
	19	40	6	21,5	M6																
CHA52	30	60	8	33	M10	30	100	217,5	255,5	159	110	5,5	15,5	135	150	190	11	90	140	18	218
	35	70	10	38	M12																
	32	60	10	35	M10																
	28	60	8	31	M10																
	25	50	8	28	M10																
	24	50	8	27	M8																
CHA62	40	80	12	43	M16	35	110	237,5	275,5	168	120	15,5	20	170	185	230	14	120	150	20	218
	35 k6	70	10	38	M12																
	30	60	8	33	M10																
	28	60	8	31	M10																

3.1 REDUCTORES/MOTORREDUCTORES

	P	M	N f8	O	G	I	S	T	W
CHA32F/U	140	115	95	9	117,5	10	10	3	152
	120	100	80						
CHA42F/U	160	130	110	9	124,5	10	10	3,5	152
	140	115	95						
CHA52F/U	200	165	130	11	159	5,5	15	3,5	218
	160	130	110						
CHA62F/U	250	215	180	14	168	15,5	15	4	218
	200	165	130						

T (IE1 - IE2)								
CHA..F/U		063	071	080	090S	090L	100	112
CHA32 CHA42	X	180	205	223	232	257	/	/
	Y	121	139	158	173	173	/	/
	Z	104	112	122	130	130	/	/
CHA52 CHA62	X	/	/	218	232	257	290	302
	Y	/	/	158	173	173	191	211
	Z	/	/	122	130	130	139	154

TB (IE1 - IE2)								
CHA..F/U		063	071	080	090S	090L	100	112
CHA32 CHA42	X	238	271	294	309	334	/	/
	Y	121	139	158	173	173	/	/
	Z	119	129	137	157	157	/	/
CHA52 CHA62	X	/	/	290	309	334	372	400
	Y	/	/	158	173	173	191	211
	Z	/	/	137	157	157	230	230

3.1.7 IHA.2

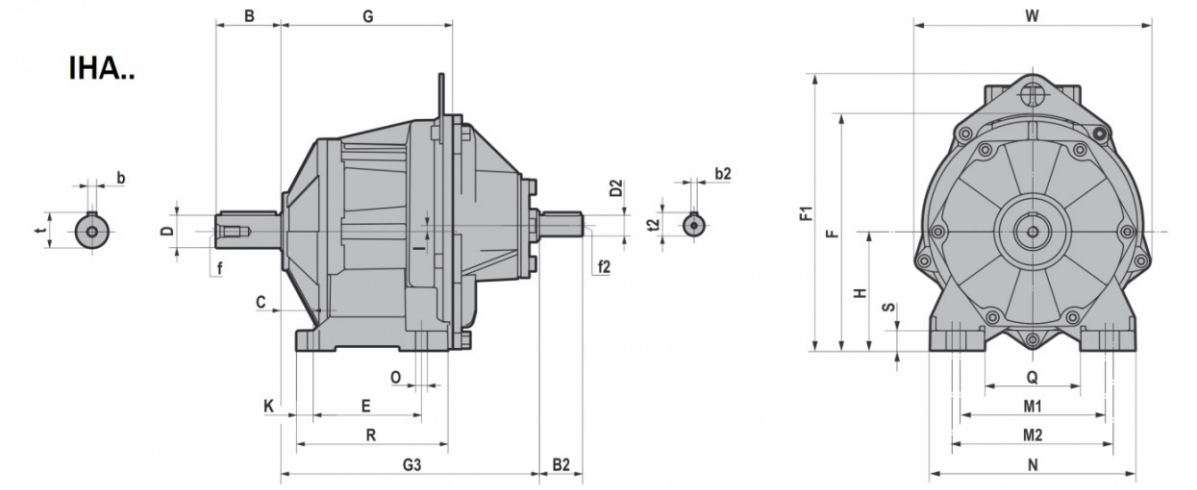

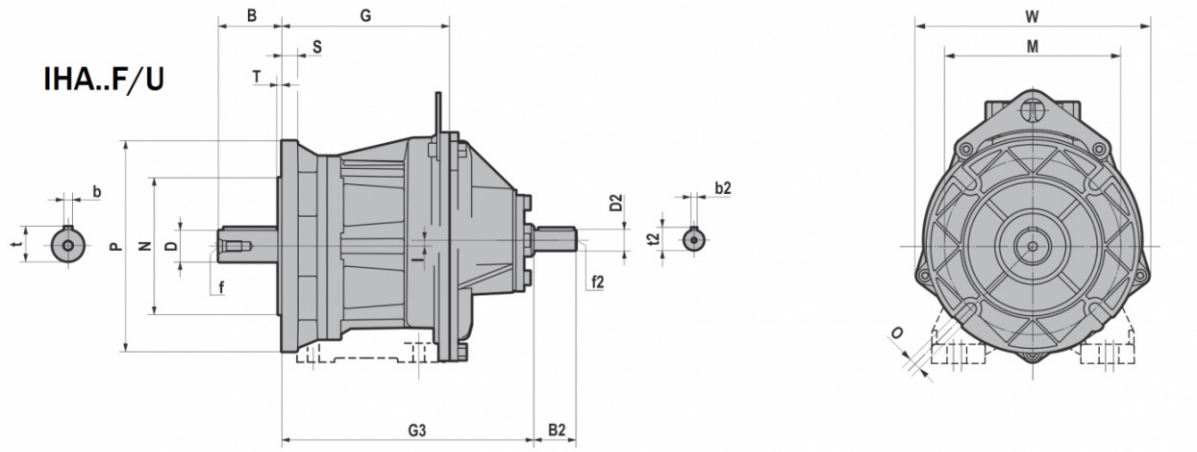

IHA../F/U	D j6	B	b	t	f	C	E	F	F1	G	H	I	K	M1	M2	N	O	Q	R	S	W
IHA32	20	40	6	22,5	M6	18	80	155	/	117,5	75	10	13	110	120	145	9	75	111	15	152
	19	40	6	21,5	M6																
	16	40	5	18	M6																
	14	30	5	16	M6																
IHA42	25	50	8	28	M10	25	85	160	/	124,5	80	10	13	110	120	145	9	75	111	15	152
	28	60	8	31	M10																
	24	50	8	27	M8																
	22	50	6	24,5	M8																
	20	40	6	22,5	M6																
	19	40	6	21,5	M6																
IHA52	30	60	8	33	M10	30	100	217,5	255,5	159	110	5,5	15,5	135	150	190	11	90	140	18	218
	35	70	10	38	M12																
	32	60	10	35	M10																
	28	60	8	31	M10																
	25	50	8	28	M10																
	24	50	8	27	M8																
IHA62	40	80	12	43	M16	35	110	237,5	275,5	168	120	15,5	20	170	185	230	14	120	150	20	218
	35 k6	70	10	38	M12																
	30	60	8	33	M10																
	28	60	8	31	M10																

3.1 REDUCTORES/MOTORREDUCTORES

	P	M	N f8	O	G	I	S	T	W
IHA32F/U	140	115	95	9	117,5	10	10	3	152
	120	100	80						
IHA42F/U	160	130	110	9	124,5	10	10	3,5	152
	140	115	95						
IHA52F/U	200	165	130	11	159	5,5	15	3,5	218
	160	130	110						
IHA62F/U	250	215	180	14	168	15,5	15	4	218
	200	165	130						

	G3	D2 j6	B2	b2	f2	t2
IHA32/F/U	198	16	40	5	M6	18
IHA42/F/U	205	16	40	5	M6	18
IHA52/F/U	239	19	40	6	M6	21,5
IHA62/F/U	248	19	40	6	M6	21,5

3.1.8 HA.3

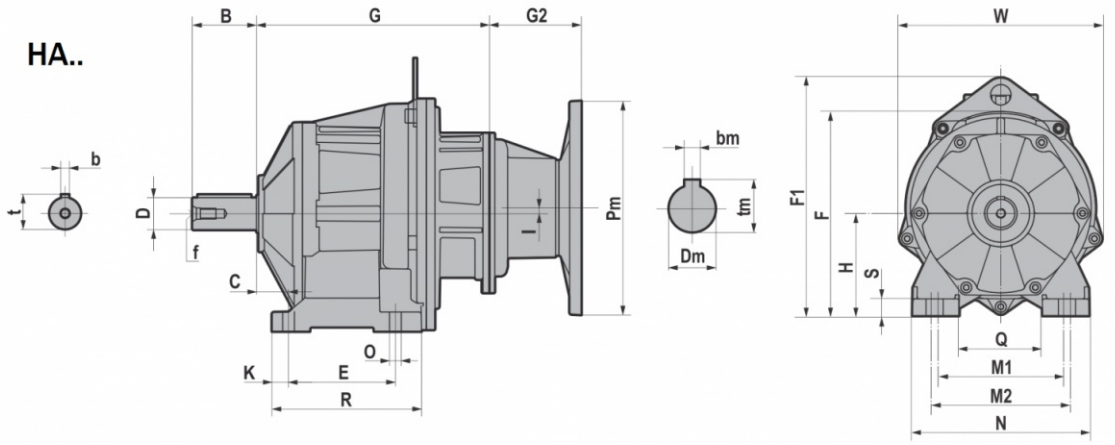

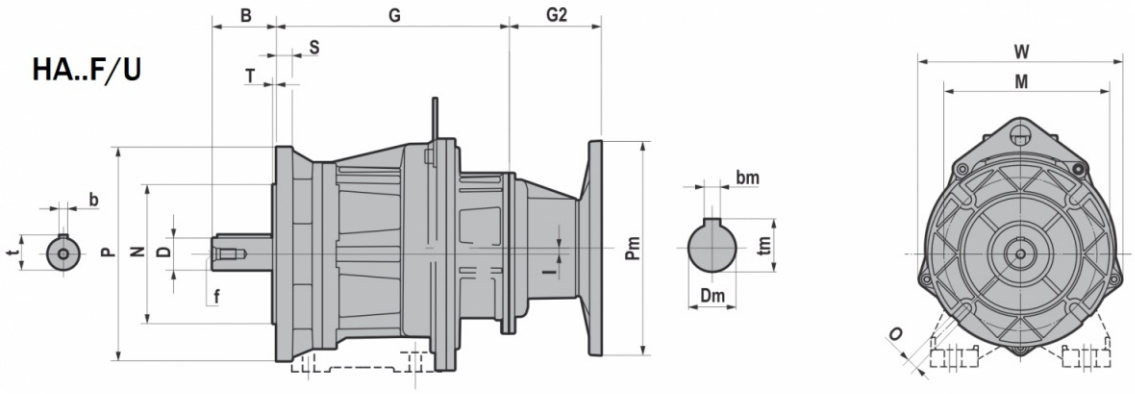

HA..F/U	D j6	B	b	t	f	C	E	F	F1	G	H	I	K	M1	M2	N	O	Q	R	S	W
HA33	20	40	6	22,5	M6	18	80	155	/	117,5	75	10	13	110	120	145	9	75	111	15	152
	19	40	6	21,5	M6																
	16	40	5	18	M6																
	14	30	5	16	M6																
HA43	25	50	8	28	M10	25	85	160	/	124,5	80	10	13	110	120	145	9	75	111	15	152
	28	60	8	31	M10																
	24	50	8	27	M8																
	22	50	6	24,5	M8																
	20	40	6	22,5	M6																
	19	40	6	21,5	M6																
HA53	30	60	8	33	M10	30	100	217,5	255,5	159	110	5,5	15,5	135	150	190	11	90	140	18	218
	35	70	10	38	M12																
	32	60	10	35	M10																
	28	60	8	31	M10																
	25	50	8	28	M10																
	24	50	8	27	M8																
HA63	40	80	12	43	M16	35	110	237,5	275,5	168	120	15,5	20	170	185	230	14	120	150	20	218
	35 k6	70	10	38	M12																
	30	60	8	33	M10																
	28	60	8	31	M10																

3.1 REDUCTORES/MOTORREDUCTORES

	P	M	N f8	O	G	I	S	T	W
HA33F/U	140	115	95	9	117,5	10	10	3	152
	120	100	80						
HA43F/U	160	130	110	9	124,5	10	10	3,5	152
	140	115	95						
HA53F/U	200	165	130	11	159	5,5	15	3,5	218
	160	130	110						
HA63F/U	250	215	180	14	168	15,5	15	4	218
	200	165	130						

			G2
IEC	Pm x Dm	Pm x Dm	HA33/F/U - HA43/F/U - HA53/F/U - HA63/F/U
063	**140X11**	**090x11**	55
071	**160X14**	**105x14**	55
080	**200X19**	**120x19**	86
090	**200X24**	**140x24**	86

B5	Pm	Dm	bm	tm
063	140	11	4	12,8
071	160	14	5	16,3
080	200	19	6	21,8
090	200	24	8	27,3

B14	Pm	Dm	bm	tm
063	90	11	4	12,8
071	105	14	5	16,3
080	120	19	6	21,8
090	140	24	8	27,3

3.1.9 CHA.3

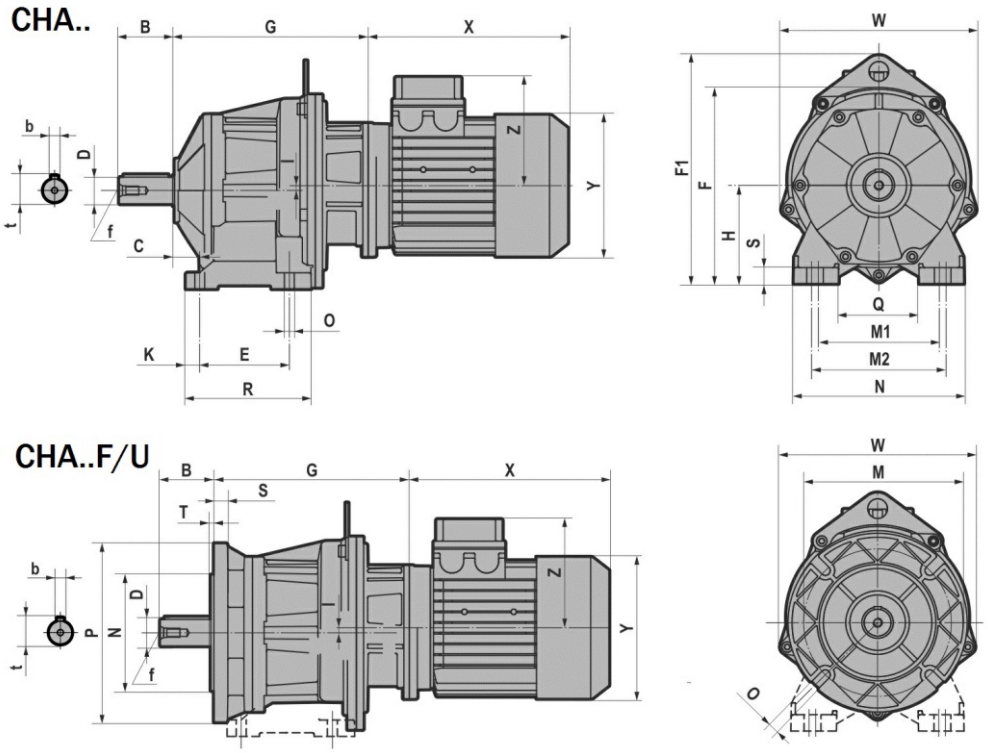

CHA..F/U	D j6	B	b	t	f	C	E	F	F1	G	H	I	K	M1	M2	N	O	Q	R	S	W
CHA33	20	40	6	22,5	M6	18	80	155	/	117,5	75	10	13	110	120	145	9	75	111	15	152
	19	40	6	21,5	M6																
	16	40	5	18	M6																
	14	30	5	16	M6																
CHA43	25	50	8	28	M10	25	85	160	/	124,5	80	10	13	110	120	145	9	75	111	15	152
	28	60	8	31	M10																
	24	50	8	27	M8																
	22	50	6	24,5	M8																
	20	40	6	22,5	M6																
	19	40	6	21,5	M6																
CHA53	30	60	8	33	M10	30	100	217,5	255,5	159	110	5,5	15,5	135	150	190	11	90	140	18	218
	35	70	10	38	M12																
	32	60	10	35	M10																
	28	60	8	31	M10																
	25	50	8	28	M10																
	24	50	8	27	M8																
CHA63	40	80	12	43	M16	35	110	237,5	275,5	168	120	15,5	20	170	185	230	14	120	150	20	218
	35 k6	70	10	38	M12																
	30	60	8	33	M10																
	28	60	8	31	M10																

3.1 REDUCTORES/MOTORREDUCTORES

	P	M	N f8	O	G	I	S	T	W
CHA33F/U	140	115	95	9	117,5	10	10	3	152
	120	100	80						
CHA43F/U	160	130	110	9	124,5	10	10	3,5	152
	140	115	95						
CHA53F/U	200	165	130	11	159	5,5	15	3,5	218
	160	130	110						
CHA63F/U	250	215	180	14	168	15,5	15	4	218
	200	165	130						

T (IE1 - IE2)						
CHA..F/U		063	071	080	090S	090L
CHA33 CHA43 CHA53 CHA63	X	180	205	223	232	257
	Y	121	139	158	173	173
	Z	104	112	122	130	130

TB (IE1 - IE2)						
CHA..F/U		063	071	080	090S	090L
CHA33 CHA43 CHA53 CHA63	X	238	271	294	309	334
	Y	121	139	158	173	173
	Z	119	129	137	157	157

3.1.10 IHA.3

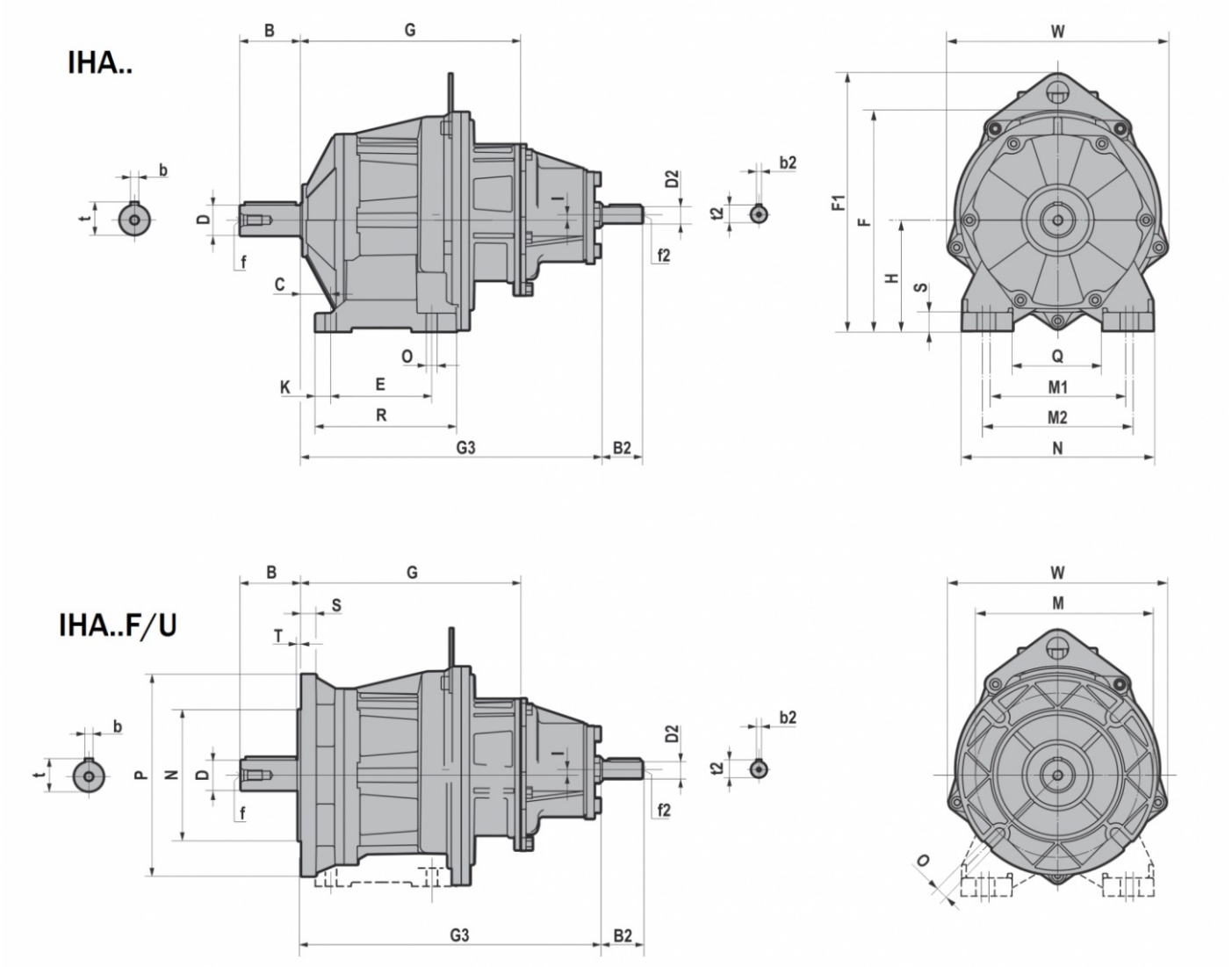

3.1 REDUCTORES/MOTORREDUCTORES

IHA..F/U	D j6	B	b	t	f	C	E	F	F1	G	H	I	K	M1	M2	N	O	Q	R	S	W
IHA33	20	40	6	22,5	M6	18	80	155	/	117,5	75	10	13	110	120	145	9	75	111	15	152
	19	40	6	21,5	M6																
	16	40	5	18	M6																
	14	30	5	16	M6																
IHA43	25	50	8	28	M10	25	85	160	/	124,5	80	10	13	110	120	145	9	75	111	15	152
	28	60	8	31	M10																
	24	50	8	27	M8																
	22	50	6	24,5	M8																
	20	40	6	22,5	M6																
	19	40	6	21,5	M6																
IHA53	30	60	8	33	M10	30	100	217,5	255,5	159	110	5,5	15,5	135	150	190	11	90	140	18	218
	35	70	10	38	M12																
	32	60	10	35	M10																
	28	60	8	31	M10																
	25	50	8	28	M10																
	24	50	8	27	M8																
IHA63	40	80	12	43	M16	35	110	237,5	275,5	168	120	15,5	20	170	185	230	14	120	150	20	218
	35 k6	70	10	38	M12																
	30	60	8	33	M10																
	28	60	8	31	M10																

	P	M	N f8	O	G	I	S	T	W
IHA33F/U	140	115	95	9	117,5	10	10	3	152
	120	100	80						
IHA43F/U	160	130	110	9	124,5	10	10	3,5	152
	140	115	95						
IHA53F/U	200	165	130	11	159	5,5	15	3,5	218
	160	130	110						
IHA63F/U	250	215	180	14	168	15,5	15	4	218
	200	165	130						

	G3	D2 j6	B2	b2	f2	t2
IHA33	251	16	40	5	M6	18
IHA43	258	16	40	5	M6	18
IHA53	299	16	40	5	M6	18
IHA63	308	16	40	5	M6	18

3.1.11 H..1

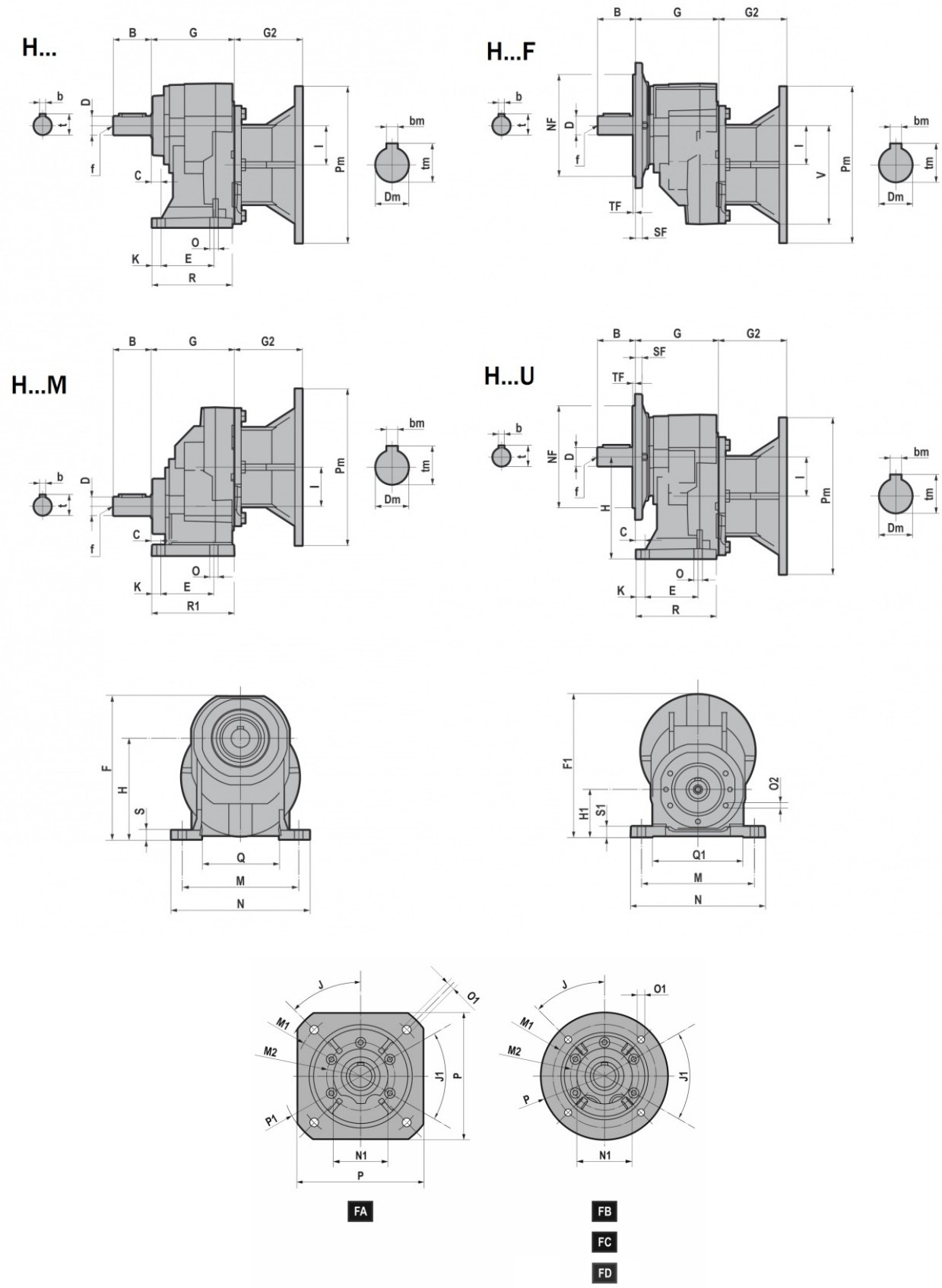
H...
H...F
H...M
H...U
B
G
G2
b
t
D
f
C
O
K
E
R
R1
I
Pm
bm
tm
Dm
NF
TF
SF
V
H
F
S
Q
M
N
F1
H1
S1
O2
Q1
J
O1
M1
M2
P1
J1
P
N1
FA
FB
FC
FD

3.1 REDUCTORES/MOTORREDUCTORES

H.../F/U/M	D	B	C	E	F	F1	G	H	H1	I	K	M	N	O	O2	Q	Q1	R	R1	S	S1	~V	b	t	f
H041	19 j6	40	13	45	168,5	168	100	120	50	42	12	105	130 125 (041M)	9	M8x17 (n.5)	74	55	86,5	98	9,5	8	118	6	21,5	M6
H051	24 j6	50	13	70	183,5	189	110	130	63	50	12	150	178	11	M8x17 (n.5)	100	121,5	106	109	11,5	14	126	8	27	M8
H061	28 j6	60	16	70	231	216	125	165	80	60	14	165	195	11	M8x17 (n.5)	110	135,5	120	123	15	16	136	8	31	M10
H081	38 k6	80	25	85	277	284	135	195	100	80	23	185	230 232 (081M)	14	M10x20 (n.7)	123	151	130	135	15	20	184	10	41	M12
H101	48 k6	110	19	130	355	377	180	252	125	100	17	240	295	18	M10x20 (n.6)	162	185,5	173	178	16	22	251,5	14	51,5	M16
H121	55 m6	110	25	150	422	426,5	210	300	160	115	22	280	340	18	M12x25 (n.7)	183	224	202	207	19	25	266,5	16	59	M20

		J	J1	M1	M2	NF f8	N1	O1	P	P1	SF	TF
H041F/U H051F/U	**FA**	45	45	Ø165	Ø85	130	70	11	160	Ø200	9	3,5
	FB			Ø130	Ø85	110		9	Ø160	/	9	3,5
	FC			Ø115	Ø85	95		9	Ø140	/	9	3
	FD			Ø100	Ø85	80		M8	Ø120	/	9	3
H061F/U	**FA**	45	45	Ø215	Ø105	180	90	14	200	Ø250	12	4
	FB			Ø165	Ø105	130		11	Ø200	/	12	3,5
H081F/U H101F/U	**FA**	45	45	Ø265	Ø130	230	110	14	250	Ø300	15	4
	FB			Ø215	Ø130	180		14	Ø250	/	15	4
	FC			Ø165	Ø130	130		11	Ø200	/	15	3,5
H121F/U	**FA**	45	45	Ø300	Ø165	250	130	18	300	Ø350	16	5
	FB			Ø265	Ø165	230		14	Ø300	/	16	4
	FC			Ø 215	Ø165	180		14	Ø250	/	16	4

		G2		
IEC	Pm x Dm	H041/F/U/M H051/F/U/M H061/F/U/M	H081/F/U/M	H101/F/U/M H121/F/U/M
071	**160x14**	69,0	/	/
080	**200x19**	90,0	70,0	/
090	**200x24**	90,0	70,0	/
100-112	**250x28**	105,0	85,0	75,5
132	**300x38**	/	110,0	100,5
160	**350x42**	/	/	148,0
180	**350x48**	/	/	148,0
200	**400x55**	/	/	185,0

B5	Pm	Dm	bm	tm
071	160	14	5	16,3
080	200	19	6	21,8
090	200	24	8	27,3
100	250	28	8	31,3
112	250	28	8	31,3
132	300	38	10	41,3
160	350	42	12	45,3
180	350	48	14	51,8
200	400	55	16	59,3

3.1.12 CH..1

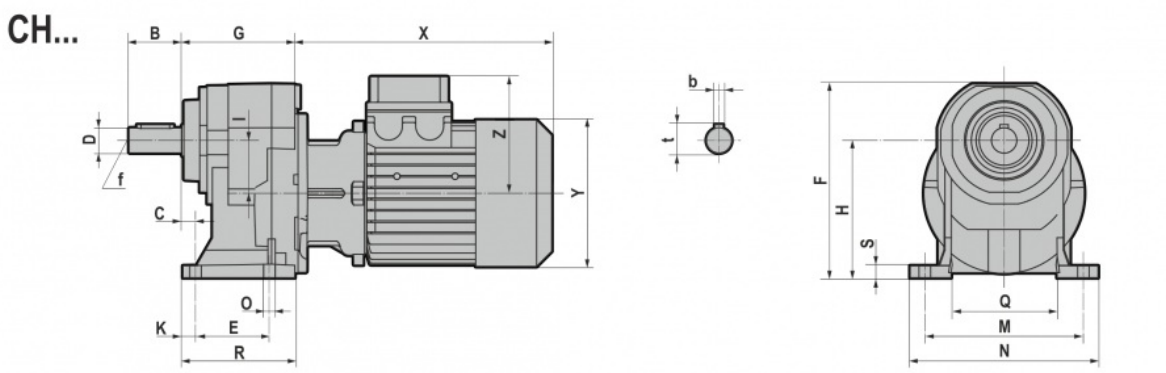
CH...
B
G
X
D
f
C
I
Z
Y
O
K
E
R
b
t
F
H
S
Q
M
N

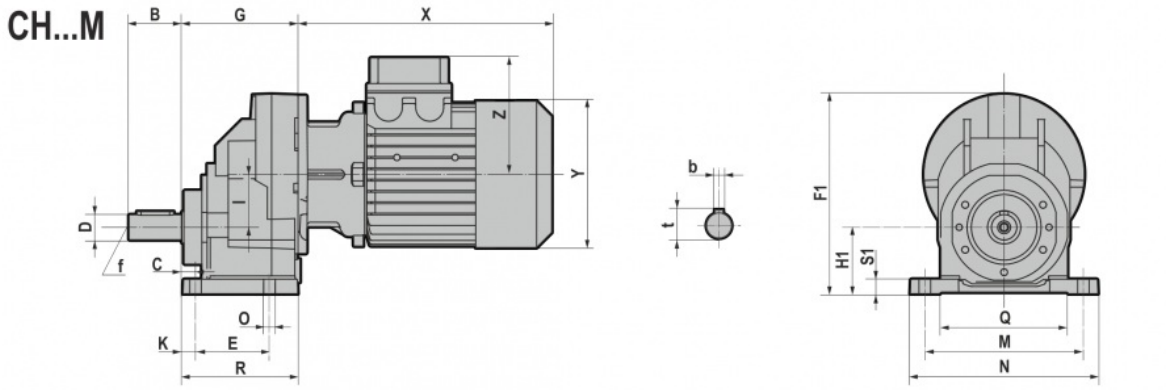
CH...M
B
G
X
D
f
C
I
Z
Y
O
K
E
R
b
t
F1
H1
S1
Q
M
N

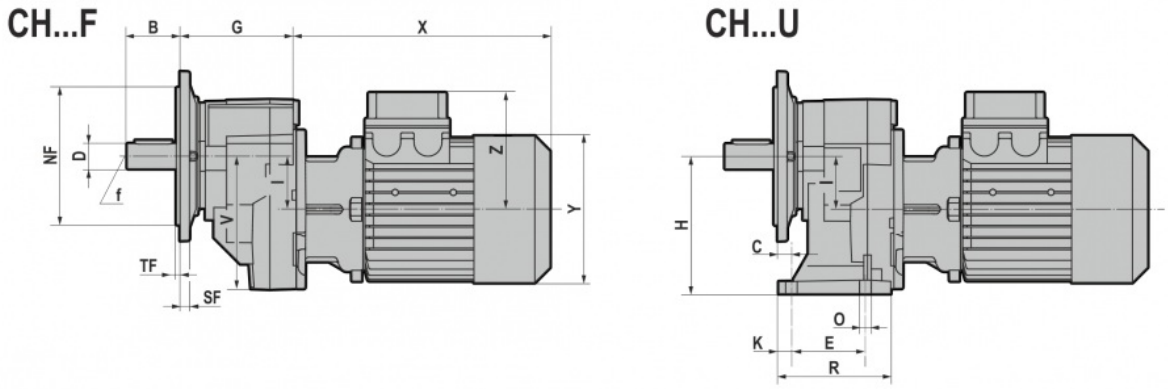
CH...F
B
G
X
NF
D
f
I
V
Z
Y
TF
SF
CH...U
H
C
I
O
K
E
R

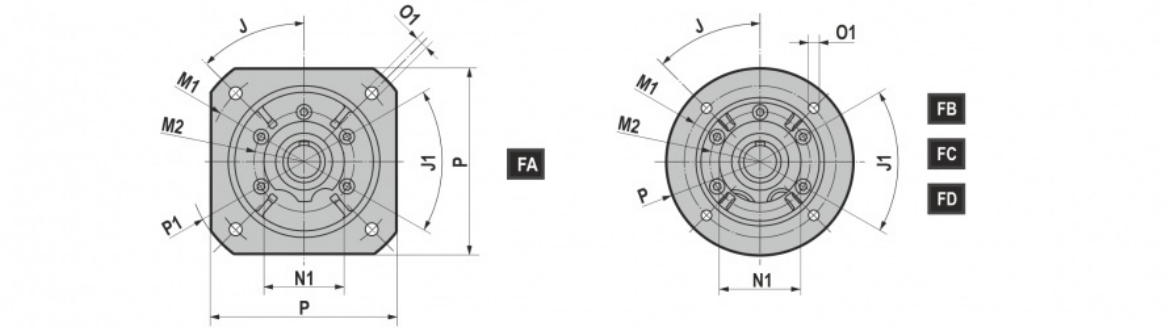
J
O1
M1
M2
P1
J1
P
N1
FA
FB
FC
FD

3.1 REDUCTORES/MOTORREDUCTORES

CH.../F/U/M	D	B	C	E	F	F1	G	H	H1	I	K	M	N	O	O2	Q	Q1	R	R1	S	S1	~V	b	t	f
CH041	19 j6	40	13	45	168,5	168	100	120	50	42	12	105	130 125 (041M)	9	M8x17 (n.5)	74	55	86,5	98	9,5	8	118	6	21,5	M6
CH051	24 j6	50	13	70	183,5	189	110	130	63	50	12	150	178	11	M8x17 (n.5)	100	121,5	106	109	11,5	14	126	8	27	M8
CH061	28 j6	60	16	70	231	216	125	165	80	60	14	165	195	11	M8x17 (n.5)	110	135,5	120	123	15	16	136	8	31	M10
CH081	38 k6	80	25	85	277	284	135	195	100	80	23	185	230 232 (081M)	14	M10x20 (n.7)	123	151	130	135	15	20	184	10	41	M12
CH101	48 k6	110	19	130	355	377	180	252	125	100	17	240	295	18	M10x20 (n.6)	162	185,5	173	178	16	22	251,5	14	51,5	M16
CH121	55 m6	110	25	150	422	426,5	210	300	160	115	22	280	340	18	M12x25 (n.7)	183	224	202	207	19	25	266,5	16	59	M20

		J	J1	M1	M2	NF f8	N1	O1	P	P1	SF	TF
CH041F/U CH051F/U	FA	45	45	Ø165	Ø85	130	70	11	160	Ø200	9	3,5
	FB			Ø130	Ø85	110		9	Ø160	/	9	3,5
	FC			Ø115	Ø85	95		9	Ø140	/	9	3
	FD			Ø100	Ø85	80		M8	Ø120	/	9	3
CH061F/U	FA	45	45	Ø215	Ø105	180	90	14	200	Ø250	12	4
	FB			Ø165	Ø105	130		11	Ø200	/	12	3,5
CH081F/U CH101F/U	FA	45	45	Ø265	Ø130	230	110	14	250	Ø300	15	4
	FB			Ø215	Ø130	180		14	Ø250	/	15	4
	FC			Ø165	Ø130	130		11	Ø200	/	15	3,5
CH121F/U	FA	45	45	Ø300	Ø165	250	130	18	300	Ø350	16	5
	FB			Ø265	Ø165	230		14	Ø300	/	16	4
	FC			Ø 215	Ø165	180		14	Ø250	/	16	4

T (IE1 - IE2)										
CH.../F/U/M		063	071	080	090S	090L	100	112	132S	132M/L
CH041 CH051 CH061	X	215	241	268	296	321	333	351	/	/
	Y	121	139	158	173	173	191	211	/	/
	Z	104	112	122	130	130	139	154	/	/
CH081	X	/	221	248	276	301	335	356	405	443
	Y	/	139	158	173	173	191	211	249	249
	Z	/	112	122	130	130	139	154	194	194
CH101 CH121	X	/	/	/	267	292	326	347	396	434
	Y	/	/	/	173	173	191	211	249	249
	Z	/	/	/	130	130	139	154	194	194

TB (IE1 - IE2)										
CH.../F/U/M		063	071	080	090S	090L	100	112	132S	132M/L
CH041 CH051 CH061	X	273	306.5	341	373	398	415	448	/	/
	Y	121	139	158	173	173	191	211	/	/
	Z	119	129	137	157	157	168	183	/	/
CH081	X	/	286.5	321	353	378	417	453	505	547
	Y	/	139	158	173	173	191	211	249	249
	Z	/	129	137	157	157	168	183	230	230
CH101 CH121	X	/	/	/	343	368	407	443	495	537
	Y	/	/	/	173	173	191	211	249	249
	Z	/	/	/	157	157	168	183	230	230

3.1.13 IH..1

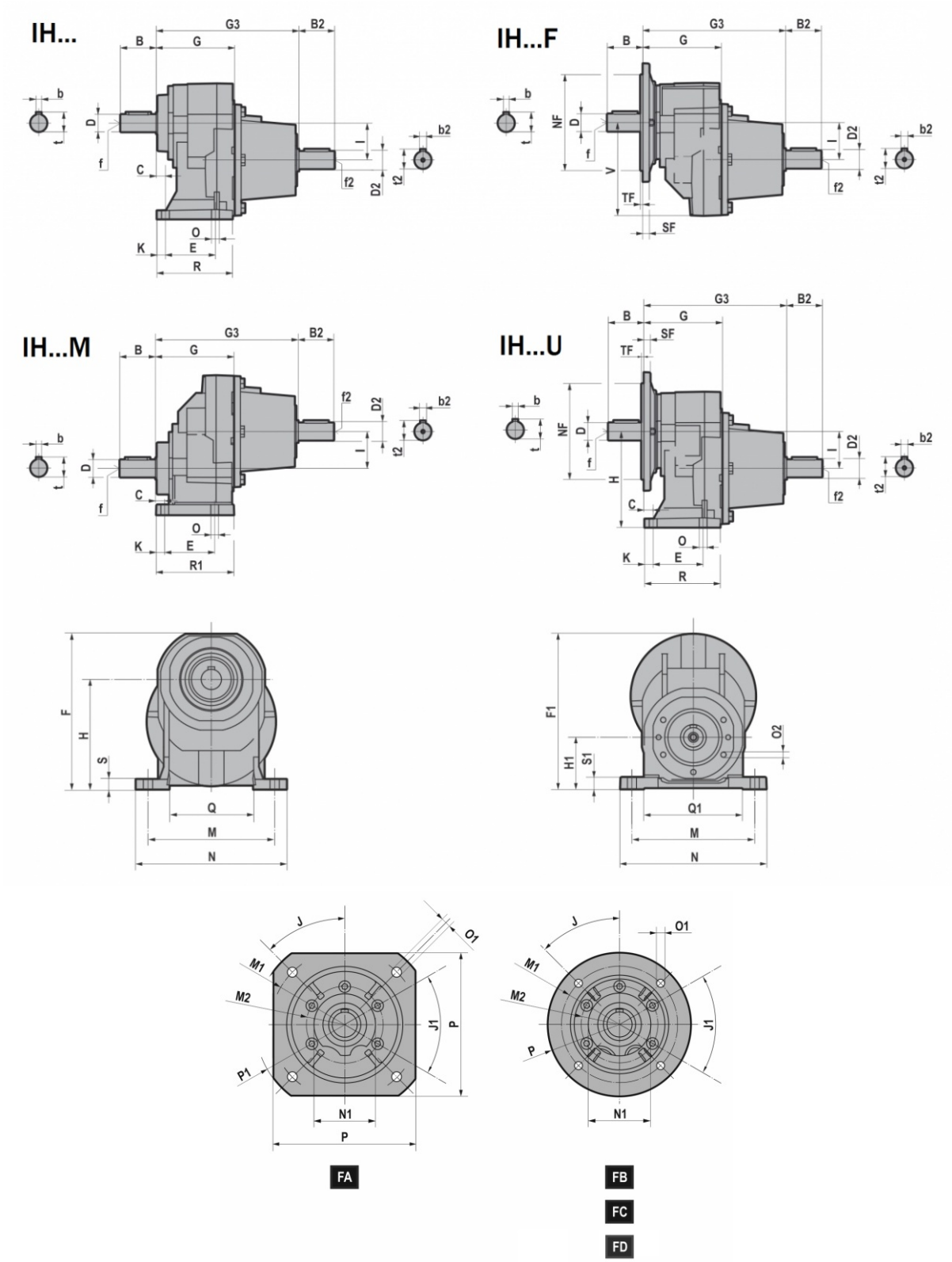
IH...
IH...F
IH...M
IH...U
G3
B2
B
G
b
t
D
f
C
O
K
E
R
R1
l
f2
D2
t2
b2
NF
V
TF
SF
H
F
S
Q
M
N
F1
H1
S1
O2
Q1
J
O1
M1
M2
P1
J1
P
N1
FA
FB
FC
FD

3.1 REDUCTORES/MOTORREDUCTORES

IH.../F/U/M	D	B	C	E	F	F1	G	H	H1	I	K	M	N	O	O2	Q	Q1	R	R1	S	S1	~V	b	t	f
IH041	19 j6	40	13	45	168,5	168	100	120	50	42	12	105	130 125 (041M)	9	M8x17 (n.5)	74	55	86,5	98	9,5	8	118	6	21,5	M6
IH051	24 j6	50	13	70	183,5	189	110	130	63	50	12	150	178	11	M8x17 (n.5)	100	121,5	106	109	11,5	14	126	8	27	M8
IH061	28 j6	60	16	70	231	216	125	165	80	60	14	165	195	11	M8x17 (n.5)	110	135,5	120	123	15	16	136	8	31	M10
IH081	38 k6	80	25	85	277	284	135	195	100	80	23	185	230 232 (081M)	14	M10x20 (n.7)	123	151	130	135	15	20	184	10	41	M12
IH101	48 k6	110	19	130	355	377	180	252	125	100	17	240	295	18	M10x20 (n.6)	162	185,5	173	178	16	22	251,5	14	51,5	M16
IH121	55 m6	110	25	150	422	426,5	210	300	160	115	22	280	340	18	M12x25 (n.7)	183	224	202	207	19	25	266,5	16	59	M20

		J	J1	M1	M2	NF f8	N1	O1	P	P1	SF	TF
IH041F/U IH051F/U	FA	45	45	Ø165	Ø85	130	70	11	160	Ø200	9	3,5
	FB			Ø130	Ø85	110		9	Ø160	/	9	3,5
	FC			Ø115	Ø85	95		9	Ø140	/	9	3
	FD			Ø100	Ø85	80		M8	Ø120	/	9	3
IH061F/U	FA	45	45	Ø215	Ø105	180	90	14	200	Ø250	12	4
	FB			Ø165	Ø105	130		11	Ø200	/	12	3,5
IH081F/U IH101F/U	FA	45	45	Ø265	Ø130	230	110	14	250	Ø300	15	4
	FB			Ø215	Ø130	180		14	Ø250	/	15	4
	FC			Ø165	Ø130	130		11	Ø200	/	15	3,5
IH121F/U	FA	45	45	Ø300	Ø165	250	130	18	300	Ø350	16	5
	FB			Ø265	Ø165	230		14	Ø300	/	16	4
	FC			Ø 215	Ø165	180		14	Ø250	/	16	4

	G3	B2	D2	b2	t2	f2
IH041	190	40	16 j6	5	18	M6
IH051	200	50	24 j6	8	27	M8
IH061	215	50	24 j6	8	27	M8
IH081	248	60	28 j6	8	31	M10
IH101	306,5	80	38 k6	10	41	M12
IH121	336,5	80	38 k6	10	41	M12

3.1.14 H..2/3

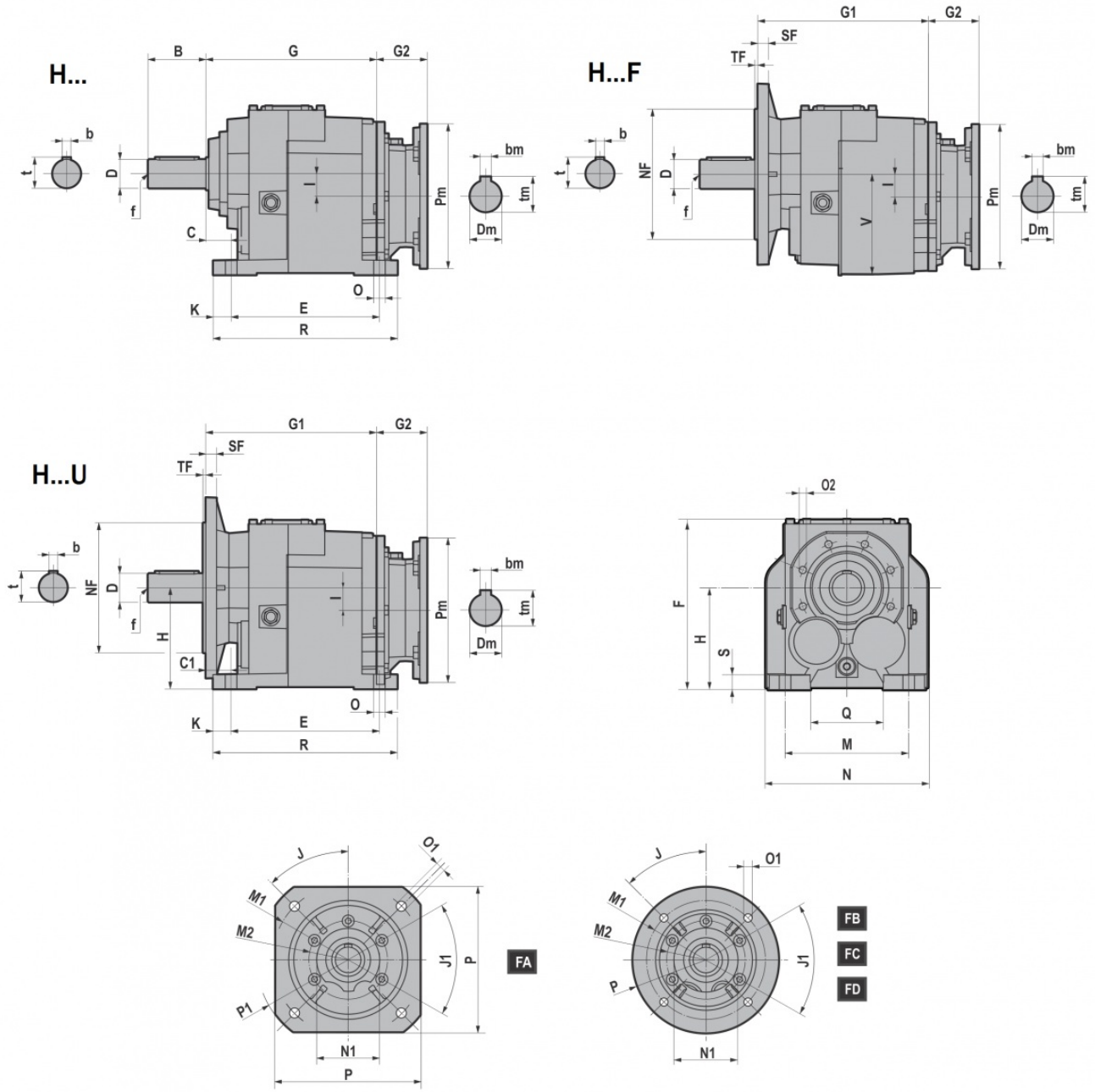

H.../F/U	D	B	b	t	f	C	C1	E	F	G	G1	H	I	K	M	N	O	O2	Q	R	S	-V
H032/H033	25 j6	50	8	28	M10	25	34	130	169	141	150	90	9,2	15	110	140	11	M8x17 (n.5)	60	160	15	92
H042/H043	30 j6	60	8	33	M10	30	30	165	189	152	152	115	18	15	135	170	14	M8x17 (n.5)	85	195	15	115
H052/H053	35 k6	70	10	38	M12	30	30	165	192	187	187	115	25,5	18	135	185	14	M8x17 (n.5)	80	201	18	116
H062/H063	40 k6	80	12	43	M16	35	35	205	234	236	236	140	31	25	170	220	16	M10x20 (n.6)	100	255	20	140
	35 k6	70	10	38	M12																	
H082/H083	50 k6	100	14	53,5	M16	40	40	260	292	272,5	272,5	180	31	27,5	215	280	18	M12x25 (n.7)	140	315	25	180
	40 k6	80	12	43	M16																	
H102/H103	60 m6	120	18	64	M20	40	40	310	364	316	316	225	35,5	27,5	250	330	22	M14x28 (n.7)	159	365	30	227
H122/H123	70 m6	140	20	74,5	M20	45	45	370	399	376,5	376,5	250	47,5	35	290	406	26	M14x30 (n.7)	185,5	440	35	253
H142/H143	90 m6	170	25	95	M20	50	50	410	490	430	430	315	45	40	340	450	26	M16x32 (n.7)	230	490	35	320

3.1 REDUCTORES/MOTORREDUCTORES

....F/U		J	J1	M1	M2	NF f8	N1	O1	P	P1	SF	TF
H032/H033 H042/H043	FA	45	45	Ø165	Ø85	130	70	11	160	Ø200	9	3,5
	FB			Ø130	Ø85	110		9	Ø160	/	9	3,5
	FC			Ø115	Ø85	95		9	Ø140	/	9	3
	FD			Ø100	Ø85	80		M8	Ø120	/	9	3
H052/H053	FA	45	45	Ø215	Ø105	180	90	14	200	Ø250	12	4
	FB			Ø165	Ø105	130		11	Ø200	/	12	3,5
H062/H063	FA	45	45	Ø265	Ø130	230	110	14	250	Ø300	15	4
	FB			Ø215	Ø130	180		14	Ø250	/	15	4
	FC			Ø165	Ø130	130		11	Ø200	/	15	3,5
H082/H083	FA	45	45	Ø300	Ø165	250	130	18	300	Ø350	16	5
	FB			Ø265	Ø165	230		14	Ø300	/	16	4
	FC			Ø215	Ø165	180		14	Ø250	/	16	4
H102/H103	FA	45	45	Ø350	Ø185	300	150	18	350	Ø400	18	5
	FB			Ø300	Ø185	250		18	Ø350	/	18	5
	FC			Ø265	Ø185	230		14	Ø300	/	18	4
H122/H123	FB	45	45	Ø350	Ø200	300	170	18	Ø400	/	18	5
H142/H143	FB	22,5	45	Ø400	Ø245	350	210	18	Ø450	/	25	5
	FC	45		Ø350	Ø245	300		18	Ø400	/	25	5

		G2 H.../F/U			
IEC	Pm x Dm	H032/H033 H042/H043 H052/H053	H062/H063 H082/H083	H102/H103 H122/H123	H142/H143
063	140x11	57,0	/	/	/
071	160x14	69,0	49,0	/	/
080	200x19	90,0	70,0	60,5	/
090	200x24	90,0	70,0	60,5	/
100-112	250x28	105,0	85,0	75,5	/
132	300x38	/	110,0	100,5	76,0
160	350x42	/	157,5	148,0	123,5
180	350x48	/	157,5	148,0	123,5
200	400x55	/	/	185,0	160,5
225	450x60	/	/	/	160,5

B5	Pm	Dm	bm	tm
063	140	11	4	12,8
071	160	14	5	16,3
080	200	19	6	21,8
090	200	24	8	27,3
100	250	28	8	31,3
112	250	28	8	31,3
132	300	38	10	41,3
160	350	42	12	45,3
180	350	48	14	51,8
200	400	55	16	59,3
225	450	60	18	64,4

3.1.15 CH..2/3

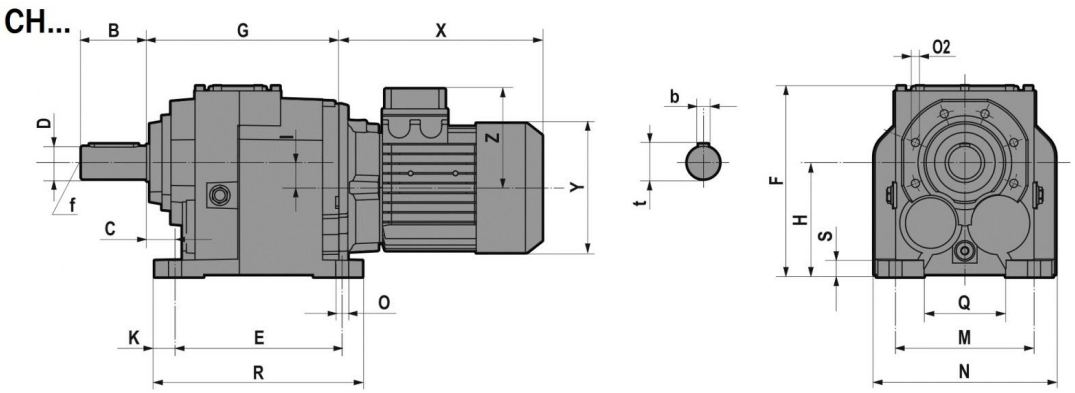

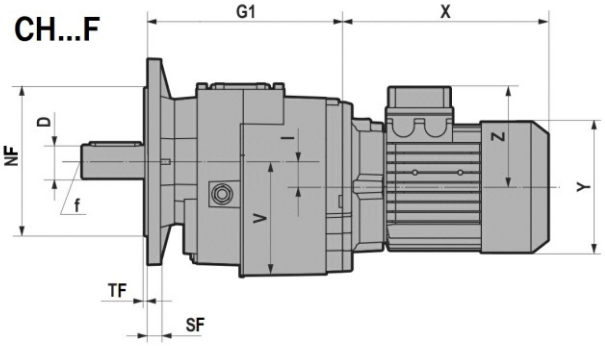

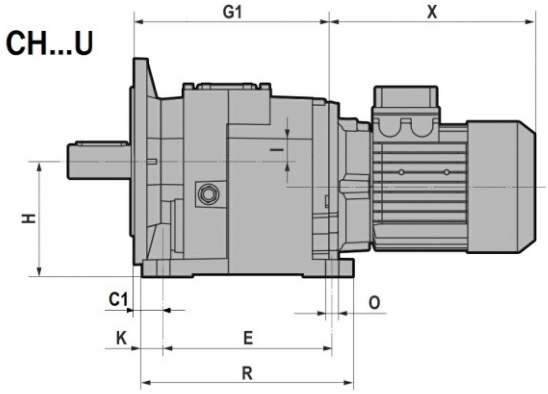

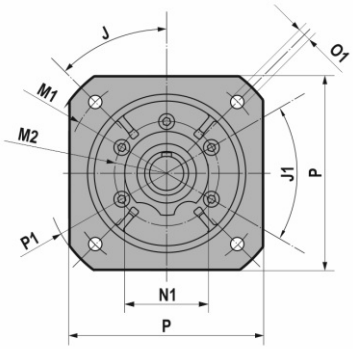

FA

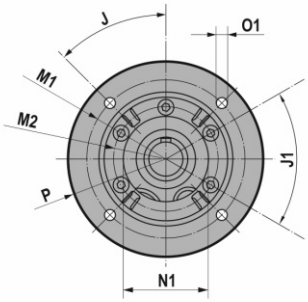

FB

FC

FD

3.1 REDUCTORES/MOTORREDUCTORES

CH.../F/U	D	B	b	t	f	C	C1	E	F	G	G1	H	I	K	M	N	O	O2	Q	R	S	-V
CH032/CH033	25 j6	50	8	28	M10	25	34	130	169	141	150	90	9,2	15	110	140	11	M8x17 (n.5)	60	160	15	92
CH042/CH043	30 j6	60	8	33	M10	30	30	165	189	152	152	115	18	15	135	170	14	M8x17 (n.5)	85	195	15	115
CH052/CH053	35 k6	70	10	38	M12	30	30	165	192	187	187	115	25,5	18	135	185	14	M8x17 (n.5)	80	201	18	116
CH062/CH063	40 k6	80	12	43	M16	35	35	205	234	236	236	140	31	25	170	220	16	M10x20 (n.6)	100	255	20	140
	35 k6	70	10	38	M12																	
CH082/CH083	50 k6	100	14	53,5	M16	40	40	260	292	272,5	272,5	180	31	27,5	215	280	18	M12x25 (n.7)	140	315	25	180
	40 k6	80	12	43	M16																	
CH102/CH103	60 m6	120	18	64	M20	40	40	310	364	316	316	225	35,5	27,5	250	330	22	M14x28 (n.7)	159	365	30	227
CH122/CH123	70 m6	140	20	74,5	M20	45	45	370	399	376,5	376,5	250	47,5	35	290	406	26	M14x30 (n.7)	185,5	440	35	253
CH142/CH143	90 m6	170	25	95	M20	50	50	410	490	430	430	315	45	40	340	450	26	M16x32 (n.7)	230	490	35	320

....F/U		J	J1	M1	M2	NF f8	N1	O1	P	P1	SF	TF
CH032/CH033 CH042/CH043	FA	45	45	Ø165	Ø85	130	70	11	160	Ø200	9	3,5
	FB			Ø130	Ø85	110		9	Ø160	/	9	3,5
	FC			Ø115	Ø85	95		9	Ø140	/	9	3
	FD			Ø100	Ø85	80		M8	Ø120	/	9	3
CH052/CH053	FA	45	45	Ø215	Ø105	180	90	14	200	Ø250	12	4
	FB			Ø165	Ø105	130		11	Ø200	/	12	3,5
CH062/CH063	FA	45	45	Ø265	Ø130	230	110	14	250	Ø300	15	4
	FB			Ø215	Ø130	180		14	Ø250	/	15	4
	FC			Ø165	Ø130	130		11	Ø200	/	15	3,5
CH082/CH083	FA	45	45	Ø300	Ø165	250	130	18	300	Ø350	16	5
	FB			Ø265	Ø165	230		14	Ø300	/	16	4
	FC			Ø215	Ø165	180		14	Ø250	/	16	4
CH102/CH103	FA	45	45	Ø350	Ø185	300	150	18	350	Ø400	18	5
	FB			Ø300	Ø185	250		18	Ø350	/	18	5
	FC			Ø265	Ø185	230		14	Ø300	/	18	4
CH122/CH123	FB	45	45	Ø350	Ø200	300	170	18	Ø400	/	18	5
CH142/CH143	FB	22,5	45	Ø400	Ø245	350	210	18	Ø450	/	25	5
	FC	45		Ø350	Ø245	300		18	Ø400	/	25	5

T (IE1 - IE2)										
CH.../F/U		063	071	080	090S	090L	100	112	132S	132M/L
CH032/CH033 CH042/CH043 CH052/CH053	X	215	241	268	296	321	333	351	/	/
	Y	121	139	158	173	173	191	211	/	/
	Z	104	112	122	130	130	139	154	/	/
CH062/CH063 CH082/CH083	X	/	221	248	276	301	335	356	405	443
	Y	/	139	158	173	173	191	211	249	249
	Z	/	112	122	130	130	139	154	194	194
CH102/CH103 CH122/CH123	X	/	/	/	267	292	326	347	396	434
	Y	/	/	/	173	173	191	211	249	249
	Z	/	/	/	130	130	139	154	194	194

TB (IE1 - IE2)										
CH.../F/U		063	071	080	090S	090L	100	112	132S	132M/L
CH032/CH033 CH042/CH043 CH052/CH053	X	273	306.5	341	373	398	415	448	/	/
	Y	121	139	158	173	173	191	211	/	/
	Z	119	129	137	157	157	168	183	/	/
CH062/CH063 CH082/CH083	X	/	286.5	321	353	378	417	453	505	547
	Y	/	139	158	173	173	191	211	249	249
	Z	/	129	137	157	157	168	183	230	230
CH102/CH103 CH122/CH123	X	/	/	/	343	368	407	443	495	537
	Y	/	/	/	173	173	191	211	249	249
	Z	/	/	/	157	157	168	183	230	230

3.1.16 IH..2/3

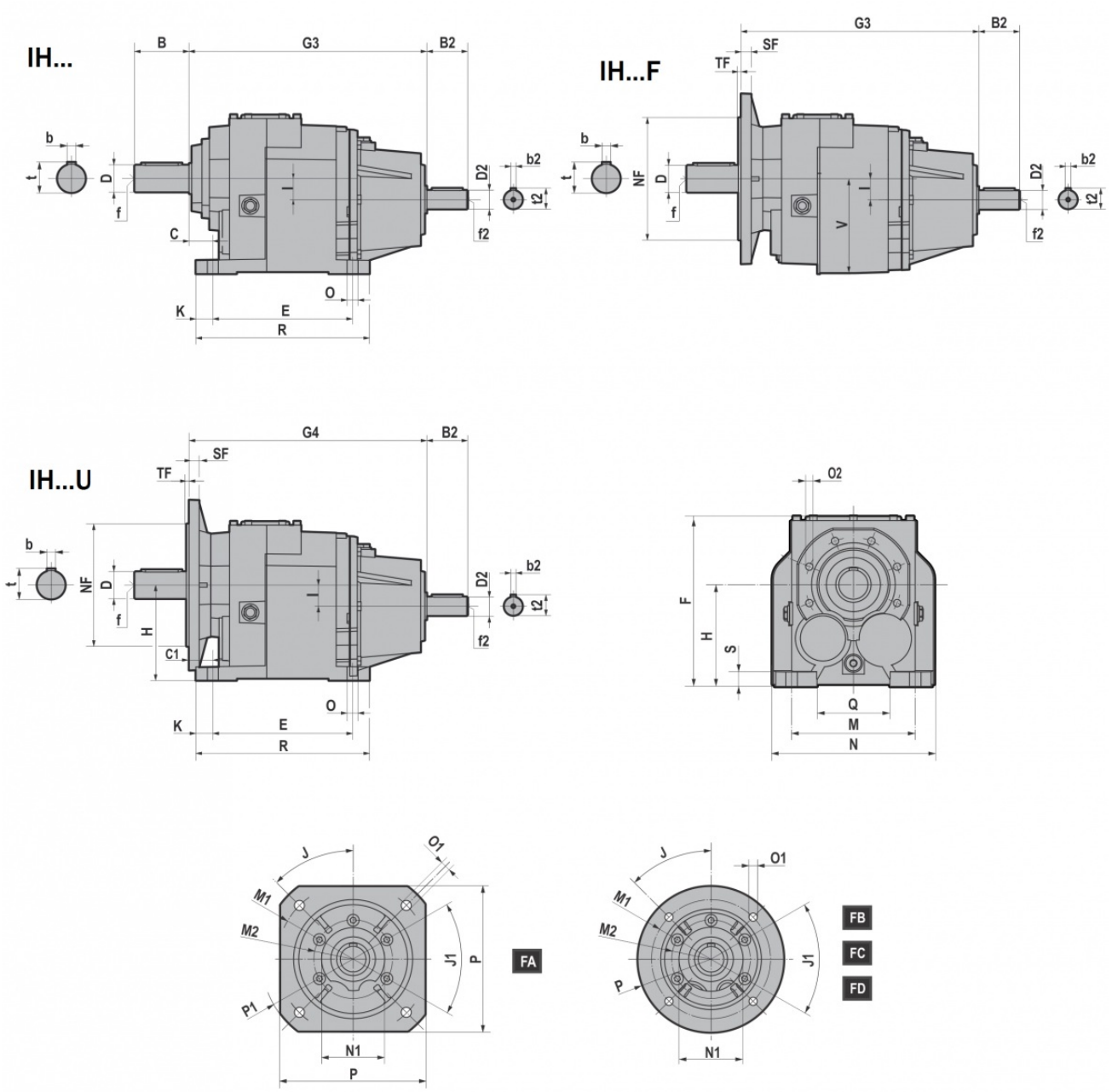

IH.../F/U	D	B	b	t	f	C	C1	E	F	G	G1	H	I	K	M	N	O	O2	Q	R	S	-V
IH032/IH033	25 j6	50	8	28	M10	25	34	130	169	141	150	90	9,2	15	110	140	11	M8x17 (n.5)	60	160	15	92
IH042/IH043	30 j6	60	8	33	M10	30	30	165	189	152	152	115	18	15	135	170	14	M8x17 (n.5)	85	195	15	115
IH052/IH053	35 k6	70	10	38	M12	30	30	165	192	187	187	115	25,5	18	135	185	14	M8x17 (n.5)	80	201	18	116
IH062/IH063	40 k6	80	12	43	M16	35	35	205	234	236	236	140	31	25	170	220	16	M10x20 (n.6)	100	255	20	140
	35 k6	70	10	38	M12																	
IH082/IH083	50 k6	100	14	53,5	M16	40	40	260	292	272,5	272,5	180	31	27,5	215	280	18	M12x25 (n.7)	140	315	25	180
	40 k6	80	12	43	M16																	
IH102/IH103	60 m6	120	18	64	M20	40	40	310	364	316	316	225	35,5	27,5	250	330	22	M14x28 (n.7)	159	365	30	227
IH122/IH123	70 m6	140	20	74,5	M20	45	45	370	399	376,5	376,5	250	47,5	35	290	406	26	M14x30 (n.7)	185,5	440	35	253
IH142/IH143	90 m6	170	25	95	M20	50	50	410	490	430	430	315	45	40	340	450	26	M16x32 (n.7)	230	490	35	320

3.1 REDUCTORES/MOTORREDUCTORES

....F/U		J	J1	M1	M2	NF f8	N1	O1	P	P1	SF	TF
IH032/IH033 IH042/IH043	FA	45	45	Ø165	Ø85	130	70	11	160	Ø200	9	3,5
	FB			Ø130	Ø85	110		9	Ø160	/	9	3,5
	FC			Ø115	Ø85	95		9	Ø140	/	9	3
	FD			Ø100	Ø85	80		M8	Ø120	/	9	3
IH052/IH053	FA	45	45	Ø215	Ø105	180	90	14	200	Ø250	12	4
	FB			Ø165	Ø105	130		11	Ø200	/	12	3,5
IH062/IH063	FA	45	45	Ø265	Ø130	230	110	14	250	Ø300	15	4
	FB			Ø215	Ø130	180		14	Ø250	/	15	4
	FC			Ø165	Ø130	130		11	Ø200	/	15	3,5
IH082/IH083	FA	45	45	Ø300	Ø165	250	130	18	300	Ø350	16	5
	FB			Ø265	Ø165	230		14	Ø300	/	16	4
	FC			Ø215	Ø165	180		14	Ø250	/	16	4
IH102/IH103	FA	45	45	Ø350	Ø185	300	150	18	350	Ø400	18	5
	FB			Ø300	Ø185	250		18	Ø350	/	18	5
	FC			Ø265	Ø185	230		14	Ø300	/	18	4
IH122/IH123	FB	45	45	Ø350	Ø200	300	170	18	Ø400	/	18	5
IH142/IH143	FB	22,5	45	Ø400	Ø245	350	210	18	Ø450	/	25	5
	FC	45		Ø350	Ø245	300		18	Ø400	/	25	5

IH.../F/U	G3	G4	B2	D2	b2	t2	f2
IH032/IH033	231	240	50	24 j6	8	27	M8
IH042/IH043	242	242	50	24 j6	8	27	M8
IH052/IH053	277	277	50	24 j6	8	27	M8
IH062/IH063	349	349	60	28 j6	8	31	M10
IH082/IH083	385,5	385,5	60	28 j6	8	31	M10
IH102/IH103	442,5	442,5	80	38 k6	10	41	M12
IH122/IH123	503	503	80	38 k6	10	41	M12
IH142/IH143	570	570	110	42 k6	12	45	M16

3.2 MOTORES ELÉCTRICOS

3.2.1 Motores eléctricos

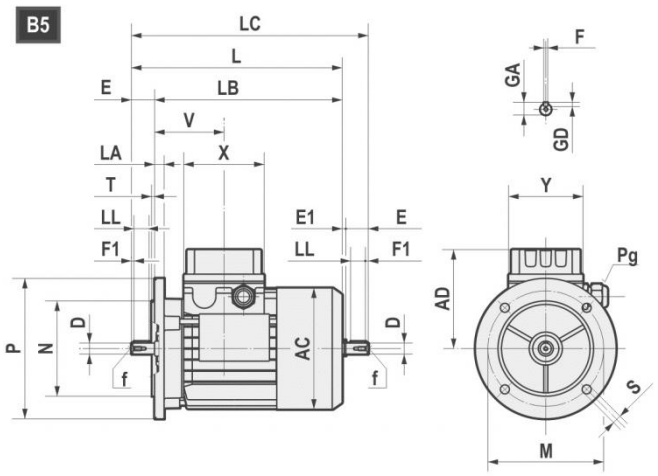

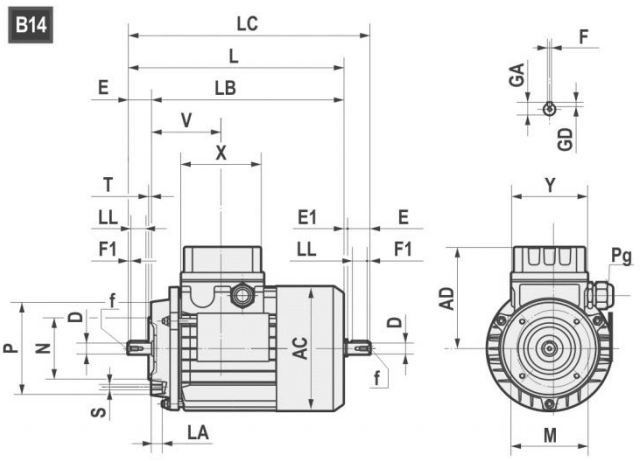

	AC	AD	L	LB	LC	X	Y	V	D	E	E1	f	F1	GA	F	GD
063	121	104	211	188	235,5	80	74	69	11 j6	23	1,5	M4x10	2,5	12,5	4	4
071	139	112	238,5	208,5	271	80	74	74,5	14 j6	30	2,5	M5x12.5	3	16	5	5
080	158	122	272,5 *(296)	232,5 *(256)	314 *(337)	80	74	78	19 j6	40	1,5	M6x16	5	21,5	6	6
90S	173	146	298 *(331)	248 *(281)	349,5 *(381)	98	98	89,5	24 j6	50	1,5	M8x19	5	27	8	7
90L	173	146	323 *(356)	273 *(306)	374,5 *(408)	98	98	89,5	24 j6	50	1,5	M8x19	5	27	8	7
100	191	155	368	308	431,5	98	98	97,5	28 j6	60	3,5	M10x22	7,5	31	8	7
112	211	170	382,5 *(408)	322,5 *(348)	447 *(472)	98	98	100	28 j6	60	3,5	M10x22	7,5	31	8	7
132S	249	195	452	372	536,5	118	118	115,5	38 k6	80	4	M12x28	10	41	10	8
132L	249	195	490	410	574,5	118	118	115,5	38 k6	80	4	M12x28	10	41	10	8
160S	249	195	520	410	/	118	118	115,5	42k6	100	/	M16x36	10	45	12	8

*TP80B4,TP90S4, TP90L4, TP90S6, TP112M4, TP112M6

B5	M	N	P	LA	S	T
063	115	95	140	10	9	3
071	130	110	160	10	9,5	3,5
080	165	130	200	12	11	3,5
090	165	130	200	12	11	3,5
100	215	180	250	15	14	4
112	215	180	250	14,5	14	4
132	265	230	300	20	14	3,5
160	300	250	350	13	18,5	3,5

B14	M	N	P	LA	S	T
063	75	60	90	10	M5	2,5
071	85	70	105	10,5	M6	2,5
080	100	80	120	10,5	M6	3
090	115	95	140	11,5	M8	3
100	130	110	160	15	M8	3,5
112	130	110	160	11,5	M8	3,5
132	165	130	200	20,5	M10	3,5
160	215	180	250	-	M12	4

3.2 MOTORES ELÉCTRICOS

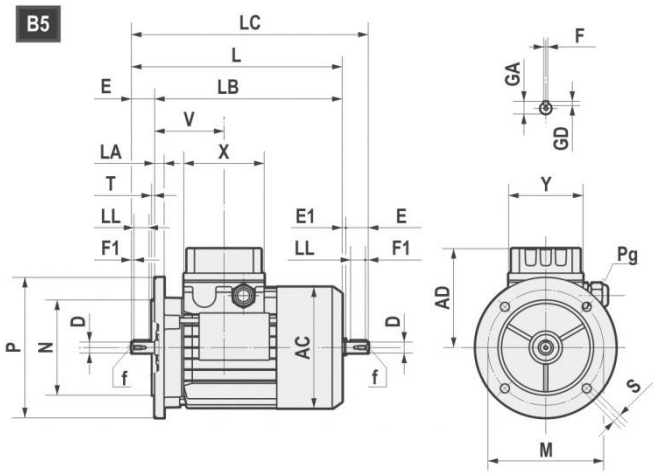

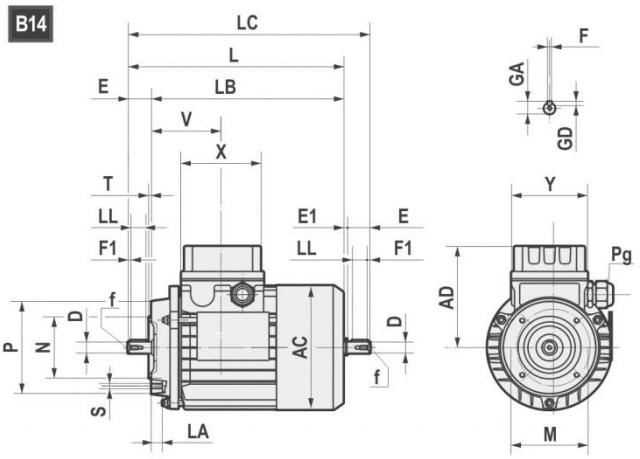

		AC	AD	L	LB	X	D	E	f	GA	F	GD	LL	Pg	
160M	2-4-6	314	251	600	490	158	42	110	M16	45	12	8	90	2-M40x1,5	1-M16x1,5
160L	2-4-6	314	251	645	535	158	42	110	M16	45	12	8	90	2-M40x1,5	1-M16x1,5
180M	2-4	355	267	680	570	158	48	110	M16	51,5	14	9	100	2-M40x1,5	1-M16x1,5
180L	4-6	355	267	720	610	158	48	110	M16	51,5	14	9	100	2-M40x1,5	1-M16x1,5
200L	2-4-6	397	300	785	675	187	55	110	M20	59	16	10	100	2-M50x1,5	1-M16x1,5
225S	4	446	325	820	680	187	60	140	M20	64	18	11	125	2-M50x1,5	1-M16x1,5
225M	2	446	325	815	705	187	55	110	M20	59	16	10	100	2-M50x1,5	1-M16x1,5
225M	4-6	446	325	845	705	187	60	140	M20	64	18	11	125	2-M50x1,5	1-M16x1,5
250M	2-4-6	485	360	910	770	238	60	140	M20	64	18	11	125	2-M63x1,5	1-M16x1,5
250M	2-4-6	485	360	910	770	238	65	140	M20	69	18	11	125	2-M63x1,5	1-M16x1,5
280S	2-4-6	547	390	970	830	238	65	140	M20	69	18	11	125	2-M63x1,5	1-M16x1,5
280S	2-4-6	547	390	970	830	238	75	140	M20	79,5	20	12	125	2-M63x1,5	1-M16x1,5
280M	2-4-6	547	390	1025	885	238	65	140	M20	69	18	11	125	2-M63x1,5	1-M16x1,5
280M	2-4-6	547	390	1025	885	238	75	140	M20	79,5	20	12	125	2-M63x1,5	1-M16x1,5

B5	M	N	P	LA	S	T
160	300	250	350	13	19	5
180	300	250	350	15	19	5
200	350	300	400	17	19	5
225	400	350	450	20	19	5
250	500	450	550	22	19	5
280	500	450	550	22	19	5

3.2.2 Motores de eficiencia estándar (TS), alta (TH) y premium (TP)

Los motores trifásicos de polaridad simple Motovario están disponibles en tres versiones diferentes (IE1-IE2-IE3) de acuerdo con la norma IEC 60034-30-1 (ver tabla). El rendimiento se calcula según el método establecido por la norma IEC 60034-2-1.

1. IE1: Serie TS de eficiencia estándar.
2. IE2: Serie TH de alta eficiencia.
3. IE3: Serie TP de eficiencia premium.

Tabla disponibilidad comercial Motovario

		NIVELES DE EFICIENCIA		
POTENCIAS NOMINALES [kW]	POLOS	IE1	IE2	IE3
0,09 ≤ Pn < 0,75	2 - 4 - 6	TS-TBS	-	-
0,75 ≤ Pn ≤ 11	2 - 4	TBS	-	-
0,75 ≤ Pn ≤ 5,5	6	TBS	TH-TBH	TP-TBP
0,75 ≤ Pn ≤ 9,2	2 - 4	-	TH-TBH	-
0,75 ≤ Pn ≤ 7,5	2 - 4	-	-	TP-TBP
11 ≤ Pn ≤ 37	2	TBS (*)	-	TP
11 ≤ Pn ≤ 55	4	TBS (*)	-	-
11 ≤ Pn ≤ 90	4	-	-	TP
7,5 ≤ Pn ≤ 22	6	TBS (*)	-	TP

(*) Series disponibles bajo pedido.

3.2.3 Potencia nominal - [kW]

	63A	63B	63C	71A	71B	71C	80A			80B		
Polos	TS	TS	TS	TS	TS	TS	TS	TH	TP	TS	TH	TP
2	0,18	0,25	0,37	0,37	0,55	-	-	0,75	0,75	-	1,1	1,1
4	0,12	0,18	0,22	0,25	0,37	0,55	0,55	-	-	-	0,75	0,75
6	0,09	0,12	0,15	0,18	0,25	0,37	0,37	-	-	0,55	-	-

	90S		90L		100LR	100L	100LA		112MR	112MS	112MA	112M
Polos	TH	TP	TH	TP	TP	TP	TH	TP	TP	TP	TH	TP
2	1,5	1,5	2,2	2,2	-	3	3	-	-	-	4	4
4	1,1	1,1	1,5	1,5	-	-	2,2	2,2	2,2	3	4	4
6	-	0,75	0,75	-	1,1	1,5	1,1	-	-	-	2,2	2,2

	112MR	112MS	132S	132SA	132MS	132SB	132M	132MA		132MB	
Polos	TP	TP	TP	TH	TP	TH	TP	TH	TP	TH	TP
2	-	-	5,5	5,5	-	7,5	7,5	9,2	-	-	-
4	2,2	3	-	5,5	5,5	-	7,5	7,5	-	-	-
6	-	-	3	3	-	-	-	4	4	5,5	5,5

	160M	160MA	160MB	160L	160LA	180M	180L
Polos	TP	TP	TP	TP	TP	TP	TP
2	-	11	15	18,5	-	22	-
4	-	11	-	-	15	18,5	22
6	7,5	-	-	11	-	-	15

	200L	200LA	200LB	225S	225M	250M	280S	280M
Polos	TP	TP	TP	TP	TP	TP	TP	TP
2	-	30	37	-	-	-	-	-
4	30	-	-	37	45	55	75	90
6	-	18,5	22	-	-	-	-	-

3.3 PESO

En las tablas ilustran las cantidades de lubricante de los reductores.

* H-PH	063	071	080-090	100-112	132	160-180	200	225	
A31	1,9	2,0	2,2	/	/	/	/	/	~ kg
A32	4,2	4,3	4,6	/	/	/	/	/	
A33	4,0	4,1	5,2	/	/	/	/	/	
A41	3,1	3,2	3,5	/	/	/	/	/	
A42	5,2	5,3	5,5	/	/	/	/	/	
A43	5,8	5,9	6,1	/	/	/	/	/	
A51	4,2	4,3	4,5	/	/	/	/	/	
A52	/	/	9,5	13,0	/	/	/	/	
A53	9,9	10,0	10,2	/	/	/	/	/	
A61	/	/	6,6	7,0	/	/	/	/	
A62	/	/	11,3	14,8	/	/	/	/	
A63	12,5	12,6	13,2	/	/	/	/	/	
032-033	8,4	8,8	9,4	13,7	/	/	/	/	
042-043	10,9	11,3	11,9	16,2	/	/	/	/	
041	/	4,8	5,4	/	/	/	/	/	
052-053	16,0	16,4	17,0	21,3	/	/	/	/	
051	/	6,7	7,3	11,6	/	/	/	/	
062-063	/	27,0	29,1	31,2	33,9	/	/	/	
061	/	/	9,3	13,6	/	/	/	/	
082-083	/	/	49,1	51,2	53,2	60,5	/	/	
081	/	/	19,3	21,3	23,9	/	/	/	
102-103	/	/	77,6	79,9	82,7	88,7	/	/	
101	/	/	/	32,7	35,5	41,5	/	/	
121	/	/	/	/	36,8	42,8	57,8	/	
122-123	/	/	/	109,5	112,3	118,3	133,3	/	
142-143	/	/	/	/	177,0	184,9	199,1	200,9	

IH	~ kg
A32	4,3
A33	5,0
A41	3,3
A42	5,2
A43	5,8
A51	4,2
A52	9,4
A53	9,9
A61	6,5
A62	11,2
A63	12,9
032-033	11,5
042-043	14,0
041	7,5
052-053	19,1
051	9,4
062-063	33,1
061	11,4
082-083	53,1
081	23,2
102-103	87,5
101	40,3
121	41,6
122-123	117,1
142-143	192,1

3.3 PESO

*Peso sin motor

	TS									
CH	063	071	080	090S	090L	100	112	132S	132M	
A32	6,9	8,7	12,7	/	/	/	/	/	/	~ kg
A33	7,6	9,5	13,5	/	/	/	/	/	/	
A41	5,9	7,8	11,8	/	/	/	/	/	/	
A42	7,8	9,7	13,7	15,6	18,1	/	/	/	/	
A43	8,4	10,3	14,3	16,2	18,7	/	/	/	/	
A51	6,2	8,1	12,1	14,0	16,5	/	/	/	/	
A52	/	/	17,2	19,1	21,6	26,2	36,5	/	/	
A53	12,0	13,9	17,9	19,8	22,3	/	/	/	/	
A61	/	/	14,3	16,2	18,7	23,3	33,6	/	/	
A62	/	/	19,2	21,1	23,6	28,2	38,5	/	/	
A63	14,6	16,5	20,5	22,4	24,9	/	/	/	/	
032-033	11,9	12,8	17,5	21,4	23,4	28,9	40,4	/	/	
042-043	14,4	15,3	20,0	23,9	25,9	31,4	42,9	/	/	
041	/	8,8	13,5	17,4	19,4	/	/	/	/	
052-053	19,5	20,4	25,1	29,0	31,0	36,5	48,0	/	/	
051	/	10,7	15,4	19,3	21,3	26,8	38,3	/	/	
062-063	/	32,7	37,8	40,2	41,7	46,8	58,2	72,2	83,8	
061	/	/	17,4	21,3	23,3	28,8	40,3	/	/	
082-083	/	/	59,7	62,1	63,6	68,7	80,1	94,1	105,7	
081	/	/	27,1	29,5	31	36,1	47,5	61,5	73,1	
102-103	/	/	/	93,8	94,8	100,8	110,8	125,8	134,8	
101	/	/	/	/	/	49,6	59,6	74,6	83,6	
121	/	/	/	/	/	/	/	77	86	
122-123	/	/	/	/	/	134,5	144,5	159,5	168,5	

	TH							
CH	080	090S	090L	100	112	132S	132M	
A32	14,4	/	/	/	/	/	/	~ kg
A33	15,2	/	/	/	/	/	/	
A41	13,5	/	/	/	/	/	/	
A42	15,4	17,9	20	/	/	/	/	
A43	16,0	18,5	20,6	/	/	/	/	
A51	13,8	16,3	18,4	/	/	/	/	
A52	18,9	21,5	23,6	28,5	39,6	/	/	
A53	19,6	22,1	24,3	/	/	/	/	
A61	16,0	18,6	20,7	25,6	36,7	/	/	
A62	20,9	23,4	25,6	30,5	41,6	/	/	
A63	22,1	24,7	26,8	/	/	/	/	
032-033	19,2	23,7	25,3	31,2	43,5	/	/	
042-043	21,7	26,3	27,9	33,8	46	/	/	
041	15,2	19,7	21,3	/	/	/	/	
052-053	26,8	31,4	33	38,9	51,1	/	/	
051	17,1	21,6	23,2	29,1	41,4	/	/	
062-063	39,5	42,5	43,7	49,1	61,3	77,5	90,6	
061	19,1	23,6	25,2	31,1	43,4	/	/	
082-083	61,4	64,4	65,6	71	83,2	99,4	112,5	
081	28,8	31,8	33	38,4	50,6	66,8	79,9	
102-103	/	96,1	96,8	103,1	113,9	131,1	141,6	
101	/	/	/	51,9	62,7	79,9	90,4	
121	/	/	/	/	/	82,3	92,8	
122-123	/	/	/	136,8	147,6	164,8	175,3	

	TBS									
CH	063	071	080	090S	090L	100	112	132S	132M	
A32	8,2	10,6	15,8	/	/	/	/	/	/	~ kg
A33	8,9	11,4	16,6	/	/	/	/	/	/	
A41	7,2	9,7	14,9	/	/	/	/	/	/	
A42	9,1	11,6	16,8	20,5	23,0	/	/	/	/	
A43	9,7	12,2	17,4	21,1	23,6	/	/	/	/	
A51	7,5	10	15,2	18,9	21,4	/	/	/	/	
A52	/	/	20,3	24,3	26,5	31,1	44,8	/	/	
A53	13,3	15,8	21	24,7	27,2	/	/	/	/	
A61	/	/	17,4	21,1	23,6	28,2	41,9	/	/	
A62	/	/	22,3	26	28,5	33,1	46,8	/	/	
A63	15,9	18,4	23,6	27,3	29,8	/	/	/	/	
032-033	13,4	15	21	26,9	28,9	34,4	50,1	/	/	
042-043	15,9	17,5	23,5	29,4	31,4	36,9	52,6	/	/	
041	/	11	17	22,9	24,9	/	/	/	/	
052-053	21,0	22,6	28,6	34,5	36,5	42	57,7	/	/	
051	/	12,9	18,9	24,8	26,8	32,3	48	/	/	
062-063	/	34,9	41,3	45,7	47,2	52,3	67,9	82,5	98,5	
061	/	/	20,9	26,8	28,8	34,3	50	/	/	
082-083	/	/	63,2	67,6	69,1	74,2	89,8	104,4	120,4	
081	/	/	30,6	35	36,5	41,6	57,2	71,8	87,8	
102-103	/	/	/	99,4	100,4	106,4	120,6	136,2	149,6	
101	/	/	/	/	/	55	69,3	85	98,3	
121	/	/	/	/	/	/	/	87,3	100,7	
122-123	/	/	/	/	/	140	154,2	169,8	183,2	

	TBH							
CH	080	090S	090L	100	112	132S	132M	
A32	17,5	/	/	/	/	/	/	~ kg
A33	18,3	/	/	/	/	/	/	
A41	16,6	/	/	/	/	/	/	
A42	18,5	22,8	25,0	/	/	/	/	
A43	19,1	23,4	25,6	/	/	/	/	
A51	16,9	21,2	23,4	/	/	/	/	
A52	22	26,6	28,5	34,8	47,9	/	/	
A53	22,7	27	29,2	/	/	/	/	
A61	19,1	23,4	25,6	31,9	45	/	/	
A62	24	28,3	30,5	36,8	49,9	/	/	
A63	25,3	29,6	31,8	/	/	/	/	
032-033	22,7	29,2	30,9	38,1	53,2	/	/	
042-043	25,2	31,7	33,4	40,6	55,7	/	/	
041	18,6	25,2	26,9	/	/	/	/	
052-053	30,3	36,9	38,6	45,8	60,9	/	/	
051	20,6	27,1	28,8	36	51,1	/	/	
062-063	43	48	49,2	56	71	87,8	105	
061	22,6	29,1	30,8	38	53,1	/	/	
082-083	64,9	69,9	71,1	77,9	92,9	109,7	126,9	
081	32,3	37,3	38,5	45,3	60,3	77,1	94,3	
102-103	/	101,7	102,4	110,1	123,7	141,5	156,1	
101	/	/	/	58,7	72,4	90,3	104,8	
121	/	/	/	/	/	92,6	107,2	
122-123	/	/	/	143,7	157,3	175,1	189,7	

3.4 EXTREMIDAD DEL EJE

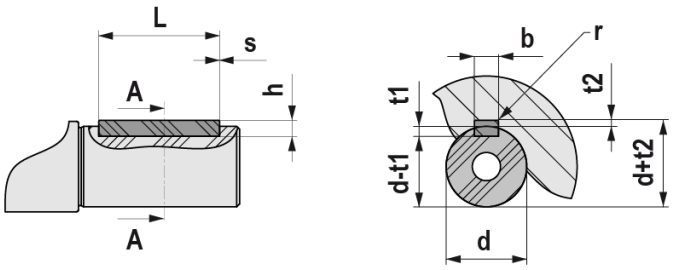

UNI 6604 - DIN 6885															
d			b x h			Tol. b / h	L		s min / max	b	t1	t2	Tol. t1 / t2	r max
	6	8	2	×	2	h9 / h9	6	20	0,16 0,25	2	1,2	1	0,1 0	0,08 0,16
>	8	10	3	×	3		6	36		3	1,8	1,4		
>	10	12	4	×	4		8	45		4	2,5	1,8		
>	12	17	5	×	5		10	56	0,25 0,4	5	3	2,3		0,16 0,25
>	17	22	6	×	6		14	70		6	3	2,8		
>	22	30	8	×	7	h9 / h11	18	90		8	4	3,3	0,2 0	
>	30	38	10	×	8		22	110	0,4 0,6	10	5	3,3		0,25 0,4
>	38	44	12	×	8		28	140		12	5	3,3		
>	44	50	14	×	9		36	160		14	5,5	3,8		
>	50	58	16	×	10		45	180		16	6	4,3		
>	58	65	18	×	11		50	200		18	7	4,4		
>	65	75	20	×	12		56	110	0,6 0,8	20	7,5	4,9		0,4 0,6
>	75	85	22	×	14		63	140		22	9	5,4		
>	85	95	25	×	14		70	160		25	9	5,4		
>	95	110	28	×	16		80	180		28	10	6,4		
>	110	130	32	×	18		90	200		32	11	7,4		
>	130	150	36	×	20		100	160	1 1,2	36	12	8,4	0,3 0	0,7 1
>	150	170	40	×	22		110	180		40	13	9,4		
>	170	200	45	×	25		125	200		45	14	10,4		

4.1 DISPOSITIVO ANTIRRETORNO

El reductor puede suministrarse con un dispositivo antirretorno en el eje veloz. El antirretorno permite la rotación de los ejes en un solo sentido, según el tamaño está disponible en la brida PAM o en el motor, sin incremento de dimensiones. Es muy importante especificar en el pedido el sentido de rotación requerido. El dispositivo antirretorno no está disponible para el montaje V1/V5 posición con motor tamaño IEC 100...225.

SENTIDO DE ROTACIÓN LIBRE

H... 1 - **H...** 1F - **H...** 1U - **H...** M - **H...** 3 - **H...** 3F - **H...** 3U

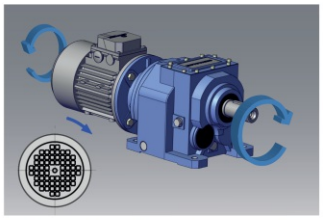

SENTIDO **HORARIO** REFERIDO AL EJE VELOZ

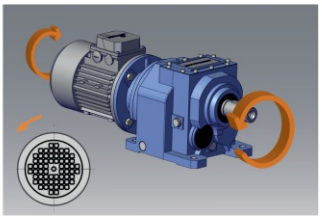

SENTIDO **ANTIHORARIO** REFERIDO AL EJE VELOZ

H... 2 - **H...** 2F - **H...** 2U

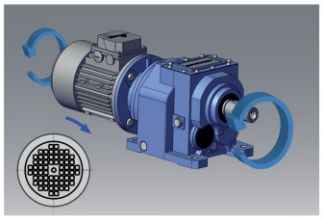

SENTIDO **HORARIO** REFERIDO AL EJE VELOZ

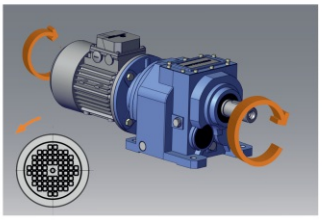

SENTIDO **ANTIHORARIO** REFERIDO AL EJE VELOZ

	063	071	080	090	100-112	132	160	180	200	225
	140x11	160x14	200x19	200x24	250x28	300x38	350x42	350x48	400x55	450x60
H032		B5	B5	B5	B5					
H033	B5	B5	B5	B5						
H041		B5	B5	B5						
H042		B5	B5	B5	B5					
H043	B5	B5	B5	B5						
H051		B5	B5	B5	B5					
H052		B5	B5	B5	B5					
H053	B5	B5	B5	B5						
H061			B5	B5	B5					
H062			B5	B5	B5	B5				
H063		B5	B5	B5	B5					
H081			B5	B5	B5	B5				
H082			B5	B5	B5	B5	B5			
H083			B5	B5	B5	B5				
H101					B5	B5	B5	B5		
H102					B5	B5	B5	B5		
H103				B5	B5	B5	B5			
H121						B5	B5	B5	B5	
H122						B5	B5	B5	B5	
H123					B5	B5	B5	B5	B5	
H142							B5	B5	B5	B5
H143						B5	B5	B5	B5	

4.2 RETENES REFORZADOS

Los retenes reforzados de efectúan según el tamaño con dos retenes o mediante retén estándar con anillo VRM. La diferencia entre las dos soluciones se aclara en las ilustraciones arriba.
Los reductores coaxiales del tamaño 060 al 140 (sin contar los de 1 tren) en posición V1/V5 montan ya 2 retenes como estándar.
Bajo pedido el reductor puede suministrarse con retenes de fluoroelastómero FPM (FKM).

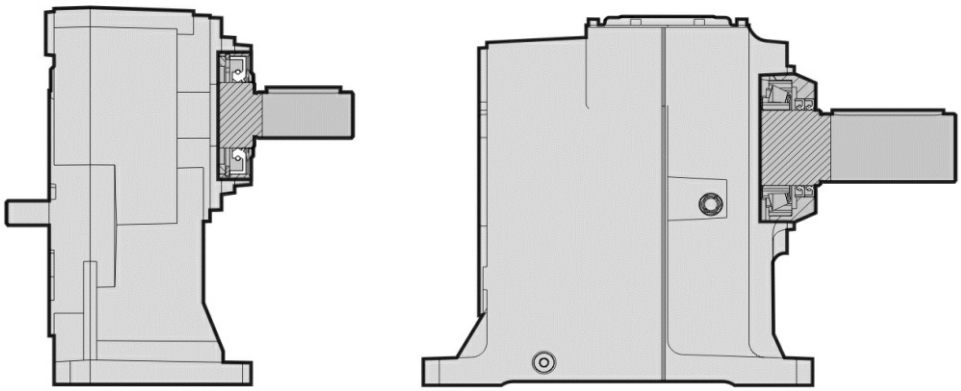

	Anillo doble	Anillo VRM
H041		x
H051		x
H061		x
H081		x
H101		x
H121		x
H032/3		x
H042/3		x
H052/3		x
H062/3	x	
H082/3	x	
H102/3	x	
H122/3	x	
H142/3	x	

5.1 H/HA MOTORREDUCTORES (50Hz)

0.09 kW

n2 [rpm]	M2 [Nm]	fs	i	Reductor	Motor	Fr2 [N]
136.5	6	3.9	6.30	HA31	63A6	972
109.2	8	3.0	7.88	HA31	63A6	1047
109.2	8	3.4	7.88	HA41	63A6	1058
79.4	11	1.4	10.83	HA31	63A6	1100
79.4	11	2.0	10.83	HA41	63A6	1100
79.4	11	2.5	10.83	HA51	63A6	3000
35.0	24	3.8	24.55	HA32	63A6	2000
28.2	30	2.8	30.55	HA32	63A6	2000
24.3	34	2.8	35.44	HA32	63A6	2000
19.5	43	2.2	44.10	HA32	63A6	2000
19.5	43	3.4	44.10	HA42	63A6	4300
17.6	47	1.8	48.75	HA32	63A6	2000
17.6	47	2.6	48.75	HA42	63A6	4300
16.8	49	2.2	51.32	HA33	63A6	2000
16.8	49	3.2	51.32	HA43	63A6	4300
14.4	57	1.9	59.65	HA33	63A6	2000
14.4	57	2.8	59.65	HA43	63A6	4300
14.2	59	1.7	60.67	HA32	63A6	2000
14.2	59	2.3	60.67	HA42	63A6	4300
12.9	63	3.3	66.78	H033	63A6	5500
11.9	69	1.5	72.27	HA33	63A6	2000
11.9	69	2.3	72.27	HA43	63A6	4300
11.5	71	3.0	74.84	H033	63A6	5500
9.9	83	3.8	87.05	H043	63A6	6600
9.8	84	3.8	88.02	HA53	63A6	6000
9.6	85	1.2	89.94	HA33	63A6	2000
9.6	85	1.8	89.94	HA43	63A6	4300
8.7	94	2.2	99.27	H033	63A6	5500
8.0	103	2.0	108.05	H033	63A6	5500
7.8	105	1.0	110.51	HA33	63A6	2000
7.8	105	1.5	110.51	HA43	63A6	4300
7.7	106	3.0	111.61	HA53	63A6	6000
7.5	109	2.9	114.55	H043	63A6	6600
7.0	117	1.8	123.71	H033	63A6	5500
6.8	119	2.6	125.69	H043	63A6	6600
6.4	127	0.8	133.88	HA33	63A6	2000
6.4	127	1.2	133.88	HA43	63A6	4300
6.2	132	2.4	138.71	HA53	63A6	6000
6.2	132	3.8	138.71	HA63	63A6	8000
6.1	135	2.3	142.04	H043	63A6	6600
6.0	136	1.5	143.33	H033	63A6	5500
5.5	149	3.5	157.29	H053	63A6	8000
5.3	155	2.0	163.05	HA53	63A6	6000
5.3	155	3.3	163.05	HA63	63A6	8000
5.2	157	2.0	165.38	H043	63A6	6600

5.1 H/HA MOTORREDUCTORES (50Hz)

0.09 kW

n2 [rpm]	M2 [Nm]	fs	i	Reductor	Motor	Fr2 [N]
5.2	158	1.0	166.61	HA43	63A6	4300
4.8	169	1.2	178.61	H033	63A6	5500
4.4	187	1.1	197.17	H033	63A6	5500
4.4	185	2.8	194.56	H053	63A6	8000
4.4	183	0.9	193.30	HA43	63A6	4300
4.3	190	1.7	200.27	HA53	63A6	6000
4.3	190	2.7	200.27	HA63	63A6	8000
4.2	195	1.6	205.07	H043	63A6	6600
4.0	205	2.6	216.38	H053	63A6	8000
3.8	216	1.5	227.50	H043	63A6	6600
3.7	223	1.4	235.41	HA53	63A6	6000
3.7	223	2.3	235.41	HA63	63A6	8000
3.5	233	0.9	245.70	H033	63A6	5500
3.2	254	2.1	267.65	H053	63A6	8000
3.0	268	1.2	282.10	H043	63A6	6600
3.0	270	1.2	284.81	HA53	63A6	6000
3.0	270	1.9	284.81	HA63	63A6	8000
2.4	336	0.9	353.98	HA53	63A6	6000
2.4	336	1.5	353.98	HA63	63A6	8000

0.12 kW

n2 [rpm]	M2 [Nm]	fs	i	Reductor	Motor	Fr2 [N]
181.1	6	3.7	4.75	HA31	63B6	884
170.2	7	3.4	7.88	HA31	63A4	903
170.2	7	3.8	7.88	HA41	63A4	913
168.6	7	3.6	5.10	HA31	63B6	906
157.7	7	3.4	5.45	HA31	63B6	926
136.5	8	2.9	6.30	HA31	63B6	972
123.7	9	1.6	10.83	HA31	63A4	1004
123.7	9	2.2	10.83	HA41	63A4	1015
123.7	9	2.8	10.83	HA51	63A4	2798
109.2	10	2.2	7.88	HA31	63B6	1047
109.2	10	2.6	7.88	HA41	63B6	1058
79.4	14	1.0	10.83	HA31	63B6	1100
79.4	14	1.5	10.83	HA41	63B6	1100
79.4	14	1.9	10.83	HA51	63B6	3000
52.2	21	3.9	16.49	HA32	63B6	1873
43.9	25	3.2	30.55	HA32	63A4	1985
42.4	26	3.6	20.26	HA32	63B6	2000
37.8	29	3.1	35.44	HA32	63A4	2000
35.0	32	2.8	24.55	HA32	63B6	2000
30.4	36	2.5	44.10	HA32	63A4	2000
30.4	36	3.9	44.10	HA42	63A4	4300

5.1 H/HA MOTORREDUCTORES (50Hz)

0.12 kW

n2 [rpm]	M2 [Nm]	fs	i	Reductor	Motor	Fr2 [N]
28.2	39	2.1	30.55	HA32	63B6	2000
28.2	39	3.7	30.55	HA42	63B6	4300
27.5	40	2.0	48.75	HA32	63A4	2000
27.5	40	2.9	48.75	HA42	63A4	4300
26.1	41	2.4	51.32	HA33	63A4	2000
26.1	41	3.6	51.32	HA43	63A4	4300
24.3	46	2.1	35.44	HA32	63B6	2000
24.3	46	3.4	35.44	HA42	63B6	4300
22.5	48	2.1	59.65	HA33	63A4	2000
22.5	48	3.1	59.65	HA43	63A4	4300
22.1	50	1.9	60.67	HA32	63A4	2000
22.1	50	2.6	60.67	HA42	63A4	4300
20.1	54	3.7	66.78	H033	63A4	5500
19.5	57	1.7	44.10	HA32	63B6	2000
19.5	57	2.6	44.10	HA42	63B6	4300
18.5	58	1.7	72.27	HA33	63A4	2000
18.5	58	2.6	72.27	HA43	63A4	4300
17.9	60	3.3	74.84	H033	63A4	5500
17.6	63	1.3	48.75	HA32	63B6	2000
17.6	63	1.9	48.75	HA42	63B6	4300
16.8	65	1.6	51.32	HA33	63B6	2000
16.8	65	2.4	51.32	HA43	63B6	4300
16.0	68	3.1	53.59	H033	63B6	5500
14.9	72	1.4	89.94	HA33	63A4	2000
14.9	72	2.1	89.94	HA43	63A4	4300
14.4	75	1.4	59.65	HA33	63B6	2000
14.4	75	2.1	59.65	HA43	63B6	4300
14.2	78	1.3	60.67	HA32	63B6	2000
14.2	78	1.7	60.67	HA42	63B6	4300
13.5	80	2.5	99.27	H033	63A4	5500
12.9	84	2.5	66.78	H033	63B6	5500
12.4	87	2.3	108.05	H033	63A4	5500
12.1	89	1.1	110.51	HA33	63A4	2000
12.1	89	1.7	110.51	HA43	63A4	4300
12.0	90	3.3	111.61	HA53	63A4	6000
11.9	91	1.1	72.27	HA33	63B6	2000
11.9	91	1.7	72.27	HA43	63B6	4300
11.7	92	3.3	114.55	H043	63A4	6600
11.5	95	2.2	74.84	H033	63B6	5500
11.5	95	3.3	74.88	HA53	63B6	6000
11.2	97	3.2	76.67	H043	63B6	6600
10.8	99	2.0	123.71	H033	63A4	5500
10.7	101	3.0	125.69	H043	63A4	6600
10.0	108	0.9	133.88	HA33	63A4	2000
10.0	108	1.4	133.88	HA43	63A4	4300

5.1 H/HA MOTORREDUCTORES (50Hz)

0.12 kW

n2 [rpm]	M2 [Nm]	fs	i	Reductor	Motor	Fr2 [N]
9.9	110	2.9	87.05	H043	63B6	6600
9.8	111	2.8	88.02	HA53	63B6	6000
9.7	112	2.7	138.71	HA53	63A4	6000
9.6	114	0.9	89.94	HA33	63B6	2000
9.6	114	1.4	89.94	HA43	63B6	4300
9.4	114	2.6	142.04	H043	63A4	6600
9.3	115	1.7	143.33	H033	63A4	5500
8.7	126	1.7	99.27	H033	63B6	5500
8.5	126	4.0	157.29	H053	63A4	8000
8.2	131	2.3	163.05	HA53	63A4	6000
8.2	131	3.7	163.05	HA63	63A4	8000
8.1	133	2.3	165.38	H043	63A4	6600
8.0	137	1.5	108.05	H033	63B6	5500
8.0	134	1.1	166.61	HA43	63A4	4300
7.9	138	3.8	108.95	H053	63B6	8000
7.8	140	1.1	110.51	HA43	63B6	4300
7.7	141	2.2	111.61	HA53	63B6	6000
7.7	141	3.6	111.61	HA63	63B6	8000
7.5	144	1.4	178.61	H033	63A4	5500
7.5	145	2.2	114.55	H043	63B6	6600
7.0	157	1.3	123.71	H033	63B6	5500
6.9	156	3.2	194.56	H053	63A4	8000
6.9	155	1.0	193.30	HA43	63A4	4300
6.8	159	1.3	197.17	H033	63A4	5500
6.8	159	2.0	125.69	H043	63B6	6600
6.7	161	1.9	200.27	HA53	63A4	6000
6.7	161	3.0	200.27	HA63	63A4	8000
6.5	165	1.8	205.07	H043	63A4	6600
6.4	170	3.1	134.76	H053	63B6	8000
6.4	169	0.9	133.88	HA43	63B6	4300
6.2	174	2.9	216.38	H053	63A4	8000
6.2	175	1.8	138.71	HA53	63B6	6000
6.2	175	2.9	138.71	HA63	63B6	8000
6.1	180	1.8	142.04	H043	63B6	6600
6.0	181	1.2	143.33	H033	63B6	5500
5.9	183	1.6	227.50	H043	63A4	6600
5.7	189	1.6	235.41	HA53	63A4	6000
5.7	189	2.5	235.41	HA63	63A4	8000
5.5	198	1.0	245.70	H033	63A4	5500
5.5	199	2.6	157.29	H053	63B6	8000
5.3	206	1.5	163.05	HA53	63B6	6000
5.3	206	2.4	163.05	HA63	63B6	8000
5.2	209	1.5	165.38	H043	63B6	6600
5.0	215	2.3	267.65	H053	63A4	8000
4.8	226	0.9	178.61	H033	63B6	5500

5.1 H/HA MOTORREDUCTORES (50Hz)

0.12 kW

n2 [rpm]	M2 [Nm]	fs	i	Reductor	Motor	Fr2 [N]
4.8	227	1.3	282.10	H043	63A4	6600
4.7	229	1.3	284.81	HA53	63A4	6000
4.7	229	2.1	284.81	HA63	63A4	8000
4.4	246	2.1	194.56	H053	63B6	8000
4.3	253	1.2	200.27	HA53	63B6	6000
4.3	253	2.0	200.27	HA63	63B6	8000
4.2	259	1.2	205.07	H043	63B6	6600
4.0	274	1.9	216.38	H053	63B6	8000
3.8	288	1.1	227.50	H043	63B6	6600
3.8	285	1.1	353.98	HA53	63A4	6000
3.8	285	1.7	353.98	HA63	63A4	8000
3.7	298	1.1	235.41	HA53	63B6	6000
3.7	298	1.7	235.41	HA63	63B6	8000
3.2	339	1.6	267.65	H053	63B6	8000
3.0	360	0.9	284.81	HA53	63B6	6000
3.0	360	1.4	284.81	HA63	63B6	8000
2.4	448	1.1	353.98	HA63	63B6	8000

0.15 kW

n2 [rpm]	M2 [Nm]	fs	i	Reductor	Motor	Fr2 [N]
255.0	6	3.8	3.18	HA31	63C6	789
241.3	6	3.6	3.36	HA31	63C6	804
209.5	7	3.3	3.87	HA31	63C6	842
192.2	7	3.0	4.21	HA31	63C6	867
170.5	8	2.8	4.75	HA31	63C6	902
170.5	8	3.8	4.75	HA41	63C6	912
158.8	9	2.7	5.10	HA31	63C6	924
148.5	9	2.6	5.45	HA31	63C6	945
148.5	9	3.3	5.45	HA41	63C6	955
128.6	11	2.2	6.30	HA31	63C6	991
102.9	14	1.7	7.88	HA31	63C6	1068
102.9	14	1.9	7.88	HA41	63C6	1080
102.9	14	3.1	7.88	HA51	63C6	2975
74.8	19	1.1	10.83	HA41	63C6	1100
74.8	19	1.4	10.83	HA51	63C6	3000
61.1	23	3.7	13.25	HA32	63C6	1777
49.1	28	3.0	16.49	HA32	63C6	1911
40.0	35	2.7	20.26	HA32	63C6	2000
33.0	42	2.1	24.55	HA32	63C6	2000
33.0	42	3.9	24.55	HA42	63C6	4300
26.5	52	1.6	30.55	HA32	63C6	2000
26.5	52	2.8	30.55	HA42	63C6	4300
22.9	61	1.6	35.44	HA32	63C6	2000

5.1 H/HA MOTORREDUCTORES (50Hz)

0.15 kW

n2 [rpm]	M2 [Nm]	fs	i	Reductor	Motor	Fr2 [N]
22.9	61	2.6	35.44	HA42	63C6	4300
18.4	76	1.2	44.10	HA32	63C6	2000
18.4	76	1.9	44.10	HA42	63C6	4300
16.6	84	1.0	48.75	HA32	63C6	2000
16.6	84	1.4	48.75	HA42	63C6	4300
16.3	84	3.8	49.80	HA53	63C6	6000
15.8	86	1.2	51.32	HA33	63C6	2000
15.8	86	1.8	51.32	HA43	63C6	4300
15.1	90	2.3	53.59	H033	63C6	5500
13.6	100	1.0	59.65	HA33	63C6	2000
13.6	100	1.6	59.65	HA43	63C6	4300
13.4	104	1.0	60.67	HA32	63C6	2000
13.4	104	1.3	60.67	HA42	63C6	4300
13.4	101	3.1	60.25	HA53	63C6	6000
13.1	104	3.0	61.83	H043	63C6	6600
12.1	112	1.9	66.78	H033	63C6	5500
11.2	121	0.9	72.27	HA33	63C6	2000
11.2	121	1.3	72.27	HA43	63C6	4300
10.8	126	1.7	74.84	H033	63C6	5500
10.8	126	2.5	74.88	HA53	63C6	6000
10.6	129	2.4	76.67	H043	63C6	6600
9.3	146	2.2	87.05	H043	63C6	6600
9.2	148	2.1	88.02	HA53	63C6	6000
9.2	148	3.4	88.02	HA63	63C6	8000
9.0	151	1.0	89.94	HA43	63C6	4300
8.9	152	3.5	90.51	H053	63C6	8000
8.2	167	1.3	99.27	H033	63C6	5500
7.5	181	1.2	108.05	H033	63C6	5500
7.4	183	2.9	108.95	H053	63C6	8000
7.3	186	0.8	110.51	HA43	63C6	4300
7.3	187	1.7	111.61	HA53	63C6	6000
7.3	187	2.7	111.61	HA63	63C6	8000
7.1	192	1.6	114.55	H043	63C6	6600
6.5	208	1.0	123.71	H033	63C6	5500
6.4	211	1.5	125.69	H043	63C6	6600
6.0	226	2.3	134.76	H053	63C6	8000
5.8	233	1.4	138.71	HA53	63C6	6000
5.8	233	2.2	138.71	HA63	63C6	8000
5.7	238	1.3	142.04	H043	63C6	6600
5.1	264	2.0	157.29	H053	63C6	8000
5.0	274	1.2	163.05	HA53	63C6	6000
5.0	274	1.8	163.05	HA63	63C6	8000
4.9	278	1.1	165.38	H043	63C6	6600
4.2	327	1.6	194.56	H053	63C6	8000
4.0	336	0.9	200.27	HA53	63C6	6000

5.1 H/HA MOTORREDUCTORES (50Hz)

0.15 kW

n2 [rpm]	M2 [Nm]	fs	i	Reductor	Motor	Fr2 [N]
4.0	336	1.5	200.27	HA63	63C6	8000
3.9	344	0.9	205.07	H043	63C6	6600
3.7	363	1.4	216.38	H053	63C6	8000
3.4	395	1.3	235.41	HA63	63C6	8000
3.0	449	1.2	267.65	H053	63C6	8000
2.8	478	1.1	284.81	HA63	63C6	8000
2.3	594	0.8	353.98	HA63	63C6	8000

0.18 kW

n2 [rpm]	M2 [Nm]	fs	i	Reductor	Motor	Fr2 [N]
355.6	5	3.6	7.88	HA31	63A2	706
315.6	5	4.0	4.21	HA31	63B4	735
305.7	6	3.8	2.94	HA31	71A6	743
283.3	6	3.5	3.18	HA31	71A6	762
280.0	6	3.7	4.75	HA31	63B4	765
268.1	6	3.3	3.36	HA31	71A6	776
260.8	6	3.6	5.10	HA31	63B4	783
258.5	6	1.7	10.83	HA31	63A2	785
258.5	6	2.4	10.83	HA41	63A2	794
258.5	6	3.0	10.83	HA51	63A2	2188
243.8	7	3.4	5.45	HA31	63B4	801
232.8	7	3.0	3.87	HA31	71A6	813
213.6	8	2.8	4.21	HA31	71A6	837
211.1	8	2.9	6.30	HA31	63B4	840
189.5	9	2.6	4.75	HA31	71A6	871
189.5	9	3.5	4.75	HA41	71A6	881
176.5	10	2.5	5.10	HA31	71A6	892
168.9	10	2.2	7.88	HA31	63B4	905
168.9	10	2.5	7.88	HA41	63B4	915
165.0	10	2.4	5.45	HA31	71A6	912
165.0	10	3.1	5.45	HA41	71A6	922
142.9	12	2.0	6.30	HA31	71A6	957
122.8	14	1.0	10.83	HA31	63B4	1007
122.8	14	1.5	10.83	HA41	63B4	1018
122.8	14	1.8	10.83	HA51	63B4	2805
117.4	14	3.7	7.67	H041	71A6	1000
114.3	15	1.6	7.88	HA31	71A6	1031
114.3	15	1.8	7.88	HA41	71A6	1042
114.3	15	2.9	7.88	HA51	71A6	2873
102.9	16	3.5	8.75	H041	71A6	1000
91.7	17	3.5	30.55	HA32	63A2	1552
83.1	20	1.0	10.83	HA41	71A6	1100
83.1	20	1.3	10.83	HA51	71A6	3000

5.1 H/HA MOTORREDUCTORES (50Hz)

0.18 kW

n2 [rpm]	M2 [Nm]	fs	i	Reductor	Motor	Fr2 [N]
80.7	20	3.9	16.49	HA32	63B4	1620
79.0	20	3.3	35.44	HA32	63A2	1631
67.9	25	3.4	13.25	HA32	71A6	1716
65.6	25	3.6	20.26	HA32	63B4	1735
63.5	25	2.7	44.10	HA32	63A2	1755
57.4	28	2.2	48.75	HA32	63A2	1814
57.4	28	3.1	48.75	HA42	63A2	3819
54.6	31	2.8	16.49	HA32	71A6	1845
54.6	29	2.6	51.32	HA33	63A2	1846
54.6	29	3.9	51.32	HA43	63A2	3885
54.2	30	2.8	24.55	HA32	63B4	1850
46.9	33	2.3	59.65	HA33	63A2	1940
46.9	33	3.4	59.65	HA43	63A2	4085
46.2	35	2.1	60.67	HA32	63A2	1951
46.2	35	2.8	60.67	HA42	63A2	4108
44.4	38	2.5	20.26	HA32	71A6	1976
43.5	38	2.1	30.55	HA32	63B4	1990
43.5	38	3.7	30.55	HA42	63B4	4189
38.7	40	1.9	72.27	HA33	63A2	2000
38.7	40	2.8	72.27	HA43	63A2	4300
37.5	44	2.0	35.44	HA32	63B4	2000
37.5	44	3.4	35.44	HA42	63B4	4300
37.4	42	3.6	74.84	H033	63A2	5500
36.7	45	2.0	24.55	HA32	71A6	2000
36.7	45	3.6	24.55	HA42	71A6	4300
31.1	50	1.5	89.94	HA33	63A2	2000
31.1	50	2.2	89.94	HA43	63A2	4300
30.3	55	3.8	29.70	H032	71A6	5500
30.2	55	1.6	44.10	HA32	63B4	2000
30.2	55	2.6	44.10	HA42	63B4	4300
29.5	57	1.5	30.55	HA32	71A6	2000
29.5	57	2.6	30.55	HA42	71A6	4300
28.2	55	2.7	99.27	H033	63A2	5500
27.4	61	3.4	32.89	H032	71A6	5500
27.3	60	1.3	48.75	HA32	63B4	2000
27.3	60	1.9	48.75	HA42	63B4	4300
25.9	60	2.5	108.05	H033	63A2	5500
25.9	62	1.6	51.32	HA33	63B4	2000
25.9	62	2.4	51.32	HA43	63B4	4300
25.4	66	1.4	35.44	HA32	71A6	2000
25.4	66	2.4	35.44	HA42	71A6	4300
25.3	62	1.2	110.51	HA33	63A2	2000
25.3	62	1.8	110.51	HA43	63A2	4300
25.1	62	3.6	111.61	HA53	63A2	6000
24.8	65	3.1	53.59	H033	63B4	5500

5.1 H/HA MOTORREDUCTORES (50Hz)

0.18 kW

n2 [rpm]	M2 [Nm]	fs	i	Reductor	Motor	Fr2 [N]
24.4	64	3.5	114.55	H043	63A2	6600
23.7	70	3.0	37.92	H032	71A6	5500
22.6	69	2.2	123.71	H033	63A2	5500
22.3	70	3.2	125.69	H043	63A2	6600
22.3	72	1.4	59.65	HA33	63B4	2000
22.3	72	2.1	59.65	HA43	63B4	4300
21.9	75	1.3	60.67	HA32	63B4	2000
21.9	75	1.7	60.67	HA42	63B4	4300
21.7	77	2.7	41.40	H032	71A6	5500
21.5	75	4.0	61.83	H043	63B4	6600
20.9	75	1.0	133.88	HA33	63A2	2000
20.9	75	1.5	133.88	HA43	63A2	4300
20.6	81	3.6	43.75	H042	71A6	6600
20.4	82	1.2	44.10	HA32	71A6	2000
20.4	82	1.8	44.10	HA42	71A6	4300
20.2	77	2.9	138.71	HA53	63A2	6000
19.9	81	2.5	66.78	H033	63B4	5500
19.7	79	2.8	142.04	H043	63A2	6600
19.5	80	1.9	143.33	H033	63A2	5500
19.0	88	2.4	47.25	H032	71A6	5500
18.9	88	3.3	47.53	H042	71A6	6600
18.5	90	0.9	48.75	HA32	71A6	2000
18.5	90	1.3	48.75	HA42	71A6	4300
18.4	88	1.1	72.27	HA33	63B4	2000
18.4	88	1.7	72.27	HA43	63B4	4300
18.1	90	3.5	49.80	HA53	71A6	6000
17.8	91	2.2	74.84	H033	63B4	5500
17.8	91	3.3	74.88	HA53	63B4	6000
17.5	93	1.1	51.32	HA33	71A6	2000
17.5	93	1.7	51.32	HA43	71A6	4300
17.3	93	3.2	76.67	H043	63B4	6600
17.2	91	2.5	163.05	HA53	63A2	6000
17.2	91	4.0	163.05	HA63	63A2	8000
16.9	92	2.4	165.38	H043	63A2	6600
16.8	97	2.2	53.59	H033	71A6	5500
16.8	93	1.2	166.61	HA43	63A2	4300
16.6	100	2.9	54.25	H042	71A6	6600
15.7	99	1.5	178.61	H033	63A2	5500
15.3	106	2.8	87.05	H043	63B4	6600
15.1	108	1.0	59.65	HA33	71A6	2000
15.1	108	1.5	59.65	HA43	71A6	4300
15.1	107	2.8	88.02	HA53	63B4	6000
14.9	109	2.9	60.25	HA53	71A6	6000
14.8	112	0.9	60.67	HA32	71A6	2000
14.8	109	0.9	89.94	HA33	63B4	2000

5.1 H/HA MOTORREDUCTORES (50Hz)

0.18 kW

n2 [rpm]	M2 [Nm]	fs	i	Reductor	Motor	Fr2 [N]
14.8	112	1.2	60.67	HA42	71A6	4300
14.8	109	1.4	89.94	HA43	63B4	4300
14.6	112	2.8	61.83	H043	71A6	6600
14.5	108	1.0	193.30	HA43	63A2	4300
14.4	108	3.5	194.56	H053	63A2	8000
14.2	110	1.4	197.17	H033	63A2	5500
14.0	112	2.0	200.27	HA53	63A2	6000
14.0	112	3.2	200.27	HA63	63A2	8000
13.7	114	2.0	205.07	H043	63A2	6600
13.5	121	1.7	66.78	H033	71A6	5500
13.4	121	1.7	99.27	H033	63B4	5500
12.9	121	3.1	216.38	H053	63A2	8000
12.5	131	0.8	72.27	HA33	71A6	2000
12.5	131	1.2	72.27	HA43	71A6	4300
12.4	132	4.0	72.75	H053	71A6	8000
12.3	131	1.5	108.05	H033	63B4	5500
12.3	127	1.8	227.50	H043	63A2	6600
12.2	132	3.8	108.95	H053	63B4	8000
12.0	136	1.5	74.84	H033	71A6	5500
12.0	134	1.1	110.51	HA43	63B4	4300
12.0	136	2.3	74.88	HA53	71A6	6000
12.0	136	3.7	74.88	HA63	71A6	8000
11.9	136	2.2	111.61	HA53	63B4	6000
11.9	131	1.7	235.41	HA53	63A2	6000
11.9	136	3.5	111.61	HA63	63B4	8000
11.9	131	2.7	235.41	HA63	63A2	8000
11.7	139	2.3	76.67	H043	71A6	6600
11.6	139	2.2	114.55	H043	63B4	6600
11.4	137	1.1	245.70	H033	63A2	5500
10.8	150	1.3	123.71	H033	63B4	5500
10.6	153	2.0	125.69	H043	63B4	6600
10.5	149	2.5	267.65	H053	63A2	8000
10.3	158	2.0	87.05	H043	71A6	6600
10.2	160	2.0	88.02	HA53	71A6	6000
10.2	160	3.2	88.02	HA63	71A6	8000
10.0	163	1.0	89.94	HA43	71A6	4300
9.9	157	1.4	282.10	H043	63A2	6600
9.9	164	3.2	90.51	H053	71A6	8000
9.9	164	3.1	134.76	H053	63B4	8000
9.9	163	0.9	133.88	HA43	63B4	4300
9.8	159	1.4	284.81	HA53	63A2	6000
9.8	159	2.3	284.81	HA63	63A2	8000
9.6	169	1.8	138.71	HA53	63B4	6000
9.6	169	2.8	138.71	HA63	63B4	8000
9.4	173	1.7	142.04	H043	63B4	6600

5.1 H/HA MOTORREDUCTORES (50Hz)

0.18 kW

n2 [rpm]	M2 [Nm]	fs	i	Reductor	Motor	Fr2 [N]
9.3	174	1.1	143.33	H033	63B4	5500
9.1	180	1.2	99.27	H033	71A6	5500
8.5	191	2.6	157.29	H053	63B4	8000
8.3	196	1.1	108.05	H033	71A6	5500
8.3	198	2.7	108.95	H053	71A6	8000
8.2	198	1.5	163.05	HA53	63B4	6000
8.2	198	2.4	163.05	HA63	63B4	8000
8.1	202	1.6	111.61	HA53	71A6	6000
8.1	202	2.5	111.61	HA63	71A6	8000
8.0	201	1.5	165.38	H043	63B4	6600
7.9	208	1.5	114.55	H043	71A6	6600
7.9	197	1.1	353.98	HA53	63A2	6000
7.9	197	1.8	353.98	HA63	63A2	8000
7.4	217	0.9	178.61	H033	63B4	5500
7.3	224	0.9	123.71	H033	71A6	5500
7.2	228	1.4	125.69	H043	71A6	6600
6.8	236	2.1	194.56	H053	63B4	8000
6.7	244	2.1	134.76	H053	71A6	8000
6.6	246	3.6	135.40	H063	71A6	12000
6.6	243	1.2	200.27	HA53	63B4	6000
6.6	243	2.0	200.27	HA63	63B4	8000
6.5	249	1.2	205.07	H043	63B4	6600
6.5	252	1.3	138.71	HA53	71A6	6000
6.5	252	2.0	138.71	HA63	71A6	8000
6.3	258	1.2	142.04	H043	71A6	6600
6.1	263	1.9	216.38	H053	63B4	8000
6.0	271	3.3	149.51	H063	71A6	12000
5.8	276	1.1	227.50	H043	63B4	6600
5.7	285	1.8	157.29	H053	71A6	8000
5.6	286	1.0	235.41	HA53	63B4	6000
5.6	286	1.7	235.41	HA63	63B4	8000
5.5	296	1.1	163.05	HA53	71A6	6000
5.5	296	1.7	163.05	HA63	71A6	8000
5.4	300	1.1	165.38	H043	71A6	6600
5.3	309	2.9	170.67	H063	71A6	12000
5.0	325	1.5	267.65	H053	63B4	8000
4.8	338	2.6	186.18	H063	71A6	12000
4.7	346	0.9	284.81	HA53	63B4	6000
4.7	346	1.4	284.81	HA63	63B4	8000
4.6	353	1.5	194.56	H053	71A6	8000
4.5	363	0.9	200.27	HA53	71A6	6000
4.5	363	1.4	200.27	HA63	71A6	8000
4.2	392	1.3	216.38	H053	71A6	8000
4.2	390	2.3	215.21	H063	71A6	12000
3.8	426	2.1	234.67	H063	71A6	12000

5.1 H/HA MOTORREDUCTORES (50Hz)

0.18 kW

n2 [rpm]	M2 [Nm]	fs	i	Reductor	Motor	Fr2 [N]
3.8	427	1.2	235.41	HA63	71A6	8000
3.8	430	1.1	353.98	HA63	63B4	8000
3.4	485	1.1	267.65	H053	71A6	8000
3.4	486	1.8	268.00	H063	71A6	12000
3.2	516	1.0	284.81	HA63	71A6	8000

0.22 kW

n2 [rpm]	M2 [Nm]	fs	i	Reductor	Motor	Fr2 [N]
396.2	5	3.9	3.36	HA31	63C4	681
344.0	6	3.5	3.87	HA31	63C4	714
315.6	6	3.3	4.21	HA31	63C4	735
280.0	7	3.0	4.75	HA31	63C4	765
260.8	8	2.9	5.10	HA31	63C4	783
243.8	8	2.8	5.45	HA31	63C4	801
243.8	8	3.6	5.45	HA41	63C4	810
211.1	10	2.4	6.30	HA31	63C4	840
168.9	12	1.8	7.88	HA31	63C4	905
168.9	12	2.1	7.88	HA41	63C4	915
168.9	12	3.3	7.88	HA51	63C4	2522
122.8	17	0.8	10.83	HA31	63C4	1007
122.8	17	1.2	10.83	HA41	63C4	1018
122.8	17	1.5	10.83	HA51	63C4	2805
100.4	20	4.0	13.25	HA32	63C4	1506
80.7	25	3.2	16.49	HA32	63C4	1620
65.6	31	2.9	20.26	HA32	63C4	1735
54.2	37	2.3	24.55	HA32	63C4	1850
43.5	46	1.7	30.55	HA32	63C4	1990
43.5	46	3.0	30.55	HA42	63C4	4189
37.5	54	1.7	35.44	HA32	63C4	2000
37.5	54	2.8	35.44	HA42	63C4	4300
30.2	67	1.3	44.10	HA32	63C4	2000
30.2	67	2.1	44.10	HA42	63C4	4300
27.3	74	1.1	48.75	HA32	63C4	2000
27.3	74	1.6	48.75	HA42	63C4	4300
25.9	76	1.3	51.32	HA33	63C4	2000
25.9	76	2.0	51.32	HA43	63C4	4300
24.8	80	2.5	53.59	H033	63C4	5500
22.3	89	1.1	59.65	HA33	63C4	2000
22.3	89	1.7	59.65	HA43	63C4	4300
22.1	89	3.4	60.25	HA53	63C4	6000
21.9	92	1.0	60.67	HA32	63C4	2000
21.9	92	1.4	60.67	HA42	63C4	4300
21.5	92	3.3	61.83	H043	63C4	6600

5.1 H/HA MOTORREDUCTORES (50Hz)

0.22 kW

n2 [rpm]	M2 [Nm]	fs	i	Reductor	Motor	Fr2 [N]
19.9	99	2.0	66.78	H033	63C4	5500
18.4	107	0.9	72.27	HA33	63C4	2000
18.4	107	1.4	72.27	HA43	63C4	4300
17.8	111	1.8	74.84	H033	63C4	5500
17.8	111	2.7	74.88	HA53	63C4	6000
17.3	114	2.6	76.67	H043	63C4	6600
15.3	129	2.3	87.05	H043	63C4	6600
15.1	131	2.3	88.02	HA53	63C4	6000
15.1	131	3.7	88.02	HA63	63C4	8000
14.8	134	1.1	89.94	HA43	63C4	4300
14.7	134	3.7	90.51	H053	63C4	8000
13.4	147	1.4	99.27	H033	63C4	5500
12.3	160	1.2	108.05	H033	63C4	5500
12.2	162	3.1	108.95	H053	63C4	8000
12.0	164	0.9	110.51	HA43	63C4	4300
11.9	166	1.8	111.61	HA53	63C4	6000
11.9	166	2.9	111.61	HA63	63C4	8000
11.6	170	1.8	114.55	H043	63C4	6600
10.8	184	1.1	123.71	H033	63C4	5500
10.6	187	1.6	125.69	H043	63C4	6600
9.9	200	2.5	134.76	H053	63C4	8000
9.6	206	1.5	138.71	HA53	63C4	6000
9.6	206	2.3	138.71	HA63	63C4	8000
9.4	211	1.4	142.04	H043	63C4	6600
9.3	213	0.9	143.33	H033	63C4	5500
8.5	234	2.1	157.29	H053	63C4	8000
8.2	242	1.2	163.05	HA53	63C4	6000
8.2	242	2.0	163.05	HA63	63C4	8000
8.0	246	1.2	165.38	H043	63C4	6600
6.8	289	1.7	194.56	H053	63C4	8000
6.6	297	1.0	200.27	HA53	63C4	6000
6.6	297	1.6	200.27	HA63	63C4	8000
6.5	305	1.0	205.07	H043	63C4	6600
6.1	321	1.6	216.38	H053	63C4	8000
5.6	350	0.9	235.41	HA53	63C4	6000
5.6	350	1.4	235.41	HA63	63C4	8000
5.0	397	1.3	267.65	H053	63C4	8000
4.7	423	1.1	284.81	HA63	63C4	8000
3.8	526	0.9	353.98	HA63	63C4	8000

0.25 kW

n2 [rpm]	M2 [Nm]	fs	i	Reductor	Motor	Fr2 [N]
513.3	4	4.0	5.45	HA31	63B2	625

5.1 H/HA MOTORREDUCTORES (50Hz)

0.25 kW

n2 [rpm]	M2 [Nm]	fs	i	Reductor	Motor	Fr2 [N]
448.3	5	3.9	2.94	HA31	63D4	654
444.4	5	3.4	6.30	HA31	63B2	656
437.6	5	3.8	3.18	HA31	71A4	659
415.6	6	3.6	3.18	HA31	63D4	670
414.0	6	3.6	3.36	HA31	71A4	671
393.2	6	3.4	3.36	HA31	63D4	683
359.5	6	3.3	3.87	HA31	71A4	704
355.6	6	2.6	7.88	HA31	63B2	706
355.6	6	3.0	7.88	HA41	63B2	714
352.9	7	3.0	2.55	HA31	71B6	708
341.4	7	3.1	3.87	HA31	63D4	716
329.8	7	3.0	4.21	HA31	71A4	724
313.2	7	2.8	4.21	HA31	63D4	737
305.7	8	2.7	2.94	HA31	71B6	743
305.7	8	3.4	2.94	HA41	71B6	751
292.6	8	2.8	4.75	HA31	71A4	754
292.6	8	3.8	4.75	HA41	71A4	762
283.3	8	2.5	3.18	HA31	71B6	762
277.9	8	2.6	4.75	HA31	63D4	767
277.9	8	3.6	4.75	HA41	63D4	775
272.5	8	2.7	5.10	HA31	71A4	772
268.1	9	2.4	3.36	HA31	71B6	776
258.8	9	2.6	5.10	HA31	63D4	785
258.5	9	1.2	10.83	HA31	63B2	785
258.5	9	1.7	10.83	HA41	63B2	794
258.5	9	2.2	10.83	HA51	63B2	2188
254.8	9	2.5	5.45	HA31	71A4	789
254.8	9	3.3	5.45	HA41	71A4	798
242.0	10	2.4	5.45	HA31	63D4	803
242.0	10	3.1	5.45	HA41	63D4	812
232.8	10	2.2	3.87	HA31	71B6	813
220.6	10	2.2	6.30	HA31	71A4	828
213.6	11	2.0	4.21	HA31	71B6	837
209.5	11	2.1	6.30	HA31	63D4	842
189.5	12	1.9	4.75	HA31	71B6	871
189.5	12	2.6	4.75	HA41	71B6	881
181.3	13	3.9	7.67	H041	71A4	1000
180.0	13	3.6	5.00	H041	71B6	1000
176.5	13	1.7	7.88	HA31	71A4	892
176.5	13	1.8	5.10	HA31	71B6	892
176.5	13	1.9	7.88	HA41	71A4	902
176.5	13	3.0	7.88	HA51	71A4	2485
167.6	14	1.6	7.88	HA31	63D4	907
167.6	14	1.8	7.88	HA41	63D4	918
167.6	14	2.9	7.88	HA51	63D4	2528

5.1 H/HA MOTORREDUCTORES (50Hz)

0.25 kW

n2 [rpm]	M2 [Nm]	fs	i	Reductor	Motor	Fr2 [N]
165.0	14	1.7	5.45	HA31	71B6	912
165.0	14	2.2	5.45	HA41	71B6	922
165.0	14	3.7	5.45	HA51	71B6	2542
163.6	14	3.7	5.50	H041	71B6	1000
158.9	15	3.8	8.75	H041	71A4	1000
147.8	16	3.3	6.09	H041	71B6	1000
142.9	16	1.5	6.30	HA31	71B6	957
128.3	18	1.1	10.83	HA41	71A4	1003
128.3	18	1.4	10.83	HA51	71A4	2764
121.8	19	1.1	10.83	HA41	63D4	1020
121.8	19	1.3	10.83	HA51	63D4	2812
117.4	20	2.6	7.67	H041	71B6	1000
114.3	20	1.1	7.88	HA31	71B6	1031
114.3	20	1.3	7.88	HA41	71B6	1042
114.3	20	2.1	7.88	HA51	71B6	2873
114.1	19	3.3	24.55	HA32	63B2	1443
111.0	21	3.8	8.11	HA32	71B6	1457
104.9	22	3.7	13.25	HA32	71A4	1484
102.9	23	2.5	8.75	H041	71B6	1000
99.6	23	3.5	13.25	HA32	63D4	1510
91.7	24	2.5	30.55	HA32	63B2	1552
84.3	27	2.9	16.49	HA32	71A4	1596
83.1	28	0.9	10.83	HA51	71B6	3000
82.3	28	3.4	10.94	HA32	71B6	1609
80.1	29	2.8	16.49	HA32	63D4	1624
79.0	28	2.4	35.44	HA32	63B2	1631
68.6	33	2.7	20.26	HA32	71A4	1710
67.9	34	2.5	13.25	HA32	71B6	1716
65.2	35	2.6	20.26	HA32	63D4	1740
63.5	35	1.9	44.10	HA32	63B2	1755
63.5	35	3.0	44.10	HA42	63B2	3694
57.4	39	1.6	48.75	HA32	63B2	1814
57.4	39	2.2	48.75	HA42	63B2	3819
56.6	40	2.1	24.55	HA32	71A4	1823
56.6	40	3.8	24.55	HA42	71A4	3837
54.6	42	2.0	16.49	HA32	71B6	1845
54.6	40	1.9	51.32	HA33	63B2	1846
54.6	42	3.5	16.49	HA42	71B6	3885
54.6	40	2.8	51.32	HA43	63B2	3885
53.8	43	2.0	24.55	HA32	63D4	1854
53.8	43	3.6	24.55	HA42	63D4	3904
52.2	41	3.6	53.59	H033	63B2	5500
46.9	46	1.6	59.65	HA33	63B2	1940
46.9	46	2.4	59.65	HA43	63B2	4085
46.2	48	1.5	60.67	HA32	63B2	1951

5.1 H/HA MOTORREDUCTORES (50Hz)

0.25 kW

n2 [rpm]	M2 [Nm]	fs	i	Reductor	Motor	Fr2 [N]
46.2	48	2.0	60.67	HA42	63B2	4108
45.5	50	1.6	30.55	HA32	71A4	1961
45.5	50	2.8	30.55	HA42	71A4	4128
44.4	52	1.8	20.26	HA32	71B6	1976
44.4	52	3.0	20.26	HA42	71B6	4161
43.2	53	1.5	30.55	HA32	63D4	1995
43.2	53	2.6	30.55	HA42	63D4	4199
42.3	54	3.7	32.89	H032	71A4	5500
41.9	52	2.9	66.78	H033	63B2	5500
39.7	58	3.6	22.68	H032	71B6	5500
39.2	58	1.5	35.44	HA32	71A4	2000
39.2	58	2.6	35.44	HA42	71A4	4300
38.7	56	1.3	72.27	HA33	63B2	2000
38.7	56	2.0	72.27	HA43	63B2	4300
37.8	61	3.4	23.83	H032	71B6	5500
37.4	58	2.6	74.84	H033	63B2	5500
37.4	58	3.9	74.88	HA53	63B2	5508
37.2	62	1.5	35.44	HA32	63D4	2000
37.2	62	2.4	35.44	HA42	63D4	4300
36.7	63	3.2	37.92	H032	71A4	5500
36.7	63	1.4	24.55	HA32	71B6	2000
36.7	63	2.6	24.55	HA42	71B6	4300
36.5	59	3.8	76.67	H043	63B2	6600
34.1	68	3.1	26.39	H032	71B6	5500
33.6	68	2.9	41.40	H032	71A4	5500
32.2	67	3.3	87.05	H043	63B2	6600
31.8	72	3.9	43.75	H042	71A4	6600
31.8	68	3.3	88.02	HA53	63B2	5813
31.5	73	1.2	44.10	HA32	71A4	2000
31.5	73	1.9	44.10	HA42	71A4	4300
31.1	70	1.1	89.94	HA33	63B2	2000
31.1	70	1.6	89.94	HA43	63B2	4300
30.3	76	2.7	29.70	H032	71B6	5500
29.9	77	1.2	44.10	HA32	63D4	2000
29.9	77	1.8	44.10	HA42	63D4	4300
29.6	78	3.8	30.45	H042	71B6	6600
29.5	79	1.1	30.55	HA32	71B6	2000
29.5	79	1.9	30.55	HA42	71B6	4300
29.4	78	2.6	47.25	H032	71A4	5500
29.2	78	3.6	47.53	H042	71A4	6600
28.5	80	1.0	48.75	HA32	71A4	2000
28.5	80	1.4	48.75	HA42	71A4	4300
28.2	77	2.0	99.27	H033	63B2	5500
27.9	80	3.7	49.80	HA53	71A4	6000
27.4	85	2.5	32.89	H032	71B6	5500

5.1 H/HA MOTORREDUCTORES (50Hz)

0.25 kW

n2 [rpm]	M2 [Nm]	fs	i	Reductor	Motor	Fr2 [N]
27.1	85	0.9	48.75	HA32	63D4	2000
27.1	83	1.2	51.32	HA33	71A4	2000
27.1	85	1.4	48.75	HA42	63D4	4300
27.1	83	1.8	51.32	HA43	71A4	4300
26.5	85	3.5	49.80	HA53	63D4	6000
26.4	88	3.4	34.10	H042	71B6	6600
25.9	87	2.3	53.59	H033	71A4	5500
25.9	84	1.8	108.05	H033	63B2	5500
25.7	87	1.1	51.32	HA33	63D4	2000
25.7	87	1.7	51.32	HA43	63D4	4300
25.6	89	3.1	54.25	H042	71A4	6600
25.4	91	1.0	35.44	HA32	71B6	2000
25.4	91	1.7	35.44	HA42	71B6	4300
25.3	85	1.3	110.51	HA43	63B2	4300
25.1	86	2.6	111.61	HA53	63B2	6000
24.6	91	2.2	53.59	H033	63D4	5500
24.4	89	2.5	114.55	H043	63B2	6600
23.8	97	3.0	37.76	H042	71B6	6600
23.7	98	2.2	37.92	H032	71B6	5500
23.3	96	1.0	59.65	HA33	71A4	2000
23.3	96	1.6	59.65	HA43	71A4	4300
23.1	97	3.1	60.25	HA53	71A4	6000
22.9	100	0.9	60.67	HA32	71A4	2000
22.9	100	1.3	60.67	HA42	71A4	4300
22.6	96	1.6	123.71	H033	63B2	5500
22.5	100	3.0	61.83	H043	71A4	6600
22.3	97	2.3	125.69	H043	63B2	6600
22.1	101	1.0	59.65	HA33	63D4	2000
22.1	101	1.5	59.65	HA43	63D4	4300
21.9	102	2.9	60.25	HA53	63D4	6000
21.8	105	0.9	60.67	HA32	63D4	2000
21.8	105	1.2	60.67	HA42	63D4	4300
21.7	106	2.0	41.40	H032	71B6	5500
21.3	105	2.9	61.83	H043	63D4	6600
20.9	104	1.1	133.88	HA43	63B2	4300
20.8	108	1.9	66.78	H033	71A4	5500
20.8	104	3.6	134.76	H053	63B2	8000
20.6	113	2.6	43.75	H042	71B6	6600
20.4	113	0.8	44.10	HA32	71B6	2000
20.4	113	1.3	44.10	HA42	71B6	4300
20.2	107	2.1	138.71	HA53	63B2	6000
20.2	107	3.4	138.71	HA63	63B2	8000
19.8	114	1.8	66.78	H033	63D4	5500
19.7	110	2.0	142.04	H043	63B2	6600
19.5	111	1.4	143.33	H033	63B2	5500

5.1 H/HA MOTORREDUCTORES (50Hz)

0.25 kW

n2 [rpm]	M2 [Nm]	fs	i	Reductor	Motor	Fr2 [N]
19.2	117	0.9	72.27	HA33	71A4	2000
19.2	117	1.3	72.27	HA43	71A4	4300
19.0	122	1.7	47.25	H032	71B6	5500
18.9	122	2.4	47.53	H042	71B6	6600
18.6	121	1.7	74.84	H033	71A4	5500
18.6	121	2.5	74.88	HA53	71A4	6000
18.6	121	4.0	74.88	HA63	71A4	8000
18.5	125	1.0	48.75	HA42	71B6	4300
18.3	123	0.8	72.27	HA33	63D4	2000
18.3	123	1.2	72.27	HA43	63D4	4300
18.1	124	2.4	76.67	H043	71A4	6600
18.1	125	2.5	49.80	HA53	71B6	6000
17.8	122	3.1	157.29	H053	63B2	8000
17.6	127	1.6	74.84	H033	63D4	5500
17.6	127	2.4	74.88	HA53	63D4	6000
17.6	127	3.8	74.88	HA63	63D4	8000
17.5	129	0.8	51.32	HA33	71B6	2000
17.5	129	1.2	51.32	HA43	71B6	4300
17.2	130	2.3	76.67	H043	63D4	6600
17.2	126	1.8	163.05	HA53	63B2	6000
17.2	126	2.9	163.05	HA63	63B2	8000
16.9	128	1.8	165.38	H043	63B2	6600
16.8	135	1.6	53.59	H033	71B6	5500
16.6	140	2.1	54.25	H042	71B6	6600
16.0	141	2.1	87.05	H043	71A4	6600
16.0	144	3.6	56.11	H052	71B6	8000
15.8	142	2.1	88.02	HA53	71A4	6000
15.8	142	3.4	88.02	HA63	71A4	8000
15.7	138	1.1	178.61	H033	63B2	5500
15.5	145	1.0	89.94	HA43	71A4	4300
15.4	146	3.4	90.51	H053	71A4	8000
15.3	148	3.5	58.81	H053	71B6	8000
15.2	148	2.0	87.05	H043	63D4	6600
15.1	150	1.0	59.65	HA43	71B6	4300
15.0	150	2.0	88.02	HA53	63D4	6000
15.0	150	3.2	88.02	HA63	63D4	8000
14.9	152	2.1	60.25	HA53	71B6	6000
14.9	152	3.3	60.25	HA63	71B6	8000
14.8	156	0.9	60.67	HA42	71B6	4300
14.7	153	1.0	89.94	HA43	63D4	4300
14.6	156	2.0	61.83	H043	71B6	6600
14.6	154	3.2	90.51	H053	63D4	8000
14.4	150	2.5	194.56	H053	63B2	8000
14.0	160	1.2	99.27	H033	71A4	5500
14.0	155	1.5	200.27	HA53	63B2	6000

5.1 H/HA MOTORREDUCTORES (50Hz)

0.25 kW

n2 [rpm]	M2 [Nm]	fs	i	Reductor	Motor	Fr2 [N]
14.0	155	2.3	200.27	HA63	63B2	8000
13.7	159	1.4	205.07	H043	63B2	6600
13.5	168	1.2	66.78	H033	71B6	5500
13.3	169	1.2	99.27	H033	63D4	5500
12.9	174	1.1	108.05	H033	71A4	5500
12.9	167	2.2	216.38	H053	63B2	8000
12.8	176	2.8	108.95	H053	71A4	8000
12.6	178	0.8	110.51	HA43	71A4	4300
12.5	182	0.9	72.27	HA43	71B6	4300
12.5	180	1.7	111.61	HA53	71A4	6000
12.5	180	2.7	111.61	HA63	71A4	8000
12.4	183	2.9	72.75	H053	71B6	8000
12.3	176	1.3	227.50	H043	63B2	6600
12.2	184	1.1	108.05	H033	63D4	5500
12.1	185	1.6	114.55	H043	71A4	6600
12.1	185	2.7	108.95	H053	63D4	8000
12.0	188	1.1	74.84	H033	71B6	5500
12.0	189	1.7	74.88	HA53	71B6	6000
12.0	189	2.7	74.88	HA63	71B6	8000
11.9	182	1.2	235.41	HA53	63B2	6000
11.9	182	2.0	235.41	HA63	63B2	8000
11.8	190	1.6	111.61	HA53	63D4	6000
11.8	190	2.5	111.61	HA63	63D4	8000
11.7	193	1.6	76.67	H043	71B6	6600
11.5	195	1.5	114.55	H043	63D4	6600
11.2	200	1.0	123.71	H033	71A4	5500
11.1	203	1.5	125.69	H043	71A4	6600
10.7	210	1.0	123.71	H033	63D4	5500
10.5	214	1.4	125.69	H043	63D4	6600
10.5	207	1.8	267.65	H053	63B2	8000
10.3	219	1.4	87.05	H043	71B6	6600
10.3	218	2.3	134.76	H053	71A4	8000
10.3	219	3.9	135.40	H063	71A4	12000
10.2	222	1.4	88.02	HA53	71B6	6000
10.2	222	2.3	88.02	HA63	71B6	8000
10.0	224	1.3	138.71	HA53	71A4	6000
10.0	224	2.1	138.71	HA63	71A4	8000
9.9	218	1.0	282.10	H043	63B2	6600
9.9	228	2.3	90.51	H053	71B6	8000
9.8	229	1.3	142.04	H043	71A4	6600
9.8	229	2.2	134.76	H053	63D4	8000
9.8	220	1.0	284.81	HA53	63B2	6000
9.8	220	1.6	284.81	HA63	63B2	8000
9.5	239	3.7	94.76	H063	71B6	12000
9.5	236	1.3	138.71	HA53	63D4	6000

5.1 H/HA MOTORREDUCTORES (50Hz)

0.25 kW

n2 [rpm]	M2 [Nm]	fs	i	Reductor	Motor	Fr2 [N]
9.5	236	2.0	138.71	HA63	63D4	8000
9.3	241	1.2	142.04	H043	63D4	6600
9.3	241	3.5	149.51	H063	71A4	12000
8.8	254	2.0	157.29	H053	71A4	8000
8.5	263	1.1	163.05	HA53	71A4	6000
8.5	263	1.8	163.05	HA63	71A4	8000
8.4	267	1.1	165.38	H043	71A4	6600
8.4	267	1.9	157.29	H053	63D4	8000
8.3	274	1.9	108.95	H053	71B6	8000
8.1	276	3.1	170.67	H063	71A4	12000
8.1	281	1.1	111.61	HA53	71B6	6000
8.1	277	1.1	163.05	HA53	63D4	6000
8.1	281	1.8	111.61	HA63	71B6	8000
8.1	277	1.7	163.05	HA63	63D4	8000
8.0	281	1.1	165.38	H043	63D4	6600
7.9	288	1.1	114.55	H043	71B6	6600
7.9	274	1.3	353.98	HA63	63B2	8000
7.6	297	3.0	118.00	H063	71B6	12000
7.5	301	2.8	186.18	H063	71A4	12000
7.2	317	1.0	125.69	H043	71B6	6600
7.1	314	1.6	194.56	H053	71A4	8000
6.9	323	0.9	200.27	HA53	71A4	6000
6.9	323	1.5	200.27	HA63	71A4	8000
6.8	331	0.9	205.07	H043	71A4	6600
6.8	331	1.5	194.56	H053	63D4	8000
6.7	339	1.5	134.76	H053	71B6	8000
6.6	341	2.6	135.40	H063	71B6	12000
6.6	340	0.9	200.27	HA53	63D4	6000
6.6	340	1.4	200.27	HA63	63D4	8000
6.5	347	2.4	215.21	H063	71A4	12000
6.5	349	0.9	138.71	HA53	71B6	6000
6.5	349	1.4	138.71	HA63	71B6	8000
6.4	349	1.4	216.38	H053	71A4	8000
6.1	368	1.4	216.38	H053	63D4	8000
6.0	377	2.4	149.51	H063	71B6	12000
5.9	379	2.2	234.67	H063	71A4	12000
5.9	380	1.3	235.41	HA63	71A4	8000
5.7	396	1.3	157.29	H053	71B6	8000
5.6	400	1.2	235.41	HA63	63D4	8000
5.5	411	0.8	163.05	HA53	71B6	6000
5.5	411	1.2	163.05	HA63	71B6	8000
5.3	430	2.1	170.67	H063	71B6	12000
5.2	432	1.2	267.65	H053	71A4	8000
5.2	433	2.0	268.00	H063	71A4	12000
4.9	455	1.1	267.65	H053	63D4	8000

5.1 H/HA MOTORREDUCTORES (50Hz)

0.25 kW

n2 [rpm]	M2 [Nm]	fs	i	Reductor	Motor	Fr2 [N]
4.9	460	1.0	284.81	HA63	71A4	8000
4.8	469	1.9	186.18	H063	71B6	12000
4.6	490	1.1	194.56	H053	71B6	8000
4.6	484	1.0	284.81	HA63	63D4	8000
4.5	504	1.0	200.27	HA63	71B6	8000
4.2	545	1.0	216.38	H053	71B6	8000
4.2	542	1.6	215.21	H063	71B6	12000
3.9	572	0.8	353.98	HA63	71A4	8000
3.8	591	1.5	234.67	H063	71B6	12000
3.8	593	0.9	235.41	HA63	71B6	8000
3.4	675	1.3	268.00	H063	71B6	12000

0.37 kW

n2 [rpm]	M2 [Nm]	fs	i	Reductor	Motor	Fr2 [N]
878.3	4	4.0	3.18	HA31	63C2	522
840.0	4	3.8	3.36	HA31	71A2	530
831.1	4	3.8	3.36	HA31	63C2	532
729.3	5	3.5	3.87	HA31	71A2	556
721.6	5	3.4	3.87	HA31	63C2	558
669.2	5	3.2	4.21	HA31	71A2	572
662.0	5	3.2	4.21	HA31	63C2	574
593.7	6	3.0	4.75	HA31	71A2	595
587.4	6	2.9	4.75	HA31	63C2	597
587.4	6	4.0	4.75	HA41	63C2	604
552.9	6	2.9	5.10	HA31	71A2	610
547.1	6	2.9	5.10	HA31	63C2	612
541.2	6	3.0	2.55	HA31	71B4	614
517.0	6	2.7	5.45	HA31	71A2	623
517.0	6	3.5	5.45	HA41	71A2	630
511.5	6	2.7	5.45	HA31	63C2	626
511.5	6	3.5	5.45	HA41	63C2	633
470.0	7	3.6	2.00	H041	80A6	872
468.7	7	2.7	2.94	HA31	71B4	644
468.7	7	3.4	2.94	HA41	71B4	651
447.6	7	2.3	6.30	HA31	71A2	654
442.9	7	2.3	6.30	HA31	63C2	656
440.0	8	3.3	2.00	H041	71C6	889
434.4	8	2.5	3.18	HA31	71B4	661
411.1	8	2.4	3.36	HA31	71B4	673
369.3	9	3.4	2.55	H041	80A6	938
368.6	9	2.1	2.55	HA31	80A6	698
358.1	9	1.8	7.88	HA31	71A2	705
358.1	9	2.0	7.88	HA41	71A2	712

5.1 H/HA MOTORREDUCTORES (50Hz)

0.37 kW

n2 [rpm]	M2 [Nm]	fs	i	Reductor	Motor	Fr2 [N]
358.1	9	3.2	7.88	HA51	71A2	1963
356.9	10	2.2	3.87	HA31	71B4	705
354.3	9	1.8	7.88	HA31	63C2	707
354.3	9	2.0	7.88	HA41	63C2	715
354.3	9	3.2	7.88	HA51	63C2	1970
346.3	10	3.2	2.71	H041	80A6	956
345.7	10	3.1	2.55	H041	71C6	956
345.1	10	2.0	2.55	HA31	71C6	713
327.5	10	2.0	4.21	HA31	71B4	726
324.2	11	3.0	2.71	H041	71C6	975
319.2	11	1.9	2.94	HA31	80A6	732
319.2	11	2.4	2.94	HA41	80A6	740
319.2	11	3.9	2.94	HA51	80A6	2040
302.7	11	3.7	3.11	H041	80A6	995
298.9	12	1.8	2.94	HA31	71C6	748
298.9	12	2.3	2.94	HA41	71C6	757
298.9	12	3.6	2.94	HA51	71C6	2085
295.9	12	1.8	3.18	HA31	80A6	751
290.5	12	1.9	4.75	HA31	71B4	755
290.5	12	2.5	4.75	HA41	71B4	764
283.4	12	3.4	3.11	H041	71C6	1000
280.0	12	1.7	3.36	HA31	80A6	765
277.0	12	1.7	3.18	HA31	71C6	767
276.0	12	3.6	5.00	H041	71B4	1000
270.6	13	1.8	5.10	HA31	71B4	773
262.1	13	1.6	3.36	HA31	71C6	782
262.0	13	3.6	3.59	H041	80A6	1000
260.3	13	1.2	10.83	HA41	71A2	792
260.3	13	1.5	10.83	HA51	71A2	2183
257.5	13	1.2	10.83	HA41	63C2	795
257.5	13	1.5	10.83	HA51	63C2	2191
253.0	14	1.7	5.45	HA31	71B4	791
253.0	14	2.2	5.45	HA41	71B4	800
253.0	14	3.7	5.45	HA51	71B4	2204
250.9	14	3.7	5.50	H041	71B4	1000
245.2	14	3.3	3.59	H041	71C6	1000
243.1	14	1.5	3.87	HA31	80A6	802
227.6	15	1.4	3.87	HA31	71C6	819
226.6	15	3.3	6.09	H041	71B4	1000
223.8	15	3.1	4.20	H041	80A6	1000
223.1	16	1.4	4.21	HA31	80A6	825
219.0	16	1.5	6.30	HA31	71B4	830
212.8	15	3.9	13.25	HA32	71A2	1172
210.6	16	3.9	13.25	HA32	63C2	1177
209.5	17	2.9	4.20	H041	71C6	1000

5.1 H/HA MOTORREDUCTORES (50Hz)

0.37 kW

n2 [rpm]	M2 [Nm]	fs	i	Reductor	Motor	Fr2 [N]
208.8	17	1.3	4.21	HA31	71C6	843
197.9	17	1.3	4.75	HA31	80A6	859
197.9	17	1.8	4.75	HA41	80A6	868
197.9	17	3.0	4.75	HA51	80A6	2392
188.0	18	2.6	5.00	H041	80A6	1000
185.3	19	1.2	4.75	HA31	71C6	878
185.3	19	1.7	4.75	HA41	71C6	887
185.3	19	2.8	4.75	HA51	71C6	2445
180.0	19	2.6	7.67	H041	71B4	1000
176.0	20	2.4	5.00	H041	71C6	1000
175.2	20	1.1	7.88	HA31	71B4	894
175.2	20	1.3	7.88	HA41	71B4	904
175.2	20	2.0	7.88	HA51	71B4	2491
172.5	20	1.2	5.10	HA31	71C6	899
172.3	20	1.6	5.45	HA41	80A6	909
172.3	20	2.6	5.45	HA51	80A6	2505
171.0	19	3.1	16.49	HA32	71A2	1261
170.9	20	2.6	5.50	H041	80A6	1000
170.2	20	3.8	8.11	HA32	71B4	1263
169.2	19	3.1	16.49	HA32	63C2	1266
161.3	21	1.1	5.45	HA31	71C6	919
161.3	21	1.5	5.45	HA41	71C6	929
161.3	21	2.4	5.45	HA51	71C6	2561
160.0	22	2.4	5.50	H041	71C6	1000
157.7	22	2.5	8.75	H041	71B4	1000
154.3	22	2.3	6.09	H041	80A6	1000
144.5	24	2.2	6.09	H041	71C6	1000
144.2	24	3.5	6.52	HA32	80A6	1335
139.7	25	1.0	6.30	HA31	71C6	964
139.2	24	2.9	20.26	HA32	71A2	1351
137.7	24	2.8	20.26	HA32	63C2	1355
135.0	25	3.3	6.52	HA32	71C6	1364
128.2	27	3.9	7.33	H051	80A6	2500
127.4	27	0.9	10.83	HA51	71B4	2771
126.2	27	3.3	10.94	HA32	71B4	1396
122.6	28	1.9	7.67	H041	80A6	1000
121.3	29	3.3	7.75	HA61	80A6	4215
120.0	29	3.6	7.33	H051	71C6	2500
115.9	30	2.7	8.11	HA32	80A6	1436
114.9	28	2.2	24.55	HA32	71A2	1440
114.8	30	1.7	7.67	H041	71C6	1000
113.7	29	2.2	24.55	HA32	63C2	1445
112.2	31	3.4	8.38	H051	80A6	2500
111.7	31	0.8	7.88	HA41	71C6	1050
111.7	31	1.4	7.88	HA51	71C6	2894

5.1 H/HA MOTORREDUCTORES (50Hz)

0.37 kW

n2 [rpm]	M2 [Nm]	fs	i	Reductor	Motor	Fr2 [N]
108.5	32	2.5	8.11	HA32	71C6	1468
107.4	32	1.8	8.75	H041	80A6	1000
105.1	33	3.2	8.38	H051	71C6	2500
104.2	33	2.5	13.25	HA32	71B4	1488
100.6	34	1.7	8.75	H041	71C6	1000
99.2	35	4.0	8.87	H032	71C6	5404
92.7	37	4.0	10.14	H032	80A6	5500
92.3	35	1.7	30.55	HA32	71A2	1549
92.3	35	3.0	30.55	HA42	71A2	3260
91.3	36	1.7	30.55	HA32	63C2	1554
91.3	36	2.9	30.55	HA42	63C2	3272
88.1	39	1.9	10.67	HA61	80A6	4500
86.8	39	3.7	10.14	H032	71C6	5500
86.0	40	2.4	10.94	HA32	80A6	1586
86.0	40	4.0	10.94	HA42	80A6	3339
85.7	38	3.9	32.89	H032	71A2	5500
83.7	41	2.0	16.49	HA32	71B4	1600
83.7	41	3.5	16.49	HA42	71B4	3369
80.5	43	2.2	10.94	HA32	71C6	1621
80.5	43	3.7	10.94	HA42	71C6	3413
79.9	43	3.6	11.76	H032	80A6	5500
79.6	41	1.6	35.44	HA32	71A2	1627
79.6	41	2.7	35.44	HA42	71A2	3426
78.7	42	1.6	35.44	HA32	63C2	1633
78.7	42	2.7	35.44	HA42	63C2	3438
74.8	46	3.3	11.76	H032	71C6	5500
74.4	44	3.4	37.92	H032	71A2	5500
70.9	48	1.7	13.25	HA32	80A6	1691
70.9	48	3.0	13.25	HA42	80A6	3560
68.5	50	3.6	13.72	H032	80A6	5500
68.1	48	3.1	41.40	H032	71A2	5500
68.1	50	1.8	20.26	HA32	71B4	1714
68.1	50	3.0	20.26	HA42	71B4	3608
66.4	52	1.6	13.25	HA32	71C6	1728
66.4	52	2.8	13.25	HA42	71C6	3639
64.1	53	3.3	13.72	H032	71C6	5500
64.1	53	3.3	14.66	H032	80A6	5500
63.9	51	1.3	44.10	HA32	71A2	1750
63.9	51	2.1	44.10	HA42	71A2	3685
63.3	52	1.3	44.10	HA32	63C2	1757
63.3	52	2.0	44.10	HA42	63C2	3698
60.8	56	3.6	22.68	H032	71B4	5500
60.0	57	3.1	14.66	H032	71C6	5500
59.7	55	2.7	47.25	H032	71A2	5500
59.3	55	3.8	47.53	H042	71A2	6600

5.1 H/HA MOTORREDUCTORES (50Hz)

0.37 kW

n2 [rpm]	M2 [Nm]	fs	i	Reductor	Motor	Fr2 [N]
57.9	59	3.4	23.83	H032	71B4	5500
57.8	57	1.1	48.75	HA32	71A2	1810
57.8	57	1.5	48.75	HA42	71A2	3810
57.2	57	1.0	48.75	HA32	63C2	1816
57.2	57	1.5	48.75	HA42	63C2	3824
57.0	60	1.4	16.49	HA32	80A6	1819
57.0	60	2.4	16.49	HA42	80A6	3829
56.6	57	4.0	49.80	HA53	71A2	4797
56.2	60	1.4	24.55	HA32	71B4	1827
56.2	60	2.6	24.55	HA42	71B4	3847
56.1	61	3.3	16.77	H032	80A6	5500
56.0	57	3.9	49.80	HA53	63C2	4814
54.9	58	1.3	51.32	HA33	71A2	1841
54.9	58	1.9	51.32	HA43	71A2	3876
54.4	59	1.3	51.32	HA33	63C2	1848
54.4	59	1.9	51.32	HA43	63C2	3890
53.4	64	1.3	16.49	HA32	71C6	1859
53.4	64	2.3	16.49	HA42	71C6	3914
52.6	61	2.5	53.59	H033	71A2	5500
52.5	65	3.1	16.77	H032	71C6	5500
52.3	65	3.1	26.39	H032	71B4	5500
52.1	62	2.4	53.59	H033	63C2	5500
52.0	63	3.3	54.25	H042	71A2	6600
51.6	66	3.2	18.20	H032	80A6	5500
49.5	69	3.8	19.00	H042	80A6	6600
48.4	71	3.0	18.20	H032	71C6	5500
47.3	68	1.1	59.65	HA33	71A2	1936
47.3	68	1.7	59.65	HA43	71A2	4075
47.2	73	2.9	19.90	H032	80A6	5500
46.8	69	1.1	59.65	HA33	63C2	1943
46.8	69	1.6	59.65	HA43	63C2	4090
46.8	68	3.3	60.25	HA53	71A2	5111
46.5	73	2.7	29.70	H032	71B4	5500
46.5	70	1.0	60.67	HA32	71A2	1947
46.5	70	1.4	60.67	HA42	71A2	4098
46.4	74	1.3	20.26	HA32	80A6	1948
46.4	74	2.1	20.26	HA42	80A6	4101
46.3	74	3.5	19.00	H042	71C6	6600
46.3	69	3.3	60.25	HA53	63C2	5129
46.0	71	1.0	60.67	HA32	63C2	1954
46.0	71	1.4	60.67	HA42	63C2	4113
45.6	70	3.2	61.83	H043	71A2	6600
45.3	75	3.7	30.45	H042	71B4	6600
45.2	75	1.1	30.55	HA32	71B4	1965
45.2	75	1.9	30.55	HA42	71B4	4138

5.1 H/HA MOTORREDUCTORES (50Hz)

0.37 kW

n2 [rpm]	M2 [Nm]	fs	i	Reductor	Motor	Fr2 [N]
45.1	71	3.2	61.83	H043	63C2	6600
44.8	77	3.4	21.00	H042	80A6	6600
44.2	77	2.7	19.90	H032	71C6	5500
43.4	79	1.2	20.26	HA32	71C6	1991
43.4	79	2.0	20.26	HA42	71C6	4192
42.2	76	2.0	66.78	H033	71A2	5500
42.0	81	2.5	32.89	H032	71B4	5500
41.9	82	3.2	21.00	H042	71C6	6600
41.8	77	2.0	66.78	H033	63C2	5500
41.4	83	2.5	22.68	H032	80A6	5500
40.6	84	3.2	23.15	H042	80A6	6600
40.5	84	3.3	34.10	H042	71B4	6600
39.4	87	2.4	23.83	H032	80A6	5500
39.0	82	1.4	72.27	HA43	71A2	4300
38.9	87	1.0	35.44	HA32	71B4	2000
38.9	87	1.7	35.44	HA42	71B4	4300
38.8	88	2.4	22.68	H032	71C6	5500
38.6	83	1.4	72.27	HA43	63C2	4300
38.3	89	1.0	24.55	HA32	80A6	2000
38.3	89	1.8	24.55	HA42	80A6	4300
38.0	90	3.0	23.15	H042	71C6	6600
37.7	85	1.8	74.84	H033	71A2	5500
37.7	85	2.6	74.88	HA53	71A2	5495
37.3	86	1.7	74.84	H033	63C2	5500
37.3	86	2.6	74.88	HA53	63C2	5515
37.0	93	3.2	25.43	HA52	80A6	5530
36.9	93	2.3	23.83	H032	71C6	5500
36.8	87	2.6	76.67	H043	71A2	6600
36.5	93	3.0	37.76	H042	71B4	6600
36.4	93	2.1	37.92	H032	71B4	5500
36.4	88	2.6	76.67	H043	63C2	6600
36.1	95	2.9	26.04	H042	80A6	6600
35.9	96	0.9	24.55	HA32	71C6	2000
35.9	96	1.7	24.55	HA42	71C6	4300
35.6	96	2.2	26.39	H032	80A6	5500
34.2	100	2.9	27.50	H042	80A6	6600
33.8	101	2.7	26.04	H042	71C6	6600
33.3	103	2.0	26.39	H032	71C6	5500
33.3	102	2.0	41.40	H032	71B4	5500
32.4	99	2.3	87.05	H043	71A2	6600
32.0	107	2.7	27.50	H042	71C6	6600
32.0	100	2.2	87.05	H043	63C2	6600
32.0	100	2.2	88.02	HA53	71A2	5800
32.0	100	3.6	88.02	HA63	71A2	8000
31.7	101	2.2	88.02	HA53	63C2	5820

5.1 H/HA MOTORREDUCTORES (50Hz)

0.37 kW

n2 [rpm]	M2 [Nm]	fs	i	Reductor	Motor	Fr2 [N]
31.7	101	3.6	88.02	HA63	63C2	8000
31.6	108	1.9	29.70	H032	80A6	5500
31.5	108	2.6	43.75	H042	71B4	6600
31.4	102	1.1	89.94	HA43	71A2	4300
31.4	109	2.9	29.89	HA52	80A6	5836
31.3	108	0.8	44.10	HA32	71B4	2000
31.3	108	1.3	44.10	HA42	71B4	4300
31.2	103	3.6	90.51	H053	71A2	8000
31.0	103	1.1	89.94	HA43	63C2	4300
30.9	111	2.6	30.45	H042	80A6	6600
30.8	104	3.6	90.51	H053	63C2	8000
30.8	111	1.3	30.55	HA42	80A6	4300
29.6	116	1.8	29.70	H032	71C6	5500
29.2	116	1.7	47.25	H032	71B4	5500
29.0	117	2.4	47.53	H042	71B4	6600
28.9	119	2.5	30.45	H042	71C6	6600
28.8	119	1.2	30.55	HA42	71C6	4300
28.6	120	1.8	32.89	H032	80A6	5500
28.4	113	1.3	99.27	H033	71A2	5500
28.3	120	1.0	48.75	HA42	71B4	4300
28.1	114	1.3	99.27	H033	63C2	5500
27.7	120	2.5	49.80	HA53	71B4	6000
27.6	124	2.4	34.10	H042	80A6	6600
26.9	124	0.8	51.32	HA33	71B4	2000
26.9	124	1.2	51.32	HA43	71B4	4300
26.8	128	1.6	32.89	H032	71C6	5500
26.1	123	1.2	108.05	H033	71A2	5500
26.0	132	2.4	36.17	HA52	80A6	6000
26.0	132	3.7	36.17	HA62	80A6	8000
25.9	124	3.0	108.95	H053	71A2	8000
25.8	124	1.2	108.05	H033	63C2	5500
25.8	129	1.6	53.59	H033	71B4	5500
25.8	133	2.2	34.10	H042	71C6	6600
25.6	125	3.0	108.95	H053	63C2	8000
25.4	133	2.1	54.25	H042	71B4	6600
25.3	127	1.8	111.61	HA53	71A2	6000
25.3	127	2.8	111.61	HA63	71A2	8000
25.0	128	1.8	111.61	HA53	63C2	6000
25.0	128	2.8	111.61	HA63	63C2	8000
24.9	138	2.1	37.76	H042	80A6	6600
24.8	138	1.5	37.92	H032	80A6	5500
24.8	138	1.1	35.44	HA42	71C6	4300
24.6	130	1.7	114.55	H043	71A2	6600
24.6	138	3.6	56.11	H052	71B4	8000
24.4	132	1.7	114.55	H043	63C2	6600

5.1 H/HA MOTORREDUCTORES (50Hz)

0.37 kW

n2 [rpm]	M2 [Nm]	fs	i	Reductor	Motor	Fr2 [N]
24.1	142	3.6	38.98	H052	80A6	8000
23.5	142	3.5	58.81	H053	71B4	8000
23.3	147	2.0	37.76	H042	71C6	6600
23.2	148	1.4	37.92	H032	71C6	5500
23.1	144	1.0	59.65	HA43	71B4	4300
22.9	145	2.1	60.25	HA53	71B4	6000
22.9	145	3.3	60.25	HA63	71B4	8000
22.8	141	1.1	123.71	H033	71A2	5500
22.7	151	1.4	41.40	H032	80A6	5500
22.7	149	0.9	60.67	HA42	71B4	4300
22.6	142	1.1	123.71	H033	63C2	5500
22.6	152	3.4	38.98	H052	71C6	8000
22.4	143	1.6	125.69	H043	71A2	6600
22.3	149	2.0	61.83	H043	71B4	6600
22.2	144	1.6	125.69	H043	63C2	6600
21.5	159	1.8	43.75	H042	80A6	6600
21.3	161	1.3	41.40	H032	71C6	5500
20.9	153	2.4	134.76	H053	71A2	8000
20.9	164	1.8	44.95	HA52	80A6	6000
20.9	164	2.8	44.95	HA62	80A6	8000
20.7	161	1.2	66.78	H033	71B4	5500
20.7	165	3.1	45.36	H052	80A6	8000
20.7	155	2.4	134.76	H053	63C2	8000
20.3	158	1.4	138.71	HA53	71A2	6000
20.3	158	2.3	138.71	HA63	71A2	8000
20.1	170	1.7	43.75	H042	71C6	6600
20.1	159	1.4	138.71	HA53	63C2	6000
20.1	159	2.3	138.71	HA63	63C2	8000
20.0	172	0.9	44.10	HA42	71C6	4300
19.9	172	1.2	47.25	H032	80A6	5500
19.9	161	1.4	142.04	H043	71A2	6600
19.8	173	1.7	47.53	H042	80A6	6600
19.6	163	1.4	142.04	H043	63C2	6600
19.4	177	2.9	45.36	H052	71C6	8000
19.1	179	2.9	49.13	H052	80A6	8000
19.1	174	0.9	72.27	HA43	71B4	4300
19.0	175	2.9	72.75	H053	71B4	8000
18.9	170	3.8	149.51	H063	71A2	12000
18.9	181	1.7	49.78	HA52	80A6	6000
18.9	178	1.8	49.80	HA53	80A6	6000
18.9	181	2.1	49.78	HA62	80A6	8000
18.9	178	2.8	49.80	HA63	80A6	8000
18.6	184	1.1	47.25	H032	71C6	5500
18.5	185	1.6	47.53	H042	71C6	6600
18.4	180	1.1	74.84	H033	71B4	5500

5.1 H/HA MOTORREDUCTORES (50Hz)

0.37 kW

n2 [rpm]	M2 [Nm]	fs	i	Reductor	Motor	Fr2 [N]
18.4	180	1.7	74.88	HA53	71B4	6000
18.4	180	2.7	74.88	HA63	71B4	8000
18.0	185	1.6	76.67	H043	71B4	6600
17.9	191	2.7	49.13	H052	71C6	8000
17.9	179	2.1	157.29	H053	71A2	8000
17.7	181	2.1	157.29	H053	63C2	8000
17.7	190	1.7	49.80	HA53	71C6	6000
17.7	190	2.7	49.80	HA63	71C6	8000
17.5	191	1.1	53.59	H033	80A6	5500
17.3	198	1.5	54.25	H042	80A6	6600
17.3	185	1.2	163.05	HA53	71A2	6000
17.3	185	1.9	163.05	HA63	71A2	8000
17.1	188	1.2	165.38	H043	71A2	6600
17.1	196	0.8	51.32	HA43	71C6	4300
17.1	187	1.2	163.05	HA53	63C2	6000
17.1	187	1.9	163.05	HA63	63C2	8000
16.9	190	1.2	165.38	H043	63C2	6600
16.8	205	2.5	56.11	H052	80A6	8000
16.5	194	3.3	170.67	H063	71A2	12000
16.4	204	1.0	53.59	H033	71C6	5500
16.2	211	1.4	54.25	H042	71C6	6600
16.0	210	2.5	58.81	H053	80A6	8000
15.9	210	1.4	87.05	H043	71B4	6600
15.7	218	2.4	56.11	H052	71C6	8000
15.7	212	1.4	88.02	HA53	71B4	6000
15.7	212	2.3	88.02	HA63	71B4	8000
15.6	215	1.5	60.25	HA53	80A6	6000
15.6	215	2.3	60.25	HA63	80A6	8000
15.2	221	1.4	61.83	H043	80A6	6600
15.2	218	2.3	90.51	H053	71B4	8000
15.2	225	1.4	61.87	HA52	80A6	6000
15.2	225	2.0	61.87	HA62	80A6	8000
15.1	212	3.0	186.18	H063	71A2	12000
15.0	224	2.3	58.81	H053	71C6	8000
14.6	228	3.7	94.76	H063	71B4	12000
14.6	230	1.4	60.25	HA53	71C6	6000
14.6	230	2.2	60.25	HA63	71C6	8000
14.5	221	1.7	194.56	H053	71A2	8000
14.3	224	1.7	194.56	H053	63C2	8000
14.2	236	1.3	61.83	H043	71C6	6600
14.1	228	1.6	200.27	HA63	71A2	8000
13.9	230	1.6	200.27	HA63	63C2	8000
13.1	245	2.6	215.21	H063	71A2	12000
13.0	246	1.5	216.38	H053	71A2	8000
12.9	260	2.0	72.75	H053	80A6	8000

5.1 H/HA MOTORREDUCTORES (50Hz)

0.37 kW

n2 [rpm]	M2 [Nm]	fs	i	Reductor	Motor	Fr2 [N]
12.9	249	1.5	216.38	H053	63C2	8000
12.7	262	1.9	108.95	H053	71B4	8000
12.6	267	1.2	74.88	HA53	80A6	6000
12.6	267	1.9	74.88	HA63	80A6	8000
12.4	269	1.1	111.61	HA53	71B4	6000
12.4	269	1.8	111.61	HA63	71B4	8000
12.3	274	1.2	76.67	H043	80A6	6600
12.1	277	1.9	72.75	H053	71C6	8000
12.0	276	1.1	114.55	H043	71B4	6600
12.0	267	2.4	234.67	H063	71A2	12000
12.0	268	1.3	235.41	HA63	71A2	8000
11.9	270	1.3	235.41	HA63	63C2	8000
11.8	285	1.1	74.88	HA53	71C6	6000
11.8	285	1.8	74.88	HA63	71C6	8000
11.7	284	3.0	118.00	H063	71B4	12000
11.5	292	1.1	76.67	H043	71C6	6600
11.0	303	1.0	125.69	H043	71B4	6600
11.0	306	2.9	85.82	H063	80A6	12000
10.8	311	1.0	87.05	H043	80A6	6600
10.7	314	1.0	88.02	HA53	80A6	6000
10.7	314	1.6	88.02	HA63	80A6	8000
10.5	304	1.2	267.65	H053	71A2	8000
10.5	305	2.1	268.00	H063	71A2	12000
10.4	323	1.6	90.51	H053	80A6	8000
10.4	307	1.2	267.65	H053	63C2	8000
10.3	327	2.7	85.82	H063	71C6	12000
10.2	324	1.5	134.76	H053	71B4	8000
10.2	326	2.6	135.40	H063	71B4	12000
10.1	332	0.9	87.05	H043	71C6	6600
10.0	336	0.9	88.02	HA53	71C6	6000
10.0	336	1.5	88.02	HA63	71C6	8000
9.9	338	2.6	94.76	H063	80A6	12000
9.9	334	0.9	138.71	HA53	71B4	6000
9.9	334	1.4	138.71	HA63	71B4	8000
9.9	324	1.1	284.81	HA63	71A2	8000
9.8	327	1.1	284.81	HA63	63C2	8000
9.7	345	1.5	90.51	H053	71C6	8000
9.3	361	2.5	94.76	H063	71C6	12000
9.2	360	2.4	149.51	H063	71B4	12000
8.8	379	1.3	157.29	H053	71B4	8000
8.6	389	1.4	108.95	H053	80A6	8000
8.5	392	0.8	163.05	HA53	71B4	6000
8.5	392	1.2	163.05	HA63	71B4	8000
8.4	398	0.8	111.61	HA53	80A6	6000
8.4	398	1.3	111.61	HA63	80A6	8000

5.1 H/HA MOTORREDUCTORES (50Hz)

0.37 kW

n2 [rpm]	M2 [Nm]	fs	i	Reductor	Motor	Fr2 [N]
8.1	415	1.3	108.95	H053	71C6	8000
8.1	411	2.1	170.67	H063	71B4	12000
8.0	421	2.1	118.00	H063	80A6	12000
7.9	425	0.7	111.61	HA53	71C6	6000
7.9	425	1.2	111.61	HA63	71C6	8000
7.5	450	2.0	118.00	H063	71C6	12000
7.4	448	1.9	186.18	H063	71B4	12000
7.1	468	1.1	194.56	H053	71B4	8000
7.0	481	1.1	134.76	H053	80A6	8000
6.9	483	1.8	135.40	H063	80A6	12000
6.9	482	1.0	200.27	HA63	71B4	8000
6.8	495	1.0	138.71	HA63	80A6	8000
6.6	507	3.7	142.15	H083	80A6	18000
6.5	514	1.0	134.76	H053	71C6	8000
6.5	516	1.7	135.40	H063	71C6	12000
6.4	521	1.0	216.38	H053	71B4	8000
6.4	518	1.6	215.21	H063	71B4	12000
6.3	534	1.7	149.51	H063	80A6	12000
6.3	529	1.0	138.71	HA63	71C6	8000
6.1	552	3.4	154.76	H083	80A6	18000
5.9	570	1.6	149.51	H063	71C6	12000
5.9	565	1.5	234.67	H063	71B4	12000
5.9	567	0.8	235.41	HA63	71B4	8000
5.8	579	3.3	162.35	H083	80A6	18000
5.8	582	0.9	163.05	HA63	80A6	8000
5.5	609	1.5	170.67	H063	80A6	12000
5.4	622	0.8	163.05	HA63	71C6	8000
5.2	651	1.4	170.67	H063	71C6	12000
5.2	639	3.0	179.13	H083	80A6	18000
5.1	645	1.3	268.00	H063	71B4	12000
5.0	664	1.3	186.18	H063	80A6	12000
4.8	696	2.7	195.07	H083	80A6	18000
4.7	710	1.3	186.18	H063	71C6	12000
4.4	768	1.2	215.21	H063	80A6	12000
4.2	795	2.4	222.78	H083	80A6	18000
4.1	820	1.1	215.21	H063	71C6	12000
4.0	837	1.1	234.67	H063	80A6	12000
3.8	895	1.0	234.67	H063	71C6	12000
3.5	956	0.9	268.00	H063	80A6	12000

0.55 kW

n2 [rpm]	M2 [Nm]	fs	i	Reductor	Motor	Fr2 [N]
1102.0	4	3.2	2.55	HA31	71B2	484

5.1 H/HA MOTORREDUCTORES (50Hz)

0.55 kW

n2 [rpm]	M2 [Nm]	fs	i	Reductor	Motor	Fr2 [N]
954.3	5	2.9	2.94	HA31	71B2	508
954.3	5	3.6	2.94	HA41	71B2	514
884.6	6	2.7	3.18	HA31	71B2	521
837.0	6	2.6	3.36	HA31	71B2	531
726.7	7	2.3	3.87	HA31	71B2	556
700.0	7	3.4	2.00	H041	80A4	761
685.0	7	3.4	2.00	H041	71C4	766
666.8	7	2.1	4.21	HA31	71B2	573
647.0	8	3.3	1.44	H041	80B6	778
642.1	8	3.3	1.45	HA41	80B6	586
591.6	8	2.0	4.75	HA31	71B2	596
591.6	8	2.7	4.75	HA41	71B2	603
562.0	9	3.9	5.00	H041	71B2	814
551.0	9	1.9	5.10	HA31	71B2	610
550.0	9	3.2	2.55	H041	80A4	817
549.0	9	2.0	2.55	HA31	80A4	611
538.2	9	3.2	2.55	H041	71C4	822
537.3	9	2.0	2.55	HA31	71C4	615
515.8	10	3.0	2.71	H041	80A4	833
515.2	10	1.8	5.45	HA31	71B2	624
515.2	10	2.4	5.45	HA41	71B2	631
515.2	10	3.9	5.45	HA51	71B2	1739
510.9	10	3.9	5.50	H041	71B2	837
504.7	10	3.0	2.71	H041	71C4	838
475.5	11	1.9	2.94	HA31	80A4	641
475.5	11	2.3	2.94	HA41	80A4	648
475.5	11	3.7	2.94	HA51	80A4	1786
465.3	11	1.8	2.94	HA31	71C4	646
465.3	11	2.3	2.94	HA41	71C4	653
465.3	11	3.7	2.94	HA51	71C4	1799
465.0	11	2.4	2.00	H041	80B6	858
461.3	11	3.5	6.09	H041	71B2	862
450.8	11	3.5	3.11	H041	80A4	866
446.0	11	1.6	6.30	HA31	71B2	655
441.2	12	3.5	3.11	H041	71C4	872
440.7	12	1.7	3.18	HA31	80A4	657
431.3	12	1.7	3.18	HA31	71C4	662
417.0	12	1.6	3.36	HA31	80A4	670
408.1	12	1.6	3.36	HA31	71C4	674
390.2	13	3.4	3.59	H041	80A4	903
381.8	13	3.4	3.59	H041	71C4	908
366.5	13	2.8	7.67	H041	71B2	921
365.4	14	2.2	2.55	H041	80B6	919
364.7	14	1.4	2.55	HA31	80B6	700
362.1	14	1.5	3.87	HA31	80A4	702

5.1 H/HA MOTORREDUCTORES (50Hz)

0.55 kW

n2 [rpm]	M2 [Nm]	fs	i	Reductor	Motor	Fr2 [N]
356.8	14	1.2	7.88	HA31	71B2	705
356.8	14	1.4	7.88	HA41	71B2	713
356.8	14	2.2	7.88	HA51	71B2	1965
354.3	14	1.5	3.87	HA31	71C4	707
342.6	15	2.1	2.71	H041	80B6	936
333.3	15	2.9	4.20	H041	80A4	944
332.2	15	1.4	4.21	HA31	80A4	722
326.2	16	2.9	4.20	H041	71C4	950
325.1	16	1.3	4.21	HA31	71C4	728
321.1	15	2.7	8.75	H041	71B2	956
315.8	16	1.3	2.94	HA31	80B6	735
315.8	16	1.6	2.94	HA41	80B6	743
315.8	16	2.6	2.94	HA51	80B6	2047
299.5	17	2.4	3.11	H041	80B6	972
294.7	17	1.3	4.75	HA31	80A4	752
294.7	17	1.7	4.75	HA41	80A4	760
294.7	17	2.9	4.75	HA51	80A4	2095
292.8	18	1.2	3.18	HA31	80B6	753
288.4	18	1.2	4.75	HA31	71C4	757
288.4	18	1.7	4.75	HA41	71C4	766
288.4	18	2.8	4.75	HA51	71C4	2110
280.0	18	2.5	5.00	H041	80A4	990
277.0	19	1.1	3.36	HA31	80B6	767
274.0	19	2.4	5.00	H041	71C4	996
268.6	19	1.2	5.10	HA31	71C4	775
259.2	20	2.4	3.59	H041	80B6	1000
256.9	19	3.6	10.94	HA32	71B2	1101
256.7	20	1.5	5.45	HA41	80A4	796
256.7	20	2.5	5.45	HA51	80A4	2194
254.5	20	2.5	5.50	H041	80A4	1000
251.2	20	1.1	5.45	HA31	71C4	793
251.2	20	1.5	5.45	HA41	71C4	802
251.2	20	2.5	5.45	HA51	71C4	2209
249.1	20	2.4	5.50	H041	71C4	1000
240.5	21	1.0	3.87	HA31	80B6	804
229.9	22	2.3	6.09	H041	80A4	1000
224.9	23	2.2	6.09	H041	71C4	1000
221.4	23	2.0	4.20	H041	80B6	1000
220.7	23	0.9	4.21	HA31	80B6	828
217.5	23	1.0	6.30	HA31	71C4	832
214.8	23	3.4	6.52	HA32	80A4	1169
212.1	23	2.6	13.25	HA32	71B2	1174
210.2	24	3.3	6.52	HA32	71C4	1177
198.0	26	3.9	4.70	H032	80B6	4321
195.8	26	0.9	4.75	HA31	80B6	862

5.1 H/HA MOTORREDUCTORES (50Hz)

0.55 kW

n2 [rpm]	M2 [Nm]	fs	i	Reductor	Motor	Fr2 [N]
195.8	26	1.2	4.75	HA41	80B6	871
195.8	26	2.0	4.75	HA51	80B6	2401
195.0	26	3.8	4.77	H051	80B6	2500
190.9	27	3.7	7.33	H051	80A4	2500
186.8	27	3.7	7.33	H051	71C4	2500
186.0	28	1.7	5.00	H041	80B6	1000
182.6	28	1.8	7.67	H041	80A4	1000
180.6	28	3.2	7.75	HA61	80A4	3691
178.7	29	1.8	7.67	H041	71C4	1000
177.1	29	3.6	5.25	H051	80B6	2500
174.0	29	0.9	7.88	HA41	71C4	906
174.0	29	1.4	7.88	HA51	71C4	2497
172.9	29	2.9	5.38	HA32	80B6	1256
172.6	29	2.6	8.11	HA32	80A4	1257
170.5	30	1.0	5.45	HA41	80B6	912
170.5	30	1.7	5.45	HA51	80B6	2514
170.4	29	2.1	16.49	HA32	71B2	1263
170.4	29	3.7	16.49	HA42	71B2	2658
169.1	30	1.7	5.50	H041	80B6	1000
168.9	30	2.5	8.11	HA32	71C4	1266
167.2	30	3.3	8.38	H051	80A4	2500
163.6	31	3.2	8.38	H051	71C4	2500
160.0	32	1.7	8.75	H041	80A4	1000
159.8	32	3.3	5.82	H051	80B6	2500
156.6	33	1.7	8.75	H041	71C4	1000
154.5	33	4.0	8.87	H032	71C4	4641
152.7	34	1.6	6.09	H041	80B6	1000
149.3	34	3.2	6.23	H032	80B6	4682
142.7	36	2.4	6.52	HA32	80B6	1339
138.7	35	1.9	20.26	HA32	71B2	1352
138.7	35	3.2	20.26	HA42	71B2	2847
138.0	37	3.8	10.14	H032	80A4	4789
135.1	37	3.7	10.14	H032	71C4	4818
131.3	39	1.8	10.67	HA61	80A4	4106
128.0	39	2.3	10.94	HA32	80A4	1389
128.0	39	3.8	10.94	HA42	80A4	2924
126.8	41	2.6	7.33	H051	80B6	2500
125.3	40	2.2	10.94	HA32	71C4	1399
125.3	40	3.7	10.94	HA42	71C4	2945
123.9	39	3.8	22.68	H032	71B2	4948
121.3	42	1.2	7.67	H041	80B6	1000
120.0	43	2.2	7.75	HA61	80B6	4230
119.8	43	3.1	7.76	H032	80B6	4974
119.0	42	3.4	11.76	H032	80A4	4987
117.9	41	3.6	23.83	H032	71B2	5016

5.1 H/HA MOTORREDUCTORES (50Hz)

0.55 kW

n2 [rpm]	M2 [Nm]	fs	i	Reductor	Motor	Fr2 [N]
116.5	43	3.3	11.76	H032	71C4	5016
114.7	44	1.8	8.11	HA32	80B6	1441
114.7	44	3.1	8.11	HA42	80B6	3033
114.5	43	1.5	24.55	HA32	71B2	1442
114.5	43	2.7	24.55	HA42	71B2	3035
111.0	46	2.3	8.38	H051	80B6	2500
111.0	46	3.9	8.38	H061	80B6	3700
106.5	46	3.3	26.39	H032	71B2	5156
106.3	48	1.2	8.75	H041	80B6	1000
105.7	48	1.7	13.25	HA32	80A4	1481
105.7	48	2.9	13.25	HA42	80A4	3117
104.9	49	2.8	8.87	H032	80B6	5154
103.4	49	1.6	13.25	HA32	71C4	1491
103.4	49	2.9	13.25	HA42	71C4	3140
102.0	49	3.4	13.72	H032	80A4	5197
99.9	50	3.4	13.72	H032	71C4	5226
95.5	53	3.2	14.66	H032	80A4	5288
94.6	51	2.9	29.70	H032	71B2	5320
93.5	54	3.2	14.66	H032	71C4	5317
92.3	53	4.0	30.45	H042	71B2	6600
92.0	53	1.1	30.55	HA32	71B2	1551
92.0	53	2.0	30.55	HA42	71B2	3264
91.7	56	2.6	10.14	H032	80B6	5338
87.2	59	1.2	10.67	HA61	80B6	4500
85.4	57	2.6	32.89	H032	71B2	5463
85.0	60	1.6	10.94	HA32	80B6	1592
85.0	60	2.6	10.94	HA42	80B6	3351
84.9	59	1.3	16.49	HA32	80A4	1593
84.9	59	2.4	16.49	HA42	80A4	3353
83.5	60	3.1	16.77	H032	80A4	5474
83.1	61	1.3	16.49	HA32	71C4	1604
83.1	61	2.3	16.49	HA42	71C4	3377
82.4	59	3.6	34.10	H042	71B2	6600
81.7	62	3.1	16.77	H032	71C4	5500
79.3	61	1.1	35.44	HA32	71B2	1629
79.3	61	1.8	35.44	HA42	71B2	3430
79.1	64	2.4	11.76	H032	80B6	5500
76.9	66	3.1	18.20	H032	80A4	5500
75.3	67	3.0	18.20	H032	71C4	5500
74.4	65	3.2	37.76	H042	71B2	6600
74.1	66	2.3	37.92	H032	71B2	5500
73.7	68	3.7	19.00	H042	80A4	6600
72.1	70	3.6	19.00	H042	71C4	6600
70.4	72	2.8	19.90	H032	80A4	5500
70.2	73	1.2	13.25	HA32	80B6	1697

5.1 H/HA MOTORREDUCTORES (50Hz)

0.55 kW

n2 [rpm]	M2 [Nm]	fs	i	Reductor	Motor	Fr2 [N]
70.2	73	2.0	13.25	HA42	80B6	3572
69.1	73	1.2	20.26	HA32	80A4	1706
69.1	73	2.1	20.26	HA42	80A4	3591
68.9	73	2.7	19.90	H032	71C4	5500
68.5	74	3.5	13.57	H042	80B6	6600
68.4	74	3.9	20.46	HA52	80A4	4504
67.9	72	2.1	41.40	H032	71B2	5500
67.8	75	2.4	13.72	H032	80B6	5500
67.6	75	1.2	20.26	HA32	71C4	1718
67.6	75	2.0	20.26	HA42	71C4	3617
66.7	76	3.3	21.00	H042	80A4	6600
65.2	77	3.2	21.00	H042	71C4	6600
64.2	76	2.8	43.75	H042	71B2	6600
64.1	79	3.7	14.50	HA52	80B6	4602
63.7	76	1.4	44.10	HA42	71B2	3689
63.5	80	2.2	14.66	H032	80B6	5500
61.7	82	2.4	22.68	H032	80A4	5500
60.5	83	3.1	23.15	H042	80A4	6600
60.4	83	2.4	22.68	H032	71C4	5500
59.5	82	1.8	47.25	H032	71B2	5500
59.2	85	3.1	23.15	H042	71C4	6600
59.1	82	2.6	47.53	H042	71B2	6600
58.7	86	2.3	23.83	H032	80A4	5500
58.3	87	3.0	15.96	H042	80B6	6600
57.6	84	1.0	48.75	HA42	71B2	3815
57.5	88	2.3	23.83	H032	71C4	5500
57.0	88	1.0	24.55	HA32	80A4	1818
57.0	88	1.8	24.55	HA42	80A4	3828
56.4	90	0.9	16.49	HA32	80B6	1825
56.4	90	1.6	16.49	HA42	80B6	3843
56.4	84	2.7	49.80	HA53	71B2	4802
55.8	90	0.9	24.55	HA32	71C4	1832
55.8	90	1.7	24.55	HA42	71C4	3856
55.5	92	2.2	16.77	H032	80B6	5500
55.1	92	3.1	25.43	HA52	80A4	4842
55.0	93	3.4	16.91	HA52	80B6	4844
54.8	87	1.3	51.32	HA43	71B2	3881
53.8	94	2.8	26.04	H042	80A4	6600
53.0	95	2.1	26.39	H032	80A4	5500
52.6	96	2.7	26.04	H042	71C4	6600
52.4	91	1.7	53.59	H033	71B2	5500
51.9	97	2.1	26.39	H032	71C4	5500
51.8	94	2.2	54.25	H042	71B2	6600
51.1	100	2.1	18.20	H032	80B6	5500
50.9	99	2.8	27.50	H042	80A4	6600

5.1 H/HA MOTORREDUCTORES (50Hz)

0.55 kW

n2 [rpm]	M2 [Nm]	fs	i	Reductor	Motor	Fr2 [N]
50.1	97	3.8	56.11	H052	71B2	8000
49.8	101	2.8	27.50	H042	71C4	6600
48.9	104	2.5	19.00	H042	80B6	6600
47.8	100	3.8	58.81	H053	71B2	8000
47.1	107	1.9	29.70	H032	80A4	5500
47.1	101	1.1	59.65	HA43	71B2	4080
46.8	108	2.8	29.89	HA52	80A4	5110
46.7	109	1.9	19.90	H032	80B6	5500
46.6	102	2.2	60.25	HA53	71B2	5117
46.6	102	3.5	60.25	HA63	71B2	7553
46.1	109	1.8	29.70	H032	71C4	5500
46.0	110	2.6	30.45	H042	80A4	6600
45.9	111	0.9	20.26	HA32	80B6	1955
45.9	111	1.4	20.26	HA42	80B6	4116
45.8	110	1.3	30.55	HA42	80A4	4118
45.5	112	2.7	20.46	HA52	80B6	5162
45.4	105	2.1	61.83	H043	71B2	6600
45.0	112	2.5	30.45	H042	71C4	6600
44.9	112	1.2	30.55	HA42	71C4	4148
44.3	115	2.3	21.00	H042	80B6	6600
42.6	118	1.7	32.89	H032	80A4	5500
42.1	113	1.3	66.78	H033	71B2	5500
41.7	121	1.7	32.89	H032	71C4	5500
41.1	123	2.3	34.10	H042	80A4	6600
41.0	124	1.7	22.68	H032	80B6	5500
40.2	127	2.2	23.15	H042	80B6	6600
40.2	126	2.2	34.10	H042	71C4	6600
39.0	131	1.6	23.83	H032	80B6	5500
38.7	130	1.2	35.44	HA42	71C4	4300
38.7	130	2.3	36.17	HA52	80A4	5445
38.7	130	3.6	36.17	HA62	80A4	8000
38.6	123	3.0	72.75	H053	71B2	8000
37.9	134	1.2	24.55	HA42	80B6	4300
37.6	135	3.6	24.71	H052	80B6	8000
37.5	127	1.2	74.84	H033	71B2	5500
37.5	127	1.8	74.88	HA53	71B2	5502
37.5	127	2.8	74.88	HA63	71B2	8000
37.1	136	2.1	37.76	H042	80A4	6600
36.9	137	1.5	37.92	H032	80A4	5500
36.6	130	1.7	76.67	H043	71B2	6600
36.6	139	2.1	25.43	HA52	80B6	5549
36.6	139	3.2	25.43	HA62	80B6	8000
36.3	139	2.0	37.76	H042	71C4	6600
36.1	140	1.4	37.92	H032	71C4	5500
35.9	140	3.5	38.98	H052	80A4	8000

5.1 H/HA MOTORREDUCTORES (50Hz)

0.55 kW

n2 [rpm]	M2 [Nm]	fs	i	Reductor	Motor	Fr2 [N]
35.7	143	1.9	26.04	H042	80B6	6600
35.5	143	3.6	26.18	H052	80B6	8000
35.2	145	1.5	26.39	H032	80B6	5500
35.1	143	3.4	38.98	H052	71C4	8000
33.8	149	1.3	41.40	H032	80A4	5500
33.8	151	2.0	27.50	H042	80B6	6600
33.1	152	1.3	41.40	H032	71C4	5500
32.7	156	3.3	28.44	H052	80B6	8000
32.3	148	1.5	87.05	H043	71B2	6600
32.0	158	1.8	43.75	H042	80A4	6600
31.9	149	1.5	88.02	HA53	71B2	5807
31.9	149	2.4	88.02	HA63	71B2	8000
31.3	163	1.3	29.70	H032	80B6	5500
31.3	161	1.7	43.75	H042	71C4	6600
31.1	162	0.9	44.10	HA42	71C4	4300
31.1	164	1.9	29.89	HA52	80B6	5857
31.1	162	1.7	44.95	HA52	80A4	5855
31.1	164	2.9	29.89	HA62	80B6	8000
31.1	162	2.7	44.95	HA62	80A4	8000
31.0	153	2.4	90.51	H053	71B2	8000
30.9	163	3.0	45.36	H052	80A4	8000
30.5	167	1.8	30.45	H042	80B6	6600
30.4	167	0.9	30.55	HA42	80B6	4300
30.2	167	2.9	45.36	H052	71C4	8000
29.7	161	4.0	94.76	H063	71B2	12000
29.6	170	1.2	47.25	H032	80A4	5500
29.5	171	1.6	47.53	H042	80A4	6600
29.5	173	3.0	31.52	H052	80B6	8000
29.0	174	1.2	47.25	H032	71C4	5500
28.8	175	1.6	47.53	H042	71C4	6600
28.5	177	2.8	49.13	H052	80A4	8000
28.3	180	1.2	32.89	H032	80B6	5500
28.2	181	2.8	33.00	H052	80B6	8000
28.1	179	1.7	49.78	HA52	80A4	6000
28.1	176	1.7	49.80	HA53	80A4	6000
28.1	179	2.1	49.78	HA62	80A4	8000
28.1	176	2.7	49.80	HA63	80A4	8000
27.9	181	2.7	49.13	H052	71C4	8000
27.5	179	1.7	49.80	HA53	71C4	6000
27.5	179	2.7	49.80	HA63	71C4	8000
27.3	187	1.6	34.10	H042	80B6	6600
26.7	185	0.8	51.32	HA43	71C4	4300
26.1	189	1.1	53.59	H033	80A4	5500
25.8	195	1.4	54.25	H042	80A4	6600
25.8	185	2.0	108.95	H053	71B2	8000

5.1 H/HA MOTORREDUCTORES (50Hz)

0.55 kW

n2 [rpm]	M2 [Nm]	fs	i	Reductor	Motor	Fr2 [N]
25.7	198	1.6	36.17	HA52	80B6	6000
25.7	198	2.5	36.17	HA62	80B6	8000
25.6	193	1.0	53.59	H033	71C4	5500
25.3	200	1.4	54.25	H042	71C4	6600
25.2	189	1.2	111.61	HA53	71B2	6000
25.2	189	1.9	111.61	HA63	71B2	8000
24.9	202	2.4	56.11	H052	80A4	8000
24.6	207	1.4	37.76	H042	80B6	6600
24.5	208	1.0	37.92	H032	80B6	5500
24.5	194	1.2	114.55	H043	71B2	6600
24.4	207	2.4	56.11	H052	71C4	8000
23.9	213	2.4	38.98	H052	80B6	8000
23.8	207	2.4	58.81	H053	80A4	8000
23.8	200	3.2	118.00	H063	71B2	12000
23.3	212	2.4	58.81	H053	71C4	8000
23.2	212	1.4	60.25	HA53	80A4	6000
23.2	212	2.3	60.25	HA63	80A4	8000
22.7	217	1.4	60.25	HA53	71C4	6000
22.7	217	2.2	60.25	HA63	71C4	8000
22.6	218	1.4	61.83	H043	80A4	6600
22.6	223	1.3	61.87	HA52	80A4	6000
22.6	223	2.0	61.87	HA62	80A4	8000
22.5	227	0.9	41.40	H032	80B6	5500
22.4	213	1.1	125.69	H043	71B2	6600
22.2	223	1.3	61.83	H043	71C4	6600
21.3	240	1.2	43.75	H042	80B6	6600
20.9	228	1.6	134.76	H053	71B2	8000
20.8	230	2.8	135.40	H063	71B2	12000
20.7	246	1.2	44.95	HA52	80B6	6000
20.7	246	1.9	44.95	HA62	80B6	8000
20.5	248	2.1	45.36	H052	80B6	8000
20.3	235	1.5	138.71	HA63	71B2	8000
20.2	252	3.5	46.06	H062	80B6	12000
19.6	260	1.1	47.53	H042	80B6	6600
19.2	257	1.9	72.75	H053	80A4	8000
18.9	269	1.9	49.13	H052	80B6	8000
18.8	262	1.9	72.75	H053	71C4	8000
18.8	254	2.5	149.51	H063	71B2	12000
18.7	273	1.2	49.78	HA52	80B6	6000
18.7	267	1.2	49.80	HA53	80B6	6000
18.7	264	1.1	74.88	HA53	80A4	6000
18.7	273	1.4	49.78	HA62	80B6	8000
18.7	267	1.9	49.80	HA63	80B6	8000
18.7	264	1.8	74.88	HA63	80A4	8000
18.3	270	1.1	76.67	H043	80A4	6600

5.1 H/HA MOTORREDUCTORES (50Hz)

0.55 kW

n2 [rpm]	M2 [Nm]	fs	i	Reductor	Motor	Fr2 [N]
18.3	270	1.1	74.88	HA53	71C4	6000
18.3	270	1.8	74.88	HA63	71C4	8000
17.9	276	1.1	76.67	H043	71C4	6600
17.9	267	1.4	157.29	H053	71B2	8000
17.2	276	0.8	163.05	HA53	71B2	6000
17.2	276	1.3	163.05	HA63	71B2	8000
17.1	297	1.0	54.25	H042	80B6	6600
16.6	307	1.7	56.11	H052	80B6	8000
16.5	289	2.2	170.67	H063	71B2	12000
16.3	303	2.8	85.82	H063	80A4	12000
16.1	307	1.0	87.05	H043	80A4	6600
16.0	309	2.7	85.82	H063	71C4	12000
15.9	310	1.0	88.02	HA53	80A4	6000
15.9	310	1.5	88.02	HA63	80A4	8000
15.8	315	1.7	58.81	H053	80B6	8000
15.7	314	1.0	87.05	H043	71C4	6600
15.6	317	0.9	88.02	HA53	71C4	6000
15.6	317	1.5	88.02	HA63	71C4	8000
15.5	319	1.6	90.51	H053	80A4	8000
15.4	323	1.0	60.25	HA53	80B6	6000
15.4	323	1.6	60.25	HA63	80B6	8000
15.1	326	1.5	90.51	H053	71C4	8000
15.1	316	2.0	186.18	H063	71B2	12000
15.0	332	1.0	61.83	H043	80B6	6600
15.0	339	0.9	61.87	HA52	80B6	6000
15.0	339	1.4	61.87	HA62	80B6	8000
14.8	334	2.5	94.76	H063	80A4	12000
14.5	341	2.5	94.76	H063	71C4	12000
14.4	330	1.1	194.56	H053	71B2	8000
14.0	340	1.1	200.27	HA63	71B2	8000
13.1	365	1.7	215.21	H063	71B2	12000
13.0	367	1.0	216.38	H053	71B2	8000
12.9	384	1.3	108.95	H053	80A4	8000
12.8	390	1.3	72.75	H053	80B6	8000
12.6	393	1.3	108.95	H053	71C4	8000
12.5	394	0.8	111.61	HA53	80A4	6000
12.5	394	1.2	111.61	HA63	80A4	8000
12.4	402	1.3	74.88	HA63	80B6	8000
12.3	402	0.7	111.61	HA53	71C4	6000
12.3	402	1.2	111.61	HA63	71C4	8000
12.0	398	1.6	234.67	H063	71B2	12000
11.9	416	2.0	118.00	H063	80A4	12000
11.9	399	0.9	235.41	HA63	71B2	8000
11.6	425	2.0	118.00	H063	71C4	12000
10.8	460	1.9	85.82	H063	80B6	12000

5.1 H/HA MOTORREDUCTORES (50Hz)

0.55 kW

n2 [rpm]	M2 [Nm]	fs	i	Reductor	Motor	Fr2 [N]
10.6	472	1.1	88.02	HA63	80B6	8000
10.5	454	1.4	268.00	H063	71B2	12000
10.4	475	1.1	134.76	H053	80A4	8000
10.3	485	1.1	90.51	H053	80B6	8000
10.3	478	1.8	135.40	H063	80A4	12000
10.2	486	1.0	134.76	H053	71C4	8000
10.1	488	1.7	135.40	H063	71C4	12000
10.1	489	1.0	138.71	HA63	80A4	8000
9.9	500	1.0	138.71	HA63	71C4	8000
9.8	508	1.8	94.76	H063	80B6	12000
9.8	501	3.6	142.15	H083	80A4	18000
9.5	526	3.6	98.09	H083	80B6	18000
9.4	527	1.6	149.51	H063	80A4	12000
9.2	539	1.6	149.51	H063	71C4	12000
9.0	546	3.3	154.76	H083	80A4	18000
8.6	573	3.1	162.35	H083	80A4	18000
8.6	575	0.8	163.05	HA63	80A4	8000
8.4	588	0.8	163.05	HA63	71C4	8000
8.3	598	0.8	111.61	HA63	80B6	8000
8.2	602	1.4	170.67	H063	80A4	12000
8.2	605	3.1	112.78	H083	80B6	18000
8.0	615	1.4	170.67	H063	71C4	12000
7.9	633	1.4	118.00	H063	80B6	12000
7.8	632	2.8	179.13	H083	80A4	18000
7.5	657	1.3	186.18	H063	80A4	12000
7.5	667	2.8	124.44	H083	80B6	18000
7.4	671	1.3	186.18	H063	71C4	12000
7.2	688	2.6	195.07	H083	80A4	18000
6.9	726	1.2	135.40	H063	80B6	12000
6.5	759	1.1	215.21	H063	80A4	12000
6.5	762	2.5	142.15	H083	80B6	18000
6.4	776	1.1	215.21	H063	71C4	12000
6.3	786	2.3	222.78	H083	80A4	18000
6.2	802	1.1	149.51	H063	80B6	12000
6.0	828	1.0	234.67	H063	80A4	12000
6.0	830	2.3	154.76	H083	80B6	18000
5.8	846	1.0	234.67	H063	71C4	12000
5.7	871	2.2	162.35	H083	80B6	18000
5.4	915	1.0	170.67	H063	80B6	12000
5.2	961	2.0	179.13	H083	80B6	18000
4.8	1046	1.8	195.07	H083	80B6	18000
4.2	1195	1.6	222.78	H083	80B6	18000

5.1 H/HA MOTORREDUCTORES (50Hz)

0.75 kW

n2 [rpm]	M2 [Nm]	fs	i	Reductor	Motor	Fr2 [N]
1420.0	5	4.0	2.00	H041	80A2	607
1400.0	5	3.9	2.00	H041	71C2	610
1115.7	6	3.7	2.55	H041	80A2	653
1113.7	6	2.4	2.55	HA31	80A2	483
1100.0	6	3.7	2.55	H041	71C2	656
1098.0	6	2.3	2.55	HA31	71C2	485
1046.3	6	3.5	2.71	H041	80A2	666
1031.6	6	3.5	2.71	H041	71C2	669
994.8	7	3.6	1.44	H041	80B4	675
987.4	7	3.6	1.45	HA41	80B4	508
964.5	7	2.2	2.94	HA31	80A2	506
964.5	7	2.7	2.94	HA41	80A2	512
950.9	7	2.1	2.94	HA31	71C2	509
950.9	7	2.7	2.94	HA41	71C2	514
884.6	8	2.0	3.18	HA31	80A2	521
881.5	8	2.0	3.18	HA31	71C2	522
846.0	8	1.9	3.36	HA31	80A2	529
834.0	8	1.9	3.36	HA31	71C2	531
783.1	9	3.9	3.59	H041	80A2	726
780.3	9	3.9	3.59	H041	71C2	727
734.5	9	1.7	3.87	HA31	80A2	554
724.1	9	1.7	3.87	HA31	71C2	557
715.0	10	2.6	2.00	H041	80B4	744
676.2	10	3.4	4.20	H041	80A2	758
673.9	10	1.6	4.21	HA31	80A2	571
666.7	10	3.4	4.20	H041	71C2	761
664.4	10	1.6	4.21	HA31	71C2	573
653.9	11	2.4	1.44	H041	90S6	763
649.0	11	3.9	1.45	HA51	90S6	1610
640.0	11	2.4	1.44	H041	80C6	767
635.2	11	2.4	1.45	HA41	80C6	588
635.2	11	3.8	1.45	HA51	80C6	1622
597.9	11	1.5	4.75	HA31	80A2	594
597.9	11	2.0	4.75	HA41	80A2	601
597.9	11	3.3	4.75	HA51	80A2	1655
589.5	11	1.5	4.75	HA31	71C2	597
589.5	11	2.0	4.75	HA41	71C2	603
589.5	11	3.3	4.75	HA51	71C2	1663
568.0	12	2.9	5.00	H041	80A2	796
560.0	12	2.8	5.00	H041	71C2	800
550.0	13	2.4	2.55	H041	80B4	802
549.0	13	1.5	2.55	HA31	80B4	611
549.0	12	1.4	5.10	HA31	71C2	611
526.8	13	2.3	2.71	H041	80B4	811
520.7	13	1.7	5.45	HA41	80A2	629

5.1 H/HA MOTORREDUCTORES (50Hz)

0.75 kW

n2 [rpm]	M2 [Nm]	fs	i	Reductor	Motor	Fr2 [N]
520.7	13	2.9	5.45	HA51	80A2	1733
516.4	13	2.9	5.50	H041	80A2	818
513.3	13	1.3	5.45	HA31	71C2	625
513.3	13	1.7	5.45	HA41	71C2	632
513.3	13	2.9	5.45	HA51	71C2	1741
509.1	13	2.8	5.50	H041	71C2	821
475.5	15	1.4	2.94	HA31	80B4	641
475.5	15	1.7	2.94	HA41	80B4	648
475.5	15	2.7	2.94	HA51	80B4	1786
470.0	15	1.8	2.00	H041	90S6	837
461.3	15	2.6	6.09	H041	80A2	844
460.5	15	2.7	3.11	H041	80B4	842
460.0	15	1.7	2.00	H041	80C6	842
459.7	15	2.6	6.09	H041	71C2	845
444.4	15	1.1	6.30	HA31	71C2	656
442.4	16	4.0	2.13	H051	90S6	2181
440.7	16	1.3	3.18	HA31	80B4	657
435.8	15	3.9	6.52	HA32	80A2	923
432.9	16	3.9	2.13	H051	80C6	2195
429.6	15	3.9	6.52	HA32	71C2	928
417.0	17	1.2	3.36	HA31	80B4	670
390.2	18	2.5	3.59	H041	80B4	881
370.4	18	2.1	7.67	H041	80A2	896
369.8	19	1.1	3.87	HA31	80B4	697
369.3	19	1.7	2.55	H041	90S6	893
366.5	18	3.7	7.75	HA61	80A2	2916
365.2	18	2.0	7.67	H041	71C2	899
361.4	19	1.6	2.55	H041	80C6	898
360.8	19	1.0	2.55	HA31	80C6	703
357.8	20	3.7	2.57	H051	80C6	2328
357.8	20	3.7	2.57	H051	90S6	2328
355.6	19	1.6	7.88	HA51	71C2	1968
350.2	19	3.0	8.11	HA32	80A2	993
345.2	19	2.9	8.11	HA32	71C2	998
339.1	20	3.8	8.38	H051	80A2	2370
338.9	21	1.5	2.71	H041	80C6	913
338.9	21	1.5	2.71	H041	90S6	913
334.3	20	3.7	8.38	H051	71C2	2380
333.3	21	2.2	4.20	H041	80B4	918
332.2	21	1.0	4.21	HA31	80B4	722
324.6	21	2.0	8.75	H041	80A2	928
320.0	21	2.0	8.75	H041	71C2	931
319.2	22	1.9	2.94	HA51	90S6	2040
312.5	22	0.9	2.94	HA31	80C6	737
312.5	22	1.2	2.94	HA41	80C6	746

5.1 H/HA MOTORREDUCTORES (50Hz)

0.75 kW

n2 [rpm]	M2 [Nm]	fs	i	Reductor	Motor	Fr2 [N]
312.5	22	1.9	2.94	HA51	80C6	2054
296.8	24	3.6	3.17	H051	90S6	2463
296.3	24	1.8	3.11	H041	80C6	945
296.3	24	1.8	3.11	H041	90S6	945
294.7	24	0.9	4.75	HA31	80B4	752
294.7	24	1.3	4.75	HA41	80B4	760
294.7	24	2.1	4.75	HA51	80B4	2095
290.5	24	3.5	3.17	H051	80C6	2480
289.6	24	0.9	3.18	HA31	80C6	756
280.0	25	1.8	5.00	H041	80B4	960
274.0	26	0.8	3.36	HA31	80C6	770
272.4	26	3.9	5.25	H051	80B4	2500
266.3	25	2.1	10.67	HA61	80A2	3243
265.8	26	3.1	5.38	HA32	80B4	1089
262.2	27	1.1	5.45	HA41	80B4	790
262.2	27	1.9	5.45	HA51	80B4	2178
262.0	27	1.8	3.59	H041	90S6	974
260.0	27	1.9	5.50	H041	80B4	977
259.7	26	2.6	10.94	HA32	80A2	1097
256.4	27	1.7	3.59	H041	80C6	980
256.0	26	2.6	10.94	HA32	71C2	1102
254.9	28	3.4	3.69	H051	90S6	2500
249.5	28	3.4	3.69	H051	80C6	2500
240.6	29	3.5	5.82	H051	80B4	2500
238.9	28	3.9	11.76	H032	80A2	4024
238.1	28	3.9	11.76	H032	71C2	4028
234.8	30	1.7	6.09	H041	80B4	1000
230.0	31	3.1	4.00	H051	80C6	2500
230.0	31	3.1	4.00	H051	90S6	2500
224.7	31	3.4	6.23	H032	80B4	4083
219.0	32	1.5	4.20	H041	80C6	1000
219.0	32	1.5	4.20	H041	90S6	1000
214.8	32	2.5	6.52	HA32	80B4	1169
214.4	33	3.5	4.38	HA61	90S6	3486
214.3	31	1.9	13.25	HA32	80A2	1170
214.3	31	3.4	13.25	HA42	80A2	2462
211.3	31	1.9	13.25	HA32	71C2	1175
211.3	31	3.3	13.25	HA42	71C2	2474
209.8	33	3.5	4.38	HA61	80C6	3511
207.0	32	4.0	13.72	H032	80A2	4188
204.1	33	3.9	13.72	H032	71C2	4205
200.2	35	2.9	4.70	H032	90S6	4211
197.1	36	2.8	4.77	H051	90S6	2500
195.9	35	2.8	4.70	H032	80C6	4236
195.0	36	2.8	7.33	H051	80B4	2500

5.1 H/HA MOTORREDUCTORES (50Hz)

0.75 kW

n2 [rpm]	M2 [Nm]	fs	i	Reductor	Motor	Fr2 [N]
193.7	36	0.9	4.75	HA41	80C6	874
193.7	36	1.4	4.75	HA51	80C6	2409
193.7	36	1.4	4.75	HA51	90S6	2409
192.9	36	2.7	4.77	H051	80C6	2500
191.7	35	3.7	14.66	H032	80A2	4278
191.0	35	3.7	14.66	H032	71C2	4282
184.5	38	2.4	7.75	HA61	80B4	3665
184.0	38	1.2	5.00	H041	80C6	1000
184.0	38	1.2	5.00	H041	90S6	1000
182.6	38	1.3	7.67	H041	80B4	1000
180.4	38	3.3	7.76	H032	80B4	4336
175.2	40	2.6	5.25	H051	80C6	2500
175.2	40	2.6	5.25	H051	90S6	2500
172.6	40	1.9	8.11	HA32	80B4	1257
172.6	40	3.3	8.11	HA42	80B4	2647
172.2	39	1.6	16.49	HA32	80A2	1258
172.2	39	2.7	16.49	HA42	80A2	2649
171.0	41	2.1	5.38	HA32	80C6	1261
171.0	41	3.6	5.38	HA42	80C6	2655
171.0	41	3.6	5.38	HA42	90S6	2655
169.8	39	1.5	16.49	HA32	71C2	1264
169.8	39	2.7	16.49	HA42	71C2	2661
168.7	42	1.3	5.45	HA51	80C6	2523
168.7	42	1.3	5.45	HA51	90S6	2523
167.6	40	3.6	16.77	H032	80A2	4437
167.3	42	1.3	5.50	H041	80C6	1000
167.3	42	1.3	5.50	H041	90S6	1000
167.2	42	2.4	8.38	H051	80B4	2500
167.0	40	3.6	16.77	H032	71C2	4441
163.4	43	1.3	8.75	H041	80B4	1000
158.1	44	2.4	5.82	H051	80C6	2500
158.1	44	2.4	5.82	H051	90S6	2500
157.9	44	3.0	8.87	H032	80B4	4492
156.0	43	3.5	18.20	H032	80A2	4522
153.8	43	3.5	18.20	H032	71C2	4539
151.0	46	1.1	6.09	H041	80C6	1000
151.0	46	1.1	6.09	H041	90S6	1000
147.7	47	2.3	6.23	H032	80C6	4566
147.7	47	2.3	6.23	H032	90S6	4566
141.2	47	3.2	19.90	H032	80A2	4641
141.2	49	1.7	6.52	HA32	80C6	1344
141.2	49	3.0	6.52	HA42	80C6	2830
141.2	49	3.0	6.52	HA42	90S6	2830
140.7	47	3.2	19.90	H032	71C2	4646
138.7	48	1.4	20.26	HA32	80A2	1352

5.1 H/HA MOTORREDUCTORES (50Hz)

0.75 kW

n2 [rpm]	M2 [Nm]	fs	i	Reductor	Motor	Fr2 [N]
138.7	48	2.4	20.26	HA42	80A2	2847
138.2	48	1.4	20.26	HA32	71C2	1354
138.2	48	2.3	20.26	HA42	71C2	2850
138.0	50	2.8	10.14	H032	80B4	4651
133.8	50	3.8	21.00	H042	80A2	6081
133.3	50	3.8	21.00	H042	71C2	6087
131.3	53	1.3	10.67	HA61	80B4	4106
128.0	54	3.1	7.19	H042	80C6	6138
128.0	54	3.1	7.19	H042	90S6	6138
128.0	54	1.7	10.94	HA32	80B4	1389
128.0	54	2.8	10.94	HA42	80B4	2924
125.5	56	1.9	7.33	H051	80C6	2500
125.5	56	1.9	7.33	H051	90S6	2500
125.5	56	3.2	7.33	H061	80C6	3700
125.5	56	3.2	7.33	H061	90S6	3700
123.9	54	2.8	22.68	H032	80A2	4799
123.5	54	2.8	22.68	H032	71C2	4804
122.6	57	0.9	7.67	H041	90S6	1000
121.4	55	3.6	23.15	H042	80A2	6251
121.0	55	3.6	23.15	H042	71C2	6257
119.2	56	2.7	23.83	H032	80A2	4847
119.0	58	2.5	11.76	H032	80B4	4827
118.7	59	1.6	7.75	HA61	80C6	4245
118.7	59	1.6	7.75	HA61	90S6	4245
118.5	59	2.2	7.76	H032	80C6	4826
118.5	59	2.2	7.76	H032	90S6	4826
117.5	56	2.7	23.83	H032	71C2	4864
114.5	58	1.1	24.55	HA32	80A2	1442
114.5	58	2.0	24.55	HA42	80A2	3035
114.1	58	1.1	24.55	HA32	71C2	1443
114.1	58	2.0	24.55	HA42	71C2	3038
113.4	61	1.3	8.11	HA32	80C6	1446
113.4	61	2.2	8.11	HA42	80C6	3044
113.4	61	2.2	8.11	HA42	90S6	3044
110.5	60	3.5	25.43	HA52	80A2	3839
109.9	64	1.6	8.38	H051	80C6	2500
109.9	64	1.6	8.38	H051	90S6	2500
109.9	64	2.8	8.38	H061	80C6	3700
109.9	64	2.8	8.38	H061	90S6	3700
109.1	61	3.2	26.04	H042	80A2	6441
107.6	62	2.4	26.39	H032	80A2	4970
107.5	62	3.2	26.04	H042	71C2	6466
106.1	63	2.4	26.39	H032	71C2	4987
105.7	65	1.2	13.25	HA32	80B4	1481
105.7	65	2.2	13.25	HA42	80B4	3117

5.1 H/HA MOTORREDUCTORES (50Hz)

0.75 kW

n2 [rpm]	M2 [Nm]	fs	i	Reductor	Motor	Fr2 [N]
103.8	67	2.0	8.87	H032	80C6	4983
103.8	67	2.0	8.87	H032	90S6	4983
103.2	67	3.3	8.91	H042	80C6	6515
103.2	67	3.3	8.91	H042	90S6	6515
103.2	67	3.8	13.57	H042	80B4	6521
102.2	65	3.2	27.50	H042	80A2	6558
102.0	67	2.5	13.72	H032	80B4	5010
101.8	65	3.2	27.50	H042	71C2	6564
96.6	71	3.9	14.50	HA52	80B4	4015
95.5	72	2.4	14.66	H032	80B4	5088
94.6	70	2.1	29.70	H032	80A2	5126
94.3	70	2.1	29.70	H032	71C2	5130
94.0	71	3.2	29.89	HA52	80A2	4051
92.3	72	2.9	30.45	H042	80A2	6600
92.0	72	1.5	30.55	HA42	80A2	3264
91.9	72	2.9	30.45	H042	71C2	6600
91.7	72	1.5	30.55	HA42	71C2	3268
90.7	77	1.9	10.14	H032	80C6	5141
90.7	77	1.9	10.14	H032	90S6	5141
89.2	78	3.2	10.31	H042	80C6	6600
89.2	78	3.2	10.31	H042	90S6	6600
87.7	78	3.2	15.96	H042	80B4	6600
86.3	81	0.9	10.67	HA61	80C6	4500
86.3	81	0.9	10.67	HA61	90S6	4500
85.4	78	1.9	32.89	H032	80A2	5248
85.1	78	1.9	32.89	H032	71C2	5252
84.9	81	1.0	16.49	HA32	80B4	1593
84.9	81	1.7	16.49	HA42	80B4	3353
84.1	83	1.1	10.94	HA32	80C6	1597
84.1	83	1.9	10.94	HA42	80C6	3363
84.1	83	1.9	10.94	HA42	90S6	3363
83.5	82	2.3	16.77	H032	80B4	5245
82.8	83	3.6	16.91	HA52	80B4	4227
82.4	81	2.6	34.10	H042	80A2	6600
82.1	81	2.6	34.10	H042	71C2	6600
79.0	84	1.3	35.44	HA42	71C2	3434
78.9	88	3.3	11.67	HA52	80C6	4295
78.9	88	3.3	11.67	HA52	90S6	4295
78.2	89	1.7	11.76	H032	80C6	5311
78.2	89	1.7	11.76	H032	90S6	5311
78.0	89	2.9	11.80	H042	80C6	6600
78.0	89	2.9	11.80	H042	90S6	6600
77.7	85	2.6	36.17	HA52	80A2	4317
76.9	89	2.2	18.20	H032	80B4	5339
74.4	89	2.4	37.76	H042	80A2	6600

5.1 H/HA MOTORREDUCTORES (50Hz)

0.75 kW

n2 [rpm]	M2 [Nm]	fs	i	Reductor	Motor	Fr2 [N]
74.1	90	1.7	37.92	H032	80A2	5415
74.1	89	2.3	37.76	H042	71C2	6600
73.8	90	1.7	37.92	H032	71C2	5419
73.7	93	2.7	19.00	H042	80B4	6600
72.1	92	4.0	38.98	H052	80A2	8000
71.8	92	4.0	38.98	H052	71C2	8000
70.4	98	2.0	19.90	H032	80B4	5440
69.4	100	0.8	13.25	HA32	80C6	1703
69.4	100	1.5	13.25	HA42	80C6	3585
69.4	100	1.5	13.25	HA42	90S6	3585
69.1	100	0.9	20.26	HA32	80B4	1706
69.1	100	1.5	20.26	HA42	80B4	3591
68.4	100	2.9	20.46	HA52	80B4	4504
67.9	98	1.5	41.40	H032	80A2	5500
67.8	102	2.6	13.57	H042	80C6	6600
67.8	102	2.6	13.57	H042	90S6	6600
67.6	98	1.5	41.40	H032	71C2	5500
67.1	104	1.7	13.72	H032	80C6	5482
67.1	104	1.7	13.72	H032	90S6	5482
66.7	103	2.4	21.00	H042	80B4	6600
64.2	103	2.0	43.75	H042	80A2	6600
64.0	104	2.0	43.75	H042	71C2	6600
63.5	105	1.0	44.10	HA42	71C2	3694
63.4	109	2.7	14.50	HA52	80C6	4618
63.4	109	2.7	14.50	HA52	90S6	4618
62.8	111	1.6	14.66	H032	80C6	5500
62.8	111	1.6	14.66	H032	90S6	5500
62.5	106	2.0	44.95	HA52	80A2	4641
62.5	106	3.1	44.95	HA62	80A2	6850
61.9	107	3.4	45.36	H052	80A2	8000
61.7	111	1.8	22.68	H032	80B4	5500
61.7	108	3.4	45.36	H052	71C2	8000
60.5	114	2.3	23.15	H042	80B4	6600
59.5	112	1.3	47.25	H032	80A2	5500
59.3	112	1.3	47.25	H032	71C2	5500
59.1	112	1.9	47.53	H042	80A2	6600
58.9	113	1.9	47.53	H042	71C2	6600
58.7	117	1.7	23.83	H032	80B4	5500
57.6	120	2.2	15.96	H042	80C6	6600
57.6	120	2.2	15.96	H042	90S6	6600
57.2	116	3.2	49.13	H052	80A2	8000
57.0	116	3.2	49.13	H052	71C2	8000
57.0	121	1.3	24.55	HA42	80B4	3828
56.7	121	3.9	24.71	H052	80B4	8000
56.5	118	1.9	49.78	HA52	80A2	4802

5.1 H/HA MOTORREDUCTORES (50Hz)

0.75 kW

n2 [rpm]	M2 [Nm]	fs	i	Reductor	Motor	Fr2 [N]
56.5	118	2.4	49.78	HA62	80A2	7087
56.4	115	2.0	49.80	HA53	80A2	4802
56.4	115	3.1	49.80	HA63	80A2	7088
56.2	116	1.9	49.80	HA53	71C2	4808
56.2	116	3.1	49.80	HA63	71C2	7097
55.8	124	1.2	16.49	HA42	80C6	3856
55.8	124	1.2	16.49	HA42	90S6	3856
55.4	125	3.8	16.59	H052	80C6	8000
55.4	125	3.8	16.59	H052	90S6	8000
55.1	125	2.2	25.43	HA52	80B4	4842
55.1	125	3.4	25.43	HA62	80B4	7147
54.9	127	1.6	16.77	H032	80C6	5500
54.9	127	1.6	16.77	H032	90S6	5500
54.4	128	2.5	16.91	HA52	80C6	4861
54.4	128	2.5	16.91	HA52	90S6	4861
53.8	128	2.0	26.04	H042	80B4	6600
53.5	129	3.8	26.18	H052	80B4	8000
53.0	130	1.5	26.39	H032	80B4	5500
52.4	124	1.2	53.59	H033	80A2	5500
52.2	124	1.2	53.59	H033	71C2	5500
51.8	128	1.6	54.25	H042	80A2	6600
51.6	129	1.6	54.25	H042	71C2	6600
51.1	136	3.6	18.00	H052	80C6	8000
51.1	136	3.6	18.00	H052	90S6	8000
50.9	135	2.1	27.50	H042	80B4	6600
50.5	137	1.5	18.20	H032	80C6	5500
50.5	137	1.5	18.20	H032	90S6	5500
50.1	133	2.8	56.11	H052	80A2	8000
49.9	133	2.8	56.11	H052	71C2	8000
49.2	140	3.5	28.44	H052	80B4	8000
48.4	143	1.8	19.00	H042	80C6	6600
48.4	143	1.8	19.00	H042	90S6	6600
47.8	136	2.8	58.81	H053	80A2	8000
47.6	136	2.7	58.81	H053	71C2	8000
47.1	146	1.4	29.70	H032	80B4	5500
46.8	147	2.0	29.89	HA52	80B4	5110
46.8	147	3.1	29.89	HA62	80B4	7543
46.6	139	1.6	60.25	HA53	80A2	5117
46.6	139	2.6	60.25	HA63	80A2	7553
46.5	140	1.6	60.25	HA53	71C2	5123
46.5	140	2.6	60.25	HA63	71C2	7562
46.2	150	1.4	19.90	H032	80C6	5500
46.2	150	1.4	19.90	H032	90S6	5500
46.1	151	3.2	19.97	H052	80C6	8000
46.1	151	3.2	19.97	H052	90S6	8000

5.1 H/HA MOTORREDUCTORES (50Hz)

0.75 kW

n2 [rpm]	M2 [Nm]	fs	i	Reductor	Motor	Fr2 [N]
46.0	150	1.9	30.45	H042	80B4	6600
45.8	150	0.9	30.55	HA42	80B4	4118
45.4	143	1.6	61.83	H043	80A2	6600
45.4	153	1.0	20.26	HA42	80C6	4130
45.4	153	1.0	20.26	HA42	90S6	4130
45.4	146	1.5	61.87	HA52	80A2	5163
45.4	146	2.3	61.87	HA62	80A2	7620
45.3	143	1.6	61.83	H043	71C2	6600
45.0	154	2.0	20.46	HA52	80C6	5180
45.0	154	2.0	20.46	HA52	90S6	5180
45.0	154	3.1	20.46	HA62	80C6	7646
45.0	154	3.1	20.46	HA62	90S6	7646
44.4	155	3.2	31.52	H052	80B4	8000
43.8	159	1.7	21.00	H042	80C6	6600
43.8	159	1.7	21.00	H042	90S6	6600
42.6	162	1.2	32.89	H032	80B4	5500
42.5	164	3.0	21.67	H052	80C6	8000
42.5	164	3.0	21.67	H052	90S6	8000
42.4	162	3.0	33.00	H052	80B4	8000
41.1	167	1.7	34.10	H042	80B4	6600
40.6	171	1.2	22.68	H032	80C6	5500
40.6	171	1.2	22.68	H032	90S6	5500
39.7	175	1.6	23.15	H042	80C6	6600
39.7	175	1.6	23.15	H042	90S6	6600
38.7	178	1.7	36.17	HA52	80B4	5445
38.7	178	2.6	36.17	HA62	80B4	8000
38.6	180	1.2	23.83	H032	80C6	5500
38.6	180	1.2	23.83	H032	90S6	5500
38.6	168	2.2	72.75	H053	80A2	8000
38.5	169	2.2	72.75	H053	71C2	8000
37.5	185	0.9	24.55	HA42	80C6	4300
37.5	185	0.9	24.55	HA42	90S6	4300
37.5	173	1.3	74.88	HA53	80A2	5502
37.5	173	2.1	74.88	HA63	80A2	8000
37.4	174	1.3	74.88	HA53	71C2	5508
37.4	174	2.1	74.88	HA63	71C2	8000
37.2	186	2.6	24.71	H052	80C6	8000
37.2	186	2.6	24.71	H052	90S6	8000
37.1	185	1.5	37.76	H042	80B4	6600
36.9	186	1.1	37.92	H032	80B4	5500
36.6	177	1.3	76.67	H043	80A2	6600
36.5	178	1.3	76.67	H043	71C2	6600
36.2	192	1.5	25.43	HA52	80C6	5570
36.2	192	1.5	25.43	HA52	90S6	5570
36.2	192	2.4	25.43	HA62	80C6	8000

5.1 H/HA MOTORREDUCTORES (50Hz)

0.75 kW

n2 [rpm]	M2 [Nm]	fs	i	Reductor	Motor	Fr2 [N]
36.2	192	2.4	25.43	HA62	90S6	8000
35.9	191	2.6	38.98	H052	80B4	8000
35.3	197	1.4	26.04	H042	80C6	6600
35.3	197	1.4	26.04	H042	90S6	6600
35.1	198	2.6	26.18	H052	80C6	8000
35.1	198	2.6	26.18	H052	90S6	8000
34.9	199	1.1	26.39	H032	80C6	5500
34.9	199	1.1	26.39	H032	90S6	5500
33.8	203	1.0	41.40	H032	80B4	5500
33.5	208	1.4	27.50	H042	80C6	6600
33.5	208	1.4	27.50	H042	90S6	6600
32.7	198	3.2	85.82	H063	80A2	12000
32.6	199	3.2	85.82	H063	71C2	12000
32.4	215	2.4	28.44	H052	80C6	8000
32.4	215	2.4	28.44	H052	90S6	8000
32.3	201	1.1	87.05	H043	80A2	6600
32.2	202	1.1	87.05	H043	71C2	6600
32.0	215	1.3	43.75	H042	80B4	6600
31.9	204	1.1	88.02	HA53	80A2	5807
31.9	204	1.8	88.02	HA63	80A2	8000
31.8	204	1.1	88.02	HA53	71C2	5813
31.8	204	1.8	88.02	HA63	71C2	8000
31.4	221	3.8	29.33	H062	80C6	12000
31.4	221	3.8	29.33	H062	90S6	12000
31.1	221	1.3	44.95	HA52	80B4	5855
31.1	221	2.0	44.95	HA62	80B4	8000
31.0	224	0.9	29.70	H032	80C6	5500
31.0	224	0.9	29.70	H032	90S6	5500
31.0	209	1.8	90.51	H053	80A2	8000
30.9	223	2.2	45.36	H052	80B4	8000
30.9	210	1.8	90.51	H053	71C2	8000
30.8	226	1.4	29.89	HA52	80C6	5878
30.8	226	1.4	29.89	HA52	90S6	5878
30.8	226	2.1	29.89	HA62	80C6	8000
30.8	226	2.1	29.89	HA62	90S6	8000
30.4	226	3.8	46.06	H062	80B4	12000
30.2	230	1.3	30.45	H042	80C6	6600
30.2	230	1.3	30.45	H042	90S6	6600
29.7	219	2.9	94.76	H063	80A2	12000
29.5	233	1.2	47.53	H042	80B4	6600
29.5	220	2.9	94.76	H063	71C2	12000
29.2	238	2.2	31.52	H052	80C6	8000
29.2	238	2.2	31.52	H052	90S6	8000
28.8	242	3.7	32.00	H062	80C6	12000
28.8	242	3.7	32.00	H062	90S6	12000

5.1 H/HA MOTORREDUCTORES (50Hz)

0.75 kW

n2 [rpm]	M2 [Nm]	fs	i	Reductor	Motor	Fr2 [N]
28.5	241	2.0	49.13	H052	80B4	8000
28.1	244	1.2	49.78	HA52	80B4	6000
28.1	239	1.3	49.80	HA53	80B4	6000
28.1	244	1.5	49.78	HA62	80B4	8000
28.1	239	2.0	49.80	HA63	80B4	8000
27.9	249	2.1	33.00	H052	80C6	8000
27.9	249	2.1	33.00	H052	90S6	8000
27.0	257	1.1	34.10	H042	80C6	6600
27.0	257	1.1	34.10	H042	90S6	6600
25.8	266	1.1	54.25	H042	80B4	6600
25.8	252	1.5	108.95	H053	80A2	8000
25.7	253	1.5	108.95	H053	71C2	8000
25.4	273	1.2	36.17	HA52	80C6	6000
25.4	273	1.2	36.17	HA52	90S6	6000
25.4	273	1.8	36.17	HA62	80C6	8000
25.4	273	1.8	36.17	HA62	90S6	8000
25.2	258	0.9	111.61	HA53	80A2	6000
25.2	258	1.4	111.61	HA63	80A2	8000
25.1	259	0.9	111.61	HA53	71C2	6000
25.1	259	1.4	111.61	HA63	71C2	8000
24.9	276	1.8	56.11	H052	80B4	8000
24.9	279	3.0	36.99	H062	80C6	12000
24.9	279	3.0	36.99	H062	90S6	12000
24.4	285	1.0	37.76	H042	80C6	6600
24.4	285	1.0	37.76	H042	90S6	6600
23.8	283	1.8	58.81	H053	80B4	8000
23.8	273	2.3	118.00	H063	80A2	12000
23.7	274	2.3	118.00	H063	71C2	12000
23.6	294	1.7	38.98	H052	80C6	8000
23.6	294	1.7	38.98	H052	90S6	8000
23.2	290	1.0	60.25	HA53	80B4	6000
23.2	290	1.7	60.25	HA63	80B4	8000
22.8	304	2.9	40.33	H062	80C6	12000
22.8	304	2.9	40.33	H062	90S6	12000
22.6	297	1.0	61.83	H043	80B4	6600
22.6	304	1.0	61.87	HA52	80B4	6000
22.6	304	1.4	61.87	HA62	80B4	8000
21.5	323	0.9	43.75	H042	90S6	6600
20.9	312	1.2	134.76	H053	80A2	8000
20.8	313	1.2	134.76	H053	71C2	8000
20.8	313	2.0	135.40	H063	80A2	12000
20.7	314	2.0	135.40	H063	71C2	12000
20.5	339	0.9	44.95	HA52	80C6	6000
20.5	339	0.9	44.95	HA52	90S6	6000
20.5	339	1.4	44.95	HA62	80C6	8000

5.1 H/HA MOTORREDUCTORES (50Hz)

0.75 kW

n2 [rpm]	M2 [Nm]	fs	i	Reductor	Motor	Fr2 [N]
20.5	339	1.4	44.95	HA62	90S6	8000
20.3	342	1.5	45.36	H052	80C6	8000
20.3	342	1.5	45.36	H052	90S6	8000
20.3	321	1.1	138.71	HA63	80A2	8000
20.2	322	1.1	138.71	HA63	71C2	8000
20.0	348	2.6	46.06	H062	80C6	12000
20.0	348	2.6	46.06	H062	90S6	12000
19.2	350	1.4	72.75	H053	80B4	8000
18.8	346	1.8	149.51	H063	80A2	12000
18.7	371	1.4	49.13	H052	80C6	8000
18.7	371	1.4	49.13	H052	90S6	8000
18.7	347	1.8	149.51	H063	71C2	12000
18.7	360	0.8	74.88	HA53	80B4	6000
18.7	360	1.3	74.88	HA63	80B4	8000
18.6	366	2.4	49.45	H063	90S6	12000
18.5	376	0.8	49.78	HA52	80C6	6000
18.5	376	0.8	49.78	HA52	90S6	6000
18.5	368	0.9	49.80	HA53	80C6	6000
18.5	368	0.9	49.80	HA53	90S6	6000
18.5	376	1.0	49.78	HA62	80C6	8000
18.5	376	1.0	49.78	HA62	90S6	8000
18.5	368	1.4	49.80	HA63	80C6	8000
18.5	368	1.4	49.80	HA63	90S6	8000
18.2	358	3.8	154.76	H083	80A2	18000
17.8	365	1.0	157.29	H053	71C2	8000
17.3	375	3.6	162.35	H083	80A2	18000
16.8	404	2.2	54.61	H063	90S6	12000
16.5	395	1.6	170.67	H063	80A2	12000
16.4	424	1.2	56.11	H052	80C6	8000
16.4	424	1.2	56.11	H052	90S6	8000
16.4	396	1.6	170.67	H063	71C2	12000
16.3	413	2.1	85.82	H063	80B4	12000
15.9	423	1.1	88.02	HA63	80B4	8000
15.7	414	3.3	179.13	H083	80A2	18000
15.6	435	1.2	58.81	H053	80C6	8000
15.6	435	1.2	58.81	H053	90S6	8000
15.5	435	1.1	90.51	H053	80B4	8000
15.3	445	1.1	60.25	HA63	80C6	8000
15.3	445	1.1	60.25	HA63	90S6	8000
15.1	430	1.5	186.18	H063	80A2	12000
15.0	432	1.5	186.18	H063	71C2	12000
14.9	467	1.0	61.87	HA62	80C6	8000
14.9	467	1.0	61.87	HA62	90S6	8000
14.8	456	1.9	94.76	H063	80B4	12000
14.4	451	3.0	195.07	H083	80A2	18000

5.1 H/HA MOTORREDUCTORES (50Hz)

0.75 kW

n2 [rpm]	M2 [Nm]	fs	i	Reductor	Motor	Fr2 [N]
14.3	472	3.8	98.09	H083	80B4	18000
13.5	503	1.8	68.00	H063	90S6	12000
13.1	498	1.3	215.21	H063	80A2	12000
13.0	499	1.3	215.21	H063	71C2	12000
12.9	524	1.0	108.95	H053	80B4	8000
12.9	528	3.6	71.48	H083	80C6	18000
12.9	528	3.6	71.48	H083	90S6	18000
12.6	538	1.0	72.75	H053	80C6	8000
12.6	538	1.0	72.75	H053	90S6	8000
12.6	515	2.6	222.78	H083	80A2	18000
12.5	537	0.9	111.61	HA63	80B4	8000
12.4	542	3.3	112.78	H083	80B4	18000
12.3	553	0.9	74.88	HA63	80C6	8000
12.3	553	0.9	74.88	HA63	90S6	8000
12.0	543	1.2	234.67	H063	80A2	12000
11.9	567	1.5	118.00	H063	80B4	12000
11.9	545	1.2	234.67	H063	71C2	12000
11.7	583	3.2	78.87	H083	80C6	18000
11.7	583	3.2	78.87	H083	90S6	18000
11.3	598	3.0	124.44	H083	80B4	18000
10.8	632	3.0	85.56	H083	80C6	18000
10.8	632	3.0	85.56	H083	90S6	18000
10.7	634	1.4	85.82	H063	80C6	12000
10.7	634	1.4	85.82	H063	90S6	12000
10.3	651	1.3	135.40	H063	80B4	12000
9.8	684	2.6	142.15	H083	80B4	18000
9.7	700	1.3	94.76	H063	80C6	12000
9.7	700	1.3	94.76	H063	90S6	12000
9.4	719	1.2	149.51	H063	80B4	12000
9.4	725	2.6	98.09	H083	80C6	18000
9.4	725	2.6	98.09	H083	90S6	18000
9.0	744	2.4	154.76	H083	80B4	18000
8.6	781	2.3	162.35	H083	80B4	18000
8.2	821	1.0	170.67	H063	80B4	12000
8.2	834	2.3	112.78	H083	80C6	18000
8.2	834	2.3	112.78	H083	90S6	18000
7.8	872	1.0	118.00	H063	80C6	12000
7.8	872	1.0	118.00	H063	90S6	12000
7.8	861	2.1	179.13	H083	80B4	18000
7.5	895	0.9	186.18	H063	80B4	12000
7.4	920	2.1	124.44	H083	80C6	18000
7.4	920	2.1	124.44	H083	90S6	18000
7.2	938	1.9	195.07	H083	80B4	18000
6.9	980	0.9	135.40	H063	90S6	12000
6.5	1051	1.8	142.15	H083	80C6	18000

5.1 H/HA MOTORREDUCTORES (50Hz)

0.75 kW

n2 [rpm]	M2 [Nm]	fs	i	Reductor	Motor	Fr2 [N]
6.5	1051	1.8	142.15	H083	90S6	18000
6.4	1060	3.5	143.42	H103	90S6	22000
6.3	1071	1.7	222.78	H083	80B4	18000
5.9	1144	1.7	154.76	H083	80C6	18000
5.9	1144	1.7	154.76	H083	90S6	18000
5.7	1200	1.6	162.35	H083	80C6	18000
5.7	1200	1.6	162.35	H083	90S6	18000
5.7	1189	3.1	160.82	H103	90S6	22000
5.1	1324	1.4	179.13	H083	80C6	18000
5.1	1324	1.4	179.13	H083	90S6	18000
5.1	1338	2.7	181.07	H103	90S6	22000
4.7	1442	1.3	195.07	H083	80C6	18000
4.7	1442	1.3	195.07	H083	90S6	18000
4.7	1435	2.6	194.21	H103	90S6	22000
4.3	1593	2.3	215.45	H103	90S6	22000
4.1	1647	1.1	222.78	H083	80C6	18000
4.1	1647	1.1	222.78	H083	90S6	18000
3.8	1793	2.1	242.59	H103	90S6	22000

0.92 kW

n2 [rpm]	M2 [Nm]	fs	i	Reductor	Motor	Fr2 [N]
973.9	9	2.9	1.44	H041	80C4	672
966.7	9	2.8	1.45	HA41	80C4	512
700.0	12	2.1	2.00	H041	80C4	738
550.0	15	1.9	2.55	H041	80C4	788
549.0	16	1.2	2.55	HA31	80C4	611
515.8	17	1.8	2.71	H041	80C4	802
475.5	18	1.1	2.94	HA31	80C4	641
475.5	18	1.4	2.94	HA41	80C4	648
475.5	18	2.2	2.94	HA51	80C4	1786
450.8	19	2.1	3.11	H041	80C4	831
440.7	19	1.0	3.18	HA31	80C4	657
417.0	20	1.0	3.36	HA31	80C4	670
390.2	22	2.1	3.59	H041	80C4	862
362.1	24	0.9	3.87	HA31	80C4	702
350.0	24	3.7	4.00	H051	80C4	2325
333.3	26	1.8	4.20	H041	80C4	896
332.2	26	0.8	4.21	HA31	80C4	722
298.1	28	3.4	4.70	H032	80C4	3715
294.7	29	1.0	4.75	HA41	80C4	760
294.7	29	1.7	4.75	HA51	80C4	2095
293.5	29	3.3	4.77	H051	80C4	2450
280.0	30	1.5	5.00	H041	80C4	934

5.1 H/HA MOTORREDUCTORES (50Hz)

0.92 kW

n2 [rpm]	M2 [Nm]	fs	i	Reductor	Motor	Fr2 [N]
266.7	32	3.1	5.25	H051	80C4	2500
260.3	32	2.5	5.38	HA32	80C4	1096
256.7	33	0.9	5.45	HA41	80C4	796
256.7	33	1.5	5.45	HA51	80C4	2194
254.5	33	1.5	5.50	H041	80C4	954
240.6	35	2.8	5.82	H051	80C4	2500
229.9	37	1.3	6.09	H041	80C4	975
224.7	38	2.8	6.23	H032	80C4	4010
214.8	39	2.0	6.52	HA32	80C4	1169
214.8	39	3.6	6.52	HA42	80C4	2461
194.8	43	3.7	7.19	H042	80C4	5376
190.9	45	2.2	7.33	H051	80C4	2500
190.9	45	3.8	7.33	H061	80C4	3700
182.6	47	1.1	7.67	H041	80C4	1000
180.6	47	1.9	7.75	HA61	80C4	3691
180.4	47	2.7	7.76	H032	80C4	4246
172.6	49	1.5	8.11	HA32	80C4	1257
172.6	49	2.7	8.11	HA42	80C4	2647
167.2	51	2.0	8.38	H051	80C4	2500
167.2	51	3.3	8.38	H061	80C4	3700
160.0	53	1.0	8.75	H041	80C4	1000
157.9	53	2.4	8.87	H032	80C4	4389
157.1	54	3.9	8.91	H042	80C4	5712
138.0	61	2.3	10.14	H032	80C4	4533
135.7	62	3.9	10.31	H042	80C4	5946
131.3	65	1.1	10.67	HA61	80C4	4106
128.0	66	1.4	10.94	HA32	80C4	1389
128.0	66	2.3	10.94	HA42	80C4	2924
120.0	70	4.0	11.67	HA52	80C4	3735
119.0	71	2.0	11.76	H032	80C4	4691
118.6	71	3.5	11.80	H042	80C4	6165
105.7	80	1.0	13.25	HA32	80C4	1481
105.7	80	1.8	13.25	HA42	80C4	3117
103.2	82	3.1	13.57	H042	80C4	6396
102.0	83	2.1	13.72	H032	80C4	4851
96.6	87	3.2	14.50	HA52	80C4	4015
95.5	88	1.9	14.66	H032	80C4	4918
87.7	96	2.6	15.96	H042	80C4	6600
84.9	99	0.8	16.49	HA32	80C4	1593
84.9	99	1.4	16.49	HA42	80C4	3353
83.5	101	1.9	16.77	H032	80C4	5051
82.8	102	2.9	16.91	HA52	80C4	4227
76.9	110	1.8	18.20	H032	80C4	5129
73.7	114	2.2	19.00	H042	80C4	6600
70.4	120	1.7	19.90	H032	80C4	5209

5.1 H/HA MOTORREDUCTORES (50Hz)

0.92 kW

n2 [rpm]	M2 [Nm]	fs	i	Reductor	Motor	Fr2 [N]
70.1	120	3.8	19.97	H052	80C4	8000
69.1	122	1.2	20.26	HA42	80C4	3591
68.4	123	2.4	20.46	HA52	80C4	4504
68.4	123	3.7	20.46	HA62	80C4	6647
66.7	127	2.0	21.00	H042	80C4	6600
64.6	131	3.6	21.67	H052	80C4	8000
61.7	137	1.5	22.68	H032	80C4	5320
60.5	139	1.9	23.15	H042	80C4	6600
58.7	144	1.4	23.83	H032	80C4	5359
57.0	148	1.0	24.55	HA42	80C4	3828
56.7	149	3.2	24.71	H052	80C4	8000
55.1	153	1.8	25.43	HA52	80C4	4842
55.1	153	2.8	25.43	HA62	80C4	7147
53.8	157	1.7	26.04	H042	80C4	6600
53.5	158	3.1	26.18	H052	80C4	8000
53.0	159	1.3	26.39	H032	80C4	5433
50.9	166	1.7	27.50	H042	80C4	6600
49.2	171	2.9	28.44	H052	80C4	8000
47.1	179	1.1	29.70	H032	80C4	5500
46.8	180	1.7	29.89	HA52	80C4	5110
46.8	180	2.5	29.89	HA62	80C4	7543
46.0	183	1.5	30.45	H042	80C4	6600
44.4	190	2.6	31.52	H052	80C4	8000
42.6	198	1.0	32.89	H032	80C4	5500
42.4	199	2.5	33.00	H052	80C4	8000
41.1	205	1.4	34.10	H042	80C4	6600
38.7	218	1.4	36.17	HA52	80C4	5445
38.7	218	2.2	36.17	HA62	80C4	8000
37.8	223	3.6	36.99	H062	80C4	12000
37.1	228	1.2	37.76	H042	80C4	6600
35.9	235	2.1	38.98	H052	80C4	8000
34.7	243	3.5	40.33	H062	80C4	12000
32.0	264	1.1	43.75	H042	80C4	6600
31.1	271	1.0	44.95	HA52	80C4	5855
31.1	271	1.6	44.95	HA62	80C4	8000
30.9	273	1.8	45.36	H052	80C4	8000
30.4	278	3.1	46.06	H062	80C4	12000
29.5	286	1.0	47.53	H042	80C4	6600
28.5	296	1.7	49.13	H052	80C4	8000
28.1	300	1.0	49.78	HA52	80C4	6000
28.1	294	1.0	49.80	HA53	80C4	6000
28.1	300	1.2	49.78	HA62	80C4	8000
28.1	294	1.6	49.80	HA63	80C4	8000
24.9	338	1.4	56.11	H052	80C4	8000
23.8	347	1.4	58.81	H053	80C4	8000

5.1 H/HA MOTORREDUCTORES (50Hz)

0.92 kW

n2 [rpm]	M2 [Nm]	fs	i	Reductor	Motor	Fr2 [N]
23.2	355	0.8	60.25	HA53	80C4	6000
23.2	355	1.4	60.25	HA63	80C4	8000
22.6	373	1.2	61.87	HA62	80C4	8000
19.2	429	1.2	72.75	H053	80C4	8000
18.7	442	1.1	74.88	HA63	80C4	8000
17.8	465	3.9	78.87	H083	80C4	18000
16.4	505	3.6	85.56	H083	80C4	18000
16.3	506	1.7	85.82	H063	80C4	12000
15.9	519	0.9	88.02	HA63	80C4	8000
15.5	534	0.9	90.51	H053	80C4	8000
14.8	559	1.5	94.76	H063	80C4	12000
14.3	579	3.1	98.09	H083	80C4	18000
12.4	665	2.7	112.78	H083	80C4	18000
11.9	696	1.2	118.00	H063	80C4	12000
11.3	734	2.5	124.44	H083	80C4	18000
10.3	799	1.1	135.40	H063	80C4	12000
9.8	839	2.1	142.15	H083	80C4	18000
9.4	882	1.0	149.51	H063	80C4	12000
9.0	913	2.0	154.76	H083	80C4	18000
8.6	958	1.9	162.35	H083	80C4	18000
7.8	1057	1.7	179.13	H083	80C4	18000
7.2	1151	1.6	195.07	H083	80C4	18000
6.3	1314	1.4	222.78	H083	80C4	18000

1.10 kW

n2 [rpm]	M2 [Nm]	fs	i	Reductor	Motor	Fr2 [N]
1975.7	5	3.8	1.44	H041	80B2	541
1961.0	5	3.7	1.45	HA41	80B2	404
1420.0	7	2.7	2.00	H041	80B2	597
1115.7	9	2.6	2.55	H041	80B2	640
1113.7	9	1.6	2.55	HA31	80B2	483
1046.3	9	2.4	2.71	H041	80B2	652
994.8	10	2.4	1.44	H041	90S4	660
980.9	10	2.4	1.44	H041	80D4	663
973.6	10	2.4	1.45	HA41	80D4	510
973.6	10	3.8	1.45	HA51	80D4	1407
966.7	11	3.8	1.45	HA51	90S4	1410
964.5	10	1.5	2.94	HA31	80B2	506
964.5	10	1.8	2.94	HA41	80B2	512
964.5	10	2.9	2.94	HA51	80B2	1411
914.6	11	2.8	3.11	H041	80B2	677
894.1	11	1.4	3.18	HA31	80B2	519
846.0	12	1.3	3.36	HA31	80B2	529

5.1 H/HA MOTORREDUCTORES (50Hz)

1.10 kW

n2 [rpm]	M2 [Nm]	fs	i	Reductor	Motor	Fr2 [N]
791.5	12	2.7	3.59	H041	80B2	705
746.4	14	3.0	1.27	H051	100LR6	1833
738.6	14	3.0	1.27	H051	90L6	1839
734.5	13	1.2	3.87	HA31	80B2	554
705.0	14	1.7	2.00	H041	80D4	725
700.0	15	1.7	2.00	H041	90S4	727
676.2	15	2.3	4.20	H041	80B2	736
673.9	15	1.1	4.21	HA31	80B2	571
672.9	15	4.0	2.13	H051	90S4	1893
663.5	15	3.9	2.13	H051	80D4	1901
653.9	16	1.7	1.44	H041	90L6	739
649.0	16	2.6	1.45	HA51	90L6	1610
597.9	16	1.0	4.75	HA31	80B2	594
595.8	17	1.4	4.75	HA41	80B2	601
595.8	17	2.3	4.75	HA51	80B2	1657
568.0	17	1.9	5.00	H041	80B2	771
553.9	18	1.6	2.55	H041	80D4	773
552.9	18	1.0	2.55	HA31	80D4	610
550.0	19	1.6	2.55	H041	90S4	774
548.3	19	3.8	2.57	H051	80D4	2015
544.4	19	3.7	2.57	H051	90S4	2019
527.9	18	3.3	5.38	HA32	80B2	866
520.7	19	1.2	5.45	HA41	80B2	629
520.7	19	2.0	5.45	HA51	80B2	1733
519.5	20	1.5	2.71	H041	80D4	786
516.4	19	2.0	5.50	H041	80B2	790
515.8	20	1.5	2.71	H041	90S4	787
488.1	20	3.7	5.82	H051	80B2	2090
485.7	21	1.9	2.94	HA51	90S4	1773
478.9	21	0.9	2.94	HA31	80D4	639
478.9	21	1.2	2.94	HA41	80D4	647
478.9	21	1.9	2.94	HA51	80D4	1782
470.0	22	1.2	2.00	H041	90L6	804
466.3	21	1.8	6.09	H041	80B2	811
455.9	21	3.7	6.23	H032	80B2	3263
454.1	22	1.8	3.11	H041	80D4	812
451.6	23	3.5	3.17	H051	90S4	2136
450.8	23	1.8	3.11	H041	90S4	814
447.1	23	2.7	2.13	H051	100LR6	2142
445.3	23	3.5	3.17	H051	80D4	2145
443.9	23	0.9	3.18	HA31	80D4	656
437.6	24	2.7	2.13	H051	90L6	2155
435.8	22	2.7	6.52	HA32	80B2	923
420.0	24	0.8	3.36	HA31	80D4	668
398.5	26	1.8	3.59	H041	90S4	838

5.1 H/HA MOTORREDUCTORES (50Hz)

1.10 kW

n2 [rpm]	M2 [Nm]	fs	i	Reductor	Motor	Fr2 [N]
393.0	26	1.7	3.59	H041	80D4	841
387.3	25	3.0	7.33	H051	80B2	2240
382.4	27	3.4	3.69	H051	80D4	2245
380.0	27	3.5	2.50	HA61	100LR6	2881
379.7	27	3.4	3.69	H051	90S4	2249
372.0	28	3.4	2.50	HA61	90L6	2901
370.4	27	1.4	7.67	H041	80B2	857
369.4	28	2.6	2.57	H051	100LR6	2266
369.3	28	1.1	2.55	H041	90L6	852
366.5	27	2.5	7.75	HA61	80B2	2916
365.9	27	3.5	7.76	H032	80B2	3470
365.6	28	2.6	2.57	H051	90L6	2273
357.5	29	3.2	4.00	H051	90S4	2290
352.5	29	3.1	4.00	H051	80D4	2299
350.2	28	2.0	8.11	HA32	80B2	993
350.2	28	3.5	8.11	HA42	80B2	2091
346.3	30	1.1	2.71	H041	90L6	864
339.1	29	2.6	8.38	H051	80B2	2330
335.7	30	1.5	4.20	H041	80D4	871
333.3	31	1.5	4.20	H041	90S4	873
324.6	30	1.4	8.75	H041	80B2	883
321.6	32	3.5	4.38	HA61	80D4	3045
320.3	30	3.2	8.87	H032	80B2	3599
319.3	32	3.4	4.38	HA61	90S4	3053
315.8	33	1.3	2.94	HA51	90L6	2047
302.7	34	1.2	3.11	H041	90L6	890
300.3	34	2.8	4.70	H032	80D4	3650
300.0	34	2.4	3.17	H051	100LR6	2408
300.0	34	4.0	3.17	H061	100LR6	3700
298.1	34	2.8	4.70	H032	90S4	3657
296.8	35	2.4	3.17	H051	90L6	2416
296.8	35	3.9	3.17	H061	90L6	3700
296.8	34	0.9	4.75	HA41	80D4	758
296.8	34	1.5	4.75	HA51	80D4	2090
295.6	34	2.8	4.77	H051	80D4	2420
294.7	35	1.4	4.75	HA51	90S4	2095
293.5	35	2.7	4.77	H051	90S4	2425
286.0	36	1.3	5.00	H041	90S4	902
282.0	36	1.2	5.00	H041	80D4	905
280.0	35	3.0	10.14	H032	80B2	3731
268.6	38	2.6	5.25	H051	80D4	2488
266.7	38	2.6	5.25	H051	90S4	2493
266.3	37	1.4	10.67	HA61	80B2	3243
262.1	38	2.1	5.38	HA32	80D4	1094
262.1	38	3.6	5.38	HA42	80D4	2303

5.1 H/HA MOTORREDUCTORES (50Hz)

1.10 kW

n2 [rpm]	M2 [Nm]	fs	i	Reductor	Motor	Fr2 [N]
260.3	39	3.6	5.38	HA42	90S4	2308
259.2	40	1.2	3.59	H041	90L6	918
258.8	38	1.8	10.94	HA32	80B2	1098
258.8	38	3.0	10.94	HA42	80B2	2312
258.5	39	1.3	5.45	HA51	80D4	2188
257.6	40	2.4	3.69	H051	100LR6	2500
257.6	40	3.9	3.69	H061	100LR6	3700
256.7	40	1.3	5.45	HA51	90S4	2194
256.4	40	1.3	5.50	H041	80D4	922
254.5	40	1.2	5.50	H041	90S4	923
252.2	41	2.3	3.69	H051	90L6	2500
252.2	41	3.9	3.69	H061	90L6	3700
242.3	42	2.4	5.82	H051	80D4	2500
241.5	40	2.7	11.76	H032	80B2	3879
240.6	42	2.4	5.82	H051	90S4	2500
237.5	43	2.2	4.00	H051	100LR6	2500
237.5	43	3.6	4.00	H061	100LR6	3700
235.0	44	2.2	4.00	H051	90L6	2500
235.0	44	3.6	4.00	H061	90L6	3700
231.5	44	1.1	6.09	H041	80D4	940
229.9	44	1.1	6.09	H041	90S4	941
226.4	45	2.4	6.23	H032	80D4	3927
224.7	45	2.3	6.23	H032	90S4	3934
223.8	46	1.0	4.20	H041	90L6	944
216.7	48	2.4	4.38	HA61	100LR6	3474
216.3	47	1.7	6.52	HA32	80D4	1166
216.3	47	3.0	6.52	HA42	80D4	2455
214.8	47	3.0	6.52	HA42	90S4	2461
213.6	46	1.3	13.25	HA32	80B2	1171
213.6	46	2.3	13.25	HA42	80B2	2465
212.1	49	2.4	4.38	HA61	90L6	3499
207.0	47	2.7	13.72	H032	80B2	4033
202.3	50	2.0	4.70	H032	100LR6	4033
200.2	51	2.0	4.70	H032	90L6	4043
199.2	52	1.9	4.77	H051	100LR6	2500
199.2	52	3.3	4.77	H061	100LR6	3700
196.2	51	3.1	7.19	H042	80D4	5296
195.8	53	1.0	4.75	HA51	90L6	2401
195.0	53	1.9	4.77	H051	90L6	2500
195.0	53	3.2	4.77	H061	90L6	3700
194.8	52	3.1	7.19	H042	90S4	5306
193.8	50	2.5	14.66	H032	80B2	4099
192.3	53	1.9	7.33	H051	80D4	2500
192.3	53	3.2	7.33	H061	80D4	3700
190.9	53	1.9	7.33	H051	90S4	2500

5.1 H/HA MOTORREDUCTORES (50Hz)

1.10 kW

n2 [rpm]	M2 [Nm]	fs	i	Reductor	Motor	Fr2 [N]
190.9	53	3.2	7.33	H061	90S4	3700
186.5	55	0.9	7.67	H041	90S4	975
183.9	55	0.9	7.67	H041	80D4	978
181.9	56	1.6	7.75	HA61	80D4	3682
181.6	56	2.3	7.76	H032	80D4	4144
181.0	57	1.8	5.25	H051	100LR6	2500
181.0	57	3.1	5.25	H061	100LR6	3700
180.6	56	1.6	7.75	HA61	90S4	3691
180.4	56	2.2	7.76	H032	90S4	4151
177.9	55	3.4	15.96	H042	80B2	5456
177.1	58	1.8	5.25	H051	90L6	2500
177.1	58	3.1	5.25	H061	90L6	3700
173.9	59	2.9	5.46	H042	100LR6	5468
173.9	58	1.3	8.11	HA32	80D4	1254
173.9	58	2.2	8.11	HA42	80D4	2640
172.9	59	2.5	5.38	HA42	90L6	2645
172.6	58	2.2	8.11	HA42	90S4	2647
172.3	60	0.9	5.45	HA51	90L6	2505
172.2	57	1.1	16.49	HA32	80B2	1258
172.2	57	1.9	16.49	HA42	80B2	2649
170.3	60	2.8	5.46	H042	90L6	5500
168.8	58	2.5	16.77	H032	80B2	4237
168.4	61	1.7	8.38	H051	80D4	2500
168.4	61	2.8	8.38	H061	80D4	3700
167.9	58	3.9	16.91	HA52	80B2	3339
167.2	61	1.6	8.38	H051	90S4	2500
167.2	61	2.8	8.38	H061	90S4	3700
163.3	63	1.7	5.82	H051	100LR6	2500
163.3	63	2.8	5.82	H061	100LR6	3700
161.6	64	1.6	5.82	H051	90L6	2500
161.6	64	2.8	5.82	H061	90L6	3700
159.0	63	2.0	8.87	H032	80D4	4273
158.2	64	3.3	8.91	H042	80D4	5614
157.9	64	2.0	8.87	H032	90S4	4280
157.1	64	3.3	8.91	H042	90S4	5625
155.5	63	2.4	18.20	H032	80B2	4319
152.7	67	3.8	6.22	HA52	100LR6	3446
152.5	67	1.7	6.23	H032	100LR6	4307
149.5	65	2.9	19.00	H042	80B2	5719
149.5	68	3.7	6.22	HA52	90L6	3471
149.3	68	1.6	6.23	H032	90L6	4327
144.2	71	2.1	6.52	HA42	90L6	2810
142.7	68	2.2	19.90	H032	80B2	4403
139.7	70	1.6	20.26	HA42	80B2	2840
139.0	73	1.9	10.14	H032	80D4	4402

5.1 H/HA MOTORREDUCTORES (50Hz)

1.10 kW

n2 [rpm]	M2 [Nm]	fs	i	Reductor	Motor	Fr2 [N]
138.8	70	3.1	20.46	HA52	80B2	3558
138.0	73	1.9	10.14	H032	90S4	4409
136.7	74	3.3	10.31	H042	80D4	5835
135.7	74	3.2	10.31	H042	90S4	5845
135.2	72	2.6	21.00	H042	80B2	5873
132.2	77	2.2	7.19	H042	100LR6	5879
132.2	77	0.9	10.67	HA61	80D4	4096
131.3	78	0.9	10.67	HA61	90S4	4106
129.5	79	2.2	7.33	H061	100LR6	3700
129.4	79	2.1	7.19	H042	90L6	5912
128.9	78	1.2	10.94	HA32	80D4	1386
128.9	78	1.9	10.94	HA42	80D4	2917
128.0	79	1.9	10.94	HA42	90S4	2924
126.8	81	1.3	7.33	H051	90L6	2500
126.8	81	2.2	7.33	H061	90L6	3700
125.2	78	1.9	22.68	H032	80B2	4529
122.8	83	3.0	7.73	HA52	100LR6	3705
122.4	83	1.6	7.76	H032	100LR6	4513
122.3	80	2.4	23.15	H042	80B2	6028
120.9	83	3.4	11.67	HA52	80D4	3726
120.3	85	3.0	7.73	HA52	90L6	3732
120.0	84	3.3	11.67	HA52	90S4	3735
120.0	86	1.1	7.75	HA61	90L6	4230
119.9	84	1.7	11.76	H032	80D4	4540
119.8	85	1.5	7.76	H032	90L6	4532
119.5	84	3.0	11.80	H042	80D4	6039
119.2	82	1.8	23.83	H032	80B2	4576
119.0	85	1.7	11.76	H032	90S4	4547
118.6	85	2.9	11.80	H042	90S4	6050
115.7	84	1.4	24.55	HA42	80B2	3024
114.7	89	1.5	8.11	HA42	90L6	3033
113.4	91	2.0	8.38	H061	100LR6	3700
111.7	87	2.4	25.43	HA52	80B2	3825
111.7	87	3.7	25.43	HA62	80B2	5646
111.4	91	3.9	8.53	H052	100LR6	7918
111.0	93	1.1	8.38	H051	90L6	2500
111.0	93	1.9	8.38	H061	90L6	3700
110.1	93	3.9	8.44	H081	90L6	4000
109.1	93	3.8	8.53	H052	90L6	7965
108.7	90	2.2	26.04	H042	80B2	6211
107.2	91	1.7	26.39	H032	80B2	4674
107.1	95	1.4	8.87	H032	100LR6	4631
106.6	96	2.3	8.91	H042	100LR6	6205
106.4	95	0.8	13.25	HA32	80D4	1477
106.4	95	1.5	13.25	HA42	80D4	3110

5.1 H/HA MOTORREDUCTORES (50Hz)

1.10 kW

n2 [rpm]	M2 [Nm]	fs	i	Reductor	Motor	Fr2 [N]
105.7	95	1.5	13.25	HA42	90S4	3117
104.9	97	1.4	8.87	H032	90L6	4649
104.3	98	2.3	8.91	H042	90L6	6238
103.9	97	2.6	13.57	H042	80D4	6252
103.2	98	2.6	13.57	H042	90S4	6263
102.9	95	2.2	27.50	H042	80B2	6295
102.8	98	1.7	13.72	H032	80D4	4677
102.0	99	1.7	13.72	H032	90S4	4683
99.5	98	3.8	28.44	H052	80B2	8000
99.3	103	3.8	9.56	H052	100LR6	8000
98.5	103	3.0	9.64	HA52	100LR6	3988
97.3	105	3.7	9.56	H052	90L6	8000
97.2	104	2.7	14.50	HA52	80D4	4006
96.6	104	2.7	14.50	HA52	90S4	4015
96.4	106	3.0	9.64	HA52	90L6	4017
96.2	105	1.6	14.66	H032	80D4	4733
95.6	102	1.5	29.70	H032	80B2	4776
95.5	106	1.6	14.66	H032	90S4	4739
94.7	103	2.2	29.89	HA52	80B2	4042
94.7	103	3.3	29.89	HA62	80B2	5965
93.7	109	1.4	10.14	H032	100LR6	4744
93.0	105	1.0	30.55	HA42	80B2	3253
92.9	105	2.0	30.45	H042	80B2	6454
92.1	111	2.3	10.31	H042	100LR6	6426
91.7	111	1.3	10.14	H032	90L6	4761
90.2	113	2.2	10.31	H042	90L6	6458
90.1	108	3.4	31.52	H052	80B2	8000
88.3	114	2.2	15.96	H042	80D4	6499
87.7	115	2.2	15.96	H042	90S4	6509
86.3	113	1.3	32.89	H032	80B2	4862
86.1	113	3.2	33.00	H052	80B2	8000
85.5	118	1.2	16.49	HA42	80D4	3345
85.0	119	3.8	16.59	H052	80D4	8000
85.0	120	1.3	10.94	HA42	90L6	3351
84.9	119	1.2	16.49	HA42	90S4	3353
84.4	120	3.8	16.59	H052	90S4	8000
84.1	120	1.6	16.77	H032	80D4	4840
83.5	121	1.6	16.77	H032	90S4	4845
83.4	121	2.5	16.91	HA52	80D4	4217
83.3	117	1.8	34.10	H042	80B2	6600
82.8	122	2.5	16.91	HA52	90S4	4227
82.5	123	3.3	11.51	H052	100LR6	8000
81.4	125	2.4	11.67	HA52	100LR6	4250
81.4	125	3.7	11.67	HA62	100LR6	6273
80.8	126	1.2	11.76	H032	100LR6	4857

5.1 H/HA MOTORREDUCTORES (50Hz)

1.10 kW

n2 [rpm]	M2 [Nm]	fs	i	Reductor	Motor	Fr2 [N]
80.8	126	3.2	11.51	H052	90L6	8000
80.5	127	2.1	11.80	H042	100LR6	6600
79.7	128	2.3	11.67	HA52	90L6	4280
79.7	128	3.6	11.67	HA62	90L6	6317
79.1	129	1.2	11.76	H032	90L6	4873
78.8	129	2.0	11.80	H042	90L6	6600
78.5	124	1.8	36.17	HA52	80B2	4302
78.5	124	2.8	36.17	HA62	80B2	6349
78.3	129	3.6	18.00	H052	80D4	8000
77.8	130	3.5	18.00	H052	90S4	8000
77.5	130	1.5	18.20	H032	80D4	4900
76.9	131	1.5	18.20	H032	90S4	4905
74.9	130	1.2	37.92	H032	80B2	4973
74.9	130	1.6	37.76	H042	80B2	6600
74.2	136	1.8	19.00	H042	80D4	6600
73.7	137	1.8	19.00	H042	90S4	6600
72.9	134	2.8	38.98	H052	80B2	8000
70.9	142	1.4	19.90	H032	80D4	4961
70.6	143	3.2	19.97	H052	80D4	8000
70.4	143	1.4	19.90	H032	90S4	4965
70.2	145	1.0	13.25	HA42	90L6	3572
70.1	144	3.2	19.97	H052	90S4	8000
70.0	146	1.8	13.57	H042	100LR6	6600
69.6	145	1.0	20.26	HA42	80D4	3583
69.2	147	1.2	13.72	H032	100LR6	4960
69.1	146	1.0	20.26	HA42	90S4	3591
68.9	146	2.0	20.46	HA52	80D4	4493
68.9	146	3.1	20.46	HA62	80D4	6632
68.6	142	1.1	41.40	H032	80B2	5035
68.5	149	1.8	13.57	H042	90L6	6600
68.4	147	2.0	20.46	HA52	90S4	4504
68.4	147	3.1	20.46	HA62	90S4	6647
67.8	150	1.2	13.72	H032	90L6	4973
67.1	150	1.7	21.00	H042	80D4	6600
66.7	151	1.7	21.00	H042	90S4	6600
66.7	153	3.0	14.24	H052	100LR6	8000
65.5	155	1.9	14.50	HA52	100LR6	4569
65.5	155	2.8	14.50	HA62	100LR6	6744
65.3	156	2.9	14.24	H052	90L6	8000
65.1	155	3.0	21.67	H052	80D4	8000
64.9	150	1.4	43.75	H042	80B2	6600
64.8	157	1.1	14.66	H032	100LR6	4999
64.6	156	3.0	21.67	H052	90S4	8000
64.1	159	1.9	14.50	HA52	90L6	4602
64.1	159	2.8	14.50	HA62	90L6	6792

5.1 H/HA MOTORREDUCTORES (50Hz)

1.10 kW

n2 [rpm]	M2 [Nm]	fs	i	Reductor	Motor	Fr2 [N]
63.5	161	1.1	14.66	H032	90L6	5011
63.0	155	1.4	44.95	HA52	80B2	4630
63.0	155	2.1	44.95	HA62	80B2	6834
62.4	156	2.4	45.36	H052	80B2	8000
62.2	162	1.2	22.68	H032	80D4	5038
61.7	163	1.2	22.68	H032	90S4	5042
60.9	166	1.6	23.15	H042	80D4	6600
60.5	167	1.6	23.15	H042	90S4	6600
59.7	163	1.3	47.53	H042	80B2	6600
59.5	171	1.5	15.96	H042	100LR6	6600
59.2	170	1.2	23.83	H032	80D4	5063
58.7	172	1.2	23.83	H032	90S4	5067
58.3	175	1.5	15.96	H042	90L6	6600
57.6	169	2.2	49.13	H052	80B2	8000
57.4	176	0.9	24.55	HA42	80D4	3819
57.3	178	2.7	16.59	H052	100LR6	8000
57.1	177	2.7	24.71	H052	80D4	8000
57.1	171	1.3	49.78	HA52	80B2	4785
57.1	171	1.6	49.78	HA62	80B2	7062
57.0	177	0.9	24.55	HA42	90S4	3828
56.8	168	1.3	49.80	HA53	80B2	4791
56.8	168	2.1	49.80	HA63	80B2	7072
56.7	180	1.1	16.77	H032	100LR6	5065
56.7	178	2.6	24.71	H052	90S4	8000
56.4	181	0.8	16.49	HA42	90L6	3843
56.2	181	1.7	16.91	HA52	100LR6	4810
56.2	181	2.9	16.91	HA62	100LR6	7099
56.0	182	2.6	16.59	H052	90L6	8000
55.5	184	1.1	16.77	H032	90L6	5074
55.4	182	1.5	25.43	HA52	80D4	4831
55.4	182	2.4	25.43	HA62	80D4	7130
55.1	183	1.5	25.43	HA52	90S4	4842
55.1	183	2.3	25.43	HA62	90S4	7147
55.0	185	1.7	16.91	HA52	90L6	4844
55.0	185	2.8	16.91	HA62	90L6	7150
54.1	186	1.4	26.04	H042	80D4	6600
53.9	187	2.6	26.18	H052	80D4	8000
53.8	188	1.4	26.04	H042	90S4	6600
53.5	189	2.6	26.18	H052	90S4	8000
53.4	189	1.1	26.39	H032	80D4	5107
53.0	190	1.1	26.39	H032	90S4	5110
52.8	193	2.5	18.00	H052	100LR6	8000
52.2	195	1.1	18.20	H032	100LR6	5095
52.2	187	1.1	54.25	H042	80B2	6600
51.7	197	2.5	18.00	H052	90L6	8000

5.1 H/HA MOTORREDUCTORES (50Hz)

1.10 kW

n2 [rpm]	M2 [Nm]	fs	i	Reductor	Motor	Fr2 [N]
51.3	197	1.4	27.50	H042	80D4	6600
51.1	199	1.1	18.20	H032	90L6	5102
50.9	198	1.4	27.50	H042	90S4	6600
50.4	193	1.9	56.11	H052	80B2	8000
50.0	204	1.3	19.00	H042	100LR6	6600
49.6	203	2.4	28.44	H052	80D4	8000
49.2	205	2.4	28.44	H052	90S4	8000
48.9	208	1.3	19.00	H042	90L6	6600
48.1	198	1.9	58.81	H053	80B2	8000
48.1	210	3.8	29.33	H062	80D4	12000
47.7	211	3.8	29.33	H062	90S4	12000
47.6	214	2.3	19.97	H052	100LR6	8000
47.5	212	0.9	29.70	H032	80D4	5142
47.2	214	1.4	29.89	HA52	80D4	5098
47.2	214	2.1	29.89	HA62	80D4	7525
47.1	214	0.9	29.70	H032	90S4	5144
47.0	203	1.1	60.25	HA53	80B2	5105
47.0	203	1.8	60.25	HA63	80B2	7535
46.8	215	1.4	29.89	HA52	90S4	5110
46.8	215	2.1	29.89	HA62	90S4	7543
46.7	218	1.0	19.90	H032	90L6	5123
46.6	219	2.2	19.97	H052	90L6	8000
46.4	219	1.4	20.46	HA52	100LR6	5125
46.4	219	2.2	20.46	HA62	100LR6	7565
46.3	218	1.3	30.45	H042	80D4	6600
46.0	219	1.3	30.45	H042	90S4	6600
45.8	208	1.1	61.83	H043	80B2	6600
45.7	213	1.0	61.87	HA52	80B2	5151
45.7	213	1.6	61.87	HA62	80B2	7602
45.5	224	1.4	20.46	HA52	90L6	5162
45.5	224	2.2	20.46	HA62	90L6	7618
45.2	225	1.2	21.00	H042	100LR6	6600
44.7	225	2.2	31.52	H052	80D4	8000
44.4	227	2.2	31.52	H052	90S4	8000
44.3	230	1.1	21.00	H042	90L6	6600
44.1	229	3.7	32.00	H062	80D4	12000
43.8	232	2.1	21.67	H052	100LR6	8000
43.8	231	3.7	32.00	H062	90S4	12000
42.9	237	2.1	21.67	H052	90L6	8000
42.7	236	2.1	33.00	H052	80D4	8000
42.4	238	2.1	33.00	H052	90S4	8000
41.3	244	1.1	34.10	H042	80D4	6600
41.1	246	1.1	34.10	H042	90S4	6600
40.8	250	3.6	23.27	H062	100LR6	12000
40.2	253	1.1	23.15	H042	90L6	6600

5.1 H/HA MOTORREDUCTORES (50Hz)

1.10 kW

n2 [rpm]	M2 [Nm]	fs	i	Reductor	Motor	Fr2 [N]
40.0	255	3.5	23.27	H062	90L6	12000
39.0	259	1.2	36.17	HA52	80D4	5432
39.0	259	1.8	36.17	HA62	80D4	8000
38.9	245	1.5	72.75	H053	80B2	8000
38.7	261	1.2	36.17	HA52	90S4	5445
38.7	261	1.8	36.17	HA62	90S4	8000
38.5	265	1.9	24.71	H052	100LR6	8000
38.1	265	3.0	36.99	H062	80D4	12000
37.8	266	3.0	36.99	H062	90S4	12000
37.8	252	0.9	74.88	HA53	80B2	5489
37.8	252	1.4	74.88	HA63	80B2	8000
37.6	271	1.8	24.71	H052	90L6	8000
37.4	273	1.1	25.43	HA52	100LR6	5510
37.4	273	1.7	25.43	HA62	100LR6	8000
37.3	270	1.0	37.76	H042	80D4	6600
37.1	272	1.0	37.76	H042	90S4	6600
37.0	276	3.2	25.70	H062	100LR6	12000
36.6	279	1.1	25.43	HA52	90L6	5549
36.6	279	1.6	25.43	HA62	90L6	8000
36.5	279	1.0	26.04	H042	100LR6	6600
36.3	281	1.8	26.18	H052	100LR6	8000
36.2	279	1.8	38.98	H052	80D4	8000
36.2	281	3.2	25.70	H062	90L6	12000
35.9	281	1.7	38.98	H052	90S4	8000
35.7	285	1.0	26.04	H042	90L6	6600
35.5	287	1.8	26.18	H052	90L6	8000
35.0	288	2.9	40.33	H062	80D4	12000
34.7	291	2.9	40.33	H062	90S4	12000
33.8	301	1.0	27.50	H042	90L6	6600
33.4	305	1.7	28.44	H052	100LR6	8000
33.0	289	2.2	85.82	H063	80B2	12000
32.7	309	0.9	43.75	H042	90S4	6600
32.7	311	1.7	28.44	H052	90L6	8000
32.4	315	2.7	29.33	H062	100LR6	12000
32.2	296	1.2	88.02	HA63	80B2	8000
31.7	321	2.6	29.33	H062	90L6	12000
31.4	321	0.9	44.95	HA52	80D4	5841
31.4	321	1.4	44.95	HA62	80D4	8000
31.3	305	1.2	90.51	H053	80B2	8000
31.1	324	1.5	45.36	H052	80D4	8000
31.1	327	1.0	29.89	HA52	90L6	5857
31.1	324	0.9	44.95	HA52	90S4	5855
31.1	327	1.4	29.89	HA62	90L6	8000
31.1	324	1.4	44.95	HA62	90S4	8000
30.9	327	1.5	45.36	H052	90S4	8000

5.1 H/HA MOTORREDUCTORES (50Hz)

1.10 kW

n2 [rpm]	M2 [Nm]	fs	i	Reductor	Motor	Fr2 [N]
30.6	329	2.6	46.06	H062	80D4	12000
30.4	332	2.6	46.06	H062	90S4	12000
30.1	338	1.5	31.52	H052	100LR6	8000
29.9	319	2.0	94.76	H063	80B2	12000
29.7	343	2.6	32.00	H062	100LR6	12000
29.5	345	1.5	31.52	H052	90L6	8000
29.1	350	2.5	32.00	H062	90L6	12000
28.7	351	1.4	49.13	H052	80D4	8000
28.5	354	1.4	49.13	H052	90S4	8000
28.3	349	2.4	49.45	H063	90S4	12000
28.3	356	0.8	49.78	HA52	80D4	6000
28.3	349	0.9	49.80	HA53	80D4	6000
28.3	356	1.0	49.78	HA62	80D4	8000
28.3	349	1.4	49.80	HA63	80D4	8000
28.2	361	1.4	33.00	H052	90L6	8000
28.1	359	0.8	49.78	HA52	90S4	6000
28.1	351	0.9	49.80	HA53	90S4	6000
28.1	359	1.0	49.78	HA62	90S4	8000
28.1	351	1.4	49.80	HA63	90S4	8000
26.0	367	1.0	108.95	H053	80B2	8000
26.0	392	0.8	36.17	HA52	90L6	6000
25.7	397	2.1	36.99	H062	100LR6	12000
25.7	396	1.2	36.17	HA62	90L6	8000
25.6	385	2.2	54.61	H063	90S4	12000
25.1	401	1.2	56.11	H052	80D4	8000
25.1	405	2.1	36.99	H062	90L6	12000
25.1	380	3.6	112.78	H083	80B2	18000
24.9	404	1.2	56.11	H052	90S4	8000
24.4	418	1.2	38.98	H052	100LR6	8000
24.0	412	1.2	58.81	H053	80D4	8000
24.0	397	1.6	118.00	H063	80B2	12000
24.0	424	4.0	38.70	H082	90L6	18000
23.9	427	1.2	38.98	H052	90L6	8000
23.8	415	1.2	58.81	H053	90S4	8000
23.6	432	2.1	40.33	H062	100LR6	12000
23.4	422	1.1	60.25	HA63	80D4	8000
23.2	425	1.1	60.25	HA63	90S4	8000
23.1	442	2.0	40.33	H062	90L6	12000
22.8	442	1.0	61.87	HA62	80D4	8000
22.7	419	3.2	124.44	H083	80B2	18000
22.6	446	1.0	61.87	HA62	90S4	8000
22.2	458	3.7	42.75	H082	100LR6	18000
21.8	468	3.6	42.75	H082	90L6	18000
20.9	456	1.4	135.40	H063	80B2	12000
20.7	492	0.9	44.95	HA62	90L6	8000

5.1 H/HA MOTORREDUCTORES (50Hz)

1.10 kW

n2 [rpm]	M2 [Nm]	fs	i	Reductor	Motor	Fr2 [N]
20.6	494	1.8	46.06	H062	100LR6	12000
20.6	480	1.8	68.00	H063	90S4	12000
20.5	497	1.0	45.36	H052	90L6	8000
20.2	504	1.8	46.06	H062	90L6	12000
19.9	479	2.8	142.15	H083	80B2	18000
19.7	516	3.3	48.13	H082	100LR6	18000
19.7	501	3.6	71.48	H083	80D4	18000
19.6	504	3.6	71.48	H083	90S4	18000
19.4	509	1.0	72.75	H053	80D4	8000
19.3	527	3.2	48.13	H082	90L6	18000
19.2	513	1.0	72.75	H053	90S4	8000
19.2	519	1.7	49.45	H063	100LR6	12000
18.9	538	1.0	49.13	H052	90L6	8000
18.9	503	1.3	149.51	H063	80B2	12000
18.8	530	1.7	49.45	H063	90L6	12000
18.8	524	0.9	74.88	HA63	80D4	8000
18.7	534	0.9	49.80	HA63	90L6	8000
18.7	528	0.9	74.88	HA63	90S4	8000
18.3	521	2.6	154.76	H083	80B2	18000
17.9	552	3.3	78.87	H083	80D4	18000
17.8	556	3.2	78.87	H083	90S4	18000
17.4	573	1.6	54.61	H063	100LR6	12000
17.4	547	2.5	162.35	H083	80B2	18000
17.0	586	1.5	54.61	H063	90L6	12000
16.8	593	2.8	56.53	H083	100LR6	18000
16.6	575	1.1	170.67	H063	80B2	12000
16.5	606	2.8	56.53	H083	90L6	18000
16.5	599	3.0	85.56	H083	80D4	18000
16.4	601	1.4	85.82	H063	80D4	12000
16.4	603	3.0	85.56	H083	90S4	18000
16.3	605	1.4	85.82	H063	90S4	12000
15.8	603	2.2	179.13	H083	80B2	18000
15.2	627	1.0	186.18	H063	80B2	12000
14.9	664	1.3	94.76	H063	80D4	12000
14.8	668	1.3	94.76	H063	90S4	12000
14.5	657	2.1	195.07	H083	80B2	18000
14.4	687	2.6	98.09	H083	80D4	18000
14.3	692	2.6	98.09	H083	90S4	18000
14.0	714	1.3	68.00	H063	100LR6	12000
13.7	729	1.2	68.00	H063	90L6	12000
13.3	750	2.5	71.48	H083	100LR6	18000
13.0	767	2.5	71.48	H083	90L6	18000
12.7	750	1.8	222.78	H083	80B2	18000
12.5	790	2.3	112.78	H083	80D4	18000
12.4	796	2.3	112.78	H083	90S4	18000

5.1 H/HA MOTORREDUCTORES (50Hz)

1.10 kW

n2 [rpm]	M2 [Nm]	fs	i	Reductor	Motor	Fr2 [N]
12.0	828	2.3	78.87	H083	100LR6	18000
11.9	826	1.0	118.00	H063	80D4	12000
11.9	832	1.0	118.00	H063	90S4	12000
11.8	846	2.2	78.87	H083	90L6	18000
11.3	872	2.1	124.44	H083	80D4	18000
11.3	878	2.1	124.44	H083	90S4	18000
11.1	901	1.0	85.82	H063	100LR6	12000
11.1	898	2.1	85.56	H083	100LR6	18000
10.9	918	2.1	85.56	H083	90L6	18000
10.8	920	1.0	85.82	H063	90L6	12000
10.6	935	0.9	135.40	H063	90S4	12000
10.2	980	3.7	93.36	H103	100LR6	22000
9.9	996	1.8	142.15	H083	80D4	18000
9.8	1003	1.8	142.15	H083	90S4	18000
9.8	1012	3.5	143.42	H103	90S4	22000
9.7	1030	1.8	98.09	H083	100LR6	18000
9.5	1052	1.8	98.09	H083	90L6	18000
9.5	1051	3.5	100.07	H103	100LR6	22000
9.1	1084	1.7	154.76	H083	80D4	18000
9.0	1092	1.6	154.76	H083	90S4	18000
8.7	1137	1.6	162.35	H083	80D4	18000
8.7	1134	3.1	160.82	H103	90S4	22000
8.6	1145	1.6	162.35	H083	90S4	18000
8.4	1184	1.6	112.78	H083	100LR6	18000
8.2	1210	1.6	112.78	H083	90L6	18000
7.9	1255	1.4	179.13	H083	80D4	18000
7.9	1269	2.9	120.84	H103	100LR6	22000
7.8	1263	1.4	179.13	H083	90S4	18000
7.7	1277	2.7	181.07	H103	90S4	22000
7.6	1306	1.4	124.44	H083	100LR6	18000
7.5	1335	1.4	124.44	H083	90L6	18000
7.4	1346	3.9	128.18	H123	100LR6	30000
7.2	1366	1.3	195.07	H083	80D4	18000
7.2	1376	1.3	195.07	H083	90S4	18000
7.2	1370	2.6	194.21	H103	90S4	22000
7.1	1407	2.6	134.06	H103	100LR6	22000
6.7	1492	1.3	142.15	H083	100LR6	18000
6.6	1506	2.4	143.42	H103	100LR6	22000
6.6	1520	3.5	144.79	H123	100LR6	30000
6.5	1524	1.2	142.15	H083	90L6	18000
6.5	1538	2.4	143.42	H103	90L6	22000
6.5	1520	2.3	215.45	H103	90S4	22000
6.3	1560	1.2	222.78	H083	80D4	18000
6.3	1571	1.1	222.78	H083	90S4	18000
6.1	1625	1.2	154.76	H083	100LR6	18000

5.1 H/HA MOTORREDUCTORES (50Hz)

1.10 kW

n2 [rpm]	M2 [Nm]	fs	i	Reductor	Motor	Fr2 [N]
6.1	1630	3.2	155.22	H123	100LR6	30000
6.0	1660	1.1	154.76	H083	90L6	18000
5.9	1688	2.2	160.82	H103	100LR6	22000
5.8	1725	2.1	160.82	H103	90L6	22000
5.8	1711	2.1	242.59	H103	90S4	22000
5.7	1741	1.1	162.35	H083	90L6	18000
5.5	1814	2.9	172.80	H123	100LR6	30000
5.2	1921	1.0	179.13	H083	90L6	18000
5.2	1901	1.9	181.07	H103	100LR6	22000
5.1	1942	1.9	181.07	H103	90L6	22000
5.0	1986	2.6	189.19	H123	100LR6	30000
4.9	2039	1.8	194.21	H103	100LR6	22000
4.8	2092	0.9	195.07	H083	90L6	18000
4.8	2083	1.8	194.21	H103	90L6	22000
4.6	2178	2.4	207.43	H123	100LR6	30000
4.4	2262	1.6	215.45	H103	100LR6	22000
4.3	2311	1.6	215.45	H103	90L6	22000
4.1	2424	2.2	230.92	H123	100LR6	30000
3.9	2547	1.5	242.59	H103	100LR6	22000
3.8	2602	1.5	242.59	H103	90L6	22000
3.7	2726	1.9	259.64	H123	100LR6	30000

1.50 kW

n2 [rpm]	M2 [Nm]	fs	i	Reductor	Motor	Fr2 [N]
1996.5	7	2.8	1.44	H041	90S2	531
1954.8	7	2.7	1.44	H041	80C2	534
1940.2	7	2.7	1.45	HA41	80C2	406
1435.0	9	2.0	2.00	H041	90S2	584
1405.0	10	2.0	2.00	H041	80C2	587
1127.5	12	1.9	2.55	H041	90S2	624
1115.7	12	3.2	1.27	H051	90L4	1604
1103.9	12	1.9	2.55	H041	80C2	627
1102.0	12	1.2	2.55	HA31	80C2	484
1100.0	13	3.2	1.27	H051	90LA4	1611
1057.4	13	1.8	2.71	H041	90S2	634
1035.3	13	1.7	2.71	H041	80C2	638
987.8	14	1.8	1.44	H041	90L4	644
980.5	14	2.8	1.45	HA51	90L4	1403
974.7	14	2.2	2.94	HA51	90S2	1406
973.9	14	1.8	1.44	H041	90LA4	646
966.7	14	2.8	1.45	HA51	90LA4	1410
954.3	14	1.1	2.94	HA31	80C2	508
954.3	14	1.3	2.94	HA41	80C2	514

5.1 H/HA MOTORREDUCTORES (50Hz)

1.50 kW

n2 [rpm]	M2 [Nm]	fs	i	Reductor	Motor	Fr2 [N]
954.3	14	2.1	2.94	HA51	80C2	1416
924.2	15	2.1	3.11	H041	90S2	657
904.9	15	2.0	3.11	H041	80C2	661
887.4	15	4.0	3.17	H051	80C2	1722
799.8	17	2.0	3.59	H041	90S2	682
783.1	17	2.0	3.59	H041	80C2	686
778.3	17	3.9	3.69	H051	90S2	1792
762.0	18	3.8	3.69	H051	80C2	1804
738.6	19	2.2	1.27	H051	100L6	1817
730.7	19	2.2	1.27	H051	100LA6	1823
717.5	19	3.6	4.00	H051	90S2	1837
710.0	20	1.3	2.00	H041	90L4	700
702.5	19	3.5	4.00	H051	80C2	1848
700.0	20	1.3	2.00	H041	90LA4	702
683.3	20	1.7	4.20	H041	90S2	710
669.0	20	1.7	4.20	H041	80C2	713
668.2	21	2.9	2.13	H051	90L4	1873
662.3	21	3.0	1.42	H051	100L6	1877
658.8	21	2.8	2.13	H051	90LA4	1881
655.2	21	2.9	1.42	H051	100LA6	1883
647.7	21	4.0	4.38	HA61	90S2	2411
640.9	21	3.9	4.38	HA61	80C2	2420
611.2	22	3.3	4.70	H032	90S2	2938
604.2	22	1.7	4.75	HA51	90S2	1649
598.4	22	3.2	4.70	H032	80C2	2955
595.5	23	3.2	4.77	H051	90S2	1942
591.6	23	1.7	4.75	HA51	80C2	1661
589.2	23	3.1	4.77	H051	80C2	1948
568.0	24	1.4	5.00	H041	90S2	742
568.0	24	3.7	2.50	HA61	90L4	2519
562.0	24	1.4	5.00	H041	80C2	743
560.0	25	3.6	2.50	HA61	90LA4	2531
557.9	25	1.2	2.55	H041	90L4	741
552.2	25	2.8	2.57	H051	90L4	1982
550.0	25	1.2	2.55	H041	90LA4	743
546.7	25	3.1	5.25	H051	90S2	1991
544.4	26	2.7	2.57	H051	90LA4	1990
535.2	25	3.0	5.25	H051	80C2	2004
524.3	26	1.5	5.45	HA51	90S2	1729
523.2	27	1.1	2.71	H041	90L4	751
522.4	25	2.4	5.38	HA32	80C2	869
521.8	26	1.5	5.50	H041	90S2	756
515.8	27	1.1	2.71	H041	90LA4	754
515.2	26	1.4	5.45	HA51	80C2	1739
510.9	26	1.4	5.50	H041	80C2	760

5.1 H/HA MOTORREDUCTORES (50Hz)

1.50 kW

n2 [rpm]	M2 [Nm]	fs	i	Reductor	Motor	Fr2 [N]
493.3	27	2.8	5.82	H051	90S2	2052
483.0	28	2.7	5.82	H051	80C2	2065
482.3	29	1.4	2.94	HA51	90L4	1778
475.5	29	1.4	2.94	HA51	90LA4	1786
469.6	29	1.3	6.09	H041	90S2	774
461.3	29	1.3	6.09	H041	80C2	777
460.7	29	2.7	6.23	H032	90S2	3173
457.3	30	1.3	3.11	H041	90L4	773
451.1	29	2.7	6.23	H032	80C2	3191
450.8	31	1.3	3.11	H041	90LA4	775
448.4	31	2.6	3.17	H051	90L4	2105
442.4	32	2.0	2.13	H051	100L6	2112
442.4	32	4.0	2.13	H061	100L6	3363
442.1	31	2.5	3.17	H051	90LA4	2114
440.4	30	3.5	6.52	HA42	90S2	1937
437.6	32	2.0	2.13	H051	100LA6	2118
437.6	32	3.9	2.13	H061	100LA6	3374
431.2	31	1.9	6.52	HA32	80C2	927
431.2	31	3.4	6.52	HA42	80C2	1951
395.7	35	1.3	3.59	H041	90L4	796
395.1	34	3.6	7.19	H042	90S2	4263
391.0	34	3.5	7.19	H042	80C2	4276
390.2	36	1.3	3.59	H041	90LA4	798
387.3	35	2.2	7.33	H051	90S2	2200
387.3	35	3.7	7.33	H061	90S2	3506
385.1	36	2.5	3.69	H051	90L4	2198
383.2	35	2.1	7.33	H051	80C2	2207
383.2	35	3.6	7.33	H061	80C2	3517
379.7	37	2.5	3.69	H051	90LA4	2207
376.0	37	2.5	2.50	HA61	100L6	2891
374.3	36	1.0	7.67	H041	90S2	810
372.0	38	2.5	2.50	HA61	100LA6	2901
369.7	36	2.6	7.76	H032	90S2	3361
366.5	37	1.0	7.67	H041	80C2	814
366.5	37	1.8	7.75	HA61	90S2	2916
365.6	38	1.9	2.57	H051	100L6	2229
365.6	38	3.3	2.57	H061	100L6	3556
362.6	37	1.8	7.75	HA61	80C2	2926
362.0	37	2.6	7.76	H032	80C2	3379
361.7	39	1.9	2.57	H051	100LA6	2236
361.7	39	3.2	2.57	H061	100LA6	3567
355.0	39	2.3	4.00	H051	90L4	2249
355.0	39	3.8	4.00	H061	90L4	3588
353.9	38	2.6	8.11	HA42	90S2	2083
350.0	40	2.3	4.00	H051	90LA4	2258

5.1 H/HA MOTORREDUCTORES (50Hz)

1.50 kW

n2 [rpm]	M2 [Nm]	fs	i	Reductor	Motor	Fr2 [N]
350.0	40	3.8	4.00	H061	90LA4	3603
346.5	38	1.5	8.11	HA32	80C2	997
346.5	38	2.5	8.11	HA42	80C2	2098
339.1	40	1.9	8.38	H051	90S2	2284
339.1	40	3.2	8.38	H061	90S2	3644
338.1	41	1.1	4.20	H041	90L4	819
335.5	40	1.9	8.38	H051	80C2	2291
335.5	40	3.2	8.38	H061	80C2	3655
333.3	42	1.1	4.20	H041	90LA4	821
328.0	41	1.0	8.75	H041	90S2	830
323.9	43	2.6	4.38	HA61	90L4	3038
323.7	41	2.4	8.87	H032	90S2	3475
319.3	44	2.5	4.38	HA61	90LA4	3053
318.7	42	3.8	8.91	H042	90S2	4530
316.9	42	2.3	8.87	H032	80C2	3493
315.3	42	3.7	8.91	H042	80C2	4544
302.4	45	2.1	4.70	H032	90L4	3517
298.9	46	1.1	4.75	HA51	90L4	2085
298.1	46	2.1	4.70	H032	90LA4	3529
297.7	47	2.0	4.77	H051	90L4	2361
297.7	47	3.4	4.77	H061	90L4	3700
296.8	47	1.8	3.17	H051	100L6	2361
296.8	47	2.9	3.17	H061	100L6	3700
294.7	47	1.1	4.75	HA51	90LA4	2095
293.7	48	1.8	3.17	H051	100LA6	2368
293.7	48	2.9	3.17	H061	100LA6	3700
293.5	47	2.0	4.77	H051	90LA4	2370
293.5	47	3.4	4.77	H061	90LA4	3700
284.0	49	0.9	5.00	H041	90L4	843
282.9	47	2.2	10.14	H032	90S2	3591
280.0	50	0.9	5.00	H041	90LA4	844
278.3	48	3.8	10.31	H042	90S2	4703
277.0	48	2.2	10.14	H032	80C2	3609
272.4	49	3.7	10.31	H042	80C2	4730
270.5	51	1.9	5.25	H051	90L4	2423
270.5	51	3.3	5.25	H061	90L4	3700
269.1	50	1.1	10.67	HA61	90S2	3232
266.7	52	1.9	5.25	H051	90LA4	2432
266.7	52	3.3	5.25	H061	90LA4	3700
264.0	52	2.7	5.38	HA42	90L4	2297
263.4	51	1.0	10.67	HA61	80C2	3255
262.4	51	2.2	10.94	HA42	90S2	2302
260.3	53	2.6	5.38	HA42	90LA4	2308
260.3	53	0.9	5.45	HA51	90L4	2183
260.0	53	3.0	5.46	H042	90L4	4776

5.1 H/HA MOTORREDUCTORES (50Hz)

1.50 kW

n2 [rpm]	M2 [Nm]	fs	i	Reductor	Motor	Fr2 [N]
258.2	54	0.9	5.50	H041	90L4	854
256.9	52	1.3	10.94	HA32	80C2	1101
256.9	52	2.2	10.94	HA42	80C2	2318
256.7	54	0.9	5.45	HA51	90LA4	2194
256.3	54	3.0	5.46	H042	90LA4	4794
254.9	55	1.7	3.69	H051	100L6	2459
254.9	55	2.9	3.69	H061	100L6	3700
254.5	55	0.9	5.50	H041	90LA4	856
252.2	56	1.7	3.69	H051	100LA6	2466
252.2	56	2.8	3.69	H061	100LA6	3700
244.1	57	1.8	5.82	H051	90L4	2490
244.1	57	3.0	5.82	H061	90L4	3700
243.4	55	3.9	11.67	HA52	90S2	2950
243.2	55	2.0	11.76	H032	90S2	3720
243.2	55	3.4	11.80	H042	90S2	4878
240.9	55	3.8	11.67	HA52	80C2	2961
240.6	58	1.7	5.82	H051	90LA4	2500
240.6	58	2.9	5.82	H061	90LA4	3700
238.9	56	2.0	11.76	H032	80C2	3735
238.1	56	3.4	11.80	H042	80C2	4905
235.0	60	1.6	4.00	H051	100L6	2500
235.0	60	2.6	4.00	H061	100L6	3700
232.5	60	1.6	4.00	H051	100LA6	2500
232.5	60	2.6	4.00	H061	100LA6	3700
228.2	60	4.0	6.22	HA52	90L4	3014
228.0	60	1.7	6.23	H032	90L4	3753
225.0	61	3.9	6.22	HA52	90LA4	3029
224.7	61	1.7	6.23	H032	90LA4	3764
217.9	63	2.2	6.52	HA42	90L4	2449
214.8	64	2.2	6.52	HA42	90LA4	2461
214.4	65	1.8	4.38	HA61	100L6	3486
214.3	62	1.7	13.25	HA42	90S2	2462
212.1	63	1.7	13.25	HA42	80C2	2471
212.1	66	1.7	4.38	HA61	100LA6	3499
211.5	63	3.0	13.57	H042	90S2	5062
208.5	64	2.0	13.72	H032	90S2	3849
207.1	64	2.9	13.57	H042	80C2	5089
204.8	65	2.0	13.72	H032	80C2	3864
200.2	69	1.4	4.70	H032	100L6	3851
198.0	70	1.4	4.70	H032	100LA6	3859
197.6	70	2.3	7.19	H042	90L4	5131
197.1	71	1.4	4.77	H051	100L6	2500
197.1	71	2.4	4.77	H061	100L6	3700
195.9	68	3.1	14.50	HA52	90S2	3172
195.8	68	1.9	14.66	H032	90S2	3901

5.1 H/HA MOTORREDUCTORES (50Hz)

1.50 kW

n2 [rpm]	M2 [Nm]	fs	i	Reductor	Motor	Fr2 [N]
195.0	72	1.4	4.77	H051	100LA6	2500
195.0	72	2.3	4.77	H061	100LA6	3700
194.8	71	2.3	7.19	H042	90LA4	5150
193.8	68	3.1	14.50	HA52	80C2	3183
193.6	72	1.4	7.33	H051	90L4	2500
193.6	72	2.4	7.33	H061	90L4	3700
191.7	69	1.8	14.66	H032	80C2	3918
190.9	73	1.4	7.33	H051	90LA4	2500
190.9	73	2.3	7.33	H061	90LA4	3700
183.6	75	3.2	7.73	HA52	90L4	3241
183.2	76	1.2	7.75	HA61	90L4	3674
182.9	75	1.7	7.76	H032	90L4	3928
182.8	76	3.3	5.14	HA52	100L6	3246
181.0	76	3.2	7.73	HA52	90LA4	3256
180.8	77	3.3	5.14	HA52	100LA6	3257
180.6	77	1.2	7.75	HA61	90LA4	3691
180.4	76	1.6	7.76	H032	90LA4	3939
179.0	78	1.3	5.25	H051	100L6	2500
179.0	78	2.3	5.25	H061	100L6	3700
177.9	75	2.5	15.96	H042	90S2	5291
177.1	79	1.3	5.25	H051	100LA6	2500
177.1	79	2.3	5.25	H061	100LA6	3700
176.1	75	2.5	15.96	H042	80C2	5305
175.1	79	1.7	8.11	HA42	90L4	2634
173.5	77	1.4	16.49	HA42	90S2	2642
172.6	80	1.6	8.11	HA42	90LA4	2647
172.1	81	2.1	5.46	H042	100L6	5305
171.2	78	1.8	16.77	H032	90S2	4008
170.4	78	1.3	16.49	HA42	80C2	2658
170.3	82	2.1	5.46	H042	100LA6	5319
169.6	82	1.2	8.38	H051	90L4	2500
169.6	82	2.1	8.38	H061	90L4	3700
167.9	79	2.8	16.91	HA52	90S2	3339
167.6	79	1.8	16.77	H032	80C2	4025
167.2	83	1.2	8.38	H051	90LA4	2500
167.2	83	2.0	8.38	H061	90LA4	3700
166.2	80	2.8	16.91	HA52	80C2	3351
164.1	85	3.2	5.73	H052	100L6	6940
162.4	86	3.2	5.73	H052	100LA6	6961
161.6	87	1.2	5.82	H051	100L6	2500
161.6	87	2.1	5.82	H061	100L6	3700
160.2	86	1.5	8.87	H032	90L4	4028
159.8	88	1.2	5.82	H051	100LA6	2500
159.8	88	2.0	5.82	H061	100LA6	3700
159.3	86	2.4	8.91	H042	90L4	5413

5.1 H/HA MOTORREDUCTORES (50Hz)

1.50 kW

n2 [rpm]	M2 [Nm]	fs	i	Reductor	Motor	Fr2 [N]
157.9	87	1.5	8.87	H032	90LA4	4039
157.1	88	2.4	8.91	H042	90LA4	5431
156.0	85	1.8	18.20	H032	90S2	4079
154.5	91	3.9	6.08	H081	100L6	4000
154.4	86	1.7	18.20	H032	80C2	4087
152.9	92	3.9	6.08	H081	100LA6	4000
151.1	92	2.7	6.22	HA52	100L6	3459
150.9	92	1.2	6.23	H032	100L6	4062
149.5	89	2.1	19.00	H042	90S2	5523
149.5	93	2.7	6.22	HA52	100LA6	3471
149.3	93	1.2	6.23	H032	100LA6	4069
148.5	93	4.0	9.56	H052	90L4	7139
147.9	90	2.1	19.00	H042	80C2	5537
147.3	93	3.2	9.64	HA52	90L4	3488
146.4	94	3.9	9.56	H052	90LA4	7166
145.2	95	3.2	9.64	HA52	90LA4	3505
143.2	93	3.7	19.97	H052	90S2	7232
142.7	93	1.6	19.90	H032	90S2	4145
141.2	94	1.6	19.90	H032	80C2	4153
140.7	94	3.7	19.97	H052	80C2	7267
140.2	95	1.2	20.26	HA42	90S2	2837
140.0	98	1.4	10.14	H032	90L4	4123
138.8	96	2.3	20.46	HA52	90S2	3558
138.8	96	3.6	20.46	HA62	90S2	5251
138.7	96	1.2	20.26	HA42	80C2	2847
138.0	100	1.4	10.14	H032	90LA4	4133
137.7	100	2.4	10.31	H042	90L4	5603
137.3	97	2.3	20.46	HA52	80C2	3570
137.3	97	3.6	20.46	HA62	80C2	5270
136.4	102	3.0	6.89	H052	100L6	7298
135.7	101	2.4	10.31	H042	90LA4	5621
135.2	98	1.9	21.00	H042	90S2	5656
134.9	103	3.0	6.89	H052	100LA6	7319
133.8	99	1.9	21.00	H042	80C2	5670
132.0	101	3.5	21.67	H052	90S2	7393
130.8	106	1.6	7.19	H042	100L6	5660
129.8	106	1.4	10.94	HA42	90L4	2910
129.7	102	3.4	21.67	H052	80C2	7428
129.4	107	1.6	7.19	H042	100LA6	5674
128.2	109	1.6	7.33	H061	100L6	3700
128.0	107	1.4	10.94	HA42	90LA4	2924
126.8	111	1.6	7.33	H061	100LA6	3700
125.3	112	3.3	7.50	H081	100L6	4000
125.2	106	1.4	22.68	H032	90S2	4236
124.0	113	3.2	7.50	H081	100LA6	4000

5.1 H/HA MOTORREDUCTORES (50Hz)

1.50 kW

n2 [rpm]	M2 [Nm]	fs	i	Reductor	Motor	Fr2 [N]
123.9	107	1.4	22.68	H032	80C2	4243
123.4	111	3.5	11.51	H052	90L4	7502
122.7	108	1.8	23.15	H042	90S2	5783
121.7	113	2.5	11.67	HA52	90L4	3717
121.7	113	3.9	11.67	HA62	90L4	5486
121.6	113	3.4	11.51	H052	90LA4	7530
121.6	114	2.2	7.73	HA52	100L6	3719
121.6	114	3.5	7.73	HA62	100L6	5489
121.4	109	1.8	23.15	H042	80C2	5797
121.1	115	1.1	7.76	H032	100L6	4204
120.7	114	1.3	11.76	H032	90L4	4218
120.3	114	2.2	11.80	H042	90L4	5776
120.3	115	2.2	7.73	HA52	100LA6	3732
120.3	115	3.5	7.73	HA62	100LA6	5508
120.0	111	1.4	23.83	H032	90S2	4263
120.0	115	2.4	11.67	HA52	90LA4	3735
120.0	115	3.8	11.67	HA62	90LA4	5512
119.8	116	1.1	7.76	H032	100LA6	4210
119.0	116	1.3	11.76	H032	90LA4	4226
118.6	116	2.2	11.80	H042	90LA4	5794
117.9	113	1.3	23.83	H032	80C2	4274
115.8	115	3.1	24.71	H052	90S2	7656
115.7	115	1.0	24.55	HA42	90S2	3024
114.5	116	1.0	24.55	HA42	80C2	3035
113.7	117	3.0	24.71	H052	80C2	7692
112.2	125	1.4	8.38	H061	100L6	3700
111.7	119	1.8	25.43	HA52	90S2	3825
111.7	119	2.7	25.43	HA62	90S2	5646
111.3	126	2.9	8.44	H081	100L6	4000
111.0	126	1.4	8.38	H061	100LA6	3700
110.5	120	1.7	25.43	HA52	80C2	3839
110.5	120	2.7	25.43	HA62	80C2	5666
110.2	126	2.8	8.53	H052	100L6	7717
110.1	127	2.9	8.44	H081	100LA6	4000
109.1	122	1.6	26.04	H042	90S2	5936
109.1	127	2.8	8.53	H052	100LA6	7738
108.5	122	3.0	26.18	H052	90S2	7787
107.9	123	1.6	26.04	H042	80C2	5950
107.6	123	1.2	26.39	H032	90S2	4329
107.3	124	3.0	26.18	H052	80C2	7809
107.2	128	1.1	13.25	HA42	90L4	3102
106.5	125	1.2	26.39	H032	80C2	4335
106.0	131	1.0	8.87	H032	100L6	4277
105.7	130	1.1	13.25	HA42	90LA4	3117
105.5	132	1.7	8.91	H042	100L6	5930

5.1 H/HA MOTORREDUCTORES (50Hz)

1.50 kW

n2 [rpm]	M2 [Nm]	fs	i	Reductor	Motor	Fr2 [N]
104.9	132	1.0	8.87	H032	100LA6	4282
104.6	131	1.9	13.57	H042	90L4	5951
104.3	133	1.7	8.91	H042	100LA6	5943
103.5	133	1.3	13.72	H032	90L4	4302
103.3	129	1.6	27.50	H042	90S2	6006
103.2	133	1.9	13.57	H042	90LA4	5968
102.2	130	1.6	27.50	H042	80C2	6019
102.0	135	1.3	13.72	H032	90LA4	4309
99.9	133	2.8	28.44	H052	90S2	7955
99.7	138	3.1	14.24	H052	90L4	7925
98.8	134	2.7	28.44	H052	80C2	7976
98.3	141	2.7	9.56	H052	100L6	7945
98.3	140	3.1	14.24	H052	90LA4	7954
97.9	140	2.0	14.50	HA52	90L4	3996
97.9	140	3.0	14.50	HA62	90L4	5898
97.5	142	2.2	9.64	HA52	100L6	4002
97.5	142	3.4	9.64	HA62	100L6	5908
97.3	143	2.7	9.56	H052	100LA6	7966
96.9	142	1.2	14.66	H032	90L4	4333
96.6	142	2.0	14.50	HA52	90LA4	4015
96.6	142	2.9	14.50	HA62	90LA4	5926
96.4	144	2.2	9.64	HA52	100LA6	4017
96.4	144	3.4	9.64	HA62	100LA6	5929
95.6	139	1.1	29.70	H032	90S2	4391
95.5	144	1.2	14.66	H032	90LA4	4339
95.0	140	1.6	29.89	HA52	90S2	4037
95.0	140	2.4	29.89	HA62	90S2	5958
94.6	140	1.1	29.70	H032	80C2	4396
94.0	141	1.6	29.89	HA52	80C2	4051
94.0	141	2.4	29.89	HA62	80C2	5980
93.3	142	1.5	30.45	H042	90S2	6133
92.7	150	1.0	10.14	H032	100L6	4336
92.3	144	1.5	30.45	H042	80C2	6146
91.7	151	1.0	10.14	H032	100LA6	4341
91.1	152	1.7	10.31	H042	100L6	6105
90.2	154	1.6	10.31	H042	100LA6	6118
90.1	147	2.5	31.52	H052	90S2	8000
89.2	149	2.5	31.52	H052	80C2	8000
89.0	155	1.6	15.96	H042	90L4	6146
87.7	157	1.6	15.96	H042	90LA4	6163
86.1	154	2.4	33.00	H052	90S2	8000
86.1	160	0.9	16.49	HA42	90L4	3337
85.6	161	2.8	16.59	H052	90L4	8000
85.2	156	2.4	33.00	H052	80C2	8000
84.9	162	0.9	16.49	HA42	90LA4	3353

5.1 H/HA MOTORREDUCTORES (50Hz)

1.50 kW

n2 [rpm]	M2 [Nm]	fs	i	Reductor	Motor	Fr2 [N]
84.7	162	1.2	16.77	H032	90L4	4384
84.4	163	2.8	16.59	H052	90LA4	8000
84.0	164	1.8	16.91	HA52	90L4	4207
84.0	164	3.1	16.91	HA62	90L4	6209
83.5	165	1.2	16.77	H032	90LA4	4389
83.3	159	1.3	34.10	H042	90S2	6270
82.8	166	1.8	16.91	HA52	90LA4	4227
82.8	166	3.0	16.91	HA62	90LA4	6238
82.4	161	1.3	34.10	H042	80C2	6283
81.7	170	2.4	11.51	H052	100L6	8000
80.8	172	2.4	11.51	H052	100LA6	8000
80.6	172	1.7	11.67	HA52	100L6	4265
80.6	172	2.7	11.67	HA62	100L6	6295
80.4	173	4.0	11.69	H062	100L6	12000
79.7	174	1.5	11.80	H042	100L6	6258
79.7	174	1.7	11.67	HA52	100LA6	4280
79.7	174	2.7	11.67	HA62	100LA6	6317
79.6	175	3.9	11.69	H062	100LA6	12000
78.9	174	2.6	18.00	H052	90L4	8000
78.8	176	1.5	11.80	H042	100LA6	6270
78.5	169	1.3	36.17	HA52	90S2	4302
78.5	169	2.1	36.17	HA62	90S2	6349
78.0	176	1.1	18.20	H032	90L4	4407
77.8	177	2.6	18.00	H052	90LA4	8000
77.7	171	1.3	36.17	HA52	80C2	4317
77.7	171	2.1	36.17	HA62	80C2	6372
76.9	179	1.1	18.20	H032	90LA4	4410
76.8	173	3.5	36.99	H062	90S2	12000
76.0	175	3.4	36.99	H062	80C2	12000
75.2	176	1.2	37.76	H042	90S2	6388
74.7	184	1.4	19.00	H042	90L4	6342
74.4	178	1.2	37.76	H042	80C2	6400
74.2	187	3.9	12.67	H062	100L6	12000
73.7	187	1.3	19.00	H042	90LA4	6357
73.4	189	3.9	12.67	H062	100LA6	12000
72.9	182	2.0	38.98	H052	90S2	8000
72.1	184	2.0	38.98	H052	80C2	8000
71.4	193	1.0	19.90	H032	90L4	4422
71.1	193	2.4	19.97	H052	90L4	8000
70.4	195	1.0	19.90	H032	90LA4	4423
70.4	188	3.4	40.33	H062	90S2	12000
70.1	196	2.3	19.97	H052	90LA4	8000
69.7	190	3.3	40.33	H062	80C2	12000
69.4	198	1.5	20.46	HA52	90L4	4482
69.4	198	2.3	20.46	HA62	90L4	6616

5.1 H/HA MOTORREDUCTORES (50Hz)

1.50 kW

n2 [rpm]	M2 [Nm]	fs	i	Reductor	Motor	Fr2 [N]
69.3	201	1.3	13.57	H042	100L6	6405
68.5	203	1.3	13.57	H042	100LA6	6415
68.4	201	1.4	20.46	HA52	90LA4	4504
68.4	201	2.3	20.46	HA62	90LA4	6647
67.6	203	1.2	21.00	H042	90L4	6445
66.7	206	1.2	21.00	H042	90LA4	6459
66.0	210	2.1	14.24	H052	100L6	8000
65.5	210	2.2	21.67	H052	90L4	8000
65.3	213	2.1	14.24	H052	100LA6	8000
64.8	214	1.4	14.50	HA52	100L6	4585
64.8	214	2.1	14.50	HA62	100L6	6768
64.6	213	2.2	21.67	H052	90LA4	8000
64.1	217	1.4	14.50	HA52	100LA6	4602
64.1	217	2.0	14.50	HA62	100LA6	6792
63.7	218	3.4	14.75	H062	100L6	12000
63.2	210	1.0	44.95	HA52	90S2	4625
63.2	210	1.6	44.95	HA62	90S2	6826
63.1	220	3.3	14.75	H062	100LA6	12000
62.6	220	0.9	22.68	H032	90L4	4425
62.6	212	1.7	45.36	H052	90S2	8000
62.5	212	1.0	44.95	HA52	80C2	4641
62.5	212	1.6	44.95	HA62	80C2	6850
61.9	214	1.7	45.36	H052	80C2	8000
61.7	215	3.0	46.06	H062	90S2	12000
61.4	224	1.2	23.15	H042	90L4	6538
61.0	225	3.8	23.27	H062	90L4	12000
61.0	218	2.9	46.06	H062	80C2	12000
60.5	227	1.1	23.15	H042	90LA4	6551
60.2	229	3.7	23.27	H062	90LA4	12000
58.9	236	1.1	15.96	H042	100L6	6555
58.3	238	1.1	15.96	H042	100LA6	6564
57.8	230	1.6	49.13	H052	90S2	8000
57.7	241	3.5	16.29	H062	100L6	12000
57.5	239	2.0	24.71	H052	90L4	8000
57.4	226	2.8	49.45	H063	90S2	12000
57.2	232	1.6	49.13	H052	80C2	8000
57.1	243	3.5	16.29	H062	100LA6	12000
57.1	233	1.2	49.78	HA62	90S2	7062
57.0	228	1.6	49.80	HA63	90S2	7063
56.7	243	1.9	24.71	H052	90LA4	8000
56.6	245	1.9	16.59	H052	100L6	8000
56.5	235	1.2	49.78	HA62	80C2	7087
56.4	230	1.6	49.80	HA63	80C2	7088
56.0	248	1.9	16.59	H052	100LA6	8000
55.8	246	1.1	25.43	HA52	90L4	4819

5.1 H/HA MOTORREDUCTORES (50Hz)

1.50 kW

n2 [rpm]	M2 [Nm]	fs	i	Reductor	Motor	Fr2 [N]
55.8	246	1.7	25.43	HA62	90L4	7113
55.6	250	1.3	16.91	HA52	100L6	4827
55.6	250	2.1	16.91	HA62	100L6	7124
55.3	249	3.4	25.70	H062	90L4	12000
55.1	250	1.1	25.43	HA52	90LA4	4842
55.1	250	1.7	25.43	HA62	90LA4	7147
55.0	253	1.2	16.91	HA52	100LA6	4844
55.0	253	2.1	16.91	HA62	100LA6	7150
54.5	252	1.0	26.04	H042	90L4	6600
54.5	252	3.4	25.70	H062	90LA4	12000
54.2	254	1.9	26.18	H052	90L4	8000
53.8	256	1.0	26.04	H042	90LA4	6600
53.5	257	1.9	26.18	H052	90LA4	8000
53.2	261	3.3	17.67	H062	100L6	12000
52.6	264	3.3	17.67	H062	100LA6	12000
52.2	266	1.8	18.00	H052	100L6	8000
52.0	250	2.6	54.61	H063	90S2	12000
51.7	269	1.8	18.00	H052	100LA6	8000
51.6	266	1.1	27.50	H042	90L4	6600
50.9	270	1.0	27.50	H042	90LA4	6600
50.6	262	1.4	56.11	H052	90S2	8000
50.1	265	1.4	56.11	H052	80C2	8000
49.9	275	1.8	28.44	H052	90L4	8000
49.5	281	0.9	19.00	H042	100L6	6600
49.2	279	1.8	28.44	H052	90LA4	8000
48.9	284	0.9	19.00	H042	100LA6	6600
48.4	284	2.8	29.33	H062	90L4	12000
48.3	269	1.4	58.81	H053	90S2	8000
47.8	272	1.4	58.81	H053	80C2	8000
47.7	288	2.8	29.33	H062	90LA4	12000
47.5	289	1.0	29.89	HA52	90L4	5086
47.5	289	1.6	29.89	HA62	90L4	7507
47.1	295	1.6	19.97	H052	100L6	8000
47.1	276	1.3	60.25	HA63	90S2	7526
46.8	294	1.0	29.89	HA52	90LA4	5110
46.8	294	1.5	29.89	HA62	90LA4	7543
46.6	295	0.9	30.45	H042	90L4	6600
46.6	298	1.6	19.97	H052	100LA6	8000
46.6	279	1.3	60.25	HA63	80C2	7553
46.3	300	3.0	20.28	H062	100L6	12000
46.0	299	0.9	30.45	H042	90LA4	6600
45.9	303	2.9	20.28	H062	100LA6	12000
45.9	302	1.0	20.46	HA52	100L6	5143
45.9	302	1.6	20.46	HA62	100L6	7591
45.9	289	1.1	61.87	HA62	90S2	7593

5.1 H/HA MOTORREDUCTORES (50Hz)

1.50 kW

n2 [rpm]	M2 [Nm]	fs	i	Reductor	Motor	Fr2 [N]
45.5	306	1.0	20.46	HA52	100LA6	5162
45.5	306	1.6	20.46	HA62	100LA6	7618
45.4	292	1.1	61.87	HA62	80C2	7620
45.1	305	1.6	31.52	H052	90L4	8000
44.4	310	1.6	31.52	H052	90LA4	8000
44.4	310	2.7	32.00	H062	90L4	12000
43.8	314	2.7	32.00	H062	90LA4	12000
43.4	320	1.5	21.67	H052	100L6	8000
43.0	320	1.5	33.00	H052	90L4	8000
42.9	324	1.5	21.67	H052	100LA6	8000
42.4	324	1.5	33.00	H052	90LA4	8000
41.8	311	2.0	68.00	H063	90S2	12000
40.4	344	2.6	23.27	H062	100L6	12000
40.0	348	2.6	23.27	H062	100LA6	12000
39.3	350	0.9	36.17	HA52	90L4	5420
39.3	350	1.3	36.17	HA62	90L4	7999
39.0	333	1.1	72.75	H053	90S2	8000
38.7	355	0.8	36.17	HA52	90LA4	5445
38.7	355	1.3	36.17	HA62	90LA4	8000
38.6	336	1.1	72.75	H053	80C2	8000
38.4	358	2.2	36.99	H062	90L4	12000
38.0	365	1.4	24.71	H052	100L6	8000
37.9	343	1.1	74.88	HA63	90S2	8000
37.8	363	2.2	36.99	H062	90LA4	12000
37.6	369	1.3	24.71	H052	100LA6	8000
37.5	346	1.0	74.88	HA63	80C2	8000
37.0	376	1.2	25.43	HA62	100L6	8000
36.6	380	2.4	25.70	H062	100L6	12000
36.6	380	1.2	25.43	HA62	100LA6	8000
36.4	378	1.3	38.98	H052	90L4	8000
36.2	384	2.3	25.70	H062	100LA6	12000
36.0	361	3.7	78.87	H083	90S2	18000
35.9	387	1.3	26.18	H052	100L6	8000
35.9	383	1.3	38.98	H052	90LA4	8000
35.6	365	3.7	78.87	H083	80C2	18000
35.5	391	1.3	26.18	H052	100LA6	8000
35.2	391	2.2	40.33	H062	90L4	12000
34.7	396	2.1	40.33	H062	90LA4	12000
33.2	414	3.9	42.75	H082	90L4	18000
33.2	391	3.4	85.56	H083	90S2	18000
33.1	420	1.2	28.44	H052	100L6	8000
33.1	393	1.6	85.82	H063	90S2	12000
32.8	396	3.4	85.56	H083	80C2	18000
32.7	425	1.2	28.44	H052	100LA6	8000
32.7	397	1.6	85.82	H063	80C2	12000

5.1 H/HA MOTORREDUCTORES (50Hz)

1.50 kW

n2 [rpm]	M2 [Nm]	fs	i	Reductor	Motor	Fr2 [N]
32.7	420	3.8	42.75	H082	90LA4	18000
32.0	433	1.9	29.33	H062	100L6	12000
31.7	438	1.9	29.33	H062	100LA6	12000
31.6	435	1.0	44.95	HA62	90L4	8000
31.3	439	1.1	45.36	H052	90L4	8000
31.1	442	1.0	44.95	HA62	90LA4	8000
30.9	446	1.1	45.36	H052	90LA4	8000
30.8	446	1.9	46.06	H062	90L4	12000
30.4	452	1.9	46.06	H062	90LA4	12000
30.2	460	3.6	31.15	H082	100L6	18000
30.0	434	1.5	94.76	H063	90S2	12000
29.9	465	3.6	31.15	H082	100LA6	18000
29.8	466	1.1	31.52	H052	100L6	8000
29.7	438	1.5	94.76	H063	80C2	12000
29.5	471	1.1	31.52	H052	100LA6	8000
29.5	466	3.4	48.13	H082	90L4	18000
29.4	473	1.9	32.00	H062	100L6	12000
29.1	478	1.9	32.00	H062	100LA6	12000
29.1	473	3.4	48.13	H082	90LA4	18000
29.0	449	3.0	98.09	H083	90S2	18000
28.9	476	1.0	49.13	H052	90L4	8000
28.7	469	1.8	49.45	H063	90L4	12000
28.6	454	3.0	98.09	H083	80C2	18000
28.5	483	1.0	49.13	H052	90LA4	8000
28.5	472	1.0	49.80	HA63	90L4	8000
28.3	476	1.8	49.45	H063	90LA4	12000
28.1	479	1.0	49.80	HA63	90LA4	8000
27.3	508	3.3	34.38	H082	100L6	18000
27.1	513	3.3	34.38	H082	100LA6	18000
26.0	518	1.6	54.61	H063	90L4	12000
25.6	525	1.6	54.61	H063	90LA4	12000
25.4	547	1.5	36.99	H062	100L6	12000
25.3	543	0.9	56.11	H052	90L4	8000
25.2	516	2.6	112.78	H083	90S2	18000
25.1	552	1.5	36.99	H062	100LA6	12000
25.1	536	3.0	56.53	H083	90L4	18000
24.9	522	2.6	112.78	H083	80C2	18000
24.8	544	2.9	56.53	H083	90LA4	18000
24.3	554	0.9	58.81	H053	90L4	8000
24.3	572	2.9	38.70	H082	100L6	18000
24.1	540	1.2	118.00	H063	90S2	12000
24.0	578	2.9	38.70	H082	100LA6	18000
23.8	546	1.2	118.00	H063	80C2	12000
23.6	571	0.8	60.25	HA63	90L4	8000
23.3	596	1.5	40.33	H062	100L6	12000

5.1 H/HA MOTORREDUCTORES (50Hz)

1.50 kW

n2 [rpm]	M2 [Nm]	fs	i	Reductor	Motor	Fr2 [N]
23.2	579	0.8	60.25	HA63	90LA4	8000
23.1	602	1.5	40.33	H062	100LA6	12000
22.8	569	2.4	124.44	H083	90S2	18000
22.6	575	2.3	124.44	H083	80C2	18000
22.0	632	2.7	42.75	H082	100L6	18000
21.8	638	2.6	42.75	H082	100LA6	18000
20.9	645	1.3	68.00	H063	90L4	12000
20.6	654	1.3	68.00	H063	90LA4	12000
20.4	681	1.3	46.06	H062	100L6	12000
20.2	688	1.3	46.06	H062	100LA6	12000
20.0	650	2.1	142.15	H083	90S2	18000
19.9	678	2.7	71.48	H083	90L4	18000
19.8	657	2.1	142.15	H083	80C2	18000
19.6	688	2.6	71.48	H083	90LA4	18000
19.5	711	2.4	48.13	H082	100L6	18000
19.3	719	2.3	48.13	H082	100LA6	18000
19.0	716	1.2	49.45	H063	100L6	12000
18.8	723	1.2	49.45	H063	100LA6	12000
18.4	708	1.9	154.76	H083	90S2	18000
18.2	716	1.9	154.76	H083	80C2	18000
18.0	748	2.4	78.87	H083	90L4	18000
17.8	759	2.4	78.87	H083	90LA4	18000
17.7	736	3.6	160.82	H103	90S2	22000
17.5	743	1.8	162.35	H083	90S2	18000
17.3	751	1.8	162.35	H083	80C2	18000
17.2	790	1.1	54.61	H063	100L6	12000
17.0	799	1.1	54.61	H063	100LA6	12000
16.6	818	2.1	56.53	H083	100L6	18000
16.6	811	2.2	85.56	H083	90L4	18000
16.5	814	1.0	85.82	H063	90L4	12000
16.5	827	2.0	56.53	H083	100LA6	18000
16.4	823	2.2	85.56	H083	90LA4	18000
16.3	825	1.0	85.82	H063	90LA4	12000
15.9	820	1.6	179.13	H083	90S2	18000
15.7	828	1.6	179.13	H083	80C2	18000
15.7	828	3.2	181.07	H103	90S2	22000
15.0	899	0.9	94.76	H063	90L4	12000
14.8	911	0.9	94.76	H063	90LA4	12000
14.6	893	1.5	195.07	H083	90S2	18000
14.6	889	3.0	194.21	H103	90S2	22000
14.5	930	1.9	98.09	H083	90L4	18000
14.4	902	1.5	195.07	H083	80C2	18000
14.3	943	1.9	98.09	H083	90LA4	18000
13.8	984	0.9	68.00	H063	100L6	12000
13.5	1008	3.6	69.69	H103	100L6	22000

5.1 H/HA MOTORREDUCTORES (50Hz)

1.50 kW

n2 [rpm]	M2 [Nm]	fs	i	Reductor	Motor	Fr2 [N]
13.3	1019	3.6	69.69	H103	100LA6	22000
13.2	1034	1.8	71.48	H083	100L6	18000
13.2	986	2.7	215.45	H103	90S2	22000
13.0	1045	1.8	71.48	H083	100LA6	18000
12.7	1019	1.3	222.78	H083	90S2	18000
12.6	1030	1.3	222.78	H083	80C2	18000
12.6	1069	1.7	112.78	H083	90L4	18000
12.4	1085	1.7	112.78	H083	90LA4	18000
11.9	1141	1.7	78.87	H083	100L6	18000
11.8	1153	1.6	78.87	H083	100LA6	18000
11.8	1155	3.2	79.82	H103	100L6	22000
11.7	1167	3.1	79.82	H103	100LA6	22000
11.7	1110	2.4	242.59	H103	90S2	22000
11.4	1180	1.5	124.44	H083	90L4	18000
11.3	1197	1.5	124.44	H083	90LA4	18000
11.2	1218	3.0	84.16	H103	100L6	22000
11.1	1231	3.0	84.16	H103	100LA6	22000
11.0	1238	1.5	85.56	H083	100L6	18000
10.9	1251	1.5	85.56	H083	100LA6	18000
10.3	1316	4.0	89.97	H123	100LA6	30000
10.1	1351	2.7	93.36	H103	100L6	22000
10.0	1348	1.3	142.15	H083	90L4	18000
10.0	1365	2.7	93.36	H103	100LA6	22000
9.9	1360	2.6	143.42	H103	90L4	22000
9.8	1367	1.3	142.15	H083	90LA4	18000
9.8	1379	2.5	143.42	H103	90LA4	22000
9.6	1419	1.3	98.09	H083	100L6	18000
9.5	1434	1.3	98.09	H083	100LA6	18000
9.4	1448	2.5	100.07	H103	100L6	22000
9.4	1451	3.6	100.29	H123	100L6	30000
9.3	1463	2.5	100.07	H103	100LA6	22000
9.3	1467	3.6	100.29	H123	100LA6	30000
9.2	1468	1.2	154.76	H083	90L4	18000
9.0	1489	1.2	154.76	H083	90LA4	18000
8.8	1525	2.3	160.82	H103	90L4	22000
8.7	1539	1.2	162.35	H083	90L4	18000
8.7	1547	2.3	160.82	H103	90LA4	22000
8.7	1568	3.3	108.34	H123	100L6	30000
8.6	1561	1.2	162.35	H083	90LA4	18000
8.6	1584	3.3	108.34	H123	100LA6	30000
8.3	1632	1.2	112.78	H083	100L6	18000
8.2	1649	1.1	112.78	H083	100LA6	18000
7.9	1699	1.1	179.13	H083	90L4	18000
7.9	1716	3.1	118.62	H123	100L6	30000
7.8	1723	1.0	179.13	H083	90LA4	18000

5.1 H/HA MOTORREDUCTORES (50Hz)

1.50 kW

n2 [rpm]	M2 [Nm]	fs	i	Reductor	Motor	Fr2 [N]
7.8	1748	2.1	120.84	H103	100L6	22000
7.8	1717	2.0	181.07	H103	90L4	22000
7.8	1735	3.0	118.62	H123	100LA6	30000
7.7	1767	2.1	120.84	H103	100LA6	22000
7.7	1742	2.0	181.07	H103	90LA4	22000
7.6	1800	1.0	124.44	H083	100L6	18000
7.5	1820	1.0	124.44	H083	100LA6	18000
7.3	1850	1.0	195.07	H083	90L4	18000
7.3	1842	1.9	194.21	H103	90L4	22000
7.3	1854	2.8	128.18	H123	100L6	30000
7.3	1874	2.8	128.18	H123	100LA6	30000
7.2	1876	1.0	195.07	H083	90LA4	18000
7.2	1868	1.9	194.21	H103	90LA4	22000
7.0	1940	1.9	134.06	H103	100L6	22000
6.9	1960	1.9	134.06	H103	100LA6	22000
6.6	2057	0.9	142.15	H083	100L6	18000
6.6	2075	1.8	143.42	H103	100L6	22000
6.6	2043	1.7	215.45	H103	90L4	22000
6.5	2079	0.9	142.15	H083	100LA6	18000
6.5	2097	1.8	143.42	H103	100LA6	22000
6.5	2072	1.7	215.45	H103	90LA4	22000
6.5	2095	2.5	144.79	H123	100L6	30000
6.4	2117	2.5	144.79	H123	100LA6	30000
6.1	2246	2.3	155.22	H123	100L6	30000
6.0	2270	2.3	155.22	H123	100LA6	30000
5.9	2300	1.6	242.59	H103	90L4	22000
5.8	2327	1.6	160.82	H103	100L6	22000
5.8	2352	1.6	160.82	H103	100LA6	22000
5.8	2333	1.5	242.59	H103	90LA4	22000
5.4	2500	2.1	172.80	H123	100L6	30000
5.4	2527	2.1	172.80	H123	100LA6	30000
5.2	2620	1.4	181.07	H103	100L6	22000
5.1	2648	1.4	181.07	H103	100LA6	22000
5.0	2737	1.9	189.19	H123	100L6	30000
4.9	2767	1.9	189.19	H123	100LA6	30000
4.8	2810	1.3	194.21	H103	100L6	22000
4.8	2840	1.3	194.21	H103	100LA6	22000
4.5	3001	1.7	207.43	H123	100L6	30000
4.5	3033	1.7	207.43	H123	100LA6	30000
4.4	3117	1.2	215.45	H103	100L6	22000
4.3	3151	1.2	215.45	H103	100LA6	22000
4.1	3341	1.6	230.92	H123	100L6	30000
4.0	3377	1.6	230.92	H123	100LA6	30000
3.9	3510	1.1	242.59	H103	100L6	22000
3.8	3548	1.1	242.59	H103	100LA6	22000

5.1 H/HA MOTORREDUCTORES (50Hz)

1.50 kW

n2 [rpm]	M2 [Nm]	fs	i	Reductor	Motor	Fr2 [N]
3.6	3756	1.4	259.64	H123	100L6	30000
3.6	3797	1.4	259.64	H123	100LA6	30000

1.85 kW

n2 [rpm]	M2 [Nm]	fs	i	Reductor	Motor	Fr2 [N]
1100.0	16	2.6	1.27	H051	90LB4	1598
986.4	17	3.5	1.42	H051	90LB4	1651
973.9	18	1.4	1.44	H041	90LB4	631
966.7	18	2.3	1.45	HA51	90LB4	1410
730.7	24	1.8	1.27	H051	100LB6	1803
700.0	24	1.0	2.00	H041	90LB4	681
697.5	25	3.8	1.33	HA61	100LB6	2353
692.1	25	3.4	1.34	H061	100LB6	2915
658.8	26	2.3	2.13	H051	90LB4	1860
655.2	26	2.4	1.42	H051	100LB6	1861
560.0	31	2.9	2.50	HA61	90LB4	2531
550.0	31	1.0	2.55	H041	90LB4	716
544.4	31	2.2	2.57	H051	90LB4	1964
544.4	31	3.8	2.57	H061	90LB4	3130
515.8	33	0.9	2.71	H041	90LB4	724
475.5	36	1.1	2.94	HA51	90LB4	1786
450.8	38	1.1	3.11	H041	90LB4	742
442.1	39	2.1	3.17	H051	90LB4	2082
442.1	39	3.4	3.17	H061	90LB4	3324
437.6	40	1.6	2.13	H051	100LB6	2086
437.6	40	3.2	2.13	H061	100LB6	3331
390.2	44	1.0	3.59	H041	90LB4	759
379.7	45	2.0	3.69	H051	90LB4	2170
379.7	45	3.3	3.69	H061	90LB4	3470
372.0	47	2.0	2.50	HA61	100LB6	2901
361.7	48	1.5	2.57	H051	100LB6	2196
361.7	48	2.6	2.57	H061	100LB6	3515
350.0	49	1.8	4.00	H051	90LB4	2218
350.0	49	3.1	4.00	H061	90LB4	3550
319.3	54	2.0	4.38	HA61	90LB4	3053
298.1	57	1.7	4.70	H032	90LB4	3417
294.7	58	0.9	4.75	HA51	90LB4	2095
293.7	59	1.4	3.17	H051	100LB6	2319
293.7	59	2.3	3.17	H061	100LB6	3700
293.5	58	1.6	4.77	H051	90LB4	2322
293.5	58	2.7	4.77	H061	90LB4	3700
272.2	62	3.9	5.14	HA52	90LB4	2842
266.7	64	1.6	5.25	H051	90LB4	2380

5.1 H/HA MOTORREDUCTORES (50Hz)

1.85 kW

n2 [rpm]	M2 [Nm]	fs	i	Reductor	Motor	Fr2 [N]
266.7	64	2.6	5.25	H061	90LB4	3700
260.3	65	2.1	5.38	HA42	90LB4	2308
256.3	66	2.4	5.46	H042	90LB4	4690
252.2	69	1.4	3.69	H051	100LB6	2410
252.2	69	2.3	3.69	H061	100LB6	3700
244.4	69	3.7	5.73	H052	90LB4	6117
240.6	71	1.4	5.82	H051	90LB4	2441
240.6	71	2.4	5.82	H061	90LB4	3700
232.5	74	1.3	4.00	H051	100LB6	2458
232.5	74	2.1	4.00	H061	100LB6	3700
225.0	75	3.2	6.22	HA52	90LB4	3029
224.7	75	1.4	6.23	H032	90LB4	3616
214.8	79	1.8	6.52	HA42	90LB4	2461
212.1	82	1.4	4.38	HA61	100LB6	3499
203.1	84	3.5	6.89	H052	90LB4	6438
199.3	87	3.9	4.67	H081	100LB6	4000
198.0	86	1.2	4.70	H032	100LB6	3689
195.0	89	1.1	4.77	H051	100LB6	2500
195.0	89	1.9	4.77	H061	100LB6	3700
194.8	87	1.8	7.19	H042	90LB4	5013
190.9	90	1.1	7.33	H051	90LB4	2500
190.9	90	1.9	7.33	H061	90LB4	3700
186.7	92	3.8	7.50	H081	90LB4	4000
181.0	94	2.6	7.73	HA52	90LB4	3256
180.8	95	2.7	5.14	HA52	100LB6	3257
180.6	95	0.9	7.75	HA61	90LB4	3691
180.4	94	1.3	7.76	H032	90LB4	3754
177.1	98	1.1	5.25	H051	100LB6	2500
177.1	98	1.8	5.25	H061	100LB6	3700
172.6	98	1.3	8.11	HA42	90LB4	2647
170.3	101	1.7	5.46	H042	100LB6	5162
167.9	103	3.4	5.54	H081	100LB6	4000
167.2	103	1.0	8.38	H051	90LB4	2500
167.2	103	1.7	8.38	H061	90LB4	3700
165.8	103	3.4	8.44	H081	90LB4	4000
164.2	103	3.3	8.53	H052	90LB4	6815
162.4	105	2.6	5.73	H052	100LB6	6827
159.8	108	1.0	5.82	H051	100LB6	2500
159.8	108	1.6	5.82	H061	100LB6	3700
157.9	107	1.2	8.87	H032	90LB4	3827
157.1	108	1.9	8.91	H042	90LB4	5262
152.9	113	3.2	6.08	H081	100LB6	4000
149.5	115	2.2	6.22	HA52	100LB6	3471
149.5	115	3.5	6.22	HA62	100LB6	5123
149.3	115	1.0	6.23	H032	100LB6	3843

5.1 H/HA MOTORREDUCTORES (50Hz)

1.85 kW

n2 [rpm]	M2 [Nm]	fs	i	Reductor	Motor	Fr2 [N]
146.4	116	3.2	9.56	H052	90LB4	7020
145.2	117	2.6	9.64	HA52	90LB4	3505
145.2	117	3.9	9.64	HA62	90LB4	5173
138.0	123	1.1	10.14	H032	90LB4	3891
135.7	125	1.9	10.31	H042	90LB4	5425
134.9	127	2.4	6.89	H052	100LB6	7159
129.4	132	1.3	7.19	H042	100LB6	5466
128.0	132	1.1	10.94	HA42	90LB4	2924
126.8	136	1.3	7.33	H061	100LB6	3700
124.0	140	2.6	7.50	H081	100LB6	4000
121.6	139	2.8	11.51	H052	90LB4	7354
120.3	142	1.8	7.73	HA52	100LB6	3732
120.3	142	2.8	7.73	HA62	100LB6	5508
120.0	141	2.0	11.67	HA52	90LB4	3735
120.0	141	3.1	11.67	HA62	90LB4	5512
119.8	143	0.9	7.76	H032	100LB6	3929
119.0	142	1.0	11.76	H032	90LB4	3946
118.6	143	1.7	11.80	H042	90LB4	5569
111.0	156	1.1	8.38	H061	100LB6	3700
110.1	157	2.3	8.44	H081	100LB6	4000
109.1	157	2.3	8.53	H052	100LB6	7540
105.7	161	0.9	13.25	HA42	90LB4	3117
104.3	164	1.3	8.91	H042	100LB6	5686
103.2	164	1.5	13.57	H042	90LB4	5710
102.0	166	1.0	13.72	H032	90LB4	3982
99.1	173	3.6	9.39	H062	100LB6	12000
98.3	172	2.5	14.24	H052	90LB4	7736
97.3	176	2.2	9.56	H052	100LB6	7744
96.6	176	1.6	14.50	HA52	90LB4	4015
96.6	176	2.4	14.50	HA62	90LB4	5926
96.4	178	1.8	9.64	HA52	100LB6	4017
96.4	178	2.7	9.64	HA62	100LB6	5929
95.5	178	1.0	14.66	H032	90LB4	3990
94.9	179	3.9	14.75	H062	90LB4	12000
90.2	190	1.3	10.31	H042	100LB6	5820
87.7	193	1.3	15.96	H042	90LB4	5859
84.4	201	2.2	16.59	H052	90LB4	8000
83.5	203	0.9	16.77	H032	90LB4	3989
82.8	205	1.5	16.91	HA52	90LB4	4227
82.8	205	2.4	16.91	HA62	90LB4	6238
80.8	212	1.9	11.51	H052	100LB6	8000
79.7	215	1.4	11.67	HA52	100LB6	4280
79.7	215	2.1	11.67	HA62	100LB6	6317
79.6	215	3.2	11.69	H062	100LB6	12000
79.2	214	3.9	17.67	H062	90LB4	12000

5.1 H/HA MOTORREDUCTORES (50Hz)

1.85 kW

n2 [rpm]	M2 [Nm]	fs	i	Reductor	Motor	Fr2 [N]
78.8	217	1.2	11.80	H042	100LB6	5928
77.8	218	2.1	18.00	H052	90LB4	8000
76.9	220	0.9	18.20	H032	90LB4	3976
73.7	230	1.1	19.00	H042	90LB4	5996
73.4	233	3.2	12.67	H062	100LB6	12000
70.1	242	1.9	19.97	H052	90LB4	8000
69.0	246	3.5	20.28	H062	90LB4	12000
68.5	250	1.1	13.57	H042	100LB6	6023
68.4	248	1.2	20.46	HA52	90LB4	4504
68.4	248	1.9	20.46	HA62	90LB4	6647
66.7	254	1.0	21.00	H042	90LB4	6060
65.3	262	1.7	14.24	H052	100LB6	8000
64.6	262	1.8	21.67	H052	90LB4	8000
64.1	267	1.1	14.50	HA52	100LB6	4602
64.1	267	1.7	14.50	HA62	100LB6	6792
63.1	272	2.7	14.75	H062	100LB6	12000
60.5	280	0.9	23.15	H042	90LB4	6111
60.2	282	3.0	23.27	H062	90LB4	12000
57.1	300	2.8	16.29	H062	100LB6	12000
56.7	299	1.6	24.71	H052	90LB4	8000
56.0	306	1.5	16.59	H052	100LB6	8000
55.1	308	0.9	25.43	HA52	90LB4	4842
55.1	308	1.4	25.43	HA62	90LB4	7147
55.0	312	1.0	16.91	HA52	100LB6	4844
55.0	312	1.7	16.91	HA62	100LB6	7150
54.5	311	2.7	25.70	H062	90LB4	12000
53.5	317	1.5	26.18	H052	90LB4	8000
52.6	325	2.7	17.67	H062	100LB6	12000
51.7	332	1.5	18.00	H052	100LB6	8000
49.2	345	1.4	28.44	H052	90LB4	8000
47.7	355	2.3	29.33	H062	90LB4	12000
46.8	362	0.8	29.89	HA52	90LB4	5110
46.8	362	1.2	29.89	HA62	90LB4	7543
46.6	368	1.3	19.97	H052	100LB6	8000
45.9	374	2.4	20.28	H062	100LB6	12000
45.5	377	0.8	20.46	HA52	100LB6	5162
45.5	377	1.3	20.46	HA62	100LB6	7618
44.4	382	1.3	31.52	H052	90LB4	8000
43.8	388	2.2	32.00	H062	90LB4	12000
42.9	399	1.2	21.67	H052	100LB6	8000
42.4	400	1.2	33.00	H052	90LB4	8000
40.7	416	3.8	34.38	H082	90LB4	18000
40.0	429	2.1	23.27	H062	100LB6	12000
38.7	438	1.1	36.17	HA62	90LB4	8000
37.8	448	1.8	36.99	H062	90LB4	12000

5.1 H/HA MOTORREDUCTORES (50Hz)

1.85 kW

n2 [rpm]	M2 [Nm]	fs	i	Reductor	Motor	Fr2 [N]
37.6	455	1.1	24.71	H052	100LB6	8000
36.6	468	1.0	25.43	HA62	100LB6	8000
36.2	473	1.9	25.70	H062	100LB6	12000
36.2	469	3.4	38.70	H082	90LB4	18000
35.9	472	1.0	38.98	H052	90LB4	8000
35.5	482	1.1	26.18	H052	100LB6	8000
35.0	490	3.4	26.60	H082	100LB6	18000
34.7	489	1.7	40.33	H062	90LB4	12000
33.4	514	3.3	27.88	H082	100LB6	18000
32.7	524	1.0	28.44	H052	100LB6	8000
32.7	518	3.1	42.75	H082	90LB4	18000
31.7	540	1.6	29.33	H062	100LB6	12000
31.1	545	0.8	44.95	HA62	90LB4	8000
30.4	558	1.5	46.06	H062	90LB4	12000
29.9	574	2.9	31.15	H082	100LB6	18000
29.1	589	1.5	32.00	H062	100LB6	12000
29.1	583	2.7	48.13	H082	90LB4	18000
28.3	587	1.4	49.45	H063	90LB4	12000
28.1	591	0.8	49.80	HA63	90LB4	8000
27.1	633	2.7	34.38	H082	100LB6	18000
25.6	648	1.3	54.61	H063	90LB4	12000
25.1	681	1.2	36.99	H062	100LB6	12000
24.8	671	2.4	56.53	H083	90LB4	18000
24.0	713	2.4	38.70	H082	100LB6	18000
23.1	743	1.2	40.33	H062	100LB6	12000
21.8	787	2.1	42.75	H082	100LB6	18000
20.6	807	1.1	68.00	H063	90LB4	12000
20.2	848	1.1	46.06	H062	100LB6	12000
19.6	848	2.1	71.48	H083	90LB4	18000
19.3	887	1.9	48.13	H082	100LB6	18000
18.8	892	1.0	49.45	H063	100LB6	12000
18.1	949	3.7	51.52	H102	100LB6	22000
17.8	936	1.9	78.87	H083	90LB4	18000
17.0	985	0.9	54.61	H063	100LB6	12000
16.5	1019	1.6	56.53	H083	100LB6	18000
16.4	1015	1.8	85.56	H083	90LB4	18000
14.3	1164	1.5	98.09	H083	90LB4	18000
13.3	1257	2.9	69.69	H103	100LB6	22000
13.0	1289	1.5	71.48	H083	100LB6	18000
12.6	1329	3.9	73.71	H123	100LB6	30000
12.4	1338	1.3	112.78	H083	90LB4	18000
11.8	1423	1.3	78.87	H083	100LB6	18000
11.7	1440	2.6	79.82	H103	100LB6	22000
11.3	1476	1.2	124.44	H083	90LB4	18000
11.2	1503	3.5	83.34	H123	100LB6	30000

5.1 H/HA MOTORREDUCTORES (50Hz)

1.85 kW

n2 [rpm]	M2 [Nm]	fs	i	Reductor	Motor	Fr2 [N]
11.1	1518	2.4	84.16	H103	100LB6	22000
10.9	1543	1.2	85.56	H083	100LB6	18000
10.3	1623	3.2	89.97	H123	100LB6	30000
10.0	1684	2.2	93.36	H103	100LB6	22000
9.8	1686	1.1	142.15	H083	90LB4	18000
9.8	1701	2.1	143.42	H103	90LB4	22000
9.5	1769	1.1	98.09	H083	100LB6	18000
9.3	1805	2.0	100.07	H103	100LB6	22000
9.3	1809	2.9	100.29	H123	100LB6	30000
9.0	1836	1.0	154.76	H083	90LB4	18000
8.7	1908	1.8	160.82	H103	90LB4	22000
8.6	1926	0.9	162.35	H083	90LB4	18000
8.6	1954	2.7	108.34	H123	100LB6	30000
8.2	2034	0.9	112.78	H083	100LB6	18000
7.8	2139	2.5	118.62	H123	100LB6	30000
7.7	2179	1.7	120.84	H103	100LB6	22000
7.7	2148	1.6	181.07	H103	90LB4	22000
7.3	2312	2.3	128.18	H123	100LB6	30000
7.2	2304	1.5	194.21	H103	90LB4	22000
6.9	2418	1.5	134.06	H103	100LB6	22000
6.5	2587	1.4	143.42	H103	100LB6	22000
6.5	2556	1.4	215.45	H103	90LB4	22000
6.4	2611	2.0	144.79	H123	100LB6	30000
6.0	2800	1.9	155.22	H123	100LB6	30000
5.8	2901	1.3	160.82	H103	100LB6	22000
5.8	2878	1.3	242.59	H103	90LB4	22000
5.4	3117	1.7	172.80	H123	100LB6	30000
5.1	3266	1.1	181.07	H103	100LB6	22000
4.9	3412	1.5	189.19	H123	100LB6	30000
4.8	3503	1.0	194.21	H103	100LB6	22000
4.5	3741	1.4	207.43	H123	100LB6	30000
4.3	3886	0.9	215.45	H103	100LB6	22000
4.0	4165	1.3	230.92	H123	100LB6	30000
3.6	4683	1.1	259.64	H123	100LB6	30000

2.20 kW

n2 [rpm]	M2 [Nm]	fs	i	Reductor	Motor	Fr2 [N]
2262.9	9	3.5	1.27	H051	90L2	1275
2003.5	10	1.9	1.44	H041	90L2	516
1988.6	10	3.0	1.45	HA51	90L2	1109
1440.0	14	1.4	2.00	H041	90L2	563
1355.3	15	3.1	2.13	H051	90L2	1492
1152.0	17	4.0	2.50	HA61	90L2	1990

5.1 H/HA MOTORREDUCTORES (50Hz)

2.20 kW

n2 [rpm]	M2 [Nm]	fs	i	Reductor	Motor	Fr2 [N]
1147.1	18	2.3	1.27	H051	112MR4	1565
1123.6	18	1.3	2.55	H041	90L2	598
1123.6	18	2.2	1.27	H051	100LA4	1575
1120.0	18	3.0	2.57	H051	90L2	1579
1061.1	19	1.2	2.71	H041	90L2	606
1028.6	20	3.0	1.42	H051	112MR4	1617
1007.5	20	3.0	1.42	H051	100LA4	1627
978.1	20	1.5	2.94	HA51	90L2	1404
927.5	21	1.4	3.11	H041	90L2	626
909.5	22	2.8	3.17	H051	90L2	1680
802.6	25	1.4	3.59	H041	90L2	646
781.0	25	2.7	3.69	H051	90L2	1755
754.3	27	1.5	1.27	H051	112M6	1768
730.7	28	1.5	1.27	H051	112MA6	1784
720.0	29	3.3	1.33	HA61	112M6	2328
715.0	28	2.5	4.00	H051	90L2	1801
714.4	29	2.9	1.34	H061	112M6	2861
697.5	30	3.2	1.33	HA61	112MA6	2353
692.1	30	2.8	1.34	H061	112MA6	2888
687.1	30	2.0	2.13	H051	112MR4	1817
685.7	29	1.2	4.20	H041	90L2	667
676.4	30	2.1	1.42	H051	112M6	1823
672.9	30	2.0	2.13	H051	100LA4	1827
672.9	30	4.0	2.13	H061	100LA4	2913
656.8	30	2.8	4.38	HA61	90L2	2400
655.2	31	2.0	1.42	H051	112MA6	1840
613.3	32	2.2	4.70	H032	90L2	2830
603.9	33	2.2	4.77	H051	90L2	1889
603.9	33	3.7	4.77	H061	90L2	3013
602.1	33	1.1	4.75	HA51	90L2	1651
584.0	35	2.6	2.50	HA61	112MR4	2496
572.0	36	2.5	2.50	HA61	100LA4	2514
567.8	36	2.0	2.57	H051	112MR4	1916
567.8	36	3.3	2.57	H061	112MR4	3059
556.1	37	1.9	2.57	H051	100LA4	1927
556.1	37	3.3	2.57	H061	100LA4	3078
548.6	36	2.1	5.25	H051	90L2	1940
548.6	36	3.6	5.25	H061	90L2	3097
531.7	37	2.9	5.38	HA42	90L2	1819
528.0	37	1.0	5.45	HA51	90L2	1725
527.2	37	3.3	5.46	H042	90L2	3823
495.0	40	1.9	5.82	H051	90L2	1995
495.0	40	3.2	5.82	H061	90L2	3189
462.3	42	1.9	6.23	H032	90L2	3031
461.1	44	1.8	3.17	H051	112MR4	2027

5.1 H/HA MOTORREDUCTORES (50Hz)

2.20 kW

n2 [rpm]	M2 [Nm]	fs	i	Reductor	Motor	Fr2 [N]
461.1	44	2.9	3.17	H061	112MR4	3244
451.8	46	1.4	2.13	H051	112M6	2036
451.8	46	2.8	2.13	H061	112M6	3260
451.6	45	1.8	3.17	H051	100LA4	2038
451.6	45	2.9	3.17	H061	100LA4	3263
441.9	44	2.4	6.52	HA42	90L2	1935
437.6	47	1.3	2.13	H051	112MA6	2053
437.6	47	2.7	2.13	H061	112MA6	3289
400.7	49	2.5	7.19	H042	90L2	4118
395.9	51	1.7	3.69	H051	112MR4	2110
395.9	51	2.9	3.69	H061	112MR4	3383
392.7	50	1.5	7.33	H051	90L2	2122
392.7	50	2.5	7.33	H061	90L2	3401
387.8	53	1.7	3.69	H051	100LA4	2121
387.8	53	2.9	3.69	H061	100LA4	3402
384.0	54	1.8	2.50	HA61	112M6	2871
373.3	55	1.3	2.57	H051	112M6	2140
373.3	55	2.3	2.57	H061	112M6	3434
372.0	55	1.7	2.50	HA61	112MA6	2901
371.6	53	1.3	7.75	HA61	90L2	2902
369.8	53	3.4	7.73	HA52	90L2	2566
368.4	53	1.8	7.76	H032	90L2	3189
365.0	56	1.6	4.00	H051	112MR4	2155
365.0	56	2.7	4.00	H061	112MR4	3458
361.7	57	1.3	2.57	H051	112MA6	2157
361.7	57	2.2	2.57	H061	112MA6	3464
357.5	57	1.6	4.00	H051	100LA4	2166
357.5	57	2.6	4.00	H061	100LA4	3478
355.1	55	1.8	8.11	HA42	90L2	2081
341.5	58	1.3	8.38	H051	90L2	2200
341.5	58	2.2	8.38	H061	90L2	3532
333.0	61	1.8	4.38	HA61	112MR4	3010
324.8	60	1.6	8.87	H032	90L2	3274
323.9	63	1.7	4.38	HA61	100LA4	3038
320.9	61	2.6	8.91	H042	90L2	4361
310.9	65	1.5	4.70	H032	112MR4	3279
306.1	67	1.4	4.77	H051	112MR4	2251
306.1	67	2.4	4.77	H061	112MR4	3623
303.2	68	1.2	3.17	H051	112M6	2254
303.2	68	2.0	3.17	H061	112M6	3629
302.4	67	1.4	4.70	H032	100LA4	3297
299.8	68	1.4	4.77	H051	100LA4	2263
299.8	68	2.4	4.77	H061	100LA4	3643
296.6	66	3.4	9.64	HA52	90L2	2762
293.7	70	1.2	3.17	H051	112MA6	2271

5.1 H/HA MOTORREDUCTORES (50Hz)

2.20 kW

n2 [rpm]	M2 [Nm]	fs	i	Reductor	Motor	Fr2 [N]
293.7	70	1.9	3.17	H061	112MA6	3658
283.9	69	1.5	10.14	H032	90L2	3361
283.9	71	3.4	5.14	HA52	112MR4	2803
279.2	70	2.6	10.31	H042	90L2	4515
278.1	73	1.4	5.25	H051	112MR4	2304
278.1	73	2.3	5.25	H061	112MR4	3700
278.1	73	3.3	5.14	HA52	100LA4	2822
272.4	75	1.3	5.25	H051	100LA4	2315
272.4	75	2.3	5.25	H061	100LA4	3700
267.3	75	2.1	5.46	H042	112MR4	4541
263.3	74	1.5	10.94	HA42	90L2	2299
260.3	79	1.2	3.69	H051	112M6	2337
260.3	79	2.0	3.69	H061	112M6	3700
260.0	78	2.1	5.46	H042	100LA4	4571
254.9	79	3.3	5.73	H052	112MR4	5962
252.2	82	1.2	3.69	H051	112MA6	2354
252.2	82	1.9	3.69	H061	112MA6	3700
250.9	81	1.2	5.82	H051	112MR4	2360
250.9	81	2.1	5.82	H061	112MR4	3700
250.2	78	3.8	11.51	H052	90L2	6011
249.9	82	4.0	3.72	H081	112MA6	4000
249.7	81	3.2	5.73	H052	100LA4	5995
246.9	79	2.7	11.67	HA52	90L2	2936
244.1	80	2.4	11.80	H042	90L2	4663
244.1	84	1.2	5.82	H051	100LA4	2375
244.1	84	2.0	5.82	H061	100LA4	3700
243.2	80	1.4	11.76	H032	90L2	3455
240.0	86	1.8	4.00	H061	112M6	3700
240.0	86	3.9	4.00	H081	112M6	4000
235.1	87	3.9	6.08	H081	100LA4	4000
234.6	86	2.8	6.22	HA52	112MR4	2986
234.4	86	1.2	6.23	H032	112MR4	3445
232.5	89	1.8	4.00	H061	112MA6	3700
232.5	89	3.8	4.00	H081	112MA6	4000
229.8	88	2.7	6.22	HA52	100LA4	3007
229.6	88	1.2	6.23	H032	100LA4	3456
218.9	94	1.2	4.38	HA61	112M6	3462
217.4	90	1.2	13.25	HA42	90L2	2451
212.2	92	2.0	13.57	H042	90L2	4815
212.1	97	1.2	4.38	HA61	112MA6	3499
211.8	95	3.0	6.89	H052	112MR4	6264
209.9	93	1.4	13.72	H032	90L2	3537
206.0	98	3.0	6.89	H052	100LA4	6309
205.7	100	3.4	4.67	H081	112M6	4000
203.1	99	1.6	7.19	H042	112MR4	4833

5.1 H/HA MOTORREDUCTORES (50Hz)

2.20 kW

n2 [rpm]	M2 [Nm]	fs	i	Reductor	Motor	Fr2 [N]
201.3	102	1.6	4.77	H061	112M6	3700
200.9	97	3.3	14.24	H052	90L2	6374
199.3	103	3.3	4.67	H081	112MA6	4000
199.1	102	1.7	7.33	H061	112MR4	3700
197.6	102	1.6	7.19	H042	100LA4	4862
197.2	99	2.1	14.50	HA52	90L2	3164
197.2	99	3.2	14.50	HA62	90L2	4671
195.1	100	1.3	14.66	H032	90L2	3574
195.0	106	1.6	4.77	H061	112MA6	3700
195.0	105	1.6	7.33	H061	100LA4	3700
194.7	105	3.3	7.50	H081	112MR4	4000
189.3	108	3.3	7.50	H081	100LA4	4000
188.8	107	2.2	7.73	HA52	112MR4	3211
188.8	107	3.6	7.73	HA62	112MR4	4739
188.1	107	1.2	7.76	H032	112MR4	3552
186.7	109	2.3	5.14	HA52	112M6	3223
186.7	109	3.7	5.14	HA62	112M6	4757
183.6	110	2.2	7.73	HA52	100LA4	3241
183.6	110	3.5	7.73	HA62	100LA4	4783
182.9	110	1.1	7.76	H032	100LA4	3563
182.9	113	0.9	5.25	H051	112M6	2500
182.9	113	1.6	5.25	H061	112M6	3700
180.8	113	2.2	5.14	HA52	112MA6	3257
180.8	113	3.5	5.14	HA62	112MA6	4808
179.2	109	1.7	15.96	H042	90L2	4995
177.1	116	0.9	5.25	H051	112MA6	2500
177.1	116	1.5	5.25	H061	112MA6	3700
175.7	116	1.4	5.46	H042	112M6	4972
174.3	117	1.5	8.38	H061	112MR4	3700
173.3	119	2.9	5.54	H081	112M6	4000
172.9	118	3.0	8.44	H081	112MR4	4000
172.4	113	3.0	16.59	H052	90L2	6631
171.2	118	2.9	8.53	H052	112MR4	6614
170.6	114	1.2	16.77	H032	90L2	3633
170.3	120	1.4	5.46	H042	112MA6	5004
169.6	120	1.4	8.38	H061	100LA4	3700
169.1	115	2.0	16.91	HA52	90L2	3331
169.1	115	3.3	16.91	HA62	90L2	4917
168.2	121	2.9	8.44	H081	100LA4	4000
167.9	123	2.8	5.54	H081	112MA6	4000
167.6	122	2.2	5.73	H052	112M6	6642
166.5	121	2.8	8.53	H052	100LA4	6660
165.0	125	1.4	5.82	H061	112M6	3700
164.7	122	1.1	8.87	H032	112MR4	3603
163.8	123	1.7	8.91	H042	112MR4	5052

5.1 H/HA MOTORREDUCTORES (50Hz)

2.20 kW

n2 [rpm]	M2 [Nm]	fs	i	Reductor	Motor	Fr2 [N]
162.4	125	2.2	5.73	H052	112MA6	6694
160.2	126	1.0	8.87	H032	100LA4	3612
160.0	122	2.8	18.00	H052	90L2	6756
159.8	129	1.4	5.82	H061	112MA6	3700
159.3	127	1.7	8.91	H042	100LA4	5079
157.8	130	2.7	6.08	H081	112M6	4000
157.1	124	1.2	18.20	H032	90L2	3664
154.3	132	1.9	6.22	HA52	112M6	3434
154.3	132	3.0	6.22	HA62	112M6	5069
152.9	135	2.7	6.08	H081	112MA6	4000
152.7	132	2.8	9.56	H052	112MR4	6804
151.4	133	2.3	9.64	HA52	112MR4	3456
151.4	133	3.5	9.64	HA62	112MR4	5101
150.5	129	1.5	19.00	H042	90L2	5172
149.5	136	1.8	6.22	HA52	112MA6	3471
149.5	136	2.9	6.22	HA62	112MA6	5123
148.5	136	2.7	9.56	H052	100LA4	6850
147.3	137	2.2	9.64	HA52	100LA4	3488
147.3	137	3.4	9.64	HA62	100LA4	5149
143.9	140	1.0	10.14	H032	112MR4	3641
143.7	135	1.1	19.90	H032	90L2	3692
143.2	136	2.5	19.97	H052	90L2	6943
141.6	142	1.7	10.31	H042	112MR4	5191
140.0	144	1.0	10.14	H032	100LA4	3647
139.8	139	1.6	20.46	HA52	90L2	3549
139.8	139	2.5	20.46	HA62	90L2	5239
139.3	146	2.1	6.89	H052	112M6	6946
137.7	147	1.6	10.31	H042	100LA4	5216
136.2	143	1.3	21.00	H042	90L2	5269
134.9	151	2.0	6.89	H052	112MA6	6998
132.0	147	2.4	21.67	H052	90L2	7080
129.9	157	3.7	7.39	H062	112M6	12000
128.0	161	2.3	7.50	H081	112M6	4000
126.8	159	2.5	11.51	H052	112MR4	7109
125.8	162	3.6	7.39	H062	112MA6	12000
125.1	161	1.7	11.67	HA52	112MR4	3683
125.1	161	2.7	11.67	HA62	112MR4	5436
124.1	164	1.5	7.73	HA52	112M6	3693
124.1	164	2.4	7.73	HA62	112M6	5450
124.0	166	2.2	7.50	H081	112MA6	4000
123.7	163	1.5	11.80	H042	112MR4	5310
123.6	158	1.2	23.15	H042	90L2	5359
123.4	163	2.4	11.51	H052	100LA4	7155
121.7	166	1.7	11.67	HA52	100LA4	3717
121.7	166	2.7	11.67	HA62	100LA4	5486

5.1 H/HA MOTORREDUCTORES (50Hz)

2.20 kW

n2 [rpm]	M2 [Nm]	fs	i	Reductor	Motor	Fr2 [N]
121.5	166	3.9	11.69	H062	100LA4	12000
120.3	168	1.5	11.80	H042	100LA4	5333
120.3	169	1.5	7.73	HA52	112MA6	3732
120.3	169	2.4	7.73	HA62	112MA6	5508
115.8	168	2.1	24.71	H052	90L2	7299
114.3	180	3.8	8.40	H101	112M6	5000
113.7	181	2.0	8.44	H081	112M6	4000
112.9	180	3.5	8.50	H062	112M6	12000
112.6	181	2.0	8.53	H052	112M6	7291
112.5	173	1.2	25.43	HA52	90L2	3816
112.5	173	1.9	25.43	HA62	90L2	5633
112.1	180	3.9	12.67	H062	100LA4	12000
111.3	175	3.6	25.70	H062	90L2	12000
110.7	186	3.7	8.40	H101	112MA6	5000
110.1	187	2.0	8.44	H081	112MA6	4000
109.8	177	1.1	26.04	H042	90L2	5459
109.4	186	3.4	8.50	H062	112MA6	12000
109.2	178	2.1	26.18	H052	90L2	7394
109.1	187	1.9	8.53	H052	112MA6	7341
107.6	187	1.3	13.57	H042	112MR4	5422
104.6	193	1.3	13.57	H042	100LA4	5442
104.0	187	1.1	27.50	H042	90L2	5503
102.5	197	2.2	14.24	H052	112MR4	7452
102.3	199	3.2	9.39	H062	112M6	12000
100.7	200	1.4	14.50	HA52	112MR4	3959
100.7	200	2.1	14.50	HA62	112MR4	5844
100.6	194	1.9	28.44	H052	90L2	7529
100.4	203	1.9	9.56	H052	112M6	7472
99.7	202	2.1	14.24	H052	100LA4	7495
99.6	205	1.5	9.64	HA52	112M6	3974
99.6	205	2.4	9.64	HA62	112M6	5866
99.1	206	3.1	9.39	H062	112MA6	12000
99.0	204	3.4	14.75	H062	112MR4	12000
97.9	206	1.4	14.50	HA52	100LA4	3996
97.9	206	2.0	14.50	HA62	100LA4	5898
97.5	200	3.0	29.33	H062	90L2	12000
97.3	209	1.9	9.56	H052	112MA6	7521
96.4	211	1.5	9.64	HA52	112MA6	4017
96.4	211	2.3	9.64	HA62	112MA6	5929
96.3	210	3.3	14.75	H062	100LA4	12000
95.7	203	1.1	29.89	HA52	90L2	4027
95.7	203	1.7	29.89	HA62	90L2	5944
93.9	207	1.0	30.45	H042	90L2	5578
91.5	220	1.1	15.96	H042	112MR4	5531
90.8	214	1.7	31.52	H052	90L2	7694

5.1 H/HA MOTORREDUCTORES (50Hz)

2.20 kW

n2 [rpm]	M2 [Nm]	fs	i	Reductor	Motor	Fr2 [N]
89.6	225	3.6	16.29	H062	112MR4	12000
89.4	218	2.9	32.00	H062	90L2	12000
89.0	227	1.1	15.96	H042	100LA4	5548
88.0	229	2.0	16.59	H052	112MR4	7689
87.2	231	3.5	16.29	H062	100LA4	12000
86.7	225	1.6	33.00	H052	90L2	7766
86.3	234	1.3	16.91	HA52	112MR4	4168
86.3	234	2.1	16.91	HA62	112MR4	6152
85.6	236	1.9	16.59	H052	100LA4	7730
84.0	240	1.2	16.91	HA52	100LA4	4207
84.0	240	2.1	16.91	HA62	100LA4	6209
83.4	244	1.7	11.51	H052	112M6	7753
82.6	244	3.4	17.67	H062	112MR4	12000
82.3	248	1.2	11.67	HA52	112M6	4235
82.3	248	1.9	11.67	HA62	112M6	6251
82.1	248	2.8	11.69	H062	112M6	12000
81.1	249	1.8	18.00	H052	112MR4	7810
80.8	252	1.6	11.51	H052	112MA6	7799
80.4	251	3.3	17.67	H062	100LA4	12000
79.7	256	1.2	11.67	HA52	112MA6	4280
79.7	256	1.8	11.67	HA62	112MA6	6317
79.6	256	2.7	11.69	H062	112MA6	12000
79.1	246	1.4	36.17	HA62	90L2	6334
78.9	256	1.8	18.00	H052	100LA4	7850
77.3	252	2.4	36.99	H062	90L2	12000
76.8	262	1.0	19.00	H042	112MR4	5619
75.8	269	2.7	12.67	H062	112M6	12000
74.7	270	0.9	19.00	H042	100LA4	5630
73.4	265	1.4	38.98	H052	90L2	8000
73.4	277	2.6	12.67	H062	112MA6	12000
73.1	276	1.7	19.97	H052	112MR4	7958
72.0	280	3.0	20.28	H062	112MR4	12000
71.4	283	1.0	20.46	HA52	112MR4	4441
71.4	283	1.6	20.46	HA62	112MR4	6555
71.1	284	1.6	19.97	H052	100LA4	7997
70.9	274	2.3	40.33	H062	90L2	12000
70.7	288	0.9	13.57	H042	112M6	5623
70.0	288	3.0	20.28	H062	100LA4	12000
69.4	291	1.0	20.46	HA52	100LA4	4482
69.4	291	1.6	20.46	HA62	100LA4	6616
67.4	302	1.5	14.24	H052	112M6	8000
67.4	299	1.6	21.67	H052	112MR4	8000
66.2	308	1.4	14.50	HA62	112M6	6721
65.5	308	1.5	21.67	H052	100LA4	8000
65.3	312	1.4	14.24	H052	112MA6	8000

5.1 H/HA MOTORREDUCTORES (50Hz)

2.20 kW

n2 [rpm]	M2 [Nm]	fs	i	Reductor	Motor	Fr2 [N]
65.1	313	2.3	14.75	H062	112M6	12000
64.1	318	1.4	14.50	HA62	112MA6	6792
63.6	306	1.1	44.95	HA62	90L2	6810
63.1	323	2.3	14.75	H062	112MA6	12000
63.0	309	1.2	45.36	H052	90L2	8000
62.7	322	2.6	23.27	H062	112MR4	12000
62.1	313	2.0	46.06	H062	90L2	12000
61.0	331	2.6	23.27	H062	100LA4	12000
59.4	328	3.7	48.13	H082	90L2	18000
59.1	341	1.4	24.71	H052	112MR4	8000
58.9	346	2.4	16.29	H062	112M6	12000
58.2	334	1.1	49.13	H052	90L2	8000
57.9	352	1.3	16.59	H052	112M6	8000
57.8	330	1.9	49.45	H063	90L2	12000
57.5	351	1.3	24.71	H052	100LA4	8000
57.4	351	1.2	25.43	HA62	112MR4	7048
57.4	332	1.1	49.80	HA63	90L2	7047
57.1	357	2.4	16.29	H062	112MA6	12000
56.8	355	2.4	25.70	H062	112MR4	12000
56.8	359	1.5	16.91	HA62	112M6	7074
56.0	363	1.3	16.59	H052	112MA6	8000
55.8	362	1.4	26.18	H052	112MR4	8000
55.8	361	1.2	25.43	HA62	100LA4	7113
55.3	365	2.3	25.70	H062	100LA4	12000
55.0	370	1.4	16.91	HA62	112MA6	7150
54.3	375	2.3	17.67	H062	112M6	12000
54.2	372	1.3	26.18	H052	100LA4	8000
53.3	382	1.3	18.00	H052	112M6	8000
52.6	387	2.3	17.67	H062	112MA6	12000
52.4	364	1.8	54.61	H063	90L2	12000
51.7	394	1.2	18.00	H052	112MA6	8000
51.3	393	1.2	28.44	H052	112MR4	8000
50.6	377	3.2	56.53	H083	90L2	18000
50.2	406	3.9	18.53	H082	112MA6	18000
49.9	404	1.2	28.44	H052	100LA4	8000
49.8	405	2.0	29.33	H062	112MR4	12000
48.4	417	1.9	29.33	H062	100LA4	12000
48.0	425	4.0	19.38	H082	112MA6	18000
47.3	430	2.1	20.28	H062	112M6	12000
46.9	430	3.7	31.15	H082	112MR4	18000
46.9	434	1.1	20.46	HA62	112M6	7538
46.3	435	1.1	31.52	H052	112MR4	8000
45.9	444	2.0	20.28	H062	112MA6	12000
45.6	442	1.9	32.00	H062	112MR4	12000
45.6	443	3.6	31.15	H082	100LA4	18000

5.1 H/HA MOTORREDUCTORES (50Hz)

2.20 kW

n2 [rpm]	M2 [Nm]	fs	i	Reductor	Motor	Fr2 [N]
45.5	448	1.1	20.46	HA62	112MA6	7618
45.1	448	1.1	31.52	H052	100LA4	8000
44.9	454	3.7	21.39	H082	112M6	18000
44.4	455	1.9	32.00	H062	100LA4	12000
43.5	469	3.6	21.39	H082	112MA6	18000
42.5	475	3.4	34.38	H082	112MR4	18000
42.1	453	1.4	68.00	H063	90L2	12000
42.1	484	3.5	22.80	H082	112M6	18000
41.3	494	1.8	23.27	H062	112M6	12000
41.3	488	3.3	34.38	H082	100LA4	18000
40.8	499	3.4	22.80	H082	112MA6	18000
40.0	510	1.8	23.27	H062	112MA6	12000
40.0	476	2.8	71.48	H083	90L2	18000
39.5	511	1.6	36.99	H062	112MR4	12000
38.9	524	0.9	24.71	H052	112M6	8000
38.4	525	1.5	36.99	H062	100LA4	12000
37.7	535	3.0	38.70	H082	112MR4	18000
37.7	540	0.8	25.43	HA62	112M6	8000
37.6	541	0.9	24.71	H052	112MA6	8000
37.5	539	0.9	38.98	H052	112MR4	8000
37.4	545	1.6	25.70	H062	112M6	12000
36.7	556	0.9	26.18	H052	112M6	8000
36.7	550	2.9	38.70	H082	100LA4	18000
36.6	557	0.8	25.43	HA62	112MA6	8000
36.3	526	2.6	78.87	H083	90L2	18000
36.2	557	1.5	40.33	H062	112MR4	12000
36.2	563	1.6	25.70	H062	112MA6	12000
36.1	564	3.0	26.60	H082	112M6	18000
35.2	573	1.5	40.33	H062	100LA4	12000
35.0	583	2.9	26.60	H082	112MA6	18000
34.4	592	2.8	27.88	H082	112M6	18000
34.2	591	2.7	42.75	H082	112MR4	18000
33.4	611	2.8	27.88	H082	112MA6	18000
33.4	570	2.4	85.56	H083	90L2	18000
33.3	572	1.1	85.82	H063	90L2	12000
33.2	607	2.6	42.75	H082	100LA4	18000
32.7	622	1.3	29.33	H062	112M6	12000
31.7	643	1.3	29.33	H062	112MA6	12000
31.7	636	1.3	46.06	H062	112MR4	12000
30.8	654	1.3	46.06	H062	100LA4	12000
30.8	661	2.5	31.15	H082	112M6	18000
30.3	665	2.4	48.13	H082	112MR4	18000
30.2	631	1.0	94.76	H063	90L2	12000
30.0	679	1.3	32.00	H062	112M6	12000
29.9	682	2.5	31.15	H082	112MA6	18000

5.1 H/HA MOTORREDUCTORES (50Hz)

2.20 kW

n2 [rpm]	M2 [Nm]	fs	i	Reductor	Motor	Fr2 [N]
29.5	669	1.3	49.45	H063	112MR4	12000
29.5	684	2.3	48.13	H082	100LA4	18000
29.2	654	2.1	98.09	H083	90L2	18000
29.1	701	1.3	32.00	H062	112MA6	12000
28.7	688	1.2	49.45	H063	100LA4	12000
27.9	729	2.3	34.38	H082	112M6	18000
27.1	753	2.2	34.38	H082	112MA6	18000
26.7	739	1.2	54.61	H063	112MR4	12000
26.0	759	1.1	54.61	H063	100LA4	12000
25.8	765	2.1	56.53	H083	112MR4	18000
25.4	752	1.8	112.78	H083	90L2	18000
25.1	786	2.0	56.53	H083	100LA4	18000
25.0	816	3.6	38.45	H102	112M6	22000
24.8	821	2.0	38.70	H082	112M6	18000
24.2	842	3.5	38.45	H102	112MA6	22000
24.0	848	2.0	38.70	H082	112MA6	18000
23.2	876	4.0	41.30	H102	112M6	22000
23.0	829	1.6	124.44	H083	90L2	18000
22.5	907	1.9	42.75	H082	112M6	18000
22.5	905	3.8	41.30	H102	112MA6	22000
21.8	936	1.8	42.75	H082	112MA6	18000
21.5	920	0.9	68.00	H063	112MR4	12000
21.0	939	0.9	68.00	H063	100LA4	12000
21.0	972	3.6	45.82	H102	112M6	22000
21.0	943	3.7	69.69	H103	112MR4	22000
20.8	977	0.9	46.06	H062	112M6	12000
20.4	967	1.9	71.48	H083	112MR4	18000
20.4	969	3.6	69.69	H103	100LA4	22000
20.3	1004	3.5	45.82	H102	112MA6	22000
20.1	947	1.4	142.15	H083	90L2	18000
19.9	1021	1.6	48.13	H082	112M6	18000
19.9	994	1.8	71.48	H083	100LA4	18000
19.9	956	2.7	143.42	H103	90L2	22000
19.3	1054	1.6	48.13	H082	112MA6	18000
18.6	1093	3.2	51.52	H102	112M6	22000
18.5	1067	1.7	78.87	H083	112MR4	18000
18.5	1031	1.3	154.76	H083	90L2	18000
18.3	1080	3.2	79.82	H103	112MR4	22000
18.1	1128	3.1	51.52	H102	112MA6	22000
18.0	1097	1.6	78.87	H083	100LA4	18000
17.8	1110	3.2	79.82	H103	100LA4	22000
17.8	1072	2.4	160.82	H103	90L2	22000
17.6	1082	1.2	162.35	H083	90L2	18000
17.3	1138	3.1	84.16	H103	112MR4	22000
17.1	1157	1.6	85.56	H083	112MR4	18000

5.1 H/HA MOTORREDUCTORES (50Hz)

2.20 kW

n2 [rpm]	M2 [Nm]	fs	i	Reductor	Motor	Fr2 [N]
17.0	1174	1.4	56.53	H083	112M6	18000
16.9	1170	3.0	84.16	H103	100LA4	22000
16.6	1190	1.5	85.56	H083	100LA4	18000
16.5	1212	1.4	56.53	H083	112MA6	18000
16.0	1194	1.1	179.13	H083	90L2	18000
15.8	1207	2.2	181.07	H103	90L2	22000
15.8	1251	4.0	89.97	H123	100LA4	30000
15.6	1263	2.8	93.36	H103	112MR4	22000
15.2	1299	2.7	93.36	H103	100LA4	22000
14.9	1327	1.4	98.09	H083	112MR4	18000
14.7	1300	1.0	195.07	H083	90L2	18000
14.7	1294	2.0	194.21	H103	90L2	22000
14.6	1354	2.6	100.07	H103	112MR4	22000
14.6	1357	3.7	100.29	H123	112MR4	30000
14.5	1364	1.3	98.09	H083	100LA4	18000
14.3	1399	3.8	67.32	H123	112M6	30000
14.2	1392	2.5	100.07	H103	100LA4	22000
14.2	1395	3.6	100.29	H123	100LA4	30000
13.8	1448	2.5	69.69	H103	112M6	22000
13.8	1444	3.6	67.32	H123	112MA6	30000
13.5	1466	3.4	108.34	H123	112MR4	30000
13.4	1485	1.3	71.48	H083	112M6	18000
13.3	1495	2.5	69.69	H103	112MA6	22000
13.3	1436	1.8	215.45	H103	90L2	22000
13.1	1507	3.3	108.34	H123	100LA4	30000
13.0	1533	1.2	71.48	H083	112MA6	18000
13.0	1532	3.4	73.71	H123	112M6	30000
12.9	1526	1.2	112.78	H083	112MR4	18000
12.6	1569	1.1	112.78	H083	100LA4	18000
12.6	1581	3.3	73.71	H123	112MA6	30000
12.3	1605	3.1	118.62	H123	112MR4	30000
12.1	1635	2.1	120.84	H103	112MR4	22000
12.0	1658	2.2	79.82	H103	112M6	22000
12.0	1650	3.0	118.62	H123	100LA4	30000
11.8	1681	2.1	120.84	H103	100LA4	22000
11.8	1617	1.7	242.59	H103	90L2	22000
11.7	1683	1.1	124.44	H083	112MR4	18000
11.7	1712	2.1	79.82	H103	112MA6	22000
11.5	1732	3.0	83.34	H123	112M6	30000
11.4	1731	1.0	124.44	H083	100LA4	18000
11.4	1749	2.1	84.16	H103	112M6	22000
11.4	1734	2.9	128.18	H123	112MR4	30000
11.2	1787	2.9	83.34	H123	112MA6	30000
11.1	1805	2.0	84.16	H103	112MA6	22000
11.1	1783	2.8	128.18	H123	100LA4	30000

5.1 H/HA MOTORREDUCTORES (50Hz)

2.20 kW

n2 [rpm]	M2 [Nm]	fs	i	Reductor	Motor	Fr2 [N]
10.9	1813	1.9	134.06	H103	112MR4	22000
10.7	1869	2.8	89.97	H123	112M6	30000
10.6	1865	1.9	134.06	H103	100LA4	22000
10.3	1923	0.9	142.15	H083	112MR4	18000
10.3	1940	1.9	93.36	H103	112M6	22000
10.3	1930	2.7	89.97	H123	112MA6	30000
10.2	1940	1.8	143.42	H103	112MR4	22000
10.1	1959	2.6	144.79	H123	112MR4	30000
10.0	1977	0.9	142.15	H083	100LA4	18000
10.0	2002	1.8	93.36	H103	112MA6	22000
9.9	1995	1.8	143.42	H103	100LA4	22000
9.8	2038	0.9	98.09	H083	112M6	18000
9.8	2014	2.5	144.79	H123	100LA4	30000
9.6	2079	1.8	100.07	H103	112M6	22000
9.6	2084	2.5	100.29	H123	112M6	30000
9.4	2100	2.4	155.22	H123	112MR4	30000
9.3	2146	1.7	100.07	H103	112MA6	22000
9.3	2151	2.4	100.29	H123	112MA6	30000
9.1	2175	1.6	160.82	H103	112MR4	22000
9.1	2159	2.3	155.22	H123	100LA4	30000
8.9	2251	2.3	108.34	H123	112M6	30000
8.8	2237	1.6	160.82	H103	100LA4	22000
8.6	2324	2.3	108.34	H123	112MA6	30000
8.4	2337	2.1	172.80	H123	112MR4	30000
8.2	2403	2.1	172.80	H123	100LA4	30000
8.1	2449	1.4	181.07	H103	112MR4	22000
8.1	2465	2.1	118.62	H123	112M6	30000
7.9	2511	1.5	120.84	H103	112M6	22000
7.8	2518	1.4	181.07	H103	100LA4	22000
7.8	2544	2.1	118.62	H123	112MA6	30000
7.7	2592	1.4	120.84	H103	112MA6	22000
7.7	2559	2.0	189.19	H123	112MR4	30000
7.5	2627	1.3	194.21	H103	112MR4	22000
7.5	2663	2.0	128.18	H123	112M6	30000
7.5	2631	1.9	189.19	H123	100LA4	30000
7.3	2701	1.3	194.21	H103	100LA4	22000
7.3	2749	1.9	128.18	H123	112MA6	30000
7.2	2786	1.3	134.06	H103	112M6	22000
7.0	2806	1.8	207.43	H123	112MR4	30000
6.9	2875	1.3	134.06	H103	112MA6	22000
6.8	2914	1.2	215.45	H103	112MR4	22000
6.8	2885	1.7	207.43	H123	100LA4	30000
6.7	2980	1.2	143.42	H103	112M6	22000
6.6	2997	1.2	215.45	H103	100LA4	22000
6.6	3008	1.7	144.79	H123	112M6	30000

5.1 H/HA MOTORREDUCTORES (50Hz)

2.20 kW

n2 [rpm]	M2 [Nm]	fs	i	Reductor	Motor	Fr2 [N]
6.5	3076	1.2	143.42	H103	112MA6	22000
6.4	3105	1.7	144.79	H123	112MA6	30000
6.3	3124	1.6	230.92	H123	112MR4	30000
6.2	3225	1.6	155.22	H123	112M6	30000
6.1	3212	1.6	230.92	H123	100LA4	30000
6.0	3281	1.1	242.59	H103	112MR4	22000
6.0	3329	1.6	155.22	H123	112MA6	30000
5.9	3374	1.1	242.59	H103	100LA4	22000
5.6	3590	1.5	172.80	H123	112M6	30000
5.6	3512	1.4	259.64	H123	112MR4	30000
5.5	3611	1.4	259.64	H123	100LA4	30000
5.4	3706	1.4	172.80	H123	112MA6	30000
5.1	3931	1.3	189.19	H123	112M6	30000
4.9	4035	0.9	194.21	H103	112M6	22000
4.9	4058	1.3	189.19	H123	112MA6	30000
4.6	4310	1.2	207.43	H123	112M6	30000
4.5	4449	1.2	207.43	H123	112MA6	30000

3.00 kW

n2 [rpm]	M2 [Nm]	fs	i	Reductor	Motor	Fr2 [N]
2278.6	12	2.5	1.27	H051	100L2	1259
2255.0	12	2.5	1.27	H051	100LA2	1263
2043.2	13	3.4	1.42	H051	100L2	1301
2022.0	13	3.4	1.42	H051	100LA2	1305
1364.7	20	2.3	2.13	H051	100L2	1466
1350.6	20	2.3	2.13	H051	100LA2	1470
1160.0	23	2.9	2.50	HA61	100L2	1986
1148.0	23	2.9	2.50	HA61	100LA2	1993
1139.3	24	1.6	1.27	H051	112MS4	1540
1127.8	24	2.2	2.57	H051	100L2	1549
1127.8	24	3.8	2.57	H061	100L2	2467
1123.6	25	1.6	1.27	H051	100LB4	1547
1116.1	24	2.2	2.57	H051	100LA2	1553
1116.1	24	3.7	2.57	H061	100LA2	2474
1087.5	26	3.5	1.33	HA61	112MS4	2029
1079.1	26	3.1	1.34	H061	112MS4	2494
1072.5	26	3.5	1.33	HA61	100LB4	2038
1064.2	26	3.1	1.34	H061	100LB4	2504
1021.6	27	2.2	1.42	H051	112MS4	1589
1007.5	28	2.2	1.42	H051	100LB4	1595
915.8	29	2.0	3.17	H051	100L2	1642
915.8	29	3.3	3.17	H061	100L2	2621
906.3	30	2.0	3.17	H051	100LA2	1647

5.1 H/HA MOTORREDUCTORES (50Hz)

3.00 kW

n2 [rpm]	M2 [Nm]	fs	i	Reductor	Motor	Fr2 [N]
906.3	30	3.3	3.17	H061	100LA2	2629
786.4	34	2.0	3.69	H051	100L2	1713
786.4	34	3.3	3.69	H061	100L2	2737
778.3	34	2.0	3.69	H051	100LA2	1717
778.3	34	3.3	3.69	H061	100LA2	2745
730.7	38	1.1	1.27	H051	112MB6	1740
725.0	37	1.8	4.00	H051	100L2	1751
725.0	37	3.0	4.00	H061	100L2	2800
717.5	37	1.8	4.00	H051	100LA2	1756
717.5	37	3.0	4.00	H061	100LA2	2808
697.5	40	2.3	1.33	HA61	112MB6	2353
692.1	41	2.1	1.34	H061	112MB6	2827
682.4	41	1.5	2.13	H051	112MS4	1773
682.4	41	2.9	2.13	H061	112MS4	2840
668.2	42	1.4	2.13	H051	100LB4	1783
668.2	42	2.9	2.13	H061	100LB4	2856
661.4	41	2.0	4.38	HA61	100L2	2395
655.2	43	1.5	1.42	H051	112MB6	1790
654.6	41	2.0	4.38	HA61	100LA2	2403
617.6	43	1.7	4.70	H032	100L2	2706
611.2	43	1.6	4.70	H032	100LA2	2712
608.1	44	1.6	4.77	H051	100L2	1834
608.1	44	2.7	4.77	H061	100L2	2940
601.8	45	1.6	4.77	H051	100LA2	1839
601.8	45	2.7	4.77	H061	100LA2	2948
580.0	48	1.9	2.50	HA61	112MS4	2502
572.0	49	1.9	2.50	HA61	100LB4	2514
563.9	49	1.4	2.57	H051	112MS4	1863
563.9	49	2.4	2.57	H061	112MS4	2991
563.9	47	3.8	5.14	HA52	100L2	2230
558.1	48	3.8	5.14	HA52	100LA2	2237
556.1	50	1.4	2.57	H051	100LB4	1869
556.1	50	2.4	2.57	H061	100LB4	3002
552.4	49	1.5	5.25	H051	100L2	1880
552.4	49	2.6	5.25	H061	100L2	3017
546.7	49	1.5	5.25	H051	100LA2	1885
546.7	49	2.6	5.25	H061	100LA2	3026
530.9	50	2.4	5.46	H042	100L2	3705
525.4	51	2.4	5.46	H042	100LA2	3715
506.3	52	3.7	5.73	H052	100L2	4825
501.1	53	3.7	5.73	H052	100LA2	4839
498.4	54	1.4	5.82	H051	100L2	1929
498.4	54	2.4	5.82	H061	100L2	3101
493.3	54	1.4	5.82	H051	100LA2	1934
493.3	54	2.3	5.82	H061	100LA2	3110

5.1 H/HA MOTORREDUCTORES (50Hz)

3.00 kW

n2 [rpm]	M2 [Nm]	fs	i	Reductor	Motor	Fr2 [N]
466.1	57	3.2	6.22	HA52	100L2	2376
465.6	57	1.4	6.23	H032	100L2	2868
461.3	58	3.1	6.22	HA52	100LA2	2384
460.7	58	1.4	6.23	H032	100LA2	2873
457.9	61	1.3	3.17	H051	112MS4	1961
457.9	61	2.1	3.17	H061	112MS4	3159
451.6	62	1.3	3.17	H051	100LB4	1967
451.6	62	2.1	3.17	H061	100LB4	3170
437.6	64	1.0	2.13	H051	112MB6	1979
437.6	64	2.0	2.13	H061	112MB6	3192
420.7	63	3.4	6.89	H052	100L2	5080
416.3	64	3.4	6.89	H052	100LA2	5095
403.5	66	1.8	7.19	H042	100L2	3965
399.3	66	1.8	7.19	H042	100LA2	3975
395.5	68	1.9	7.33	H061	100L2	3292
393.2	71	1.3	3.69	H051	112MS4	2032
393.2	71	2.1	3.69	H061	112MS4	3283
391.4	69	1.9	7.33	H061	100LA2	3301
387.8	72	1.3	3.69	H051	100LB4	2038
387.8	72	2.1	3.69	H061	100LB4	3294
386.7	69	3.8	7.50	H081	100L2	4000
382.7	70	3.7	7.50	H081	100LA2	4000
381.6	74	4.0	2.54	H081	132S6	4000
377.7	74	4.0	2.54	H081	132SA6	4000
375.0	71	2.5	7.73	HA52	100L2	2554
373.6	71	1.3	7.76	H032	100L2	2982
372.0	75	1.3	2.50	HA61	112MB6	2901
371.1	72	2.5	7.73	HA52	100LA2	2563
371.1	72	4.0	7.73	HA62	100LA2	3783
369.7	72	1.3	7.76	H032	100LA2	2988
365.9	77	3.8	2.54	H081	112MB6	4000
362.5	77	1.2	4.00	H051	112MS4	2070
362.5	77	2.0	4.00	H061	112MS4	3349
361.7	78	0.9	2.57	H051	112MB6	2067
361.7	78	1.6	2.57	H061	112MB6	3346
357.5	78	1.2	4.00	H051	100LB4	2076
357.5	78	1.9	4.00	H061	100LB4	3360
346.3	77	1.6	8.38	H061	100L2	3402
343.4	78	3.4	8.44	H081	100L2	4000
342.7	78	1.6	8.38	H061	100LA2	3411
340.1	78	3.3	8.53	H052	100L2	5380
339.9	79	3.3	8.44	H081	100LA2	4000
336.6	79	3.2	8.53	H052	100LA2	5395
330.7	84	1.3	4.38	HA61	112MS4	3017
327.1	81	1.2	8.87	H032	100L2	3044

5.1 H/HA MOTORREDUCTORES (50Hz)

3.00 kW

n2 [rpm]	M2 [Nm]	fs	i	Reductor	Motor	Fr2 [N]
323.9	86	1.3	4.38	HA61	100LB4	3038
323.7	82	1.2	8.87	H032	100LA2	3049
310.7	89	3.6	4.67	H081	112MS4	4000
308.8	89	1.1	4.70	H032	112MS4	3036
306.4	91	3.5	4.67	H081	100LB4	4000
304.0	91	1.0	4.77	H051	112MS4	2149
304.0	91	1.8	4.77	H061	112MS4	3491
303.3	88	3.2	9.56	H052	100L2	5544
302.4	91	1.0	4.70	H032	100LB4	3044
300.7	88	2.5	9.64	HA52	100L2	2749
300.7	88	3.9	9.64	HA62	100L2	4058
300.1	88	3.1	9.56	H052	100LA2	5559
299.8	93	1.0	4.77	H051	100LB4	2155
299.8	93	1.7	4.77	H061	100LB4	3502
298.5	94	3.5	3.25	H081	132S6	4000
297.6	89	2.5	9.64	HA52	100LA2	2759
297.6	89	3.9	9.64	HA62	100LA2	4072
295.4	95	3.4	3.25	H081	132SA6	4000
293.7	96	1.4	3.17	H061	112MB6	3514
286.2	98	3.3	3.25	H081	112MB6	4000
285.9	93	1.1	10.14	H032	100L2	3099
282.9	94	1.1	10.14	H032	100LA2	3103
281.9	98	2.5	5.14	HA52	112MS4	2809
281.9	98	3.9	5.14	HA62	112MS4	4146
276.2	101	1.0	5.25	H051	112MS4	2191
276.2	101	1.7	5.25	H061	112MS4	3568
276.1	100	2.4	5.14	HA52	100LB4	2829
276.1	100	3.8	5.14	HA62	100LB4	4175
270.5	103	1.0	5.25	H051	100LB4	2200
270.5	103	1.7	5.25	H061	100LB4	3585
265.4	104	1.5	5.46	H042	112MS4	4319
261.8	106	3.1	5.54	H081	112MS4	4000
260.6	108	3.0	3.72	H081	132S6	4000
260.0	106	1.5	5.46	H042	100LB4	4337
258.2	108	3.1	5.54	H081	100LB4	4000
257.9	109	3.0	3.72	H081	132SA6	4000
253.2	109	2.4	5.73	H052	112MS4	5779
252.2	111	1.4	3.69	H061	112MB6	3634
251.9	105	2.8	11.51	H052	100L2	5812
249.9	112	2.9	3.72	H081	112MB6	4000
249.3	106	2.7	11.51	H052	100LA2	5827
249.2	112	1.5	5.82	H061	112MS4	3649
248.6	107	2.0	11.67	HA52	100L2	2930
248.6	107	3.1	11.67	HA62	100L2	4324
247.9	111	2.3	5.73	H052	100LB4	5809

5.1 H/HA MOTORREDUCTORES (50Hz)

3.00 kW

n2 [rpm]	M2 [Nm]	fs	i	Reductor	Motor	Fr2 [N]
246.6	108	1.0	11.76	H032	100L2	3149
246.0	108	1.9	11.67	HA52	100LA2	2940
246.0	108	3.1	11.67	HA62	100LA2	4339
245.8	108	1.7	11.80	H042	100L2	4416
244.1	114	1.5	5.82	H061	100LB4	3665
243.2	109	1.7	11.80	H042	100LA2	4425
242.5	116	2.9	4.00	H081	132S6	4000
240.0	117	2.9	4.00	H081	132SA6	4000
238.4	117	2.9	6.08	H081	112MS4	4000
233.4	119	2.9	6.08	H081	100LB4	4000
233.0	118	2.0	6.22	HA52	112MS4	2993
233.0	118	3.2	6.22	HA62	112MS4	4418
232.5	121	1.3	4.00	H061	112MB6	3696
232.5	121	2.8	4.00	H081	112MB6	4000
228.2	121	2.0	6.22	HA52	100LB4	3014
228.2	121	3.2	6.22	HA62	100LB4	4449
213.7	124	1.5	13.57	H042	100L2	4533
212.1	132	0.9	4.38	HA61	112MB6	3499
211.5	126	1.5	13.57	H042	100LA2	4541
211.4	126	1.0	13.72	H032	100L2	3185
210.3	131	2.2	6.89	H052	112MS4	6042
209.2	127	1.0	13.72	H032	100LA2	3187
207.9	135	2.5	4.67	H081	132S6	4000
206.0	134	2.2	6.89	H052	100LB4	6071
205.7	136	2.5	4.67	H081	132SA6	4000
203.7	130	2.5	14.24	H052	100L2	6119
201.7	136	1.2	7.19	H042	112MS4	4539
201.6	132	2.4	14.24	H052	100LA2	6134
200.0	133	1.6	14.50	HA52	100L2	3150
200.0	133	2.4	14.50	HA62	100L2	4649
199.3	141	2.4	4.67	H081	112MB6	4000
197.9	134	1.6	14.50	HA52	100LA2	3161
197.9	134	2.3	14.50	HA62	100LA2	4665
197.7	141	1.2	7.33	H061	112MS4	3700
197.6	139	1.1	7.19	H042	100LB4	4554
196.6	135	3.9	14.75	H062	100L2	10992
196.2	140	3.9	7.39	H062	112MS4	10970
195.0	144	1.2	4.77	H061	112MB6	3700
194.6	136	3.8	14.75	H062	100LA2	11025
193.6	144	1.2	7.33	H061	100LB4	3700
193.3	144	2.4	7.50	H081	112MS4	4000
192.1	143	3.8	7.39	H062	100LB4	11035
189.3	147	2.4	7.50	H081	100LB4	4000
187.5	147	1.6	7.73	HA52	112MS4	3218
187.5	147	2.6	7.73	HA62	112MS4	4750

5.1 H/HA MOTORREDUCTORES (50Hz)

3.00 kW

n2 [rpm]	M2 [Nm]	fs	i	Reductor	Motor	Fr2 [N]
183.6	150	1.6	7.73	HA52	100LB4	3241
183.6	150	2.5	7.73	HA62	100LB4	4783
181.7	146	1.3	15.96	H042	100L2	4657
180.8	154	1.6	5.14	HA52	112MB6	3257
180.8	154	2.6	5.14	HA62	112MB6	4808
180.5	154	3.4	5.38	H062	132S6	11220
179.8	148	1.3	15.96	H042	100LA2	4665
178.6	156	3.4	5.38	H062	132SA6	11252
177.1	158	1.1	5.25	H061	112MB6	3700
176.2	151	4.0	16.29	H062	100LA2	11335
175.1	160	2.2	5.54	H081	132S6	4000
174.8	152	2.2	16.59	H052	100L2	6337
173.3	162	2.1	5.54	H081	132SA6	4000
173.1	161	1.1	8.38	H061	112MS4	3700
173.0	153	2.2	16.59	H052	100LA2	6352
173.0	161	3.3	5.38	H062	112MB6	11351
171.7	162	2.2	8.44	H081	112MS4	4000
171.5	155	1.5	16.91	HA52	100L2	3316
171.5	155	2.4	16.91	HA62	100L2	4894
170.6	161	3.7	8.50	H062	112MS4	11404
170.3	163	1.0	5.46	H042	112MB6	4643
170.0	162	2.1	8.53	H052	112MS4	6338
169.7	156	1.4	16.91	HA52	100LA2	3327
169.7	156	2.4	16.91	HA62	100LA2	4911
169.6	164	1.0	8.38	H061	100LB4	3700
169.0	164	4.0	8.40	H101	100LB4	5000
168.2	165	2.1	8.44	H081	100LB4	4000
167.9	167	2.1	5.54	H081	112MB6	4000
167.1	165	3.6	8.50	H062	100LB4	11470
166.5	165	2.1	8.53	H052	100LB4	6366
164.2	162	3.8	17.67	H062	100L2	11559
163.4	170	3.4	5.93	H062	132S6	11529
162.7	169	1.2	8.91	H042	112MS4	4684
162.5	163	3.8	17.67	H062	100LA2	11592
162.4	171	1.6	5.73	H052	112MB6	6389
161.8	172	3.4	5.93	H062	132SA6	11562
161.1	165	2.1	18.00	H052	100L2	6451
159.8	176	1.0	5.82	H061	112MB6	3700
159.5	176	2.0	6.08	H081	132S6	4000
159.4	166	2.1	18.00	H052	100LA2	6465
159.3	173	1.2	8.91	H042	100LB4	4697
157.8	178	2.0	6.08	H081	132SA6	4000
156.7	177	3.3	5.93	H062	112MB6	11662
155.7	180	3.7	6.23	H101	132S6	5000
154.5	178	3.4	9.39	H062	112MS4	11717

5.1 H/HA MOTORREDUCTORES (50Hz)

3.00 kW

n2 [rpm]	M2 [Nm]	fs	i	Reductor	Motor	Fr2 [N]
154.1	182	3.7	6.23	H101	132SA6	5000
152.9	184	1.9	6.08	H081	112MB6	4000
152.6	174	1.1	19.00	H042	100L2	4774
151.6	181	2.0	9.56	H052	112MS4	6492
151.3	182	3.3	9.39	H062	100LB4	11783
151.1	176	1.1	19.00	H042	100LA2	4780
150.4	183	1.6	9.64	HA52	112MS4	3464
150.4	183	2.5	9.64	HA62	112MS4	5113
149.5	186	1.4	6.22	HA52	112MB6	3471
149.5	186	2.1	6.22	HA62	112MB6	5123
149.3	188	3.6	6.23	H101	112MB6	5000
148.5	185	2.0	9.56	H052	100LB4	6520
147.3	187	1.6	9.64	HA52	100LB4	3488
147.3	187	2.5	9.64	HA62	100LB4	5149
145.2	183	1.9	19.97	H052	100L2	6594
143.7	185	1.9	19.97	H052	100LA2	6608
143.0	186	3.4	20.28	H062	100L2	12000
141.7	187	1.2	20.46	HA52	100L2	3533
141.7	187	1.8	20.46	HA62	100L2	5215
141.5	188	3.4	20.28	H062	100LA2	12000
140.6	196	1.2	10.31	H042	112MS4	4764
140.3	189	1.1	20.46	HA52	100LA2	3545
140.3	189	1.8	20.46	HA62	100LA2	5233
137.7	200	1.2	10.31	H042	100LB4	4774
134.9	206	1.5	6.89	H052	112MB6	6632
133.8	198	1.8	21.67	H052	100L2	6703
132.5	200	1.8	21.67	H052	100LA2	6717
131.2	212	2.7	7.39	H062	132S6	12000
131.2	212	4.0	7.39	H082	132S6	15375
129.9	214	2.7	7.39	H062	132SA6	12000
129.8	214	3.9	7.39	H082	132SA6	15421
129.3	217	1.7	7.50	H081	132S6	4000
128.6	218	3.1	7.55	H101	132S6	5000
128.0	219	1.7	7.50	H081	132SA6	4000
127.2	221	3.1	7.55	H101	132SA6	5000
126.0	218	1.8	11.51	H052	112MS4	6732
125.8	221	2.6	7.39	H062	112MB6	12000
124.6	213	3.0	23.27	H062	100L2	12000
124.3	221	1.3	11.67	HA52	112MS4	3691
124.3	221	2.0	11.67	HA62	112MS4	5448
124.1	222	2.9	11.69	H062	112MS4	12000
124.0	226	1.6	7.50	H081	112MB6	4000
123.4	223	1.7	11.51	H052	100LB4	6758
123.3	215	3.0	23.27	H062	100LA2	12000
123.3	228	3.0	7.55	H101	112MB6	5000

5.1 H/HA MOTORREDUCTORES (50Hz)

3.00 kW

n2 [rpm]	M2 [Nm]	fs	i	Reductor	Motor	Fr2 [N]
122.9	224	1.1	11.80	H042	112MS4	4821
121.7	226	1.2	11.67	HA52	100LB4	3717
121.7	226	1.9	11.67	HA62	100LB4	5486
121.5	226	2.9	11.69	H062	100LB4	12000
120.9	230	3.7	8.02	H082	132S6	15737
120.3	229	1.1	11.80	H042	100LB4	4828
120.3	231	1.1	7.73	HA52	112MB6	3732
120.3	231	1.7	7.73	HA62	112MB6	5508
119.7	232	3.6	8.02	H082	132SA6	15784
117.4	226	1.6	24.71	H052	100L2	6873
116.2	228	1.5	24.71	H052	100LA2	6886
115.5	243	2.8	8.40	H101	132S6	5000
114.9	244	1.5	8.44	H081	132S6	4000
114.5	240	2.9	12.67	H062	112MS4	12000
114.3	246	2.8	8.40	H101	132SA6	5000
114.1	243	2.6	8.50	H062	132S6	12000
114.0	233	1.4	25.43	HA62	100L2	5607
113.7	247	1.5	8.44	H081	132SA6	4000
112.9	246	2.6	8.50	H062	132SA6	12000
112.9	235	2.7	25.70	H062	100L2	12000
112.9	235	1.4	25.43	HA62	100LA2	5626
112.1	245	2.9	12.67	H062	100LB4	12000
111.7	238	2.7	25.70	H062	100LA2	12000
110.8	240	1.5	26.18	H052	100L2	6945
110.7	254	2.7	8.40	H101	112MB6	5000
110.1	255	1.4	8.44	H081	112MB6	4000
109.6	242	1.5	26.18	H052	100LA2	6957
109.6	253	3.7	8.85	H082	132S6	16183
109.4	254	2.5	8.50	H062	112MB6	12000
109.1	255	1.4	8.53	H052	112MB6	6888
108.5	256	3.7	8.85	H082	132SA6	16230
106.8	257	1.0	13.57	H042	112MS4	4857
104.6	263	1.0	13.57	H042	100LB4	4861
103.4	269	2.3	9.39	H062	132S6	12000
102.3	272	2.3	9.39	H062	132SA6	12000
102.0	260	1.4	28.44	H052	100L2	7043
101.8	270	1.6	14.24	H052	112MS4	6982
100.9	263	1.4	28.44	H052	100LA2	7055
100.0	275	1.0	14.50	HA52	112MS4	3969
100.0	275	1.5	14.50	HA62	112MS4	5858
99.7	276	1.6	14.24	H052	100LB4	7004
99.1	280	2.2	9.39	H062	112MB6	12000
98.9	268	2.2	29.33	H062	100L2	12000
98.3	280	2.5	14.75	H062	112MS4	12000
97.9	281	1.0	14.50	HA52	100LB4	3996

5.1 H/HA MOTORREDUCTORES (50Hz)

3.00 kW

n2 [rpm]	M2 [Nm]	fs	i	Reductor	Motor	Fr2 [N]
97.9	281	1.5	14.50	HA62	100LB4	5898
97.8	271	2.2	29.33	H062	100LA2	12000
97.3	286	1.4	9.56	H052	112MB6	7012
96.4	288	1.1	9.64	HA52	112MB6	4017
96.4	288	1.7	9.64	HA62	112MB6	5929
96.3	286	2.5	14.75	H062	100LB4	12000
92.0	288	1.3	31.52	H052	100L2	7158
91.1	291	1.3	31.52	H052	100LA2	7169
90.6	293	2.2	32.00	H062	100L2	12000
89.7	296	2.2	32.00	H062	100LA2	12000
89.0	309	2.6	16.29	H062	112MS4	12000
88.1	315	3.7	11.01	H082	132S6	17194
87.4	315	1.4	16.59	H052	112MS4	7138
87.2	315	2.5	16.29	H062	100LB4	12000
87.2	319	3.6	11.01	H082	132SA6	17243
85.7	321	0.9	16.91	HA52	112MS4	4177
85.7	321	1.6	16.91	HA62	112MS4	6166
85.6	321	1.4	16.59	H052	100LB4	7158
84.4	315	3.8	34.38	H082	100L2	17467
84.0	328	0.9	16.91	HA52	100LB4	4207
84.0	328	1.5	16.91	HA62	100LB4	6209
83.5	318	3.8	34.38	H082	100LA2	17517
83.0	335	2.0	11.69	H062	132S6	12000
82.1	338	2.0	11.69	H062	132SA6	12000
82.1	335	2.5	17.67	H062	112MS4	12000
80.8	344	1.2	11.51	H052	112MB6	7186
80.6	341	1.3	18.00	H052	112MS4	7212
80.4	342	2.4	17.67	H062	100LB4	12000
79.7	348	0.8	11.67	HA52	112MB6	4280
79.7	348	1.3	11.67	HA62	112MB6	6317
79.6	349	2.0	11.69	H062	112MB6	12000
78.9	349	1.3	18.00	H052	100LB4	7229
78.4	339	1.8	36.99	H062	100L2	12000
77.6	342	1.8	36.99	H062	100LA2	12000
76.6	363	2.0	12.67	H062	132S6	12000
75.8	367	2.0	12.67	H062	132SA6	12000
74.9	354	3.4	38.70	H082	100L2	18000
74.4	357	1.0	38.98	H052	100L2	7362
74.2	358	3.4	38.70	H082	100LA2	18000
73.6	360	1.0	38.98	H052	100LA2	7370
73.4	378	1.9	12.67	H062	112MB6	12000
72.6	379	1.2	19.97	H052	112MS4	7293
71.9	369	1.7	40.33	H062	100L2	12000
71.9	387	3.8	13.50	H082	132S6	18000
71.5	385	2.2	20.28	H062	112MS4	12000

5.1 H/HA MOTORREDUCTORES (50Hz)

3.00 kW

n2 [rpm]	M2 [Nm]	fs	i	Reductor	Motor	Fr2 [N]
71.2	373	1.7	40.33	H062	100LA2	12000
71.1	387	1.2	19.97	H052	100LB4	7308
71.1	391	3.8	13.50	H082	132SA6	18000
70.9	388	1.2	20.46	HA62	112MS4	6570
70.0	393	2.2	20.28	H062	100LB4	12000
69.4	396	1.2	20.46	HA62	100LB4	6616
68.9	403	3.6	13.50	H082	112MB6	18000
67.8	406	3.9	21.39	H082	112MS4	18000
67.8	391	3.1	42.75	H082	100L2	18000
67.1	395	3.0	42.75	H082	100LA2	18000
66.9	411	1.1	21.67	H052	112MS4	7346
66.4	414	3.9	21.39	H082	100LB4	18000
65.8	422	1.7	14.75	H062	132S6	12000
65.5	420	1.1	21.67	H052	100LB4	7358
65.3	425	1.1	14.24	H052	112MB6	7332
65.1	427	1.7	14.75	H062	132SA6	12000
65.1	427	3.7	14.90	H082	132S6	18000
64.4	431	3.7	14.90	H082	132SA6	18000
64.1	433	1.0	14.50	HA62	112MB6	6792
63.6	432	3.7	22.80	H082	112MS4	18000
63.1	441	1.7	14.75	H062	112MB6	12000
63.0	422	1.5	46.06	H062	100L2	12000
62.4	445	3.5	14.90	H082	112MB6	18000
62.3	426	1.5	46.06	H062	100LA2	12000
62.3	441	1.9	23.27	H062	112MS4	12000
62.3	442	3.6	22.80	H082	100LB4	18000
61.0	451	1.9	23.27	H062	100LB4	12000
60.2	441	2.7	48.13	H082	100L2	18000
59.6	466	1.8	16.29	H062	132S6	12000
59.6	445	2.7	48.13	H082	100LA2	18000
58.9	471	1.8	16.29	H062	132SA6	12000
58.7	469	1.0	24.71	H052	112MS4	7408
58.6	443	1.4	49.45	H063	100L2	12000
58.4	476	3.3	16.62	H082	132S6	18000
58.0	448	1.4	49.45	H063	100LA2	12000
57.8	481	3.3	16.62	H082	132SA6	18000
57.5	479	1.0	24.71	H052	100LB4	7414
57.1	486	1.7	16.29	H062	112MB6	12000
57.0	482	0.9	25.43	HA62	112MS4	7064
56.4	487	1.7	25.70	H062	112MS4	12000
56.0	496	1.0	16.59	H052	112MB6	7389
56.0	496	3.2	16.62	H082	112MB6	18000
55.8	493	0.9	25.43	HA62	100LB4	7113
55.4	497	1.0	26.18	H052	112MS4	7424
55.3	498	1.7	25.70	H062	100LB4	12000

5.1 H/HA MOTORREDUCTORES (50Hz)

3.00 kW

n2 [rpm]	M2 [Nm]	fs	i	Reductor	Motor	Fr2 [N]
55.0	505	1.0	16.91	HA62	112MB6	7150
54.9	506	1.7	17.67	H062	132S6	12000
54.5	505	3.2	26.60	H082	112MS4	18000
54.3	511	1.7	17.67	H062	132SA6	12000
54.2	507	1.0	26.18	H052	100LB4	7429
53.4	515	3.1	26.60	H082	100LB4	18000
53.1	489	1.3	54.61	H063	100L2	12000
52.6	528	1.7	17.67	H062	112MB6	12000
52.6	494	1.3	54.61	H063	100LA2	12000
52.4	531	3.0	18.53	H082	132S6	18000
52.0	529	3.0	27.88	H082	112MS4	18000
51.8	536	2.9	18.53	H082	132SA6	18000
51.3	507	2.4	56.53	H083	100L2	18000
51.0	539	0.9	28.44	H052	112MS4	7436
50.9	540	3.0	27.88	H082	100LB4	18000
50.8	512	2.3	56.53	H083	100LA2	18000
50.2	553	2.8	18.53	H082	112MB6	18000
50.0	555	3.0	19.38	H082	132S6	18000
49.5	561	3.0	19.38	H082	132SA6	18000
49.4	556	1.4	29.33	H062	112MS4	12000
48.4	568	1.4	29.33	H062	100LB4	12000
48.0	579	2.9	19.38	H082	112MB6	18000
47.8	581	1.5	20.28	H062	132S6	12000
47.3	587	1.5	20.28	H062	132SA6	12000
46.5	591	2.7	31.15	H082	112MS4	18000
45.9	606	1.5	20.28	H062	112MB6	12000
45.6	603	2.7	31.15	H082	100LB4	18000
45.4	613	2.7	21.39	H082	132S6	18000
45.3	607	1.4	32.00	H062	112MS4	12000
44.9	619	2.7	21.39	H082	132SA6	18000
44.4	620	1.4	32.00	H062	100LB4	12000
43.5	639	2.6	21.39	H082	112MB6	18000
42.5	653	2.6	22.80	H082	132S6	18000
42.2	652	2.5	34.38	H082	112MS4	18000
42.1	660	2.5	22.80	H082	132SA6	18000
41.7	666	1.3	23.27	H062	132S6	12000
41.3	673	1.3	23.27	H062	132SA6	12000
41.3	666	2.4	34.38	H082	100LB4	18000
40.8	681	2.5	22.80	H082	112MB6	18000
40.6	641	2.1	71.48	H083	100L2	18000
40.2	647	2.1	71.48	H083	100LA2	18000
40.0	695	1.3	23.27	H062	112MB6	12000
39.2	702	1.1	36.99	H062	112MS4	12000
38.4	716	1.1	36.99	H062	100LB4	12000
37.7	736	1.2	25.70	H062	132S6	12000

5.1 H/HA MOTORREDUCTORES (50Hz)

3.00 kW

n2 [rpm]	M2 [Nm]	fs	i	Reductor	Motor	Fr2 [N]
37.7	729	3.8	38.45	H102	112MS4	22000
37.5	734	2.2	38.70	H082	112MS4	18000
37.4	744	1.2	25.70	H062	132SA6	12000
36.9	745	3.8	38.45	H102	100LB4	22000
36.7	750	2.1	38.70	H082	100LB4	18000
36.5	762	2.2	26.60	H082	132S6	18000
36.3	715	3.7	79.82	H103	100L2	22000
36.2	768	1.2	25.70	H062	112MB6	12000
36.1	770	2.2	26.60	H082	132SA6	18000
36.0	765	1.1	40.33	H062	112MS4	12000
36.0	723	3.6	79.82	H103	100LA2	22000
35.2	781	1.1	40.33	H062	100LB4	12000
35.0	795	2.1	26.60	H082	112MB6	18000
34.8	798	2.1	27.88	H082	132S6	18000
34.5	754	3.5	84.16	H103	100L2	22000
34.4	807	2.1	27.88	H082	132SA6	18000
34.1	762	3.4	84.16	H103	100LA2	22000
33.9	811	2.0	42.75	H082	112MS4	18000
33.9	767	1.8	85.56	H083	100L2	18000
33.5	775	1.7	85.56	H083	100LA2	18000
33.4	833	2.0	27.88	H082	112MB6	18000
33.2	828	1.9	42.75	H082	100LB4	18000
31.7	876	1.0	29.33	H062	112MB6	12000
31.6	880	3.8	30.72	H102	132S6	22000
31.6	869	3.8	45.82	H102	112MS4	22000
31.5	874	1.0	46.06	H062	112MS4	12000
31.2	889	3.8	30.72	H102	132SA6	22000
31.1	892	1.9	31.15	H082	132S6	18000
31.1	837	3.1	93.36	H103	100L2	22000
31.0	887	3.7	45.82	H102	100LB4	22000
30.8	892	1.0	46.06	H062	100LB4	12000
30.8	901	1.9	31.15	H082	132SA6	18000
30.7	845	3.1	93.36	H103	100LA2	22000
30.3	918	3.7	30.72	H102	112MB6	22000
30.1	913	1.8	48.13	H082	112MS4	18000
29.9	931	1.8	31.15	H082	112MB6	18000
29.6	879	1.5	98.09	H083	100L2	18000
29.5	932	1.7	48.13	H082	100LB4	18000
29.3	919	0.9	49.45	H063	112MS4	12000
29.3	888	1.5	98.09	H083	100LA2	18000
29.0	897	2.9	100.07	H103	100L2	22000
28.7	938	0.9	49.45	H063	100LB4	12000
28.7	906	2.9	100.07	H103	100LA2	22000
28.4	979	3.4	34.20	H102	132S6	22000
28.2	984	1.7	34.38	H082	132S6	18000

5.1 H/HA MOTORREDUCTORES (50Hz)

3.00 kW

n2 [rpm]	M2 [Nm]	fs	i	Reductor	Motor	Fr2 [N]
28.1	990	3.4	34.20	H102	132SA6	22000
28.1	977	3.4	51.52	H102	112MS4	22000
27.9	995	1.7	34.38	H082	132SA6	18000
27.6	998	3.3	51.52	H102	100LB4	22000
27.2	1022	3.3	34.20	H102	112MB6	22000
27.1	1027	1.6	34.38	H082	112MB6	18000
25.7	1050	1.5	56.53	H083	112MS4	18000
25.7	1011	1.3	112.78	H083	100L2	18000
25.4	1021	1.3	112.78	H083	100LA2	18000
25.2	1101	2.7	38.45	H102	132S6	22000
25.1	1108	1.5	38.70	H082	132S6	18000
25.1	1072	1.5	56.53	H083	100LB4	18000
25.0	1113	2.6	38.45	H102	132SA6	22000
24.8	1120	1.5	38.70	H082	132SA6	18000
24.2	1149	2.6	38.45	H102	112MB6	22000
24.0	1156	1.5	38.70	H082	112MB6	18000
24.0	1083	2.4	120.84	H103	100L2	22000
23.8	1094	2.4	120.84	H103	100LA2	22000
23.5	1183	2.9	41.30	H102	132S6	22000
23.3	1115	1.2	124.44	H083	100L2	18000
23.2	1195	2.9	41.30	H102	132SA6	22000
23.1	1127	1.2	124.44	H083	100LA2	18000
22.7	1224	1.4	42.75	H082	132S6	18000
22.5	1237	1.4	42.75	H082	132SA6	18000
22.5	1234	2.8	41.30	H102	112MB6	22000
21.8	1277	1.3	42.75	H082	112MB6	18000
21.6	1201	2.2	134.06	H103	100L2	22000
21.5	1250	4.0	67.32	H123	112MS4	30000
21.4	1214	2.2	134.06	H103	100LA2	22000
21.2	1312	2.6	45.82	H102	132S6	22000
21.1	1277	3.9	67.32	H123	100LB4	30000
21.0	1326	2.6	45.82	H102	132SA6	22000
20.8	1294	2.7	69.69	H103	112MS4	22000
20.4	1322	2.6	69.69	H103	100LB4	22000
20.3	1328	1.4	71.48	H083	112MS4	18000
20.3	1369	2.5	45.82	H102	112MB6	22000
20.2	1378	1.2	48.13	H082	132S6	18000
20.2	1285	2.0	143.42	H103	100L2	22000
20.0	1299	2.0	143.42	H103	100LA2	22000
19.9	1393	1.2	48.13	H082	132SA6	18000
19.9	1356	1.3	71.48	H083	100LB4	18000
19.7	1369	3.7	73.71	H123	112MS4	30000
19.3	1438	1.2	48.13	H082	112MB6	18000
19.3	1398	3.6	73.71	H123	100LB4	30000
18.8	1475	2.3	51.52	H102	132S6	22000

5.1 H/HA MOTORREDUCTORES (50Hz)

3.00 kW

n2 [rpm]	M2 [Nm]	fs	i	Reductor	Motor	Fr2 [N]
18.6	1491	2.3	51.52	H102	132SA6	22000
18.4	1465	1.2	78.87	H083	112MS4	18000
18.2	1482	2.4	79.82	H103	112MS4	22000
18.1	1539	2.3	51.52	H102	112MB6	22000
18.0	1496	1.2	78.87	H083	100LB4	18000
18.0	1441	1.8	160.82	H103	100L2	22000
17.8	1456	1.8	160.82	H103	100LA2	22000
17.8	1514	2.3	79.82	H103	100LB4	22000
17.5	1556	2.4	55.47	H103	132S6	22000
17.4	1567	3.4	55.87	H123	132S6	30000
17.4	1548	3.2	83.34	H123	112MS4	30000
17.3	1572	2.3	55.47	H103	132SA6	22000
17.2	1563	2.2	84.16	H103	112MS4	22000
17.2	1583	3.3	55.87	H123	132SA6	30000
17.0	1580	3.2	83.34	H123	100LB4	30000
16.9	1589	1.1	85.56	H083	112MS4	18000
16.9	1596	2.2	84.16	H103	100LB4	22000
16.6	1623	1.1	85.56	H083	100LB4	18000
16.1	1671	3.0	89.97	H123	112MS4	30000
16.0	1623	1.6	181.07	H103	100L2	22000
15.8	1640	1.6	181.07	H103	100LA2	22000
15.8	1706	2.9	89.97	H123	100LB4	30000
15.5	1734	2.0	93.36	H103	112MS4	22000
15.2	1771	2.0	93.36	H103	100LB4	22000
14.9	1740	1.5	194.21	H103	100L2	22000
14.8	1822	1.0	98.09	H083	112MS4	18000
14.8	1759	1.5	194.21	H103	100LA2	22000
14.5	1860	1.0	98.09	H083	100LB4	18000
14.5	1859	1.9	100.07	H103	112MS4	22000
14.5	1863	2.7	100.29	H123	112MS4	30000
14.4	1888	2.8	67.32	H123	132S6	30000
14.3	1908	2.8	67.32	H123	132SA6	30000
14.2	1898	1.8	100.07	H103	100LB4	22000
14.2	1902	2.6	100.29	H123	100LB4	30000
13.9	1954	1.9	69.69	H103	132S6	22000
13.8	1975	1.9	69.69	H103	132SA6	22000
13.8	1969	2.7	67.32	H123	112MB6	30000
13.6	2004	0.9	71.48	H083	132S6	18000
13.5	1931	1.4	215.45	H103	100L2	22000
13.4	2025	0.9	71.48	H083	132SA6	18000
13.4	2012	2.5	108.34	H123	112MS4	30000
13.3	1951	1.3	215.45	H103	100LA2	22000
13.3	2038	1.8	69.69	H103	112MB6	22000
13.2	2067	2.5	73.71	H123	132S6	30000
13.1	2055	2.4	108.34	H123	100LB4	30000

5.1 H/HA MOTORREDUCTORES (50Hz)

3.00 kW

n2 [rpm]	M2 [Nm]	fs	i	Reductor	Motor	Fr2 [N]
13.0	2091	0.9	71.48	H083	112MB6	18000
13.0	2089	2.5	73.71	H123	132SA6	30000
12.6	2156	2.4	73.71	H123	112MB6	30000
12.3	2217	3.8	79.07	H143	132S6	55000
12.2	2238	1.6	79.82	H103	132S6	22000
12.2	2203	2.3	118.62	H123	112MS4	30000
12.1	2240	3.7	79.07	H143	132SA6	55000
12.0	2261	1.6	79.82	H103	132SA6	22000
12.0	2244	1.6	120.84	H103	112MS4	22000
12.0	2174	1.2	242.59	H103	100L2	22000
12.0	2250	2.2	118.62	H123	100LB4	30000
11.8	2197	1.2	242.59	H103	100LA2	22000
11.8	2292	1.5	120.84	H103	100LB4	22000
11.7	2334	1.6	79.82	H103	112MB6	22000
11.6	2337	2.2	83.34	H123	132S6	30000
11.5	2360	1.6	84.16	H103	132S6	22000
11.5	2361	2.2	83.34	H123	132SA6	30000
11.4	2384	1.5	84.16	H103	132SA6	22000
11.3	2381	2.1	128.18	H123	112MS4	30000
11.2	2437	2.2	83.34	H123	112MB6	30000
11.2	2424	3.5	86.43	H143	132S6	55000
11.1	2461	1.5	84.16	H103	112MB6	22000
11.1	2431	2.1	128.18	H123	100LB4	30000
11.1	2449	3.4	86.43	H143	132SA6	55000
10.8	2490	1.4	134.06	H103	112MS4	22000
10.8	2523	2.1	89.97	H123	132S6	30000
10.7	2549	2.1	89.97	H123	132SA6	30000
10.6	2543	1.4	134.06	H103	100LB4	22000
10.4	2618	1.4	93.36	H103	132S6	22000
10.3	2645	1.4	93.36	H103	132SA6	22000
10.3	2631	2.0	89.97	H123	112MB6	30000
10.1	2664	1.3	143.42	H103	112MS4	22000
10.1	2698	3.1	96.21	H143	132S6	55000
10.0	2731	1.3	93.36	H103	112MB6	22000
10.0	2689	1.9	144.79	H123	112MS4	30000
10.0	2726	3.1	96.21	H143	132SA6	55000
9.9	2720	1.3	143.42	H103	100LB4	22000
9.8	2746	1.8	144.79	H123	100LB4	30000
9.7	2806	1.3	100.07	H103	132S6	22000
9.7	2812	1.9	100.29	H123	132S6	30000
9.6	2835	1.3	100.07	H103	132SA6	22000
9.6	2841	1.8	100.29	H123	132SA6	30000
9.3	2927	1.3	100.07	H103	112MB6	22000
9.3	2933	1.8	100.29	H123	112MB6	30000
9.3	2883	1.7	155.22	H123	112MS4	30000

5.1 H/HA MOTORREDUCTORES (50Hz)

3.00 kW

n2 [rpm]	M2 [Nm]	fs	i	Reductor	Motor	Fr2 [N]
9.3	2931	2.9	104.51	H143	132S6	55000
9.2	2961	2.8	104.51	H143	132SA6	55000
9.1	2944	1.7	155.22	H123	100LB4	30000
9.0	2987	1.2	160.82	H103	112MS4	22000
9.0	3038	1.7	108.34	H123	132S6	30000
8.9	3070	1.7	108.34	H123	132SA6	30000
8.8	3050	1.1	160.82	H103	100LB4	22000
8.6	3169	1.7	108.34	H123	112MB6	30000
8.4	3209	1.6	172.80	H123	112MS4	30000
8.4	3251	2.6	115.92	H143	132S6	55000
8.3	3284	2.6	115.92	H143	132SA6	55000
8.2	3326	1.6	118.62	H123	132S6	30000
8.2	3277	1.5	172.80	H123	100LB4	30000
8.1	3361	1.6	118.62	H123	132SA6	30000
8.0	3363	1.0	181.07	H103	112MS4	22000
7.8	3434	1.0	181.07	H103	100LB4	22000
7.8	3469	1.5	118.62	H123	112MB6	30000
7.7	3514	1.4	189.19	H123	112MS4	30000
7.6	3594	1.5	128.18	H123	132S6	30000
7.6	3602	2.3	128.47	H143	132S6	55000
7.5	3607	1.0	194.21	H103	112MS4	22000
7.5	3632	1.4	128.18	H123	132SA6	30000
7.5	3588	1.4	189.19	H123	100LB4	30000
7.5	3640	2.3	128.47	H143	132SA6	55000
7.3	3683	1.0	194.21	H103	100LB4	22000
7.3	3749	1.4	128.18	H123	112MB6	30000
7.0	3853	1.3	207.43	H123	112MS4	30000
7.0	3913	2.1	139.55	H143	132S6	55000
6.9	3954	2.1	139.55	H143	132SA6	55000
6.8	4022	0.9	143.42	H103	132S6	22000
6.8	3934	1.3	207.43	H123	100LB4	30000
6.7	4063	0.9	143.42	H103	132SA6	22000
6.7	4060	1.3	144.79	H123	132S6	30000
6.6	4102	1.3	144.79	H123	132SA6	30000
6.4	4235	1.2	144.79	H123	112MB6	30000
6.3	4289	1.2	230.92	H123	112MS4	30000
6.3	4328	1.9	154.33	H143	132S6	55000
6.2	4353	1.2	155.22	H123	132S6	30000
6.2	4398	1.2	155.22	H123	132SA6	30000
6.2	4373	1.9	154.33	H143	132SA6	55000
6.1	4380	1.1	230.92	H123	100LB4	30000
6.0	4540	1.2	155.22	H123	112MB6	30000
5.6	4822	1.0	259.64	H123	112MS4	30000
5.5	4924	1.0	259.64	H123	100LB4	30000
5.2	5214	1.6	185.96	H143	132S6	55000

5.1 H/HA MOTORREDUCTORES (50Hz)

3.00 kW

n2 [rpm]	M2 [Nm]	fs	i	Reductor	Motor	Fr2 [N]
5.2	5269	1.6	185.96	H143	132SA6	55000
4.7	5817	0.9	207.43	H123	132S6	30000
4.7	5779	1.5	206.08	H143	132S6	55000
4.7	5839	1.4	206.08	H143	132SA6	55000

4.00 kW

n2 [rpm]	M2 [Nm]	fs	i	Reductor	Motor	Fr2 [N]
2302.1	16	1.9	1.27	H051	112M2	1238
2278.6	16	1.9	1.27	H051	112MA2	1242
2255.0	16	1.9	1.27	H051	100LB2	1245
2180.5	16	3.7	1.34	H061	112M2	2000
2158.1	17	3.6	1.34	H061	112MA2	2006
2135.8	17	3.6	1.34	H061	100LB2	2012
2064.3	17	2.6	1.42	H051	112M2	1278
2043.2	18	2.6	1.42	H051	112MA2	1282
2022.0	18	2.5	1.42	H051	100LB2	1286
1378.8	26	1.7	2.13	H051	112M2	1433
1378.8	26	3.5	2.13	H061	112M2	2288
1364.7	26	1.7	2.13	H051	112MA2	1437
1364.7	26	3.4	2.13	H061	112MA2	2294
1350.6	26	1.7	2.13	H051	100LB2	1442
1350.6	26	3.4	2.13	H061	100LB2	2301
1172.0	31	2.2	2.50	HA61	112M2	1979
1160.0	31	2.2	2.50	HA61	112MA2	1986
1148.0	31	2.2	2.50	HA61	100LB2	1993
1139.4	31	1.7	2.57	H051	112M2	1510
1139.4	31	2.9	2.57	H061	112M2	2415
1139.3	33	1.2	1.27	H051	112M4	1505
1131.4	33	1.2	1.27	H051	112MA4	1508
1127.8	32	1.7	2.57	H051	112MA2	1514
1127.8	32	2.8	2.57	H061	112MA2	2422
1116.1	32	1.6	2.57	H051	100LB2	1519
1116.1	32	2.8	2.57	H061	100LB2	2429
1087.5	34	2.6	1.33	HA61	112M4	2029
1080.0	34	2.6	1.33	HA61	112MA4	2034
1079.1	34	2.3	1.34	H061	112M4	2445
1071.6	35	2.3	1.34	H061	112MA4	2450
1021.6	36	1.7	1.42	H051	112M4	1549
1014.5	37	1.6	1.42	H051	112MA4	1552
925.3	39	1.6	3.17	H051	112M2	1596
925.3	39	2.5	3.17	H061	112M2	2558
915.8	39	1.5	3.17	H051	112MA2	1600
915.8	39	2.5	3.17	H061	112MA2	2565

5.1 H/HA MOTORREDUCTORES (50Hz)

4.00 kW

n2 [rpm]	M2 [Nm]	fs	i	Reductor	Motor	Fr2 [N]
906.3	39	1.5	3.17	H051	100LB2	1604
906.3	39	2.5	3.17	H061	100LB2	2573
794.6	45	1.5	3.69	H051	112M2	1659
794.6	45	2.5	3.69	H061	112M2	2665
786.4	45	1.5	3.69	H051	112MA2	1663
786.4	45	2.5	3.69	H061	112MA2	2672
778.3	46	1.5	3.69	H051	100LB2	1668
778.3	46	2.4	3.69	H061	100LB2	2680
732.5	49	2.3	4.00	H061	112M2	2723
725.0	49	2.3	4.00	H061	112MA2	2730
717.5	50	2.3	4.00	H061	100LB2	2738
682.4	54	1.1	2.13	H051	112M4	1714
682.4	54	2.2	2.13	H061	112M4	2763
677.6	55	1.1	2.13	H051	112MA4	1717
677.6	55	2.2	2.13	H061	112MA4	2768
668.2	54	1.5	4.38	HA61	112M2	2387
661.4	54	1.5	4.38	HA61	112MA2	2395
654.6	55	1.5	4.38	HA61	100LB2	2403
614.4	58	2.1	4.77	H061	112M2	2849
608.1	59	2.0	4.77	H061	112MA2	2856
601.8	59	2.0	4.77	H061	100LB2	2864
580.0	64	1.4	2.50	HA61	112M4	2502
576.0	64	1.4	2.50	HA61	112MA4	2508
569.7	62	2.9	5.14	HA52	112M2	2222
563.9	66	1.1	2.57	H051	112M4	1791
563.9	66	1.8	2.57	H061	112M4	2898
563.9	63	2.9	5.14	HA52	112MA2	2230
560.0	66	1.1	2.57	H051	112MA4	1794
560.0	66	1.8	2.57	H061	112MA4	2903
558.1	64	2.0	5.25	H061	112M2	2918
558.1	63	2.8	5.14	HA52	100LB2	2237
552.4	65	2.0	5.25	H061	112MA2	2926
546.7	65	1.9	5.25	H061	100LB2	2933
536.4	66	1.8	5.46	H042	112M2	3559
530.9	67	1.8	5.46	H042	112MA2	3567
529.0	68	3.7	5.54	H081	112M2	3700
525.4	67	1.8	5.46	H042	100LB2	3575
523.6	68	3.6	5.54	H081	112MA2	3711
518.2	69	3.6	5.54	H081	100LB2	3722
511.6	69	2.8	5.73	H052	112M2	4695
506.3	70	2.8	5.73	H052	112MA2	4708
503.6	71	1.8	5.82	H061	112M2	2992
502.3	75	3.2	1.93	H081	132MA6	3741
501.1	71	2.8	5.73	H052	100LB2	4721
498.4	72	1.8	5.82	H061	112MA2	2999

5.1 H/HA MOTORREDUCTORES (50Hz)

4.00 kW

n2 [rpm]	M2 [Nm]	fs	i	Reductor	Motor	Fr2 [N]
493.3	72	1.8	5.82	H061	100LB2	3007
481.6	74	3.4	6.08	H081	112M2	3798
476.7	75	3.4	6.08	H081	112MA2	3809
471.8	76	3.4	6.08	H081	100LB2	3820
470.9	75	2.4	6.22	HA52	112M2	2368
470.9	75	3.8	6.22	HA62	112M2	3495
466.1	76	2.4	6.22	HA52	112MA2	2376
466.1	76	3.8	6.22	HA62	112MA2	3507
461.3	77	2.3	6.22	HA52	100LB2	2384
461.3	77	3.7	6.22	HA62	100LB2	3519
457.9	81	1.0	3.17	H051	112M4	1873
457.9	81	1.6	3.17	H061	112M4	3044
454.7	81	1.0	3.17	H051	112MA4	1876
454.7	81	1.6	3.17	H061	112MA4	3049
446.2	83	3.7	3.25	H081	112M4	3867
443.1	84	3.7	3.25	H081	112MA4	3875
425.0	83	2.6	6.89	H052	112M2	4927
420.7	84	2.6	6.89	H052	112MA2	4940
416.3	85	2.6	6.89	H052	100LB2	4953
393.2	94	1.0	3.69	H051	112M4	1930
393.2	94	1.6	3.69	H061	112M4	3149
390.7	92	2.9	7.50	H081	112M2	4000
390.5	95	0.9	3.69	H051	112MA4	1932
390.5	95	1.6	3.69	H061	112MA4	3154
389.6	95	3.3	3.72	H081	112M4	4000
386.9	96	3.2	3.72	H081	112MA4	4000
386.7	92	2.8	7.50	H081	112MA2	4000
382.7	93	2.8	7.50	H081	100LB2	4000
378.9	93	1.9	7.73	HA52	112M2	2546
378.9	93	3.1	7.73	HA62	112M2	3757
377.7	99	3.0	2.54	H081	132MA6	4000
375.0	94	1.9	7.73	HA52	112MA2	2554
375.0	94	3.0	7.73	HA62	112MA2	3770
371.1	95	1.9	7.73	HA52	100LB2	2563
371.1	95	3.0	7.73	HA62	100LB2	3783
362.5	102	1.5	4.00	H061	112M4	3204
362.5	102	3.1	4.00	H081	112M4	4000
360.0	103	1.5	4.00	H061	112MA4	3208
360.0	103	3.1	4.00	H081	112MA4	4000
347.0	103	2.5	8.44	H081	112M2	4000
343.6	103	2.5	8.53	H052	112M2	5193
343.4	104	2.5	8.44	H081	112MA2	4000
340.1	104	2.5	8.53	H052	112MA2	5206
339.9	105	2.5	8.44	H081	100LB2	4000
336.6	105	2.4	8.53	H052	100LB2	5219

5.1 H/HA MOTORREDUCTORES (50Hz)

4.00 kW

n2 [rpm]	M2 [Nm]	fs	i	Reductor	Motor	Fr2 [N]
330.7	112	1.0	4.38	HA61	112M4	3017
328.4	113	1.0	4.38	HA61	112MA4	3024
312.2	113	4.0	9.39	H062	112M2	9451
310.7	119	2.7	4.67	H081	112M4	4000
309.0	115	3.9	9.39	H062	112MA2	9479
308.6	120	2.7	4.67	H081	112MA4	4000
306.4	115	2.4	9.56	H052	112M2	5337
305.8	116	3.9	9.39	H062	100LB2	9507
304.0	122	1.3	4.77	H061	112M4	3318
303.9	116	1.9	9.64	HA52	112M2	2740
303.9	116	3.0	9.64	HA62	112M2	4044
303.3	117	2.4	9.56	H052	112MA2	5349
301.9	123	1.3	4.77	H061	112MA4	3323
300.7	118	1.9	9.64	HA52	112MA2	2749
300.7	118	2.9	9.64	HA62	112MA2	4058
300.1	118	2.4	9.56	H052	100LB2	5362
297.6	119	1.9	9.64	HA52	100LB2	2759
297.6	119	2.9	9.64	HA62	100LB2	4072
295.4	127	2.6	3.25	H081	132MA6	4000
281.9	130	1.8	5.14	HA52	112M4	2809
281.9	130	2.9	5.14	HA62	112M4	4146
280.0	131	1.8	5.14	HA52	112MA4	2816
280.0	131	2.9	5.14	HA62	112MA4	4156
276.2	134	1.3	5.25	H061	112M4	3378
274.3	135	1.3	5.25	H061	112MA4	3382
269.8	136	3.7	5.38	H062	112M4	9819
267.9	137	3.7	5.38	H062	112MA4	9838
265.4	138	1.2	5.46	H042	112M4	4033
263.6	139	1.2	5.46	H042	112MA4	4037
261.8	142	2.3	5.54	H081	112M4	4000
260.0	143	2.3	5.54	H081	112MA4	4000
257.9	145	2.2	3.72	H081	132MA6	4000
254.6	139	2.1	11.51	H052	112M2	5565
253.2	145	1.8	5.73	H052	112M4	5538
251.9	140	2.1	11.51	H052	112MA2	5577
251.4	146	1.8	5.73	H052	112MA4	5546
251.1	141	1.5	11.67	HA52	112M2	2920
251.1	141	2.3	11.67	HA62	112M2	4309
250.7	141	3.5	11.69	H062	112M2	10049
249.3	142	2.1	11.51	H052	100LB2	5590
249.2	149	1.1	5.82	H061	112M4	3438
248.6	142	1.5	11.67	HA52	112MA2	2930
248.6	142	2.3	11.67	HA62	112MA2	4324
248.1	143	3.4	11.69	H062	112MA2	10077
247.5	150	1.1	5.82	H061	112MA4	3442

5.1 H/HA MOTORREDUCTORES (50Hz)

4.00 kW

n2 [rpm]	M2 [Nm]	fs	i	Reductor	Motor	Fr2 [N]
246.0	144	1.5	11.67	HA52	100LB2	2940
246.0	144	2.3	11.67	HA62	100LB2	4339
245.6	144	3.4	11.69	H062	100LB2	10106
244.3	150	3.7	5.93	H062	112M4	10089
242.6	151	3.6	5.93	H062	112MA4	10108
240.0	156	2.2	4.00	H081	132MA6	4000
238.4	155	2.2	6.08	H081	112M4	4000
236.7	157	2.2	6.08	H081	112MA4	4000
233.0	157	1.5	6.22	HA52	112M4	2993
233.0	157	2.4	6.22	HA62	112M4	4418
231.4	158	1.5	6.22	HA52	112MA4	3000
231.4	158	2.4	6.22	HA62	112MA4	4428
231.3	153	3.4	12.67	H062	112M2	10272
231.1	160	4.0	6.23	H101	112MA4	5000
228.9	155	3.4	12.67	H062	112MA2	10301
227.4	165	3.9	4.22	H101	132MA6	5000
226.6	156	3.4	12.67	H062	100LB2	10330
210.3	174	1.7	6.89	H052	112M4	5751
208.9	176	1.7	6.89	H052	112MA4	5759
205.8	172	1.9	14.24	H052	112M2	5817
205.7	182	1.8	4.67	H081	132MA6	4000
203.7	174	1.9	14.24	H052	112MA2	5829
202.1	175	1.8	14.50	HA62	112M2	4633
201.6	176	1.8	14.24	H052	100LB2	5841
200.0	177	1.8	14.50	HA62	112MA2	4649
198.6	178	2.9	14.75	H062	112M2	10701
197.9	179	1.8	14.50	HA62	100LB2	4665
197.7	187	0.9	7.33	H061	112M4	3558
196.9	190	3.4	4.88	H101	132MA6	5000
196.6	180	2.9	14.75	H062	112MA2	10730
196.4	189	0.9	7.33	H061	112MA4	3561
196.2	187	2.9	7.39	H062	112M4	10698
194.8	188	2.9	7.39	H062	112MA4	10717
194.6	182	2.9	14.75	H062	100LB2	10760
193.3	192	1.8	7.50	H081	112M4	4000
192.2	193	3.4	7.55	H101	112M4	5000
192.0	193	1.8	7.50	H081	112MA4	4000
190.8	194	3.3	7.55	H101	112MA4	5000
187.5	196	1.2	7.73	HA52	112M4	3218
187.5	196	1.9	7.73	HA62	112M4	4750
186.2	197	1.2	7.73	HA52	112MA4	3226
186.2	197	1.9	7.73	HA62	112MA4	4761
182.3	205	3.2	5.27	H101	132MA6	5000
179.9	197	3.1	16.29	H062	112M2	10983
178.6	207	2.5	5.38	H062	132MA6	10950

5.1 H/HA MOTORREDUCTORES (50Hz)

4.00 kW

n2 [rpm]	M2 [Nm]	fs	i	Reductor	Motor	Fr2 [N]
178.1	199	3.0	16.29	H062	112MA2	11012
178.1	208	3.5	5.39	H082	132MA6	13822
176.6	200	1.7	16.59	H052	112M2	5988
176.2	201	3.0	16.29	H062	100LB2	11042
174.8	202	1.7	16.59	H052	112MA2	5999
173.3	216	1.6	5.54	H081	132MA6	4000
173.2	204	1.8	16.91	HA62	112M2	4877
173.0	205	1.6	16.59	H052	100LB2	6010
172.6	215	3.0	8.40	H101	112M4	5000
171.7	216	1.6	8.44	H081	112M4	4000
171.5	206	1.8	16.91	HA62	112MA2	4894
171.4	216	3.0	8.40	H101	112MA4	5000
170.6	215	2.8	8.50	H062	112M4	11091
170.5	217	1.6	8.44	H081	112MA4	4000
170.0	216	1.6	8.53	H052	112M4	5978
169.7	209	1.8	16.91	HA62	100LB2	4911
169.4	216	2.8	8.50	H062	112MA4	11111
168.9	217	1.6	8.53	H052	112MA4	5985
165.8	213	2.9	17.67	H062	112M2	11216
164.2	216	2.9	17.67	H062	112MA2	11245
162.8	217	1.6	18.00	H052	112M2	6074
162.7	225	0.9	8.91	H042	112M4	4217
162.5	218	2.9	17.67	H062	100LB2	11275
161.8	229	2.5	5.93	H062	132MA6	11228
161.6	227	0.9	8.91	H042	112MA4	4218
161.5	229	3.2	5.95	H082	132MA6	14212
161.1	220	1.6	18.00	H052	112MA2	6084
159.4	222	1.6	18.00	H052	100LB2	6095
157.8	237	1.5	6.08	H081	132MA6	4000
154.5	237	2.5	9.39	H062	112M4	11371
154.1	243	2.8	6.23	H101	132MA6	5000
153.6	244	3.9	6.25	H121	132MA6	6000
153.4	239	2.5	9.39	H062	112MA4	11391
151.6	242	1.5	9.56	H052	112M4	6089
150.6	244	1.5	9.56	H052	112MA4	6095
150.4	244	1.2	9.64	HA52	112M4	3464
150.4	244	1.9	9.64	HA62	112M4	5113
149.3	246	1.2	9.64	HA52	112MA4	3472
149.3	246	1.9	9.64	HA62	112MA4	5125
144.5	245	2.6	20.28	H062	112M2	11612
143.2	247	1.4	20.46	HA62	112M2	5197
143.0	247	2.6	20.28	H062	112MA2	11642
141.7	250	1.4	20.46	HA62	112MA2	5215
141.5	250	2.5	20.28	H062	100LB2	11672
140.6	261	0.9	10.31	H042	112M4	4224

5.1 H/HA MOTORREDUCTORES (50Hz)

4.00 kW

n2 [rpm]	M2 [Nm]	fs	i	Reductor	Motor	Fr2 [N]
140.3	252	1.4	20.46	HA62	100LB2	5233
139.6	263	0.9	10.31	H042	112MA4	4223
129.9	285	2.0	7.39	H062	132MA6	11844
129.8	285	2.9	7.39	H082	132MA6	15095
128.0	292	1.3	7.50	H081	132MA6	4000
127.2	294	2.3	7.55	H101	132MA6	5000
126.0	291	1.3	11.51	H052	112M4	6246
125.9	281	2.3	23.27	H062	112M2	12000
125.1	293	1.3	11.51	H052	112MA4	6251
124.7	300	3.5	7.70	H121	132MA6	6000
124.6	284	2.2	23.27	H062	112MA2	12000
124.3	295	0.9	11.67	HA52	112M4	3691
124.3	295	1.5	11.67	HA62	112M4	5448
124.1	296	2.2	11.69	H062	112M4	11989
123.4	297	0.9	11.67	HA52	112MA4	3700
123.4	297	1.5	11.67	HA62	112MA4	5461
123.3	287	2.2	23.27	H062	100LB2	12000
123.2	298	2.2	11.69	H062	112MA4	12000
119.7	309	2.7	8.02	H082	132MA6	15430
114.5	320	2.2	12.67	H062	112M4	12000
114.3	327	2.1	8.40	H101	132MA6	5000
114.0	310	2.1	25.70	H062	112M2	12000
113.7	323	2.2	12.67	H062	112MA4	12000
113.7	329	1.1	8.44	H081	132MA6	4000
112.9	328	1.9	8.50	H062	132MA6	12000
112.9	314	2.0	25.70	H062	112MA2	12000
111.7	317	2.0	25.70	H062	100LB2	12000
110.2	321	3.7	26.60	H082	112M2	15844
109.0	325	3.7	26.60	H082	112MA2	15888
108.5	341	2.8	8.85	H082	132MA6	15840
107.9	328	3.7	26.60	H082	100LB2	15932
105.1	337	3.6	27.88	H082	112M2	16044
104.0	340	3.5	27.88	H082	112MA2	16088
102.9	344	3.5	27.88	H082	100LB2	16132
102.3	362	1.7	9.39	H062	132MA6	12000
101.8	360	1.2	14.24	H052	112M4	6380
101.1	363	1.2	14.24	H052	112MA4	6384
100.0	367	1.1	14.50	HA62	112M4	5858
99.9	354	1.7	29.33	H062	112M2	12000
99.3	369	1.1	14.50	HA62	112MA4	5871
98.9	358	1.7	29.33	H062	112MA2	12000
98.3	373	1.9	14.75	H062	112M4	12000
97.8	362	1.7	29.33	H062	100LB2	12000
97.6	376	1.9	14.75	H062	112MA4	12000
97.3	377	4.0	14.90	H082	112M4	16311

5.1 H/HA MOTORREDUCTORES (50Hz)

4.00 kW

n2 [rpm]	M2 [Nm]	fs	i	Reductor	Motor	Fr2 [N]
96.7	379	4.0	14.90	H082	112MA4	16340
94.0	376	3.2	31.15	H082	112M2	16519
93.1	380	3.2	31.15	H082	112MA2	16563
92.1	384	3.1	31.15	H082	100LB2	16608
91.6	386	1.6	32.00	H062	112M2	12000
90.6	390	1.6	32.00	H062	112MA2	12000
89.7	395	1.6	32.00	H062	100LB2	12000
89.0	412	1.9	16.29	H062	112M4	12000
88.4	415	1.9	16.29	H062	112MA4	12000
87.4	420	1.1	16.59	H052	112M4	6438
87.3	420	3.6	16.62	H082	112M4	16774
87.2	425	2.7	11.01	H082	132MA6	16758
86.8	423	1.1	16.59	H052	112MA4	6439
86.7	423	3.5	16.62	H082	112MA4	16804
85.7	428	1.2	16.91	HA62	112M4	6166
85.2	415	2.9	34.38	H082	112M2	16943
85.1	431	1.2	16.91	HA62	112MA4	6180
84.4	419	2.9	34.38	H082	112MA2	16988
83.5	424	2.8	34.38	H082	100LB2	17033
82.1	451	1.5	11.69	H062	132MA6	12000
82.1	447	1.9	17.67	H062	112M4	12000
81.5	450	1.8	17.67	H062	112MA4	12000
80.6	455	1.0	18.00	H052	112M4	6451
80.0	458	1.0	18.00	H052	112MA4	6452
78.3	469	3.2	18.53	H082	112M4	17237
77.7	472	3.2	18.53	H082	112MA4	17266
75.8	489	1.5	12.67	H062	132MA6	12000
75.7	467	2.6	38.70	H082	112M2	17456
74.9	472	2.5	38.70	H082	112MA2	17501
74.8	490	3.3	19.38	H082	112M4	17430
74.3	494	3.2	19.38	H082	112MA4	17459
74.2	477	2.5	38.70	H082	100LB2	17546
72.6	505	0.9	19.97	H052	112M4	6450
72.1	509	0.9	19.97	H052	112MA4	6449
71.5	513	1.7	20.28	H062	112M4	12000
71.1	521	2.8	13.50	H082	132MA6	17621
71.0	516	1.6	20.28	H062	112MA4	12000
70.9	517	0.9	20.46	HA62	112M4	6570
70.4	521	0.9	20.46	HA62	112MA4	6585
68.5	516	2.3	42.75	H082	112M2	17886
67.8	522	2.3	42.75	H082	112MA2	17931
67.8	541	3.0	21.39	H082	112M4	17847
67.3	545	2.9	21.39	H082	112MA4	17876
67.1	527	2.3	42.75	H082	100LB2	17976
65.1	569	1.3	14.75	H062	132MA6	12000

5.1 H/HA MOTORREDUCTORES (50Hz)

4.00 kW

n2 [rpm]	M2 [Nm]	fs	i	Reductor	Motor	Fr2 [N]
64.4	575	2.7	14.90	H082	132MA6	18000
63.6	577	2.8	22.80	H082	112M4	18000
63.2	581	2.8	22.80	H082	112MA4	18000
62.3	589	1.4	23.27	H062	112M4	12000
61.9	593	1.4	23.27	H062	112MA4	12000
60.9	581	2.1	48.13	H082	112M2	18000
60.2	587	2.0	48.13	H082	112MA2	18000
59.6	594	2.0	48.13	H082	100LB2	18000
58.9	628	1.3	16.29	H062	132MA6	12000
57.8	641	2.5	16.62	H082	132MA6	18000
56.9	622	4.0	51.52	H102	112M2	22000
56.4	650	1.3	25.70	H062	112M4	12000
56.3	629	3.9	51.52	H102	112MA2	22000
56.0	654	1.3	25.70	H062	112MA4	12000
55.7	635	3.9	51.52	H102	100LB2	22000
54.5	673	2.4	26.60	H082	112M4	18000
54.3	682	1.3	17.67	H062	132MA6	12000
54.1	677	2.4	26.60	H082	112MA4	18000
52.0	705	2.3	27.88	H082	112M4	18000
51.8	715	2.2	18.53	H082	132MA6	18000
51.8	668	1.8	56.53	H083	112M2	18000
51.6	710	2.3	27.88	H082	112MA4	18000
51.3	675	1.8	56.53	H083	112MA2	18000
50.8	682	1.8	56.53	H083	100LB2	18000
49.5	748	2.2	19.38	H082	132MA6	18000
49.4	742	1.1	29.33	H062	112M4	12000
49.1	747	1.1	29.33	H062	112MA4	12000
47.3	782	1.1	20.28	H062	132MA6	12000
46.5	788	2.0	31.15	H082	112M4	18000
46.2	793	2.0	31.15	H082	112MA4	18000
45.3	809	1.1	32.00	H062	112M4	12000
45.0	815	1.0	32.00	H062	112MA4	12000
44.9	825	2.0	21.39	H082	132MA6	18000
42.4	865	3.7	34.20	H102	112M4	22000
42.2	869	1.8	34.38	H082	112M4	18000
42.1	880	1.9	22.80	H082	132MA6	18000
42.1	871	3.7	34.20	H102	112MA4	22000
42.0	824	3.2	69.69	H103	112M2	22000
41.9	875	1.8	34.38	H082	112MA4	18000
41.6	833	3.2	69.69	H103	112MA2	22000
41.3	898	1.0	23.27	H062	132MA6	12000
41.2	841	3.1	69.69	H103	100LB2	22000
41.0	845	1.6	71.48	H083	112M2	18000
40.6	854	1.6	71.48	H083	112MA2	18000
40.2	863	1.6	71.48	H083	100LB2	18000

5.1 H/HA MOTORREDUCTORES (50Hz)

4.00 kW

n2 [rpm]	M2 [Nm]	fs	i	Reductor	Motor	Fr2 [N]
40.1	925	3.7	23.97	H102	132MA6	22000
37.7	973	2.9	38.45	H102	112M4	22000
37.5	979	1.6	38.70	H082	112M4	18000
37.4	991	0.9	25.70	H062	132MA6	12000
37.4	979	2.9	38.45	H102	112MA4	22000
37.2	986	1.6	38.70	H082	112MA4	18000
37.1	999	3.5	25.89	H102	132MA6	22000
36.7	944	2.8	79.82	H103	112M2	22000
36.3	954	2.8	79.82	H103	112MA2	22000
36.1	1026	1.6	26.60	H082	132MA6	18000
36.0	964	2.7	79.82	H103	100LB2	22000
35.1	1045	3.2	41.30	H102	112M4	22000
34.9	1052	3.1	41.30	H102	112MA4	22000
34.8	995	2.6	84.16	H103	112M2	22000
34.5	1006	2.6	84.16	H103	112MA2	22000
34.4	1076	1.6	27.88	H082	132MA6	18000
34.1	1016	2.6	84.16	H103	100LB2	22000
33.9	1081	1.5	42.75	H082	112M4	18000
33.7	1089	1.5	42.75	H082	112MA4	18000
33.4	1108	3.1	28.73	H102	132MA6	22000
31.6	1159	2.8	45.82	H102	112M4	22000
31.4	1167	2.8	45.82	H102	112MA4	22000
31.4	1104	2.4	93.36	H103	112M2	22000
31.2	1185	2.8	30.72	H102	132MA6	22000
31.1	1116	2.4	93.36	H103	112MA2	22000
30.8	1202	1.4	31.15	H082	132MA6	18000
30.7	1127	2.3	93.36	H103	100LB2	22000
30.1	1217	1.3	48.13	H082	112M4	18000
29.9	1226	1.3	48.13	H082	112MA4	18000
29.3	1183	2.2	100.07	H103	112M2	22000
29.0	1196	2.2	100.07	H103	112MA2	22000
28.7	1208	2.2	100.07	H103	100LB2	22000
28.1	1320	2.5	34.20	H102	132MA6	22000
28.1	1303	2.5	51.52	H102	112M4	22000
28.0	1312	2.5	51.52	H102	112MA4	22000
27.9	1326	1.3	34.38	H082	132MA6	18000
26.6	1394	3.8	36.13	H122	132MA6	30000
26.0	1334	1.0	112.78	H083	112M2	18000
25.7	1400	1.1	56.53	H083	112M4	18000
25.7	1348	1.0	112.78	H083	112MA2	18000
25.5	1410	1.1	56.53	H083	112MA4	18000
25.0	1484	2.0	38.45	H102	132MA6	22000
24.8	1493	1.1	38.70	H082	132MA6	18000
24.2	1429	1.8	120.84	H103	112M2	22000
24.0	1444	1.8	120.84	H103	112MA2	22000

5.1 H/HA MOTORREDUCTORES (50Hz)

4.00 kW

n2 [rpm]	M2 [Nm]	fs	i	Reductor	Motor	Fr2 [N]
23.8	1459	1.8	120.84	H103	100LB2	22000
23.2	1593	2.2	41.30	H102	132MA6	22000
22.5	1649	1.0	42.75	H082	132MA6	18000
21.9	1585	1.7	134.06	H103	112M2	22000
21.8	1701	3.1	44.10	H122	132MA6	30000
21.6	1602	1.6	134.06	H103	112MA2	22000
21.5	1667	3.0	67.32	H123	112M4	30000
21.4	1619	1.6	134.06	H103	100LB2	22000
21.4	1679	3.0	67.32	H123	112MA4	30000
21.0	1768	2.0	45.82	H102	132MA6	22000
21.0	1729	3.0	45.77	H123	132MA6	30000
20.8	1726	2.0	69.69	H103	112M4	22000
20.7	1738	2.0	69.69	H103	112MA4	22000
20.4	1696	1.5	143.42	H103	112M2	22000
20.3	1770	1.0	71.48	H083	112M4	18000
20.2	1714	1.5	143.42	H103	112MA2	22000
20.1	1782	1.0	71.48	H083	112MA4	18000
20.0	1732	1.5	143.42	H103	100LB2	22000
19.9	1857	0.9	48.13	H082	132MA6	18000
19.7	1825	2.7	73.71	H123	112M4	30000
19.5	1838	2.7	73.71	H123	112MA4	30000
18.6	1988	1.7	51.52	H102	132MA6	22000
18.4	1953	0.9	78.87	H083	112M4	18000
18.3	1967	0.9	78.87	H083	112MA4	18000
18.2	1977	1.8	79.82	H103	112M4	22000
18.0	1990	1.8	79.82	H103	112MA4	22000
17.4	2064	2.4	83.34	H123	112M4	30000
17.3	2096	1.8	55.47	H103	132MA6	22000
17.3	2078	2.4	83.34	H123	112MA4	30000
17.2	2084	1.7	84.16	H103	112M4	22000
17.2	2111	2.5	55.87	H123	132MA6	30000
17.1	2099	1.7	84.16	H103	112MA4	22000
16.2	2237	3.8	59.22	H143	132MA6	55000
16.1	2228	2.2	89.97	H123	112M4	30000
16.0	2244	2.2	89.97	H123	112MA4	30000
15.5	2312	1.5	93.36	H103	112M4	22000
15.4	2328	1.5	93.36	H103	112MA4	22000
15.2	2380	3.5	62.99	H143	132MA6	55000
14.5	2478	1.4	100.07	H103	112M4	22000
14.5	2483	2.0	100.29	H123	112M4	30000
14.4	2495	1.4	100.07	H103	112MA4	22000
14.4	2501	2.0	100.29	H123	112MA4	30000
14.3	2543	2.1	67.32	H123	132MA6	30000
13.8	2633	1.4	69.69	H103	132MA6	22000
13.6	2548	1.0	215.45	H103	112M2	22000

5.1 H/HA MOTORREDUCTORES (50Hz)

4.00 kW

n2 [rpm]	M2 [Nm]	fs	i	Reductor	Motor	Fr2 [N]
13.5	2574	1.0	215.45	H103	112MA2	22000
13.5	2696	3.1	71.35	H143	132MA6	55000
13.4	2683	1.9	108.34	H123	112M4	30000
13.3	2601	1.0	215.45	H103	100LB2	22000
13.3	2702	1.9	108.34	H123	112MA4	30000
13.0	2785	1.9	73.71	H123	132MA6	30000
12.2	2938	1.7	118.62	H123	112M4	30000
12.1	2958	1.7	118.62	H123	112MA4	30000
12.1	2987	2.8	79.07	H143	132MA6	55000
12.0	3015	1.2	79.82	H103	132MA6	22000
12.0	2993	1.2	120.84	H103	112M4	22000
11.9	3013	1.2	120.84	H103	112MA4	22000
11.5	3148	1.7	83.34	H123	132MA6	30000
11.4	3179	1.2	84.16	H103	132MA6	22000
11.3	3174	1.6	128.18	H123	112M4	30000
11.2	3196	1.6	128.18	H123	112MA4	30000
11.1	3265	2.6	86.43	H143	132MA6	55000
10.8	3320	1.1	134.06	H103	112M4	22000
10.7	3343	1.0	134.06	H103	112MA4	22000
10.7	3399	1.5	89.97	H123	132MA6	30000
10.3	3527	1.0	93.36	H103	132MA6	22000
10.1	3552	1.0	143.42	H103	112M4	22000
10.0	3576	1.0	143.42	H103	112MA4	22000
10.0	3585	1.4	144.79	H123	112M4	30000
10.0	3634	2.3	96.21	H143	132MA6	55000
9.9	3610	1.4	144.79	H123	112MA4	30000
9.6	3780	1.0	100.07	H103	132MA6	22000
9.6	3789	1.4	100.29	H123	132MA6	30000
9.3	3844	1.3	155.22	H123	112M4	30000
9.3	3871	1.3	155.22	H123	112MA4	30000
9.2	3948	2.1	104.51	H143	132MA6	55000
8.9	4093	1.3	108.34	H123	132MA6	30000
8.4	4279	1.2	172.80	H123	112M4	30000
8.3	4309	1.2	172.80	H123	112MA4	30000
8.3	4379	1.9	115.92	H143	132MA6	55000
8.1	4481	1.2	118.62	H123	132MA6	30000
7.7	4685	1.1	189.19	H123	112M4	30000
7.6	4718	1.1	189.19	H123	112MA4	30000
7.5	4842	1.1	128.18	H123	132MA6	30000
7.5	4853	1.7	128.47	H143	132MA6	55000
7.0	5137	1.0	207.43	H123	112M4	30000
6.9	5173	1.0	207.43	H123	112MA4	30000
6.9	5272	1.6	139.55	H143	132MA6	55000
6.6	5470	1.0	144.79	H123	132MA6	30000
6.2	5804	0.9	155.22	H123	132MA6	30000

5.1 H/HA MOTORREDUCTORES (50Hz)

4.00 kW

n2 [rpm]	M2 [Nm]	fs	i	Reductor	Motor	Fr2 [N]
6.2	5830	1.4	154.33	H143	132MA6	55000
5.2	7025	1.2	185.96	H143	132MA6	55000
4.7	7785	1.1	206.08	H143	132MA6	55000

4.80 kW

n2 [rpm]	M2 [Nm]	fs	i	Reductor	Motor	Fr2 [N]
1123.6	40	1.0	1.27	H051	112MB4	1482
1072.5	41	2.2	1.33	HA61	112MB4	2038
1064.2	42	1.9	1.34	H061	112MB4	2415
1007.5	44	1.4	1.42	H051	112MB4	1523
672.9	66	0.9	2.13	H051	112MB4	1672
672.9	66	1.8	2.13	H061	112MB4	2710
572.0	78	1.2	2.50	HA61	112MB4	2514
562.6	79	3.5	2.54	H081	112MB4	3574
556.1	80	1.5	2.57	H061	112MB4	2832
451.6	98	1.3	3.17	H061	112MB4	2960
440.0	101	3.1	3.25	H081	112MB4	3814
387.8	115	1.3	3.69	H061	112MB4	3050
384.2	116	2.7	3.72	H081	112MB4	3948
357.5	124	1.2	4.00	H061	112MB4	3095
357.5	124	2.6	4.00	H081	112MB4	4000
326.1	136	0.8	4.38	HA61	112MB4	3031
306.4	145	2.2	4.67	H081	112MB4	4000
299.8	148	1.1	4.77	H061	112MB4	3187
278.1	158	1.5	5.14	HA52	112MB4	2822
278.1	158	2.4	5.14	HA62	112MB4	4166
272.4	163	1.0	5.25	H061	112MB4	3232
271.5	164	3.8	5.27	H101	112MB4	5000
266.0	165	3.0	5.38	H062	112MB4	9696
261.8	168	1.0	5.46	H042	112MB4	3808
258.2	172	1.9	5.54	H081	112MB4	4000
249.7	176	1.5	5.73	H052	112MB4	5358
245.8	181	0.9	5.82	H061	112MB4	3275
240.9	183	3.0	5.93	H062	112MB4	9950
235.1	189	1.8	6.08	H081	112MB4	4000
229.8	191	1.3	6.22	HA52	112MB4	3007
229.8	191	2.0	6.22	HA62	112MB4	4439
229.5	194	3.3	6.23	H101	112MB4	5000
207.4	212	1.4	6.89	H052	112MB4	5530
193.5	227	2.4	7.39	H062	112MB4	10516
190.7	233	1.5	7.50	H081	112MB4	4000
189.5	235	2.8	7.55	H101	112MB4	5000
184.9	238	1.0	7.73	HA52	112MB4	3233

5.1 H/HA MOTORREDUCTORES (50Hz)

4.80 kW

n2 [rpm]	M2 [Nm]	fs	i	Reductor	Motor	Fr2 [N]
184.9	238	1.6	7.73	HA62	112MB4	4772
170.2	261	2.5	8.40	H101	112MB4	5000
169.3	263	1.3	8.44	H081	112MB4	4000
168.2	262	2.3	8.50	H062	112MB4	10876
167.7	262	1.3	8.53	H052	112MB4	5699
152.4	289	2.1	9.39	H062	112MB4	11130
149.5	294	1.3	9.56	H052	112MB4	5774
148.3	297	1.0	9.64	HA52	112MB4	3480
148.3	297	1.6	9.64	HA62	112MB4	5137
124.2	354	1.1	11.51	H052	112MB4	5862
122.6	359	1.2	11.67	HA62	112MB4	5473
122.4	360	1.8	11.69	H062	112MB4	11679
112.9	390	1.8	12.67	H062	112MB4	11874
105.9	415	3.4	13.50	H082	112MB4	15638
100.4	438	1.0	14.24	H052	112MB4	5899
98.6	446	0.9	14.50	HA62	112MB4	5885
96.9	454	1.5	14.75	H062	112MB4	12000
96.0	458	3.3	14.90	H082	112MB4	16020
87.8	501	1.6	16.29	H062	112MB4	12000
86.1	511	2.9	16.62	H082	112MB4	16444
84.6	520	1.0	16.91	HA62	112MB4	6194
80.9	544	1.5	17.67	H062	112MB4	12000
77.2	570	2.6	18.53	H082	112MB4	16861
73.8	597	2.7	19.38	H082	112MB4	17034
70.5	624	1.4	20.28	H062	112MB4	12000
66.9	658	2.4	21.39	H082	112MB4	17404
62.7	702	2.3	22.80	H082	112MB4	17640
61.4	716	1.2	23.27	H062	112MB4	12000
55.6	791	1.1	25.70	H062	112MB4	12000
53.8	819	2.0	26.60	H082	112MB4	18000
51.3	858	1.9	27.88	H082	112MB4	18000
49.8	884	3.7	28.73	H102	112MB4	22000
46.5	945	3.4	30.72	H102	112MB4	22000
45.9	959	1.7	31.15	H082	112MB4	18000
41.8	1052	3.0	34.20	H102	112MB4	22000
41.6	1058	1.5	34.38	H082	112MB4	18000
37.2	1183	2.4	38.45	H102	112MB4	22000
36.9	1191	1.3	38.70	H082	112MB4	18000
34.6	1271	2.6	41.30	H102	112MB4	22000
33.5	1316	1.2	42.75	H082	112MB4	18000
31.2	1410	2.3	45.82	H102	112MB4	22000
29.7	1481	1.1	48.13	H082	112MB4	18000
27.8	1585	2.1	51.52	H102	112MB4	22000
25.3	1703	0.9	56.53	H083	112MB4	18000
21.2	2029	2.5	67.32	H123	112MB4	30000

5.1 H/HA MOTORREDUCTORES (50Hz)

4.80 kW

n2 [rpm]	M2 [Nm]	fs	i	Reductor	Motor	Fr2 [N]
20.5	2100	1.7	69.69	H103	112MB4	22000
19.4	2221	2.3	73.71	H123	112MB4	30000
17.9	2405	1.5	79.82	H103	112MB4	22000
17.2	2511	2.0	83.34	H123	112MB4	30000
17.0	2536	1.4	84.16	H103	112MB4	22000
15.9	2711	1.8	89.97	H123	112MB4	30000
15.3	2813	1.2	93.36	H103	112MB4	22000
14.3	3015	1.2	100.07	H103	112MB4	22000
14.3	3022	1.7	100.29	H123	112MB4	30000
13.2	3265	1.5	108.34	H123	112MB4	30000
12.1	3574	1.4	118.62	H123	112MB4	30000
11.8	3641	1.0	120.84	H103	112MB4	22000
11.2	3862	1.3	128.18	H123	112MB4	30000
9.9	4363	1.1	144.79	H123	112MB4	30000
9.2	4677	1.1	155.22	H123	112MB4	30000
8.3	5207	1.0	172.80	H123	112MB4	30000

5.50 kW

n2 [rpm]	M2 [Nm]	fs	i	Reductor	Motor	Fr2 [N]
2286.4	22	1.4	1.27	H051	112MB2	1215
2182.5	23	3.0	1.33	HA61	112MB2	1609
2165.6	23	2.6	1.34	H061	112MB2	1969
2050.2	24	1.9	1.42	H051	112MB2	1252
1369.4	36	1.3	2.13	H051	112MB2	1394
1369.4	36	2.5	2.13	H061	112MB2	2237
1164.0	42	1.6	2.50	HA61	112MB2	1983
1131.7	43	1.2	2.57	H051	112MB2	1461
1131.7	43	2.1	2.57	H061	112MB2	2352
918.9	54	1.1	3.17	H051	112MB2	1535
918.9	54	1.8	3.17	H061	112MB2	2480
792.5	62	3.7	3.72	H081	132S2	3226
789.2	62	1.1	3.69	H051	112MB2	1588
789.2	62	1.8	3.69	H061	112MB2	2574
781.8	63	3.7	3.72	H081	112MB2	3239
781.8	63	3.7	3.72	H081	132SA2	3239
761.3	67	3.4	1.93	H081	132MS4	3253
750.9	68	3.4	1.93	H081	132S4	3265
740.0	70	3.0	1.30	H081	132MB6	3276
737.5	67	3.6	4.00	H081	132S2	3291
727.5	68	1.7	4.00	H061	112MB2	2623
727.5	68	3.6	4.00	H081	112MB2	3304
727.5	68	3.6	4.00	H081	132SA2	3304
672.0	77	3.0	1.43	H081	132MB6	3362

5.1 H/HA MOTORREDUCTORES (50Hz)

5.50 kW

n2 [rpm]	M2 [Nm]	fs	i	Reductor	Motor	Fr2 [N]
663.7	74	1.1	4.38	HA61	112MB2	2392
632.1	78	3.1	4.67	H081	132S2	3432
623.6	79	3.0	4.67	H081	112MB2	3445
623.6	79	3.0	4.67	H081	132SA2	3445
610.2	81	1.5	4.77	H061	112MB2	2729
578.4	88	3.2	2.54	H081	132MS4	3502
574.4	89	3.2	2.54	H081	132S4	3508
565.8	86	2.1	5.14	HA52	112MB2	2227
565.8	86	3.3	5.14	HA62	112MB2	3287
554.3	89	1.4	5.25	H061	112MB2	2786
532.7	91	1.3	5.46	H042	112MB2	3358
532.6	92	2.7	5.54	H081	132S2	3591
525.4	94	2.6	5.54	H081	112MB2	3604
525.4	94	2.6	5.54	H081	132SA2	3604
508.1	96	2.0	5.73	H052	112MB2	4529
500.2	98	1.3	5.82	H061	112MB2	2845
497.1	104	2.3	1.93	H081	132MB6	3637
484.9	101	2.5	6.08	H081	132S2	3679
478.4	103	2.5	6.08	H081	112MB2	3692
478.4	103	2.5	6.08	H081	132SA2	3692
467.7	104	1.7	6.22	HA52	112MB2	2373
467.7	104	2.7	6.22	HA62	112MB2	3503
452.3	113	2.8	3.25	H081	132MS4	3729
446.2	114	2.7	3.25	H081	132S4	3741
422.1	115	1.9	6.89	H052	112MB2	4725
399.2	122	3.4	7.39	H062	132S2	8614
396.8	124	1.0	7.33	H061	112MB2	2969
394.9	129	2.4	3.72	H081	132MS4	3854
393.7	124	3.3	7.39	H062	112MB2	8646
393.7	124	3.3	7.39	H062	132SA2	8646
393.3	125	2.1	7.50	H081	132S2	3876
391.0	126	3.9	7.55	H101	132S2	5000
389.6	131	2.4	3.72	H081	132S4	3867
388.0	127	2.1	7.50	H081	112MB2	3889
388.0	127	2.1	7.50	H081	132SA2	3889
385.7	127	3.8	7.55	H101	112MB2	5000
385.7	127	3.8	7.55	H101	132SA2	5000
377.7	136	2.2	2.54	H081	132MB6	3890
376.3	129	1.4	7.73	HA52	112MB2	2551
376.3	129	2.2	7.73	HA62	112MB2	3766
367.5	139	2.3	4.00	H081	132MS4	3920
362.5	141	2.3	4.00	H081	132S4	3933
351.2	140	3.5	8.40	H101	132S2	5000
349.3	141	1.9	8.44	H081	132S2	3988
347.1	140	3.2	8.50	H062	132S2	8948

5.1 H/HA MOTORREDUCTORES (50Hz)

5.50 kW

n2 [rpm]	M2 [Nm]	fs	i	Reductor	Motor	Fr2 [N]
346.4	142	3.4	8.40	H101	112MB2	5000
346.4	142	3.4	8.40	H101	132SA2	5000
344.6	143	1.8	8.44	H081	112MB2	4000
344.6	143	1.8	8.44	H081	132SA2	4000
342.4	142	3.2	8.50	H062	112MB2	8981
342.4	142	3.2	8.50	H062	132SA2	8981
341.3	143	1.8	8.53	H052	112MB2	4942
326.5	149	1.1	8.91	H042	112MB2	3601
315.0	162	2.0	4.67	H081	132MS4	4000
314.3	155	2.9	9.39	H062	132S2	9187
310.7	164	2.0	4.67	H081	132S4	4000
310.1	157	2.9	9.39	H062	112MB2	9220
310.1	157	2.9	9.39	H062	132SA2	9220
304.3	160	1.7	9.56	H052	112MB2	5054
301.8	161	1.4	9.64	HA52	112MB2	2746
301.8	161	2.1	9.64	HA62	112MB2	4053
301.5	169	3.7	4.88	H101	132MS4	5000
297.4	171	3.6	4.88	H101	132S4	5000
295.4	174	1.9	3.25	H081	132MB6	4000
293.3	175	3.6	3.27	H101	132MB6	5000
282.1	172	1.0	10.31	H042	112MB2	3645
279.1	183	3.4	5.27	H101	132MS4	5000
275.3	185	3.4	5.27	H101	132S4	5000
273.5	184	2.7	5.38	H062	132MS4	9489
272.8	185	3.8	5.39	H082	132MS4	11990
269.8	187	2.7	5.38	H062	132S4	9522
269.1	187	3.7	5.39	H082	132S4	12037
265.4	192	1.7	5.54	H081	132MS4	4000
261.8	195	1.7	5.54	H081	132S4	4000
259.5	198	3.2	3.70	H101	132MB6	5000
257.9	200	1.6	3.72	H081	132MB6	4000
252.8	192	1.5	11.51	H052	112MB2	5223
252.4	193	2.5	11.69	H062	132S2	9723
249.4	195	1.1	11.67	HA52	112MB2	2926
249.4	195	1.7	11.67	HA62	112MB2	4319
249.0	195	2.5	11.69	H062	112MB2	9757
249.0	195	2.5	11.69	H062	132SA2	9757
247.7	204	2.7	5.93	H062	132MS4	9728
247.2	204	3.4	5.95	H082	132MS4	12326
244.3	206	2.7	5.93	H062	132S4	9761
243.9	207	3.4	5.95	H082	132S4	12374
241.6	211	1.6	6.08	H081	132MS4	4000
240.0	214	1.6	4.00	H081	132MB6	4000
238.4	214	1.6	6.08	H081	132S4	4000
235.9	216	3.0	6.23	H101	132MS4	5000

5.1 H/HA MOTORREDUCTORES (50Hz)

5.50 kW

n2 [rpm]	M2 [Nm]	fs	i	Reductor	Motor	Fr2 [N]
232.9	209	2.5	12.67	H062	132S2	9921
232.7	219	2.9	6.23	H101	132S4	5000
229.7	212	2.5	12.67	H062	112MB2	9955
229.7	212	2.5	12.67	H062	132SA2	9955
227.4	226	2.8	4.22	H101	132MB6	5000
205.7	250	1.3	4.67	H081	132MB6	4000
204.4	238	1.4	14.24	H052	112MB2	5391
200.7	242	1.3	14.50	HA62	112MB2	4644
200.0	243	2.2	14.75	H062	132S2	10295
200.0	257	3.6	4.80	H121	132MB6	6000
198.9	254	2.2	7.39	H062	132MS4	10257
198.8	254	3.2	7.39	H082	132MS4	13088
197.3	247	2.1	14.75	H062	112MB2	10328
197.3	247	2.1	14.75	H062	132SA2	10328
196.9	261	2.5	4.88	H101	132MB6	5000
196.2	257	2.1	7.39	H062	132S4	10290
196.1	257	3.1	7.39	H082	132S4	13137
196.0	260	1.3	7.50	H081	132MS4	4000
194.8	262	2.5	7.55	H101	132MS4	5000
193.3	264	1.3	7.50	H081	132S4	4000
192.2	265	2.5	7.55	H101	132S4	5000
190.9	267	3.7	7.70	H121	132MS4	6000
188.3	271	3.7	7.70	H121	132S4	6000
184.1	280	3.3	5.21	H121	132MB6	6000
183.3	275	2.9	8.02	H082	132MS4	13378
182.3	282	2.3	5.27	H101	132MB6	5000
181.1	269	2.2	16.29	H062	132S2	10537
180.8	279	2.9	8.02	H082	132S4	13427
178.7	272	2.2	16.29	H062	112MB2	10570
178.7	272	2.2	16.29	H062	132SA2	10570
178.6	285	1.8	5.38	H062	132MB6	10497
178.1	286	2.6	5.39	H082	132MB6	13466
175.4	277	1.2	16.59	H052	112MB2	5490
175.0	291	2.2	8.40	H101	132MS4	5000
174.1	293	1.2	8.44	H081	132MS4	4000
173.3	297	1.2	5.54	H081	132MB6	4000
172.9	292	2.1	8.50	H062	132MS4	10589
172.6	295	2.2	8.40	H101	132S4	5000
172.1	283	1.3	16.91	HA62	112MB2	4888
171.7	297	1.2	8.44	H081	132S4	4000
170.6	296	2.0	8.50	H062	132S4	10621
167.0	291	2.1	17.67	H062	132S2	10733
166.1	304	3.0	8.85	H082	132MS4	13730
164.7	295	2.1	17.67	H062	112MB2	10766
164.7	295	2.1	17.67	H062	132SA2	10766

5.1 H/HA MOTORREDUCTORES (50Hz)

5.50 kW

n2 [rpm]	M2 [Nm]	fs	i	Reductor	Motor	Fr2 [N]
163.8	308	2.9	8.85	H082	132S4	13780
161.8	315	1.8	5.93	H062	132MB6	10728
161.7	301	1.1	18.00	H052	112MB2	5532
161.5	315	2.3	5.95	H082	132MB6	13818
159.2	306	3.7	18.53	H082	132S2	13933
157.8	326	1.1	6.08	H081	132MB6	4000
157.1	310	3.6	18.53	H082	112MB2	13983
157.1	310	3.6	18.53	H082	132SA2	13983
156.6	322	1.9	9.39	H062	132MS4	10821
154.5	326	1.8	9.39	H062	132S4	10852
154.1	334	2.0	6.23	H101	132MB6	5000
153.6	335	2.8	6.25	H121	132MB6	6000
152.2	320	3.8	19.38	H082	132S2	14099
150.1	324	3.7	19.38	H082	112MB2	14149
150.1	324	3.7	19.38	H082	132SA2	14149
145.7	334	1.0	19.97	H052	112MB2	5575
145.5	335	1.9	20.28	H062	132S2	11061
143.5	339	1.9	20.28	H062	112MB2	11093
143.5	339	1.9	20.28	H062	132SA2	11093
142.2	342	1.0	20.46	HA62	112MB2	5209
137.9	353	3.4	21.39	H082	132S2	14462
136.1	358	3.4	21.39	H082	112MB2	14512
136.1	358	3.4	21.39	H082	132SA2	14512
133.6	378	2.9	11.01	H082	132MS4	14520
131.7	383	2.9	11.01	H082	132S4	14570
129.9	392	1.5	7.39	H062	132MB6	11221
129.8	392	2.1	7.39	H082	132MB6	14605
129.4	376	3.2	22.80	H082	132S2	14698
128.0	402	0.9	7.50	H081	132MB6	4000
127.6	381	3.1	22.80	H082	112MB2	14748
127.6	381	3.1	22.80	H082	132SA2	14748
127.2	404	1.7	7.55	H101	132MB6	5000
126.8	384	1.7	23.27	H062	132S2	11378
125.8	401	1.6	11.69	H062	132MS4	11314
125.0	389	1.6	23.27	H062	112MB2	11409
125.0	389	1.6	23.27	H062	132SA2	11409
124.7	413	2.5	7.70	H121	132MB6	6000
124.1	406	1.6	11.69	H062	132S4	11343
119.7	426	2.0	8.02	H082	132MB6	14899
116.1	434	1.6	12.67	H062	132MS4	11485
114.8	424	1.5	25.70	H062	132S2	11598
114.5	440	1.6	12.67	H062	132S4	11514
114.3	450	1.5	8.40	H101	132MB6	5000
113.2	430	1.5	25.70	H062	112MB2	11627
113.2	430	1.5	25.70	H062	132SA2	11627

5.1 H/HA MOTORREDUCTORES (50Hz)

5.50 kW

n2 [rpm]	M2 [Nm]	fs	i	Reductor	Motor	Fr2 [N]
112.9	451	1.4	8.50	H062	132MB6	11516
110.9	439	2.7	26.60	H082	132S2	15268
109.4	445	2.7	26.60	H082	112MB2	15318
109.4	445	2.7	26.60	H082	132SA2	15318
108.9	463	3.0	13.50	H082	132MS4	15261
108.5	470	2.0	8.85	H082	132MB6	15254
107.4	469	3.0	13.50	H082	132S4	15311
105.8	460	2.6	27.88	H082	132S2	15442
104.4	466	2.6	27.88	H082	112MB2	15492
104.4	466	2.6	27.88	H082	132SA2	15492
102.3	498	1.3	9.39	H062	132MB6	11712
99.7	506	1.4	14.75	H062	132MS4	11791
99.2	490	1.2	29.33	H062	112MB2	11904
98.7	511	2.9	14.90	H082	132MS4	15616
98.3	513	1.4	14.75	H062	132S4	11817
97.3	518	2.9	14.90	H082	132S4	15665
94.7	514	2.3	31.15	H082	132S2	15849
93.4	521	2.3	31.15	H082	112MB2	15899
93.4	521	2.3	31.15	H082	132SA2	15899
90.3	559	1.4	16.29	H062	132MS4	11974
89.0	566	1.4	16.29	H062	132S4	11998
88.5	570	2.6	16.62	H082	132MS4	16005
87.3	578	2.6	16.62	H082	132S4	16054
87.2	584	2.0	11.01	H082	132MB6	16029
85.8	567	2.1	34.38	H082	132S2	16207
84.7	575	2.1	34.38	H082	112MB2	16256
84.7	575	2.1	34.38	H082	132SA2	16256
83.2	606	1.4	17.67	H062	132MS4	12000
82.1	620	1.1	11.69	H062	132MB6	12000
82.1	614	1.4	17.67	H062	132S4	12000
79.4	635	2.4	18.53	H082	132MS4	16386
78.3	644	2.3	18.53	H082	132S4	16433
76.7	634	3.3	38.45	H102	132S2	22000
76.2	638	1.9	38.70	H082	132S2	16631
75.8	672	1.1	12.67	H062	132MB6	12000
75.8	665	2.4	19.38	H082	132MS4	16542
75.7	643	3.3	38.45	H102	112MB2	22000
75.7	643	3.3	38.45	H102	132SA2	22000
75.2	647	1.9	38.70	H082	112MB2	16679
75.2	647	1.9	38.70	H082	132SA2	16679
74.8	674	2.4	19.38	H082	132S4	16589
72.5	696	1.2	20.28	H062	132MS4	12000
71.5	705	1.2	20.28	H062	132S4	12000
71.4	681	3.6	41.30	H102	132S2	22000
71.1	716	2.1	13.50	H082	132MB6	16728

5.1 H/HA MOTORREDUCTORES (50Hz)

5.50 kW

n2 [rpm]	M2 [Nm]	fs	i	Reductor	Motor	Fr2 [N]
70.5	691	3.6	41.30	H102	112MB2	22000
70.5	691	3.6	41.30	H102	132SA2	22000
69.0	705	1.7	42.75	H082	132S2	16977
68.7	734	2.2	21.39	H082	132MS4	16874
68.1	715	1.7	42.75	H082	112MB2	17024
68.1	715	1.7	42.75	H082	132SA2	17024
67.8	744	2.2	21.39	H082	132S4	16919
65.1	782	0.9	14.75	H062	132MB6	12000
64.5	782	2.0	22.80	H082	132MS4	17084
64.4	790	2.0	14.90	H082	132MB6	17049
64.4	756	3.3	45.82	H102	132S2	22000
63.6	793	2.0	22.80	H082	132S4	17128
63.5	766	3.2	45.82	H102	112MB2	22000
63.5	766	3.2	45.82	H102	132SA2	22000
63.2	798	1.1	23.27	H062	132MS4	12000
62.3	809	1.1	23.27	H062	132S4	12000
61.3	794	1.5	48.13	H082	132S2	17378
60.5	805	1.5	48.13	H082	112MB2	17423
60.5	805	1.5	48.13	H082	132SA2	17423
60.5	834	4.0	23.97	H102	132S4	22000
59.7	854	3.9	16.09	H102	132MB6	22000
58.9	864	1.0	16.29	H062	132MB6	12000
57.8	881	1.8	16.62	H082	132MB6	17390
57.3	850	2.9	51.52	H102	132S2	22000
57.2	881	1.0	25.70	H062	132MS4	12000
56.8	888	3.7	25.89	H102	132MS4	22000
56.5	861	2.9	51.52	H102	112MB2	22000
56.5	861	2.9	51.52	H102	132SA2	22000
56.4	894	1.0	25.70	H062	132S4	12000
56.0	900	3.7	25.89	H102	132S4	22000
55.3	912	1.8	26.60	H082	132MS4	17566
54.5	925	1.7	26.60	H082	132S4	17607
54.3	937	0.9	17.67	H062	132MB6	12000
53.8	947	3.5	17.85	H102	132MB6	22000
53.2	896	2.9	55.47	H103	132S2	22000
52.7	956	1.7	27.88	H082	132MS4	17705
52.5	908	2.9	55.47	H103	132SA2	22000
52.0	970	1.7	27.88	H082	132S4	17744
51.8	983	1.6	18.53	H082	132MB6	17710
51.2	985	3.3	28.73	H102	132MS4	22000
50.5	999	3.3	28.73	H102	132S4	22000
49.5	1028	1.6	19.38	H082	132MB6	17836
48.4	1053	3.2	19.85	H102	132MB6	22000
47.9	1054	3.0	30.72	H102	132MS4	22000
47.2	1069	1.5	31.15	H082	132MS4	18000

5.1 H/HA MOTORREDUCTORES (50Hz)

5.50 kW

n2 [rpm]	M2 [Nm]	fs	i	Reductor	Motor	Fr2 [N]
47.2	1068	3.0	30.72	H102	132S4	22000
46.5	1083	1.5	31.15	H082	132S4	18000
44.9	1135	1.5	21.39	H082	132MB6	18000
44.8	1138	3.0	21.44	H102	132MB6	22000
43.0	1173	2.7	34.20	H102	132MS4	22000
42.8	1179	1.4	34.38	H082	132MS4	18000
42.4	1189	2.7	34.20	H102	132S4	22000
42.3	1126	2.3	69.69	H103	132S2	22000
42.2	1195	1.3	34.38	H082	132S4	18000
42.1	1210	1.4	22.80	H082	132MB6	18000
41.8	1141	2.3	69.69	H103	112MB2	22000
41.8	1141	2.3	69.69	H103	132SA2	22000
40.1	1272	2.7	23.97	H102	132MB6	22000
40.1	1256	4.0	36.13	H122	132S4	30000
38.2	1319	2.1	38.45	H102	132MS4	22000
38.0	1328	1.2	38.70	H082	132MS4	18000
37.7	1337	2.1	38.45	H102	132S4	22000
37.5	1346	1.2	38.70	H082	132S4	18000
37.1	1374	2.5	25.89	H102	132MB6	22000
37.0	1289	2.0	79.82	H103	132S2	22000
36.5	1307	2.0	79.82	H103	112MB2	22000
36.5	1307	2.0	79.82	H103	132SA2	22000
36.1	1411	1.2	26.60	H082	132MB6	18000
35.6	1417	2.3	41.30	H102	132MS4	22000
35.1	1436	2.3	41.30	H102	132S4	22000
35.1	1359	1.9	84.16	H103	132S2	22000
34.9	1458	3.6	27.49	H122	132MB6	30000
34.6	1378	1.9	84.16	H103	112MB2	22000
34.6	1378	1.9	84.16	H103	132SA2	22000
34.4	1479	1.1	27.88	H082	132MB6	18000
34.4	1466	1.1	42.75	H082	132MS4	18000
33.9	1487	1.1	42.75	H082	132S4	18000
33.4	1524	2.3	28.73	H102	132MB6	22000
33.3	1513	3.3	44.10	H122	132MS4	30000
32.9	1534	3.3	44.10	H122	132S4	30000
32.1	1572	2.1	45.82	H102	132MS4	22000
32.1	1584	3.3	29.86	H122	132MB6	30000
32.1	1537	3.3	45.77	H123	132MS4	30000
31.7	1559	3.2	45.77	H123	132S4	30000
31.6	1593	2.1	45.82	H102	132S4	22000
31.6	1508	1.7	93.36	H103	132S2	22000
31.2	1630	2.1	30.72	H102	132MB6	22000
31.2	1529	1.7	93.36	H103	112MB2	22000
31.2	1529	1.7	93.36	H103	132SA2	22000
30.8	1653	1.0	31.15	H082	132MB6	18000

5.1 H/HA MOTORREDUCTORES (50Hz)

5.50 kW

n2 [rpm]	M2 [Nm]	fs	i	Reductor	Motor	Fr2 [N]
30.5	1651	1.0	48.13	H082	132MS4	18000
30.1	1674	1.0	48.13	H082	132S4	18000
29.5	1616	1.6	100.07	H103	132S2	22000
29.1	1638	1.6	100.07	H103	112MB2	22000
29.1	1638	1.6	100.07	H103	132SA2	22000
29.1	1751	3.0	33.00	H122	132MB6	30000
28.5	1767	1.9	51.52	H102	132MS4	22000
28.1	1814	1.9	34.20	H102	132MB6	22000
28.1	1791	1.8	51.52	H102	132S4	22000
27.9	1824	0.9	34.38	H082	132MB6	18000
26.6	1917	2.7	36.13	H122	132MB6	30000
26.5	1863	1.9	55.47	H103	132MS4	22000
26.3	1876	2.7	55.87	H123	132MS4	30000
26.1	1889	1.9	55.47	H103	132S4	22000
26.0	1902	2.6	55.87	H123	132S4	30000
25.0	2040	1.4	38.45	H102	132MB6	22000
24.5	2016	4.0	59.22	H143	132S4	55000
23.3	2116	3.8	62.99	H143	132MS4	55000
23.2	2191	1.6	41.30	H102	132MB6	22000
23.0	2145	3.7	62.99	H143	132S4	55000
21.8	2340	2.2	44.10	H122	132MB6	30000
21.8	2261	2.2	67.32	H123	132MS4	30000
21.5	2292	2.2	67.32	H123	132S4	30000
21.1	2341	1.5	69.69	H103	132MS4	22000
21.0	2431	1.4	45.82	H102	132MB6	22000
21.0	2378	2.2	45.77	H123	132MB6	30000
20.8	2373	1.5	69.69	H103	132S4	22000
20.6	2397	3.3	71.35	H143	132MS4	55000
20.3	2430	3.3	71.35	H143	132S4	55000
19.9	2476	2.0	73.71	H123	132MS4	30000
19.7	2510	2.0	73.71	H123	132S4	30000
18.6	2733	1.3	51.52	H102	132MB6	22000
18.6	2656	3.0	79.07	H143	132MS4	55000
18.4	2681	1.3	79.82	H103	132MS4	22000
18.3	2606	1.0	160.82	H103	132SA2	22000
18.3	2597	1.0	160.82	H103	132S2	22000
18.3	2693	3.0	79.07	H143	132S4	55000
18.2	2718	1.3	79.82	H103	132S4	22000
17.9	2780	3.0	53.53	H143	132MB6	55000
17.6	2799	1.8	83.34	H123	132MS4	30000
17.5	2827	1.2	84.16	H103	132MS4	22000
17.4	2838	1.8	83.34	H123	132S4	30000
17.3	2882	1.3	55.47	H103	132MB6	22000
17.2	2866	1.2	84.16	H103	132S4	22000
17.2	2902	1.8	55.87	H123	132MB6	30000

5.1 H/HA MOTORREDUCTORES (50Hz)

5.50 kW

n2 [rpm]	M2 [Nm]	fs	i	Reductor	Motor	Fr2 [N]
17.0	2903	2.8	86.43	H143	132MS4	55000
16.8	2943	2.7	86.43	H143	132S4	55000
16.3	3022	1.7	89.97	H123	132MS4	30000
16.2	3076	2.7	59.22	H143	132MB6	55000
16.1	3064	1.6	89.97	H123	132S4	30000
15.7	3136	1.1	93.36	H103	132MS4	22000
15.5	3179	1.1	93.36	H103	132S4	22000
15.3	3231	2.5	96.21	H143	132MS4	55000
15.2	3272	2.6	62.99	H143	132MB6	55000
15.1	3276	2.4	96.21	H143	132S4	55000
14.7	3361	1.0	100.07	H103	132MS4	22000
14.7	3368	1.5	100.29	H123	132MS4	30000
14.5	3407	1.0	100.07	H103	132S4	22000
14.5	3415	1.5	100.29	H123	132S4	30000
14.3	3497	1.5	67.32	H123	132MB6	30000
14.1	3510	2.3	104.51	H143	132MS4	55000
13.9	3559	2.2	104.51	H143	132S4	55000
13.8	3620	1.0	69.69	H103	132MB6	22000
13.6	3639	1.4	108.34	H123	132MS4	30000
13.5	3706	2.3	71.35	H143	132MB6	55000
13.4	3689	1.4	108.34	H123	132S4	30000
13.0	3829	1.4	73.71	H123	132MB6	30000
12.7	3893	2.1	115.92	H143	132MS4	55000
12.5	3947	2.0	115.92	H143	132S4	55000
12.4	3984	1.3	118.62	H123	132MS4	30000
12.2	4039	1.2	118.62	H123	132S4	30000
12.1	4108	2.0	79.07	H143	132MB6	55000
11.5	4329	1.2	83.34	H123	132MB6	30000
11.5	4305	1.2	128.18	H123	132MS4	30000
11.4	4315	1.9	128.47	H143	132MS4	55000
11.3	4364	1.1	128.18	H123	132S4	30000
11.3	4374	1.8	128.47	H143	132S4	55000
11.1	4490	1.9	86.43	H143	132MB6	55000
10.7	4674	1.1	89.97	H123	132MB6	30000
10.5	4687	1.7	139.55	H143	132MS4	55000
10.4	4752	1.7	139.55	H143	132S4	55000
10.2	4863	1.0	144.79	H123	132MS4	30000
10.0	4930	1.0	144.79	H123	132S4	30000
10.0	4997	1.7	96.21	H143	132MB6	55000
9.6	5209	1.0	100.29	H123	132MB6	30000
9.5	5213	1.0	155.22	H123	132MS4	30000
9.5	5184	1.5	154.33	H143	132MS4	55000
9.4	5255	1.5	154.33	H143	132S4	55000
9.3	5285	0.9	155.22	H123	132S4	30000
9.2	5429	1.5	104.51	H143	132MB6	55000

5.1 H/HA MOTORREDUCTORES (50Hz)

5.50 kW

n2 [rpm]	M2 [Nm]	fs	i	Reductor	Motor	Fr2 [N]
8.9	5628	0.9	108.34	H123	132MB6	30000
8.3	6021	1.4	115.92	H143	132MB6	55000
7.9	6246	1.3	185.96	H143	132MS4	55000
7.8	6332	1.3	185.96	H143	132S4	55000
7.5	6673	1.3	128.47	H143	132MB6	55000
7.1	6922	1.2	206.08	H143	132MS4	55000
7.0	7017	1.1	206.08	H143	132S4	55000
6.9	7249	1.2	139.55	H143	132MB6	55000
6.2	8017	1.0	154.33	H143	132MB6	55000

7.50 kW

n2 [rpm]	M2 [Nm]	fs	i	Reductor	Motor	Fr2 [N]
1527.7	44	3.9	1.93	H081	132M2	2623
1517.3	44	3.9	1.93	H081	132SB2	2628
1160.7	58	3.6	2.54	H081	132M2	2832
1144.9	59	3.6	2.54	H081	132SB2	2843
1125.4	62	3.2	1.30	H081	132MA4	2848
1125.4	62	3.2	1.30	H081	132M4	2848
1022.0	68	3.2	1.43	H081	132MA4	2923
1022.0	68	3.2	1.43	H081	132M4	2923
907.7	74	3.1	3.25	H081	132M2	3026
895.4	75	3.1	3.25	H081	132SB2	3037
792.5	85	2.7	3.72	H081	132M2	3135
781.8	86	2.7	3.72	H081	132SB2	3146
756.1	92	2.5	1.93	H081	132M4	3160
750.9	93	2.5	1.93	H081	132MA4	3166
737.5	91	2.6	4.00	H081	132M2	3193
732.5	92	2.6	4.00	H081	132SB2	3199
632.1	106	2.3	4.67	H081	132M2	3318
623.6	108	2.2	4.67	H081	132SB2	3329
574.4	121	2.3	2.54	H081	132M4	3378
570.5	122	2.3	2.54	H081	132MA4	3383
560.1	120	3.9	5.27	H101	132M2	4502
556.3	121	3.9	5.27	H101	132SB2	4510
548.8	121	3.1	5.38	H062	132M2	7690
541.4	123	3.1	5.38	H062	132SB2	7718
532.6	126	2.0	5.54	H081	132M2	3456
525.4	128	1.9	5.54	H081	132SB2	3466
497.1	133	3.1	5.93	H062	132M2	7895
496.1	134	3.9	5.95	H082	132M2	9925
490.3	135	3.0	5.93	H062	132SB2	7924
489.4	136	3.9	5.95	H082	132SB2	9964
484.9	138	1.8	6.08	H081	132M2	3530

5.1 H/HA MOTORREDUCTORES (50Hz)

7.50 kW

n2 [rpm]	M2 [Nm]	fs	i	Reductor	Motor	Fr2 [N]
478.4	140	1.8	6.08	H081	132SB2	3541
477.3	147	3.2	2.03	H101	160M6	4693
473.5	142	3.4	6.23	H101	132M2	4720
467.0	144	3.3	6.23	H101	132SB2	4738
449.2	155	2.0	3.25	H081	132M4	3568
446.2	156	2.0	3.25	H081	132MA4	3574
446.1	156	3.9	3.27	H101	132M4	4785
443.1	157	3.8	3.27	H101	132MA4	4794
399.2	166	2.5	7.39	H062	132M2	8356
398.9	166	3.6	7.39	H082	132M2	10562
394.6	176	3.4	3.70	H101	132M4	4947
393.7	169	2.4	7.39	H062	132SB2	8384
393.5	169	3.6	7.39	H082	132SB2	10602
393.3	170	1.5	7.50	H081	132M2	3692
392.2	177	1.8	3.72	H081	132M4	3669
391.9	177	3.4	3.70	H101	132MA4	4956
391.0	171	2.8	7.55	H101	132M2	4975
390.9	180	3.2	2.48	H101	160M6	4955
389.6	178	1.7	3.72	H081	132MA4	3674
388.0	173	1.5	7.50	H081	132SB2	3703
385.7	174	2.8	7.55	H101	132SB2	4993
367.8	180	3.3	8.02	H082	132M2	10805
365.0	190	1.7	4.00	H081	132M4	3721
362.8	183	3.3	8.02	H082	132SB2	10846
362.5	192	1.7	4.00	H081	132MA4	3726
351.2	191	2.6	8.40	H101	132M2	5000
349.3	192	1.4	8.44	H081	132M2	3781
347.1	191	2.4	8.50	H062	132M2	8651
346.4	194	2.5	8.40	H101	132SB2	5000
345.8	201	3.0	4.22	H101	132M4	5000
344.6	195	1.3	8.44	H081	132SB2	3790
343.4	202	3.0	4.22	H101	132MA4	5000
342.4	194	2.3	8.50	H062	132SB2	8679
333.3	199	3.4	8.85	H082	132M2	11104
328.8	202	3.3	8.85	H082	132SB2	11145
328.3	214	3.9	2.95	H121	160M6	6000
314.3	211	2.1	9.39	H062	132M2	8859
312.9	222	1.4	4.67	H081	132M4	3827
310.7	224	1.4	4.67	H081	132MA4	3832
310.1	214	2.1	9.39	H062	132SB2	8888
308.6	227	3.8	3.14	H121	160M6	6000
304.2	228	3.8	4.80	H121	132M4	6000
302.1	230	3.8	4.80	H121	132MA4	6000
299.5	232	2.7	4.88	H101	132M4	5000
297.4	234	2.7	4.88	H101	132MA4	5000

5.1 H/HA MOTORREDUCTORES (50Hz)

7.50 kW

n2 [rpm]	M2 [Nm]	fs	i	Reductor	Motor	Fr2 [N]
296.4	237	2.7	3.27	H101	160M6	5000
280.0	248	3.5	5.21	H121	132M4	6000
278.1	250	3.5	5.21	H121	132MA4	6000
277.2	251	2.5	5.27	H101	132M4	5000
275.3	252	2.5	5.27	H101	132MA4	5000
271.6	253	2.0	5.38	H062	132M4	9112
271.0	259	3.4	3.58	H121	160M6	6000
270.9	254	2.8	5.39	H082	132M4	11704
269.8	255	2.0	5.38	H062	132MA4	9126
269.1	256	2.7	5.39	H082	132MA4	11725
268.0	248	3.3	11.01	H082	132M2	11778
264.4	251	3.3	11.01	H082	132SB2	11821
263.6	264	1.3	5.54	H081	132M4	3934
262.2	268	2.4	3.70	H101	160M6	5000
261.8	265	1.2	5.54	H081	132MA4	3938
252.4	263	1.9	11.69	H062	132M2	9315
249.0	266	1.8	11.69	H062	132SB2	9343
246.0	280	2.0	5.93	H062	132M4	9310
245.5	280	2.5	5.95	H082	132M4	12008
244.3	281	2.0	5.93	H062	132MA4	9324
243.9	282	2.5	5.95	H082	132MA4	12030
240.0	289	1.2	6.08	H081	132M4	3987
238.4	291	1.2	6.08	H081	132MA4	3991
235.6	298	3.0	4.12	H121	160M6	6000
234.3	297	2.2	6.23	H101	132M4	5000
233.6	297	3.0	6.25	H121	132M4	6000
232.9	285	1.8	12.67	H062	132M2	9479
232.7	299	2.1	6.23	H101	132MA4	5000
232.0	299	3.0	6.25	H121	132MA4	6000
229.7	289	1.8	12.67	H062	132SB2	9506
229.7	305	2.1	4.22	H101	160M6	5000
218.5	304	3.5	13.50	H082	132M2	12422
215.6	308	3.4	13.50	H082	132SB2	12465
202.1	347	2.6	4.80	H121	160M6	6000
200.0	332	1.6	14.75	H062	132M2	9779
199.0	353	1.8	4.88	H101	160M6	5000
198.0	335	3.4	14.90	H082	132M2	12734
197.5	348	1.6	7.39	H062	132M4	9732
197.4	348	2.3	7.39	H082	132M4	12688
197.3	336	1.6	14.75	H062	132SB2	9806
196.2	350	1.6	7.39	H062	132MA4	9745
196.1	351	2.3	7.39	H082	132MA4	12709
195.4	340	3.3	14.90	H082	132SB2	12777
194.7	357	1.0	7.50	H081	132M4	4000
193.5	359	1.8	7.55	H101	132M4	5000

5.1 H/HA MOTORREDUCTORES (50Hz)

7.50 kW

n2 [rpm]	M2 [Nm]	fs	i	Reductor	Motor	Fr2 [N]
193.3	359	1.0	7.50	H081	132MA4	4000
192.2	362	1.8	7.55	H101	132MA4	5000
189.6	366	2.7	7.70	H121	132M4	6000
188.3	369	2.7	7.70	H121	132MA4	6000
186.0	377	2.4	5.21	H121	160M6	6000
184.2	381	1.7	5.27	H101	160M6	5000
182.0	378	2.1	8.02	H082	132M4	12941
181.1	366	1.6	16.29	H062	132M2	9967
180.8	380	2.1	8.02	H082	132MA4	12963
180.0	386	1.9	5.39	H082	160M6	12958
178.7	371	1.6	16.29	H062	132SB2	9993
177.5	374	3.0	16.62	H082	132M2	13081
175.1	379	3.0	16.62	H082	132SB2	13124
173.8	400	1.6	8.40	H101	132M4	5000
172.6	402	1.6	8.40	H101	132MA4	5000
171.8	400	1.5	8.50	H062	132M4	9983
170.6	403	1.5	8.50	H062	132MA4	9995
167.0	397	1.6	17.67	H062	132M2	10116
165.0	417	2.2	8.85	H082	132M4	13247
164.7	403	1.5	17.67	H062	132SB2	10140
163.8	420	2.1	8.85	H082	132MA4	13268
163.1	426	1.7	5.95	H082	160M6	13262
159.2	417	2.7	18.53	H082	132M2	13425
157.1	422	2.7	18.53	H082	132SB2	13468
155.7	451	1.5	6.23	H101	160M6	5000
155.6	442	1.4	9.39	H062	132M4	10150
155.2	452	2.1	6.25	H121	160M6	6000
154.5	445	1.3	9.39	H062	132MA4	10161
152.2	436	2.8	19.38	H082	132M2	13568
150.1	442	2.7	19.38	H082	132SB2	13610
145.5	456	1.4	20.28	H062	132M2	10352
143.5	462	1.4	20.28	H062	132SB2	10375
137.9	481	2.5	21.39	H082	132M2	13875
136.1	488	2.5	21.39	H082	132SB2	13917
132.6	518	2.1	11.01	H082	132M4	13913
131.7	522	2.1	11.01	H082	132MA4	13933
131.2	529	1.6	7.39	H082	160M6	13922
129.4	513	2.3	22.80	H082	132M2	14072
128.6	546	1.3	7.55	H101	160M6	5000
127.6	520	2.3	22.80	H082	132SB2	14114
126.8	523	1.2	23.27	H062	132M2	10565
126.0	557	1.9	7.70	H121	160M6	6000
125.0	531	1.2	23.27	H062	132SB2	10584
124.9	550	1.2	11.69	H062	132M4	10473
124.1	554	1.2	11.69	H062	132MA4	10482

5.1 H/HA MOTORREDUCTORES (50Hz)

7.50 kW

n2 [rpm]	M2 [Nm]	fs	i	Reductor	Motor	Fr2 [N]
120.9	574	1.5	8.02	H082	160M6	14162
115.5	608	1.1	8.40	H101	160M6	5000
115.3	597	1.2	12.67	H062	132M4	10573
114.5	601	1.2	12.67	H062	132MA4	10581
110.9	598	2.0	26.60	H082	132M2	14538
109.6	634	1.5	8.85	H082	160M6	14444
109.4	607	2.0	26.60	H082	132SB2	14579
108.1	636	2.2	13.50	H082	132M4	14511
107.4	640	2.2	13.50	H082	132MA4	14530
105.8	627	1.9	27.88	H082	132M2	14677
104.4	636	1.9	27.88	H082	132SB2	14716
102.7	646	3.8	28.73	H102	132M2	21273
101.3	655	3.8	28.73	H102	132SB2	21346
99.0	695	1.0	14.75	H062	132M4	10725
98.3	699	1.0	14.75	H062	132MA4	10731
98.0	702	2.1	14.90	H082	132M4	14785
97.3	706	2.1	14.90	H082	132MA4	14804
96.0	691	3.5	30.72	H102	132M2	21634
94.7	701	1.7	31.15	H082	132M2	14994
94.7	700	3.4	30.72	H102	132SB2	21707
93.4	710	1.7	31.15	H082	132SB2	15033
89.6	767	1.0	16.29	H062	132M4	10794
89.0	772	1.0	16.29	H062	132MA4	10798
88.1	788	1.5	11.01	H082	160M6	15032
87.9	783	1.9	16.62	H082	132M4	15075
87.5	794	4.0	11.09	H102	160M6	22000
87.3	788	1.9	16.62	H082	132MA4	15093
86.3	769	3.1	34.20	H102	132M2	22000
85.8	773	1.6	34.38	H082	132M2	15264
85.1	780	3.1	34.20	H102	132SB2	22000
84.7	784	1.5	34.38	H082	132SB2	15300
82.6	832	1.0	17.67	H062	132M4	10831
82.1	838	1.0	17.67	H062	132MA4	10833
81.8	841	3.8	17.85	H102	132M4	22000
81.2	847	3.8	17.85	H102	132MA4	22000
78.8	872	1.7	18.53	H082	132M4	15346
78.3	878	1.7	18.53	H082	132MA4	15362
76.7	865	2.4	38.45	H102	132M2	22000
76.2	871	1.4	38.70	H082	132M2	15569
75.7	877	2.4	38.45	H102	132SB2	22000
75.3	913	1.8	19.38	H082	132M4	15452
75.2	883	1.4	38.70	H082	132SB2	15602
74.8	919	1.7	19.38	H082	132MA4	15468
73.6	935	3.4	19.85	H102	132M4	22000
73.1	941	3.4	19.85	H102	132MA4	22000

5.1 H/HA MOTORREDUCTORES (50Hz)

7.50 kW

n2 [rpm]	M2 [Nm]	fs	i	Reductor	Motor	Fr2 [N]
72.8	954	3.4	13.32	H102	160M6	22000
71.9	967	1.5	13.50	H082	160M6	15514
71.4	929	2.7	41.30	H102	132M2	22000
70.5	942	2.6	41.30	H102	132SB2	22000
69.0	962	1.2	42.75	H082	132M2	15805
68.3	1007	1.6	21.39	H082	132M4	15668
68.1	975	1.2	42.75	H082	132SB2	15835
68.1	1010	3.2	21.44	H102	132M4	22000
67.8	1014	1.6	21.39	H082	132MA4	15682
67.6	1017	3.1	21.44	H102	132MA4	22000
65.1	1066	1.5	14.90	H082	160M6	15715
64.4	1031	2.4	45.82	H102	132M2	22000
64.0	1074	1.5	22.80	H082	132M4	15796
63.6	1081	1.5	22.80	H082	132MA4	15809
63.5	1045	2.4	45.82	H102	132SB2	22000
61.3	1083	1.1	48.13	H082	132M2	16057
60.9	1129	2.9	23.97	H102	132M4	22000
60.5	1098	1.1	48.13	H082	132SB2	16084
60.5	1137	2.9	23.97	H102	132MA4	22000
60.3	1152	2.9	16.09	H102	160M6	22000
58.4	1190	1.3	16.62	H082	160M6	15908
57.3	1159	2.1	51.52	H102	132M2	22000
56.5	1175	2.1	51.52	H102	132SB2	22000
56.4	1220	2.7	25.89	H102	132M4	22000
56.0	1228	2.7	25.89	H102	132MA4	22000
54.9	1253	1.3	26.60	H082	132M4	16058
54.5	1261	1.3	26.60	H082	132MA4	16068
54.3	1278	2.6	17.85	H102	160M6	22000
53.2	1222	2.1	55.47	H103	132M2	22000
53.1	1295	3.9	27.49	H122	132M4	30000
52.7	1304	3.8	27.49	H122	132MA4	30000
52.5	1239	2.1	55.47	H103	132SB2	22000
52.4	1313	1.2	27.88	H082	132M4	16123
52.4	1326	1.2	18.53	H082	160M6	16063
52.0	1322	1.2	27.88	H082	132MA4	16132
50.8	1353	2.4	28.73	H102	132M4	22000
50.5	1362	2.4	28.73	H102	132MA4	22000
50.2	1383	3.8	19.32	H122	160M6	30000
50.0	1388	1.2	19.38	H082	160M6	16115
48.9	1421	2.4	19.85	H102	160M6	22000
48.9	1406	3.6	29.86	H122	132M4	30000
48.6	1416	3.5	29.86	H122	132MA4	30000
47.5	1447	2.2	30.72	H102	132M4	22000
47.2	1457	2.2	30.72	H102	132MA4	22000
47.2	1473	3.6	20.57	H122	160M6	30000

5.1 H/HA MOTORREDUCTORES (50Hz)

7.50 kW

n2 [rpm]	M2 [Nm]	fs	i	Reductor	Motor	Fr2 [N]
46.9	1467	1.1	31.15	H082	132M4	16244
46.5	1477	1.1	31.15	H082	132MA4	16249
45.4	1531	1.1	21.39	H082	160M6	16200
45.2	1535	2.2	21.44	H102	160M6	22000
44.2	1554	3.2	33.00	H122	132M4	30000
43.9	1565	3.2	33.00	H122	132MA4	30000
43.1	1613	3.3	22.52	H122	160M6	30000
42.7	1611	2.0	34.20	H102	132M4	22000
42.5	1632	1.0	22.80	H082	160M6	16233
42.5	1619	1.0	34.38	H082	132M4	16307
42.4	1622	2.0	34.20	H102	132MA4	22000
42.3	1535	1.7	69.69	H103	132M2	22000
42.2	1630	1.0	34.38	H082	132MA4	16310
41.8	1556	1.7	69.69	H103	132SB2	22000
40.5	1716	2.0	23.97	H102	160M6	22000
40.4	1702	2.9	36.13	H122	132M4	30000
40.1	1713	2.9	36.13	H122	132MA4	30000
39.6	1752	3.0	24.47	H122	160M6	30000
38.0	1811	1.5	38.45	H102	132M4	22000
37.7	1823	1.5	38.45	H102	132MA4	22000
37.5	1854	1.9	25.89	H102	160M6	22000
37.0	1758	1.5	79.82	H103	132M2	22000
36.5	1782	1.5	79.82	H103	132SB2	22000
35.4	1945	1.7	41.30	H102	132M4	22000
35.3	1968	2.7	27.49	H122	160M6	30000
35.1	1958	1.7	41.30	H102	132MA4	22000
35.1	1853	1.4	84.16	H103	132M2	22000
34.6	1879	1.4	84.16	H103	132SB2	22000
33.8	2057	1.7	28.73	H102	160M6	22000
33.1	2077	2.4	44.10	H122	132M4	30000
32.9	2091	2.4	44.10	H122	132MA4	30000
32.5	2138	2.5	29.86	H122	160M6	30000
31.9	2158	1.5	45.82	H102	132M4	22000
31.9	2111	2.4	45.77	H123	132M4	30000
31.7	2125	2.4	45.77	H123	132MA4	30000
31.6	2199	1.5	30.72	H102	160M6	22000
31.6	2173	1.5	45.82	H102	132MA4	22000
31.6	2056	1.3	93.36	H103	132M2	22000
31.2	2085	1.3	93.36	H103	132SB2	22000
30.1	2308	3.6	32.24	H142	160M6	55000
29.5	2204	1.2	100.07	H103	132M2	22000
29.4	2363	2.2	33.00	H122	160M6	30000
29.1	2234	1.2	100.07	H103	132SB2	22000
28.4	2449	1.4	34.20	H102	160M6	22000
28.3	2426	1.4	51.52	H102	132M4	22000

5.1 H/HA MOTORREDUCTORES (50Hz)

7.50 kW

n2 [rpm]	M2 [Nm]	fs	i	Reductor	Motor	Fr2 [N]
28.1	2443	1.4	51.52	H102	132MA4	22000
27.3	2468	3.2	53.53	H143	132M4	55000
27.1	2485	3.2	53.53	H143	132MA4	55000
26.8	2587	2.0	36.13	H122	160M6	30000
26.3	2558	1.4	55.47	H103	132M4	22000
26.1	2576	1.4	55.47	H103	132MA4	22000
26.1	2576	1.9	55.87	H123	132M4	30000
26.0	2594	1.9	55.87	H123	132MA4	30000
25.0	2781	3.0	38.85	H142	160M6	55000
24.7	2731	2.9	59.22	H143	132M4	55000
24.5	2750	2.9	59.22	H143	132MA4	55000
23.5	2957	1.2	41.30	H102	160M6	22000
23.2	2905	2.8	62.99	H143	132M4	55000
23.0	2925	2.7	62.99	H143	132MA4	55000
22.5	3083	2.7	43.05	H142	160M6	55000
22.0	3157	1.7	44.10	H122	160M6	30000
21.7	3105	1.6	67.32	H123	132M4	30000
21.5	3126	1.6	67.32	H123	132MA4	30000
21.2	3280	1.1	45.82	H102	160M6	22000
21.2	3209	1.6	45.77	H123	160M6	30000
21.0	3214	1.1	69.69	H103	132M4	22000
20.8	3236	1.1	69.69	H103	132MA4	22000
20.5	3290	2.4	71.35	H143	132M4	55000
20.3	3313	2.4	71.35	H143	132MA4	55000
20.1	3389	2.5	48.35	H143	160M6	55000
19.8	3399	1.5	73.71	H123	132M4	30000
19.7	3423	1.5	73.71	H123	132MA4	30000
18.5	3646	2.2	79.07	H143	132M4	55000
18.3	3681	1.0	79.82	H103	132M4	22000
18.3	3672	2.2	79.07	H143	132MA4	55000
18.2	3706	0.9	79.82	H103	132MA4	22000
18.1	3752	2.2	53.53	H143	160M6	55000
17.5	3889	0.9	55.47	H103	160M6	22000
17.5	3843	1.3	83.34	H123	132M4	30000
17.4	3917	1.3	55.87	H123	160M6	30000
17.4	3869	1.3	83.34	H123	132MA4	30000
17.3	3881	0.9	84.16	H103	132MA4	22000
17.3	3881	0.9	84.16	H103	132M4	22000
16.9	3986	2.0	86.43	H143	132M4	55000
16.8	4013	2.0	86.43	H143	132MA4	55000
16.4	4151	2.0	59.22	H143	160M6	55000
16.2	4149	1.2	89.97	H123	132M4	30000
16.1	4178	1.2	89.97	H123	132MA4	30000
15.4	4416	1.9	62.99	H143	160M6	55000
15.2	4437	1.8	96.21	H143	132M4	55000

5.1 H/HA MOTORREDUCTORES (50Hz)

7.50 kW

n2 [rpm]	M2 [Nm]	fs	i	Reductor	Motor	Fr2 [N]
15.1	4467	1.8	96.21	H143	132MA4	55000
14.6	4625	1.1	100.29	H123	132M4	30000
14.5	4657	1.1	100.29	H123	132MA4	30000
14.4	4720	1.1	67.32	H123	160M6	30000
14.0	4819	1.7	104.51	H143	132M4	55000
13.9	4853	1.6	104.51	H143	132MA4	55000
13.6	5002	1.7	71.35	H143	160M6	55000
13.5	4996	1.0	108.34	H123	132M4	30000
13.4	5031	1.0	108.34	H123	132MA4	30000
13.2	5167	1.0	73.71	H123	160M6	30000
12.6	5346	1.5	115.92	H143	132M4	55000
12.5	5382	1.5	115.92	H143	132MA4	55000
12.3	5470	0.9	118.62	H123	132M4	30000
12.3	5543	1.5	79.07	H143	160M6	55000
12.2	5508	0.9	118.62	H123	132MA4	30000
11.4	5924	1.4	128.47	H143	132M4	55000
11.3	5965	1.3	128.47	H143	132MA4	55000
11.2	6059	1.4	86.43	H143	160M6	55000
10.5	6435	1.2	139.55	H143	132M4	55000
10.4	6480	1.2	139.55	H143	132MA4	55000
10.1	6744	1.2	96.21	H143	160M6	55000
9.5	7117	1.1	154.33	H143	132M4	55000
9.4	7166	1.1	154.33	H143	132MA4	55000
9.3	7327	1.1	104.51	H143	160M6	55000
8.4	8126	1.0	115.92	H143	160M6	55000
7.9	8575	0.9	185.96	H143	132M4	55000
7.8	8634	0.9	185.96	H143	132MA4	55000
7.6	9006	0.9	128.47	H143	160M6	55000

9.20 kW

n2 [rpm]	M2 [Nm]	fs	i	Reductor	Motor	Fr2 [N]
1517.3	54	3.2	1.93	H081	132M2	2587
1507.0	55	3.2	1.93	H081	132MA2	2592
1152.8	71	2.9	2.54	H081	132M2	2784
1144.9	72	2.9	2.54	H081	132MA2	2789
1125.4	76	2.6	1.30	H081	132MB4	2791
1015.0	84	2.6	1.43	H081	132MB4	2865
901.5	91	2.5	3.25	H081	132M2	2964
895.4	92	2.5	3.25	H081	132MA2	2969
787.2	104	2.2	3.72	H081	132M2	3063
781.8	105	2.2	3.72	H081	132MA2	3068
756.1	113	2.0	1.93	H081	132MB4	3076
732.5	112	2.1	4.00	H081	132M2	3115

5.1 H/HA MOTORREDUCTORES (50Hz)

9.20 kW

n2 [rpm]	M2 [Nm]	fs	i	Reductor	Motor	Fr2 [N]
727.5	113	2.1	4.00	H081	132MA2	3120
718.4	119	3.8	2.03	H101	132MB4	4125
693.9	119	3.9	4.22	H101	132M2	4176
689.2	119	3.8	4.22	H101	132MA2	4185
627.9	131	1.8	4.67	H081	132M2	3225
623.6	132	1.8	4.67	H081	132MA2	3230
601.0	137	3.4	4.88	H101	132M2	4347
596.9	138	3.4	4.88	H101	132MA2	4356
584.3	146	3.8	2.48	H101	132MB4	4368
570.5	149	1.9	2.54	H081	132MB4	3272
556.3	148	3.1	5.27	H101	132M2	4441
552.5	149	3.1	5.27	H101	132MA2	4449
545.1	149	2.5	5.38	H062	132M2	7543
543.7	150	3.5	5.39	H082	132M2	9538
541.4	150	2.5	5.38	H062	132MA2	7556
540.0	151	3.5	5.39	H082	132MA2	9556
529.0	155	1.6	5.54	H081	132M2	3345
525.4	157	1.6	5.54	H081	132MA2	3349
493.7	165	2.5	5.93	H062	132M2	7732
492.8	165	3.2	5.95	H082	132M2	9805
490.3	166	2.5	5.93	H062	132MA2	7745
489.4	166	3.2	5.95	H082	132MA2	9823
481.6	171	1.5	6.08	H081	132M2	3408
478.4	172	1.5	6.08	H081	132MA2	3412
470.2	175	2.7	6.23	H101	132M2	4646
467.0	176	2.7	6.23	H101	132MA2	4655
446.2	191	1.6	3.25	H081	132MB4	3431
443.1	192	3.1	3.27	H101	132MB4	4703
396.4	205	2.0	7.39	H062	132M2	8149
396.2	205	2.9	7.39	H082	132M2	10408
393.7	207	2.0	7.39	H062	132MA2	8162
393.5	207	2.9	7.39	H082	132MA2	10428
391.9	217	2.8	3.70	H101	132MB4	4854
390.7	211	1.2	7.50	H081	132M2	3540
389.6	219	1.4	3.72	H081	132MB4	3511
388.3	212	2.3	7.55	H101	132M2	4884
388.0	212	1.2	7.50	H081	132MA2	3544
385.7	213	2.3	7.55	H101	132MA2	4893
365.3	223	2.7	8.02	H082	132M2	10637
362.8	224	2.7	8.02	H082	132MA2	10657
362.5	235	1.4	4.00	H081	132MB4	3551
352.1	242	3.5	4.12	H121	132MB4	6000
348.8	236	2.1	8.40	H101	132M2	5000
347.0	237	1.1	8.44	H081	132M2	3608
346.4	237	2.1	8.40	H101	132MA2	5000

5.1 H/HA MOTORREDUCTORES (50Hz)

9.20 kW

n2 [rpm]	M2 [Nm]	fs	i	Reductor	Motor	Fr2 [N]
344.7	236	1.9	8.50	H062	132M2	8411
344.6	239	1.1	8.44	H081	132MA2	3612
343.4	248	2.5	4.22	H101	132MB4	5000
342.4	238	1.9	8.50	H062	132MA2	8424
331.1	246	2.7	8.85	H082	132M2	10917
328.8	248	2.7	8.85	H082	132MA2	10936
312.2	261	1.7	9.39	H062	132M2	8593
310.7	274	1.2	4.67	H081	132MB4	3627
310.1	263	1.7	9.39	H062	132MA2	8605
302.1	282	3.1	4.80	H121	132MB4	6000
297.4	287	2.2	4.88	H101	132MB4	5000
278.1	306	2.9	5.21	H121	132MB4	6000
275.3	310	2.0	5.27	H101	132MB4	5000
269.8	313	1.6	5.38	H062	132MB4	8789
269.1	313	2.2	5.39	H082	132MB4	11460
266.2	306	2.7	11.01	H082	132M2	11541
264.4	308	2.7	11.01	H082	132MA2	11561
261.8	326	1.0	5.54	H081	132MB4	3695
250.7	325	1.5	11.69	H062	132M2	8979
249.0	327	1.5	11.69	H062	132MA2	8991
244.3	345	1.6	5.93	H062	132MB4	8952
243.9	346	2.0	5.95	H082	132MB4	11737
238.4	358	1.0	6.08	H081	132MB4	3723
232.7	366	1.7	6.23	H101	132MB4	5000
232.0	367	2.5	6.25	H121	132MB4	6000
231.3	352	1.5	12.67	H062	132M2	9113
229.7	354	1.5	12.67	H062	132MA2	9125
217.0	375	2.8	13.50	H082	132M2	12126
215.6	378	2.8	13.50	H082	132MA2	12146
198.6	410	1.3	14.75	H062	132M2	9351
197.3	413	1.3	14.75	H062	132MA2	9362
196.7	414	2.7	14.90	H082	132M2	12406
196.2	430	1.3	7.39	H062	132MB4	9282
196.1	430	1.9	7.39	H082	132MB4	12346
195.4	417	2.7	14.90	H082	132MA2	12425
192.2	443	1.5	7.55	H101	132MB4	5000
188.3	453	2.2	7.70	H121	132MB4	6000
180.8	467	1.7	8.02	H082	132MB4	12568
179.9	452	1.3	16.29	H062	132M2	9493
178.7	456	1.3	16.29	H062	132MA2	9502
176.3	462	2.4	16.62	H082	132M2	12712
175.1	465	2.4	16.62	H082	132MA2	12731
172.6	494	1.3	8.40	H101	132MB4	5000
170.6	494	1.2	8.50	H062	132MB4	9463
163.8	515	1.7	8.85	H082	132MB4	12833

5.1 H/HA MOTORREDUCTORES (50Hz)

9.20 kW

n2 [rpm]	M2 [Nm]	fs	i	Reductor	Motor	Fr2 [N]
158.2	515	2.2	18.53	H082	132M2	13011
157.1	518	2.2	18.53	H082	132MA2	13030
154.5	546	1.1	9.39	H062	132MB4	9573
151.2	538	2.2	19.38	H082	132M2	13134
150.1	542	2.2	19.38	H082	132MA2	13152
137.0	594	2.0	21.39	H082	132M2	13394
136.1	598	2.0	21.39	H082	132MA2	13412
131.7	640	1.7	11.01	H082	132MB4	13392
128.5	633	1.9	22.80	H082	132M2	13558
127.6	638	1.9	22.80	H082	132MA2	13575
124.1	680	1.0	11.69	H062	132MB4	9750
122.2	666	3.7	23.97	H102	132M2	19872
121.4	670	3.7	23.97	H102	132MA2	19905
114.5	737	1.0	12.67	H062	132MB4	9787
113.2	719	3.4	25.89	H102	132M2	20248
112.4	724	3.4	25.89	H102	132MA2	20281
110.2	739	1.6	26.60	H082	132M2	13934
109.4	744	1.6	26.60	H082	132MA2	13950
108.8	775	4.0	13.32	H102	132MB4	20334
107.4	785	1.8	13.50	H082	132MB4	13866
105.1	775	1.5	27.88	H082	132M2	14042
104.4	780	1.5	27.88	H082	132MA2	14057
102.0	798	3.1	28.73	H102	132M2	20750
101.3	804	3.1	28.73	H102	132MA2	20783
97.3	866	1.7	14.90	H082	132MB4	14071
95.4	853	2.8	30.72	H102	132M2	21073
94.7	859	2.8	30.72	H102	132MA2	21105
94.0	865	1.4	31.15	H082	132M2	14282
93.4	871	1.4	31.15	H082	132MA2	14296
90.1	936	3.4	16.09	H102	132MB4	21219
87.3	967	1.6	16.62	H082	132MB4	14276
85.7	950	2.5	34.20	H102	132M2	21582
85.2	955	1.3	34.38	H082	132M2	14475
85.1	957	2.5	34.20	H102	132MA2	21614
84.7	961	1.2	34.38	H082	132MA2	14487
81.2	1038	3.1	17.85	H102	132MB4	21694
78.3	1078	1.4	18.53	H082	132MB4	14451
76.2	1068	2.0	38.45	H102	132M2	22000
75.7	1075	1.1	38.70	H082	132M2	14677
75.7	1076	2.0	38.45	H102	132MA2	22000
75.2	1083	1.1	38.70	H082	132MA2	14687
74.8	1128	1.4	19.38	H082	132MB4	14515
73.1	1155	2.8	19.85	H102	132MB4	22000
70.9	1147	2.2	41.30	H102	132M2	22000
70.5	1155	2.1	41.30	H102	132MA2	22000

5.1 H/HA MOTORREDUCTORES (50Hz)

9.20 kW

n2 [rpm]	M2 [Nm]	fs	i	Reductor	Motor	Fr2 [N]
68.5	1188	1.0	42.75	H082	132M2	14816
68.1	1196	1.0	42.75	H082	132MA2	14825
67.8	1244	1.3	21.39	H082	132MB4	14631
67.6	1247	2.6	21.44	H102	132MB4	22000
64.4	1310	3.8	22.52	H122	132MB4	30000
63.9	1273	1.9	45.82	H102	132M2	22000
63.6	1326	1.2	22.80	H082	132MB4	14688
63.5	1282	1.9	45.82	H102	132MA2	22000
60.5	1394	2.4	23.97	H102	132MB4	22000
59.3	1423	3.5	24.47	H122	132MB4	30000
56.9	1431	1.7	51.52	H102	132M2	22000
56.5	1441	1.7	51.52	H102	132MA2	22000
56.0	1506	2.2	25.89	H102	132MB4	22000
54.5	1547	1.0	26.60	H082	132MB4	14760
52.8	1509	1.7	55.47	H103	132M2	22000
52.7	1599	3.1	27.49	H122	132MB4	30000
52.5	1519	1.7	55.47	H103	132MA2	22000
52.0	1622	1.0	27.88	H082	132MB4	14761
50.5	1671	2.0	28.73	H102	132MB4	22000
48.6	1737	2.9	29.86	H122	132MB4	30000
47.2	1787	1.8	30.72	H102	132MB4	22000
43.9	1920	2.6	33.00	H122	132MB4	30000
42.4	1989	1.6	34.20	H102	132MB4	22000
42.0	1896	1.4	69.69	H103	132M2	22000
41.8	1909	1.4	69.69	H103	132MA2	22000
40.1	2102	2.4	36.13	H122	132MB4	30000
37.7	2237	1.3	38.45	H102	132MB4	22000
36.7	2171	1.2	79.82	H103	132M2	22000
36.5	2186	1.2	79.82	H103	132MA2	22000
35.1	2402	1.4	41.30	H102	132MB4	22000
34.8	2289	1.1	84.16	H103	132M2	22000
34.6	2305	1.1	84.16	H103	132MA2	22000
32.9	2565	1.9	44.10	H122	132MB4	30000
31.7	2607	1.9	45.77	H123	132MB4	30000
31.6	2665	1.2	45.82	H102	132MB4	22000
31.4	2540	1.0	93.36	H103	132M2	22000
31.2	2557	1.0	93.36	H103	132MA2	22000
28.1	2997	1.1	51.52	H102	132MB4	22000
27.1	3049	2.6	53.53	H143	132MB4	55000
26.1	3160	1.1	55.47	H103	132MB4	22000
26.0	3182	1.6	55.87	H123	132MB4	30000
24.5	3373	2.4	59.22	H143	132MB4	55000
23.0	3588	2.2	62.99	H143	132MB4	55000
21.5	3835	1.3	67.32	H123	132MB4	30000
20.3	4064	2.0	71.35	H143	132MB4	55000

5.1 H/HA MOTORREDUCTORES (50Hz)

9.20 kW

n2 [rpm]	M2 [Nm]	fs	i	Reductor	Motor	Fr2 [N]
19.7	4198	1.2	73.71	H123	132MB4	30000
18.3	4504	1.8	79.07	H143	132MB4	55000
17.4	4747	1.1	83.34	H123	132MB4	30000
16.8	4923	1.6	86.43	H143	132MB4	55000
16.1	5124	1.0	89.97	H123	132MB4	30000
15.1	5480	1.5	96.21	H143	132MB4	55000
13.9	5953	1.3	104.51	H143	132MB4	55000
12.5	6603	1.2	115.92	H143	132MB4	55000
11.3	7317	1.1	128.47	H143	132MB4	55000
10.4	7949	1.0	139.55	H143	132MB4	55000
9.4	8790	0.9	154.33	H143	132MB4	55000

11.00 kW

n2 [rpm]	M2 [Nm]	fs	i	Reductor	Motor	Fr2 [N]
2243.1	44	3.4	1.30	H081	132MB2	2290
2037.0	48	3.4	1.43	H081	132MB2	2351
1507.0	65	2.6	1.93	H081	132MB2	2549
1144.9	86	2.4	2.54	H081	132MB2	2732
1110.0	92	2.2	1.30	H081	132MC4	2740
1008.0	101	2.2	1.43	H081	132MC4	2803
895.4	110	2.1	3.25	H081	132MB2	2896
786.5	125	3.6	3.70	H101	132MB2	3979
781.8	126	1.8	3.72	H081	132MB2	2984
750.4	137	3.1	1.29	H101	160L6	4015
745.7	137	1.7	1.93	H081	132MC4	2995
727.5	135	1.8	4.00	H081	132MB2	3030
725.8	140	3.2	2.03	H101	160MA4	4055
708.6	144	3.1	2.03	H101	132MC4	4081
708.6	144	3.1	2.03	H101	160S4	4081
689.2	143	3.2	4.22	H101	132MB2	4125
687.8	150	3.2	1.41	H101	160L6	4110
623.6	158	1.5	4.67	H081	132MB2	3126
596.9	165	2.8	4.88	H101	132MB2	4287
594.4	171	3.2	2.48	H101	160MA4	4276
580.3	176	3.1	2.48	H101	132MC4	4303
580.3	176	3.1	2.48	H101	160S4	4303
566.6	180	1.6	2.54	H081	132MC4	3157
552.5	178	2.6	5.27	H101	132MB2	4375
541.4	180	2.1	5.38	H062	132MB2	7385
540.0	180	2.9	5.39	H082	132MB2	9422
537.0	192	3.8	1.81	H121	160L6	5800
525.4	187	1.3	5.54	H081	132MB2	3226
499.2	204	3.9	2.95	H121	160MA4	5924

5.1 H/HA MOTORREDUCTORES (50Hz)

11.00 kW

n2 [rpm]	M2 [Nm]	fs	i	Reductor	Motor	Fr2 [N]
490.3	198	2.1	5.93	H062	132MB2	7556
489.4	199	2.6	5.95	H082	132MB2	9674
487.4	209	3.8	2.95	H121	132MC4	5963
487.4	209	3.8	2.95	H121	160S4	5963
485.0	212	3.7	2.00	H121	160L6	5967
478.4	206	1.2	6.08	H081	132MB2	3276
477.3	216	2.2	2.03	H101	160L6	4518
469.3	217	3.8	3.14	H121	160MA4	6000
467.0	211	2.3	6.23	H101	132MB2	4567
458.2	222	3.7	3.14	H121	132MC4	6000
458.2	222	3.7	3.14	H121	160S4	6000
450.7	226	2.7	3.27	H101	160MA4	4588
443.1	230	1.3	3.25	H081	132MC4	3283
440.0	232	2.6	3.27	H101	132MC4	4615
440.0	232	2.6	3.27	H101	160S4	4615
412.1	247	3.4	3.58	H121	160MA4	6000
402.4	253	3.4	3.58	H121	132MC4	6000
402.4	253	3.4	3.58	H121	160S4	6000
398.6	256	2.3	3.70	H101	160MA4	4726
393.5	247	2.4	7.39	H082	132MB2	10242
391.1	263	3.2	2.48	H121	160L6	6000
390.9	263	2.2	2.48	H101	160L6	4741
389.2	262	2.3	3.70	H101	132MC4	4753
389.2	262	2.3	3.70	H101	160S4	4753
386.9	263	1.2	3.72	H081	132MC4	3341
385.7	255	1.9	7.55	H101	132MB2	4787
362.8	268	2.2	8.02	H082	132MB2	10456
360.0	283	1.1	4.00	H081	132MC4	3367
358.2	284	3.0	4.12	H121	160MA4	6000
349.7	291	2.9	4.12	H121	132MC4	6000
349.7	291	2.9	4.12	H121	160S4	6000
349.3	292	2.1	4.22	H101	160MA4	4873
346.4	284	1.7	8.40	H101	132MB2	4909
342.4	284	1.6	8.50	H062	132MB2	8152
341.1	299	2.0	4.22	H101	132MC4	4900
341.1	299	2.0	4.22	H101	160S4	4900
328.8	296	2.3	8.85	H082	132MB2	10715
328.3	313	2.7	2.95	H121	160L6	6000
310.1	314	1.4	9.39	H062	132MB2	8306
308.6	330	1.0	4.67	H081	132MC4	3412
308.6	333	2.6	3.14	H121	160L6	6000
307.3	332	2.6	4.80	H121	160MA4	6000
302.6	337	1.8	4.88	H101	160MA4	5000
300.0	340	2.6	4.80	H121	132MC4	6000
300.0	340	2.6	4.80	H121	160S4	6000

5.1 H/HA MOTORREDUCTORES (50Hz)

11.00 kW

n2 [rpm]	M2 [Nm]	fs	i	Reductor	Motor	Fr2 [N]
296.4	347	1.8	3.27	H101	160L6	5000
295.4	345	1.8	4.88	H101	132MC4	5000
295.4	345	1.8	4.88	H101	160S4	5000
282.9	360	2.4	5.21	H121	160MA4	6000
280.1	364	1.7	5.27	H101	160MA4	5000
276.2	369	2.4	5.21	H121	132MC4	6000
276.2	369	2.4	5.21	H121	160S4	6000
273.7	368	1.9	5.39	H082	160MA4	11136
273.4	373	1.7	5.27	H101	132MC4	5000
273.4	373	1.7	5.27	H101	160S4	5000
271.0	380	2.4	3.58	H121	160L6	6000
267.9	376	1.3	5.38	H062	132MC4	8442
267.2	377	1.9	5.39	H082	132MC4	11197
267.2	377	1.9	5.39	H082	160S4	11197
264.4	368	2.2	11.01	H082	132MB2	11285
262.2	393	1.6	3.70	H101	160L6	5000
248.1	407	1.7	5.95	H082	160MA4	11385
242.6	416	1.3	5.93	H062	132MC4	8567
242.2	416	1.7	5.95	H082	132MC4	11445
242.2	416	1.7	5.95	H082	160S4	11445
236.7	430	1.5	6.23	H101	160MA4	5000
236.0	432	2.1	6.25	H121	160MA4	6000
235.6	437	2.0	4.12	H121	160L6	6000
231.1	441	1.5	6.23	H101	132MC4	5000
231.1	441	1.5	6.23	H101	160S4	5000
230.4	442	2.0	6.25	H121	132MC4	6000
230.4	442	2.0	6.25	H121	160S4	6000
229.7	448	1.4	4.22	H101	160L6	5000
215.6	451	2.3	13.50	H082	132MB2	11808
202.1	509	1.8	4.80	H121	160L6	6000
199.5	506	1.6	7.39	H082	160MA4	11920
199.0	517	1.3	4.88	H101	160L6	5000
195.5	521	1.2	7.55	H101	160MA4	5000
195.4	498	2.3	14.90	H082	132MB2	12052
194.8	518	1.1	7.39	H062	132MC4	8798
194.7	518	1.5	7.39	H082	132MC4	11977
194.7	518	1.5	7.39	H082	160S4	11977
191.6	532	1.9	7.70	H121	160MA4	6000
190.8	534	1.2	7.55	H101	132MC4	5000
190.8	534	1.2	7.55	H101	160S4	5000
187.0	545	1.8	7.70	H121	132MC4	6000
187.0	545	1.8	7.70	H121	160S4	6000
186.0	553	1.7	5.21	H121	160L6	6000
184.3	553	3.4	5.26	H102	160L6	17463
184.2	559	1.2	5.27	H101	160L6	5000

5.1 H/HA MOTORREDUCTORES (50Hz)

11.00 kW

n2 [rpm]	M2 [Nm]	fs	i	Reductor	Motor	Fr2 [N]
183.9	548	1.5	8.02	H082	160MA4	12111
180.0	566	1.3	5.39	H082	160L6	12135
179.5	562	1.4	8.02	H082	132MC4	12167
179.5	562	1.4	8.02	H082	160S4	12167
175.6	580	1.1	8.40	H101	160MA4	5000
175.1	556	2.0	16.62	H082	132MB2	12315
171.4	594	1.1	8.40	H101	132MC4	5000
171.4	594	1.1	8.40	H101	160S4	5000
169.4	595	1.0	8.50	H062	132MC4	8904
166.7	605	1.5	8.85	H082	160MA4	12334
163.1	624	1.2	5.95	H082	160L6	12353
162.7	620	1.5	8.85	H082	132MC4	12387
162.7	620	1.5	8.85	H082	160S4	12387
157.1	620	1.8	18.53	H082	132MB2	12566
155.7	661	1.0	6.23	H101	160L6	5000
155.2	663	1.4	6.25	H121	160L6	6000
153.4	657	0.9	9.39	H062	132MC4	8953
152.6	667	3.1	6.36	H102	160L6	18285
150.1	648	1.9	19.38	H082	132MB2	12667
146.6	664	3.6	19.85	H102	132MB2	18576
137.6	740	3.3	7.05	H102	160L6	18733
136.1	715	1.7	21.39	H082	132MB2	12876
135.7	717	3.3	21.44	H102	132MB2	18918
134.0	753	1.5	11.01	H082	160MA4	12787
133.1	758	4.0	11.09	H102	160MA4	18905
131.2	776	1.1	7.39	H082	160L6	12792
130.8	771	1.4	11.01	H082	132MC4	12832
130.8	771	1.4	11.01	H082	160S4	12832
129.9	776	3.9	11.09	H102	132MC4	19008
129.9	776	3.9	11.09	H102	160S4	19008
127.6	762	1.6	22.80	H082	132MB2	13005
126.0	817	1.3	7.70	H121	160L6	6000
121.4	802	3.1	23.97	H102	132MB2	19408
120.9	842	1.0	8.02	H082	160L6	12936
117.2	869	3.0	8.27	H102	160L6	19414
112.4	866	2.9	25.89	H102	132MB2	19744
110.7	911	3.4	13.32	H102	160MA4	19688
109.6	929	1.0	8.85	H082	160L6	13092
109.4	890	1.3	26.60	H082	132MB2	13284
109.3	923	1.5	13.50	H082	160MA4	13138
108.1	933	3.3	13.32	H102	132MC4	19788
108.1	933	3.3	13.32	H102	160S4	19788
106.7	945	1.5	13.50	H082	132MC4	13174
106.7	945	1.5	13.50	H082	160S4	13174
104.4	932	1.3	27.88	H082	132MB2	13360

5.1 H/HA MOTORREDUCTORES (50Hz)

11.00 kW

n2 [rpm]	M2 [Nm]	fs	i	Reductor	Motor	Fr2 [N]
101.3	961	2.6	28.73	H102	132MB2	20187
99.0	1018	1.5	14.90	H082	160MA4	13275
97.1	1049	2.8	9.99	H102	160L6	20189
96.7	1043	1.4	14.90	H082	132MC4	13304
96.7	1043	1.4	14.90	H082	160S4	13304
94.7	1027	2.3	30.72	H102	132MB2	20468
93.8	1086	3.9	10.35	H122	160L6	30000
93.4	1042	1.2	31.15	H082	132MB2	13516
91.7	1100	2.9	16.09	H102	160MA4	20457
89.5	1127	2.8	16.09	H102	132MC4	20552
89.5	1127	2.8	16.09	H102	160S4	20552
88.8	1136	1.3	16.62	H082	160MA4	13395
88.1	1156	1.0	11.01	H082	160L6	13350
87.5	1164	2.7	11.09	H102	160L6	20596
86.7	1164	1.3	16.62	H082	132MC4	13417
86.7	1164	1.3	16.62	H082	160S4	13417
85.1	1144	2.1	34.20	H102	132MB2	20905
84.7	1150	1.0	34.38	H082	132MB2	13627
82.6	1221	2.6	17.85	H102	160MA4	20859
80.7	1250	2.6	17.85	H102	132MC4	20950
80.7	1250	2.6	17.85	H102	160S4	20950
79.6	1267	1.2	18.53	H082	160MA4	13478
77.7	1297	1.2	18.53	H082	132MC4	13490
77.7	1297	1.2	18.53	H082	160S4	13490
76.6	1330	3.5	12.66	H122	160L6	30000
76.3	1321	3.8	19.32	H122	160MA4	30000
76.1	1325	1.2	19.38	H082	160MA4	13500
75.7	1286	1.6	38.45	H102	132MB2	21361
74.5	1353	3.7	19.32	H122	132MC4	30000
74.5	1353	3.7	19.32	H122	160S4	30000
74.3	1358	1.2	19.38	H082	132MC4	13508
74.3	1358	1.2	19.38	H082	160S4	13508
74.3	1357	2.4	19.85	H102	160MA4	21249
72.8	1399	2.3	13.32	H102	160L6	21270
72.6	1390	2.3	19.85	H102	132MC4	21334
72.6	1390	2.3	19.85	H102	160S4	21334
71.9	1418	1.0	13.50	H082	160L6	13451
71.7	1406	3.6	20.57	H122	160MA4	30000
70.5	1381	1.8	41.30	H102	132MB2	21626
70.0	1456	3.3	13.86	H122	160L6	30000
70.0	1441	3.5	20.57	H122	132MC4	30000
70.0	1441	3.5	20.57	H122	160S4	30000
69.0	1462	1.1	21.39	H082	160MA4	13518
68.8	1466	2.2	21.44	H102	160MA4	21518
67.3	1498	1.1	21.39	H082	132MC4	13517

5.1 H/HA MOTORREDUCTORES (50Hz)

11.00 kW

n2 [rpm]	M2 [Nm]	fs	i	Reductor	Motor	Fr2 [N]
67.3	1498	1.1	21.39	H082	160S4	13517
67.2	1502	2.1	21.44	H102	132MC4	21598
67.2	1502	2.1	21.44	H102	160S4	21598
65.5	1540	3.2	22.52	H122	160MA4	30000
65.1	1564	1.0	14.90	H082	160L6	13439
64.7	1559	1.0	22.80	H082	160MA4	13508
63.9	1577	3.2	22.52	H122	132MC4	30000
63.9	1577	3.2	22.52	H122	160S4	30000
63.5	1532	1.6	45.82	H102	132MB2	21989
63.2	1597	1.0	22.80	H082	132MC4	13499
63.2	1597	1.0	22.80	H082	160S4	13499
61.5	1639	2.0	23.97	H102	160MA4	21877
60.3	1690	2.0	16.09	H102	160L6	21876
60.3	1673	3.0	24.47	H122	160MA4	30000
60.1	1679	2.0	23.97	H102	132MC4	21949
60.1	1679	2.0	23.97	H102	160S4	21949
58.9	1714	2.9	24.47	H122	132MC4	30000
58.9	1714	2.9	24.47	H122	160S4	30000
58.4	1745	0.9	16.62	H082	160L6	13369
57.3	1777	2.8	16.92	H122	160L6	30000
57.0	1770	1.9	25.89	H102	160MA4	22000
56.5	1723	1.4	51.52	H102	132MB2	22000
55.6	1813	1.8	25.89	H102	132MC4	22000
55.6	1813	1.8	25.89	H102	160S4	22000
54.3	1874	1.8	17.85	H102	160L6	22000
53.7	1880	2.7	27.49	H122	160MA4	30000
52.5	1817	1.4	55.47	H103	132MB2	22000
52.4	1925	2.6	27.49	H122	132MC4	30000
52.4	1925	2.6	27.49	H122	160S4	30000
51.3	1964	1.7	28.73	H102	160MA4	22000
50.2	2029	2.6	19.32	H122	160L6	30000
50.1	2012	1.6	28.73	H102	132MC4	22000
50.1	2012	1.6	28.73	H102	160S4	22000
49.4	2042	2.4	29.86	H122	160MA4	30000
48.9	2084	1.6	19.85	H102	160L6	22000
48.4	2105	4.0	20.04	H142	160L6	51787
48.2	2091	2.4	29.86	H122	132MC4	30000
48.2	2091	2.4	29.86	H122	160S4	30000
48.0	2100	1.5	30.72	H102	160MA4	22000
47.2	2160	2.4	20.57	H122	160L6	30000
46.9	2151	1.5	30.72	H102	132MC4	22000
46.9	2151	1.5	30.72	H102	160S4	22000
45.7	2204	3.6	32.24	H142	160MA4	52578
45.2	2252	1.5	21.44	H102	160L6	22000
44.7	2256	2.2	33.00	H122	160MA4	30000

5.1 H/HA MOTORREDUCTORES (50Hz)

11.00 kW

n2 [rpm]	M2 [Nm]	fs	i	Reductor	Motor	Fr2 [N]
44.7	2258	3.5	32.24	H142	160S4	52888
43.6	2311	2.2	33.00	H122	132MC4	30000
43.6	2311	2.2	33.00	H122	160S4	30000
43.1	2338	1.4	34.20	H102	160MA4	22000
43.1	2365	2.2	22.52	H122	160L6	30000
42.1	2395	1.3	34.20	H102	132MC4	22000
42.1	2395	1.3	34.20	H102	160S4	22000
41.8	2282	1.2	69.69	H103	132MB2	22000
40.8	2470	2.0	36.13	H122	160MA4	30000
40.5	2517	1.4	23.97	H102	160L6	22000
40.2	2536	3.3	24.15	H142	160L6	54182
39.9	2530	2.0	36.13	H122	132MC4	30000
39.9	2530	2.0	36.13	H122	160S4	30000
39.6	2569	2.0	24.47	H122	160L6	30000
38.0	2656	3.0	38.85	H142	160MA4	54981
37.5	2719	1.3	25.89	H102	160L6	22000
37.4	2693	1.0	38.45	H102	132MC4	22000
37.1	2721	2.9	38.85	H142	160S4	55000
36.5	2614	1.0	79.82	H103	132MB2	22000
36.2	2810	3.0	26.76	H142	160L6	55000
35.7	2824	1.2	41.30	H102	160MA4	22000
35.3	2887	1.8	27.49	H122	160L6	30000
34.9	2892	1.1	41.30	H102	132MC4	22000
34.9	2892	1.1	41.30	H102	160S4	22000
34.3	2944	2.7	43.05	H142	160MA4	55000
33.8	3017	1.1	28.73	H102	160L6	22000
33.4	3015	1.7	44.10	H122	160MA4	30000
33.4	3015	2.7	43.05	H142	160S4	55000
32.7	3088	1.6	44.10	H122	132MC4	30000
32.7	3088	1.6	44.10	H122	160S4	30000
32.5	3136	1.7	29.86	H122	160L6	30000
32.2	3133	1.1	45.82	H102	160MA4	22000
32.2	3064	1.6	45.77	H123	160MA4	30000
31.6	3226	1.0	30.72	H102	160L6	22000
31.5	3139	1.6	45.77	H123	132MC4	30000
31.5	3139	1.6	45.77	H123	160S4	30000
31.4	3209	1.0	45.82	H102	132MC4	22000
31.4	3209	1.0	45.82	H102	160S4	22000
30.5	3237	2.5	48.35	H143	160MA4	55000
30.1	3386	2.5	32.24	H142	160L6	55000
29.8	3315	2.4	48.35	H143	160S4	55000
29.4	3465	1.5	33.00	H122	160L6	30000
28.4	3591	0.9	34.20	H102	160L6	22000
28.0	3608	0.9	51.52	H102	132MC4	22000
27.6	3583	2.2	53.53	H143	160MA4	55000

5.1 H/HA MOTORREDUCTORES (50Hz)

11.00 kW

n2 [rpm]	M2 [Nm]	fs	i	Reductor	Motor	Fr2 [N]
26.9	3671	2.2	53.53	H143	132MC4	55000
26.9	3671	2.2	53.53	H143	160S4	55000
26.8	3794	1.4	36.13	H122	160L6	30000
26.6	3714	0.9	55.47	H103	160MA4	22000
26.4	3740	1.3	55.87	H123	160MA4	30000
26.0	3804	0.9	55.47	H103	132MC4	22000
26.0	3804	0.9	55.47	H103	160S4	22000
25.8	3831	1.3	55.87	H123	132MC4	30000
25.8	3831	1.3	55.87	H123	160S4	30000
25.0	4080	2.1	38.85	H142	160L6	55000
24.9	3964	2.0	59.22	H143	160MA4	55000
24.3	4061	2.0	59.22	H143	132MC4	55000
24.3	4061	2.0	59.22	H143	160S4	55000
23.4	4217	1.9	62.99	H143	160MA4	55000
22.9	4320	1.9	62.99	H143	132MC4	55000
22.9	4320	1.9	62.99	H143	160S4	55000
22.5	4521	1.9	43.05	H142	160L6	55000
22.0	4631	1.1	44.10	H122	160L6	30000
21.9	4507	1.1	67.32	H123	160MA4	30000
21.4	4617	1.1	67.32	H123	132MC4	30000
21.4	4617	1.1	67.32	H123	160S4	30000
21.2	4706	1.1	45.77	H123	160L6	30000
20.7	4777	1.7	71.35	H143	160MA4	55000
20.2	4893	1.6	71.35	H143	132MC4	55000
20.2	4893	1.6	71.35	H143	160S4	55000
20.1	4971	1.7	48.35	H143	160L6	55000
20.0	4935	1.0	73.71	H123	160MA4	30000
19.5	5055	1.0	73.71	H123	132MC4	30000
19.5	5055	1.0	73.71	H123	160S4	30000
18.7	5294	1.5	79.07	H143	160MA4	55000
18.2	5422	1.5	79.07	H143	132MC4	55000
18.2	5422	1.5	79.07	H143	160S4	55000
18.1	5504	1.5	53.53	H143	160L6	55000
17.4	5744	0.9	55.87	H123	160L6	30000
17.1	5786	1.4	86.43	H143	160MA4	55000
16.7	5927	1.3	86.43	H143	132MC4	55000
16.7	5927	1.3	86.43	H143	160S4	55000
16.4	6089	1.4	59.22	H143	160L6	55000
15.4	6477	1.3	62.99	H143	160L6	55000
15.3	6441	1.2	96.21	H143	160MA4	55000
15.0	6597	1.2	96.21	H143	132MC4	55000
15.0	6597	1.2	96.21	H143	160S4	55000
14.1	6997	1.1	104.51	H143	160MA4	55000
13.8	7167	1.1	104.51	H143	132MC4	55000
13.8	7167	1.1	104.51	H143	160S4	55000

5.1 H/HA MOTORREDUCTORES (50Hz)

11.00 kW

n2 [rpm]	M2 [Nm]	fs	i	Reductor	Motor	Fr2 [N]
13.6	7336	1.1	71.35	H143	160L6	55000
12.7	7761	1.0	115.92	H143	160MA4	55000
12.4	7949	1.0	115.92	H143	132MC4	55000
12.4	7949	1.0	115.92	H143	160S4	55000
12.3	8130	1.0	79.07	H143	160L6	55000
11.5	8600	0.9	128.47	H143	160MA4	55000
11.2	8887	0.9	86.43	H143	160L6	55000
11.2	8809	0.9	128.47	H143	132MC4	55000
11.2	8809	0.9	128.47	H143	160S4	55000

15.00 kW

n2 [rpm]	M2 [Nm]	fs	i	Reductor	Motor	Fr2 [N]
1141.0	122	3.3	1.29	H101	160LA4	3490
1045.9	133	3.4	1.41	H101	160LA4	3573
796.3	176	3.9	1.23	H121	180L6	5075
758.1	185	2.3	1.29	H101	180L6	3878
737.5	188	4.0	2.00	H121	160LA4	5188
725.8	191	2.4	2.03	H101	160LA4	3925
694.9	202	2.3	1.41	H101	180L6	3962
691.8	203	3.6	1.42	H121	180L6	5275
594.8	234	3.4	2.48	H121	160LA4	5498
594.4	234	2.4	2.48	H101	160LA4	4117
542.5	259	2.8	1.81	H121	180L6	5626
499.2	278	2.9	2.95	H121	160LA4	5754
490.0	286	2.7	2.00	H121	180L6	5775
482.2	291	1.6	2.03	H101	180L6	4308
469.3	296	2.8	3.14	H121	160LA4	5845
450.7	308	1.9	3.27	H101	160LA4	4378
412.1	337	2.5	3.58	H121	160LA4	6000
398.6	349	1.7	3.70	H101	160LA4	4489
395.2	355	2.4	2.48	H121	180L6	6000
394.9	355	1.6	2.48	H101	180L6	4488
358.2	388	2.2	4.12	H121	160LA4	6000
349.3	398	1.5	4.22	H101	160LA4	4603
331.7	423	2.0	2.95	H121	180L6	6000
311.8	450	1.9	3.14	H121	180L6	6000
307.3	452	1.9	4.80	H121	160LA4	6000
302.6	459	1.4	4.88	H101	160LA4	4719
299.4	469	1.3	3.27	H101	180L6	4715
282.9	491	1.8	5.21	H121	160LA4	6000
280.3	491	3.7	5.26	H102	160LA4	15172
280.1	496	1.2	5.27	H101	160LA4	4777
273.8	513	1.7	3.58	H121	180L6	6000

5.1 H/HA MOTORREDUCTORES (50Hz)

15.00 kW

n2 [rpm]	M2 [Nm]	fs	i	Reductor	Motor	Fr2 [N]
273.7	502	1.4	5.39	H082	160LA4	10523
264.9	530	1.2	3.70	H101	180L6	4804
248.1	554	1.3	5.95	H082	160LA4	10709
238.0	590	1.5	4.12	H121	180L6	6000
236.7	587	1.1	6.23	H101	160LA4	4890
236.0	589	1.5	6.25	H121	160LA4	6000
232.1	605	1.1	4.22	H101	180L6	4887
232.1	593	3.4	6.36	H102	160LA4	15880
209.2	657	3.5	7.05	H102	160LA4	16266
204.2	687	1.3	4.80	H121	180L6	6000
201.0	698	0.9	4.88	H101	180L6	4961
199.5	689	1.2	7.39	H082	160LA4	11079
195.5	711	0.9	7.55	H101	160LA4	4991
191.6	725	1.4	7.70	H121	160LA4	6000
187.9	747	1.2	5.21	H121	180L6	6000
186.2	746	2.5	5.26	H102	180L6	16664
183.9	748	1.1	8.02	H082	160LA4	11199
178.3	771	3.2	8.27	H102	160LA4	16850
166.7	825	1.1	8.85	H082	160LA4	11328
156.8	895	1.1	6.25	H121	180L6	6000
154.2	901	2.3	6.36	H102	180L6	17329
147.6	932	3.0	9.99	H102	160LA4	17513
139.0	999	2.4	7.05	H102	180L6	17679
139.0	999	3.8	7.05	H122	180L6	27584
134.0	1026	1.1	11.01	H082	160LA4	11535
133.1	1034	2.9	11.09	H102	160LA4	17860
127.3	1103	1.0	7.70	H121	180L6	6000
126.6	1097	3.5	7.74	H122	180L6	28236
118.4	1173	2.2	8.27	H102	180L6	18185
116.5	1181	3.7	12.66	H122	160LA4	28851
115.6	1201	3.3	8.48	H122	180L6	28865
110.7	1242	2.5	13.32	H102	160LA4	18432
109.3	1259	1.1	13.50	H082	160LA4	11603
106.4	1293	3.6	13.86	H122	160LA4	29482
99.0	1389	1.1	14.90	H082	160LA4	11581
98.1	1416	2.1	9.99	H102	180L6	18716
94.7	1466	2.9	10.35	H122	180L6	30000
91.7	1500	2.1	16.09	H102	160LA4	18941
88.8	1549	1.0	16.62	H082	160LA4	11506
88.4	1571	2.0	11.09	H102	180L6	18968
87.2	1578	3.0	16.92	H122	160LA4	30000
82.6	1664	1.9	17.85	H102	160LA4	19177
77.4	1795	2.6	12.66	H122	180L6	30000
76.3	1801	2.8	19.32	H122	160LA4	30000
74.3	1851	1.7	19.85	H102	160LA4	19379

5.1 H/HA MOTORREDUCTORES (50Hz)

15.00 kW

n2 [rpm]	M2 [Nm]	fs	i	Reductor	Motor	Fr2 [N]
73.5	1889	1.7	13.32	H102	180L6	19325
71.7	1918	2.6	20.57	H122	160LA4	30000
70.7	1965	2.5	13.86	H122	180L6	30000
68.8	1999	1.6	21.44	H102	160LA4	19497
65.5	2100	2.4	22.52	H122	160LA4	30000
62.2	2232	3.7	15.75	H142	180L6	46783
61.5	2235	1.5	23.97	H102	160LA4	19617
61.1	2252	3.6	24.15	H142	160LA4	47054
60.9	2281	1.5	16.09	H102	180L6	19540
60.3	2281	2.2	24.47	H122	160LA4	30000
57.9	2398	2.1	16.92	H122	180L6	30000
57.0	2414	1.4	25.89	H102	160LA4	19662
56.1	2474	3.4	17.45	H142	180L6	47904
55.1	2495	3.2	26.76	H142	160LA4	48180
54.9	2530	1.3	17.85	H102	180L6	19576
53.7	2563	2.0	27.49	H122	160LA4	30000
51.3	2678	1.2	28.73	H102	160LA4	19665
50.7	2738	1.9	19.32	H122	180L6	30000
49.4	2813	1.2	19.85	H102	180L6	19542
49.4	2784	1.8	29.86	H122	160LA4	30000
48.9	2841	3.0	20.04	H142	180L6	49389
48.0	2864	1.1	30.72	H102	160LA4	19628
47.6	2916	1.8	20.57	H122	180L6	30000
45.7	3039	1.1	21.44	H102	180L6	19466
45.7	3006	2.7	32.24	H142	160LA4	50180
44.7	3077	1.6	33.00	H122	160LA4	30000
43.5	3192	1.6	22.52	H122	180L6	30000
43.1	3189	1.0	34.20	H102	160LA4	19497
40.9	3397	1.0	23.97	H102	180L6	19268
40.8	3369	1.5	36.13	H122	160LA4	30000
40.6	3423	2.5	24.15	H142	180L6	51320
40.1	3468	1.5	24.47	H122	180L6	30000
38.0	3622	2.2	38.85	H142	160LA4	52091
37.8	3670	0.9	25.89	H102	180L6	19064
36.6	3793	2.2	26.76	H142	180L6	52335
35.6	3896	1.3	27.49	H122	180L6	30000
34.3	4014	2.0	43.05	H142	160LA4	53089
33.4	4112	1.2	44.10	H122	160LA4	30000
32.8	4233	1.2	29.86	H122	180L6	30000
32.2	4179	1.2	45.77	H123	160LA4	30000
30.5	4414	1.8	48.35	H143	160LA4	54432
30.4	4570	1.8	32.24	H142	180L6	54049
29.7	4677	1.1	33.00	H122	180L6	30000
27.6	4887	1.6	53.53	H143	160LA4	55000
27.1	5121	1.0	36.13	H122	180L6	30000

5.1 H/HA MOTORREDUCTORES (50Hz)

15.00 kW

n2 [rpm]	M2 [Nm]	fs	i	Reductor	Motor	Fr2 [N]
26.4	5100	1.0	55.87	H123	160LA4	30000
25.2	5506	1.5	38.85	H142	180L6	55000
24.9	5406	1.5	59.22	H143	160LA4	55000
23.4	5751	1.4	62.99	H143	160LA4	55000
22.8	6102	1.4	43.05	H142	180L6	55000
20.7	6514	1.2	71.35	H143	160LA4	55000
20.3	6709	1.3	48.35	H143	180L6	55000
18.7	7219	1.1	79.07	H143	160LA4	55000
18.3	7428	1.1	53.53	H143	180L6	55000
17.1	7890	1.0	86.43	H143	160LA4	55000
16.5	8218	1.0	59.22	H143	180L6	55000
15.6	8742	1.0	62.99	H143	180L6	55000
15.3	8783	0.9	96.21	H143	160LA4	55000

18.50 kW

n2 [rpm]	M2 [Nm]	fs	i	Reductor	Motor	Fr2 [N]
1137.2	151	2.7	1.29	H101	180M4	3421
1042.4	164	2.7	1.41	H101	180M4	3497
813.8	211	3.3	1.81	H121	180M4	4958
796.3	217	3.1	1.23	H121	200LA6	4981
735.0	233	3.2	2.00	H121	180M4	5092
723.3	237	1.9	2.03	H101	180M4	3814
691.8	250	2.9	1.42	H121	200LA6	5166
592.7	289	2.8	2.48	H121	180M4	5378
592.4	289	1.9	2.48	H101	180M4	3981
542.5	319	2.3	1.81	H121	200LA6	5488
497.5	344	2.3	2.95	H121	180M4	5610
490.0	353	2.2	2.00	H121	200LA6	5623
467.7	366	2.2	3.14	H121	180M4	5692
449.2	382	1.6	3.27	H101	180M4	4197
410.7	417	2.0	3.58	H121	180M4	5862
397.3	431	1.4	3.70	H101	180M4	4284
395.2	438	1.9	2.48	H121	200LA6	5902
357.0	480	1.8	4.12	H121	180M4	6000
348.2	492	1.2	4.22	H101	180M4	4369
331.7	522	1.6	2.95	H121	200LA6	6000
311.8	555	1.6	3.14	H121	200LA6	6000
306.3	560	1.6	4.80	H121	180M4	6000
301.5	568	1.1	4.88	H101	180M4	4448
281.9	608	1.4	5.21	H121	180M4	6000
279.3	607	3.0	5.26	H102	180M4	14749
279.1	614	1.0	5.27	H101	180M4	4484
273.8	632	1.4	3.58	H121	200LA6	6000

5.1 H/HA MOTORREDUCTORES (50Hz)

18.50 kW

n2 [rpm]	M2 [Nm]	fs	i	Reductor	Motor	Fr2 [N]
238.0	727	1.2	4.12	H121	200LA6	6000
235.2	729	1.2	6.25	H121	180M4	6000
231.3	733	2.7	6.36	H102	180M4	15366
208.5	814	2.8	7.05	H102	180M4	15695
204.2	848	1.1	4.80	H121	200LA6	6000
190.9	898	1.1	7.70	H121	180M4	6000
185.8	922	3.4	5.27	H122	200LA6	25022
177.7	955	2.6	8.27	H102	180M4	16178
173.4	978	3.9	8.48	H122	180M4	25485
169.7	1009	3.3	5.78	H122	200LA6	25590
147.1	1153	2.4	9.99	H102	180M4	16698
142.1	1194	3.4	10.35	H122	180M4	26737
139.0	1232	3.1	7.05	H122	200LA6	26833
132.6	1279	2.3	11.09	H102	180M4	16954
126.6	1353	2.9	7.74	H122	200LA6	27411
116.1	1461	3.0	12.66	H122	180M4	27985
115.6	1482	2.7	8.48	H122	200LA6	27962
110.3	1537	2.0	13.32	H102	180M4	17339
106.0	1600	2.9	13.86	H122	180M4	28531
94.7	1808	2.3	10.35	H122	200LA6	29135
91.4	1857	1.7	16.09	H102	180M4	17617
86.9	1952	2.5	16.92	H122	180M4	29684
84.2	2014	3.9	17.45	H142	180M4	42354
82.3	2060	1.6	17.85	H102	180M4	17707
77.4	2213	2.1	12.66	H122	200LA6	30000
76.1	2229	2.2	19.32	H122	180M4	30000
75.0	2285	3.4	13.07	H142	200LA6	43436
74.1	2290	1.4	19.85	H102	180M4	17742
73.3	2313	3.5	20.04	H142	180M4	43719
71.5	2374	2.1	20.57	H122	180M4	30000
70.7	2423	2.0	13.86	H122	200LA6	30000
68.6	2474	1.3	21.44	H102	180M4	17727
65.3	2599	1.9	22.52	H122	180M4	30000
62.2	2753	3.0	15.75	H142	200LA6	45225
61.3	2766	1.2	23.97	H102	180M4	17637
60.9	2786	2.9	24.15	H142	180M4	45514
60.1	2823	1.8	24.47	H122	180M4	30000
57.9	2958	1.7	16.92	H122	200LA6	30000
56.8	2988	1.1	25.89	H102	180M4	17521
56.1	3051	2.7	17.45	H142	200LA6	46178
54.9	3088	2.6	26.76	H142	180M4	46470
53.5	3172	1.6	27.49	H122	180M4	30000
51.2	3315	1.0	28.73	H102	180M4	17287
50.7	3377	1.6	19.32	H122	200LA6	30000
49.2	3446	1.5	29.86	H122	180M4	30000

5.1 H/HA MOTORREDUCTORES (50Hz)

18.50 kW

n2 [rpm]	M2 [Nm]	fs	i	Reductor	Motor	Fr2 [N]
48.9	3503	2.4	20.04	H142	200LA6	47406
47.6	3596	1.5	20.57	H122	200LA6	30000
45.6	3720	2.2	32.24	H142	180M4	48110
44.5	3808	1.3	33.00	H122	180M4	30000
43.5	3937	1.3	22.52	H122	200LA6	30000
40.7	4169	1.2	36.13	H122	180M4	30000
40.6	4221	2.0	24.15	H142	200LA6	48931
37.8	4482	1.8	38.85	H142	180M4	49588
36.6	4678	1.8	26.76	H142	200LA6	49688
35.6	4805	1.1	27.49	H122	200LA6	30000
34.1	4968	1.6	43.05	H142	180M4	50309
33.3	5088	1.0	44.10	H122	180M4	30000
32.1	5171	1.0	45.77	H123	180M4	30000
30.4	5636	1.5	32.24	H142	200LA6	50859
30.4	5462	1.5	48.35	H143	180M4	51372
27.5	6047	1.3	53.53	H143	180M4	51934
25.2	6791	1.2	38.85	H142	200LA6	51701
24.8	6690	1.2	59.22	H143	180M4	52385
23.3	7117	1.1	62.99	H143	180M4	52600
22.8	7526	1.1	43.05	H142	200LA6	51986
20.6	8061	1.0	71.35	H143	180M4	52877
18.3	9162	0.9	53.53	H143	200LA6	52642

22.00 kW

n2 [rpm]	M2 [Nm]	fs	i	Reductor	Motor	Fr2 [N]
1194.4	171	3.8	1.23	H121	180L4	4402
1137.2	179	2.2	1.29	H101	180L4	3348
1042.4	196	2.3	1.41	H101	180L4	3417
1037.6	196	3.6	1.42	H121	180L4	4571
813.8	250	2.8	1.81	H121	180L4	4866
796.3	259	2.6	1.23	H121	200LB6	4887
735.0	277	2.7	2.00	H121	180L4	4991
723.3	282	1.6	2.03	H101	180L4	3699
691.8	298	2.5	1.42	H121	200LB6	5058
592.7	344	2.3	2.48	H121	180L4	5253
592.4	344	1.6	2.48	H101	180L4	3842
542.5	379	1.9	1.81	H121	200LB6	5351
497.5	410	2.0	2.95	H121	180L4	5462
490.0	420	1.9	2.00	H121	200LB6	5470
467.7	436	1.9	3.14	H121	180L4	5534
449.2	454	1.3	3.27	H101	180L4	4013
410.7	496	1.7	3.58	H121	180L4	5682
397.3	513	1.2	3.70	H101	180L4	4076

5.1 H/HA MOTORREDUCTORES (50Hz)

22.00 kW

n2 [rpm]	M2 [Nm]	fs	i	Reductor	Motor	Fr2 [N]
395.2	521	1.6	2.48	H121	200LB6	5713
357.0	571	1.5	4.12	H121	180L4	5834
348.2	585	1.0	4.22	H101	180L4	4131
331.7	621	1.4	2.95	H121	200LB6	5896
311.8	660	1.3	3.14	H121	200LB6	5956
306.3	665	1.3	4.80	H121	180L4	5988
301.5	676	0.9	4.88	H101	180L4	4174
281.9	723	1.2	5.21	H121	180L4	6000
279.3	722	2.5	5.26	H102	180L4	14314
273.8	752	1.2	3.58	H121	200LB6	6000
238.0	865	1.0	4.12	H121	200LB6	6000
235.2	866	1.0	6.25	H121	180L4	6000
231.3	872	2.3	6.36	H102	180L4	14840
208.5	967	2.4	7.05	H102	180L4	15111
208.5	967	3.7	7.05	H122	180L4	23829
204.2	1008	0.9	4.80	H121	200LB6	6000
190.9	1068	0.9	7.70	H121	180L4	6000
189.9	1062	3.5	7.74	H122	180L4	24370
185.8	1096	2.9	5.27	H122	200LB6	24460
177.7	1135	2.2	8.27	H102	180L4	15493
173.4	1163	3.3	8.48	H122	180L4	24889
169.7	1200	2.8	5.78	H122	200LB6	24975
154.2	1321	3.9	6.36	H142	200LB6	35673
147.1	1371	2.0	9.99	H102	180L4	15871
142.1	1420	2.8	10.35	H122	180L4	26010
139.1	1464	3.6	7.04	H142	200LB6	36612
139.0	1465	2.6	7.05	H122	200LB6	26082
132.6	1521	2.0	11.09	H102	180L4	16037
126.6	1609	2.4	7.74	H122	200LB6	26587
125.0	1630	3.4	7.84	H142	200LB6	37596
116.1	1737	2.5	12.66	H122	180L4	27094
115.6	1762	2.3	8.48	H122	200LB6	27059
110.3	1828	1.7	13.32	H102	180L4	16237
106.0	1902	2.4	13.86	H122	180L4	27556
103.7	1964	3.5	9.45	H142	200LB6	39291
94.7	2151	2.0	10.35	H122	200LB6	28033
93.6	2177	3.5	10.47	H142	200LB6	40213
93.3	2161	3.6	15.75	H142	180L4	40301
91.4	2208	1.4	16.09	H102	180L4	16286
86.9	2322	2.1	16.92	H122	180L4	28494
84.2	2395	3.3	17.45	H142	180L4	41214
82.3	2449	1.3	17.85	H102	180L4	16229
77.4	2632	1.8	12.66	H122	200LB6	28893
76.1	2651	1.9	19.32	H122	180L4	29043
75.0	2717	2.8	13.07	H142	200LB6	42143

5.1 H/HA MOTORREDUCTORES (50Hz)

22.00 kW

n2 [rpm]	M2 [Nm]	fs	i	Reductor	Motor	Fr2 [N]
74.1	2723	1.2	19.85	H102	180L4	16099
73.3	2750	2.9	20.04	H142	180L4	42410
71.5	2823	1.8	20.57	H122	180L4	29276
70.7	2882	1.7	13.86	H122	200LB6	29223
68.6	2942	1.1	21.44	H102	180L4	15952
65.3	3090	1.6	22.52	H122	180L4	29579
62.2	3274	2.5	15.75	H142	200LB6	43667
61.3	3289	1.0	23.97	H102	180L4	15653
60.9	3314	2.4	24.15	H142	180L4	43937
60.1	3357	1.5	24.47	H122	180L4	29815
57.9	3517	1.4	16.92	H122	200LB6	29793
56.8	3553	0.9	25.89	H102	180L4	15378
56.1	3628	2.3	17.45	H142	200LB6	44451
54.9	3672	2.2	26.76	H142	180L4	44722
53.5	3772	1.3	27.49	H122	180L4	30000
50.7	4016	1.3	19.32	H122	200LB6	30000
49.2	4098	1.2	29.86	H122	180L4	30000
48.9	4166	2.0	20.04	H142	200LB6	45423
47.6	4276	1.2	20.57	H122	200LB6	30000
45.6	4424	1.8	32.24	H142	180L4	46004
44.5	4528	1.1	33.00	H122	180L4	30000
43.5	4682	1.1	22.52	H122	200LB6	30000
40.7	4957	1.0	36.13	H122	180L4	30000
40.6	5020	1.7	24.15	H142	200LB6	46542
37.8	5331	1.5	38.85	H142	180L4	47051
36.6	5563	1.5	26.76	H142	200LB6	47040
35.6	5715	0.9	27.49	H122	200LB6	29859
34.1	5907	1.4	43.05	H142	180L4	47498
30.4	6702	1.3	32.24	H142	200LB6	47669
30.4	6495	1.2	48.35	H143	180L4	48280
27.5	7191	1.1	53.53	H143	180L4	48511
25.2	8076	1.0	38.85	H142	200LB6	47857
24.8	7956	1.0	59.22	H143	180L4	48598
23.3	8463	0.9	62.99	H143	180L4	48572
22.8	8950	0.9	43.05	H142	200LB6	47726

30.00 kW

n2 [rpm]	M2 [Nm]	fs	i	Reductor	Motor	Fr2 [N]
1198.4	232	2.8	1.23	H121	200L4	4257
1041.2	267	2.6	1.42	H121	200L4	4404
816.5	340	2.1	1.81	H121	200L4	4655
737.5	377	2.0	2.00	H121	200L4	4757
594.8	467	1.7	2.48	H121	200L4	4964

5.1 H/HA MOTORREDUCTORES (50Hz)

30.00 kW

n2 [rpm]	M2 [Nm]	fs	i	Reductor	Motor	Fr2 [N]
499.2	557	1.4	2.95	H121	200L4	5119
469.3	592	1.4	3.14	H121	200L4	5169
412.1	674	1.3	3.58	H121	200L4	5267
358.2	776	1.1	4.12	H121	200L4	5358
307.3	904	1.0	4.80	H121	200L4	5434
279.6	984	3.1	5.27	H122	200L4	21290
255.4	1077	3.0	5.78	H122	200L4	21732
209.4	1313	3.8	7.04	H142	200L4	31889
209.3	1314	2.7	7.05	H122	200L4	22681
190.5	1444	2.6	7.74	H122	200L4	23110
188.1	1462	3.6	7.84	H142	200L4	32737
174.0	1581	2.4	8.48	H122	200L4	23512
156.1	1762	3.7	9.45	H142	200L4	34195
142.6	1929	2.1	10.35	H122	200L4	24334
140.8	1953	3.7	10.47	H142	200L4	34986
116.5	2361	1.9	12.66	H122	200L4	25049
112.8	2437	3.0	13.07	H142	200L4	36635
106.4	2585	1.8	13.86	H122	200L4	25319
93.7	2937	2.7	15.75	H142	200L4	37927
87.2	3155	1.5	16.92	H122	200L4	25769
84.5	3255	2.4	17.45	H142	200L4	38588
76.3	3603	1.4	19.32	H122	200L4	25936
73.6	3737	2.1	20.04	H142	200L4	39400
71.7	3836	1.3	20.57	H122	200L4	25970
65.5	4200	1.2	22.52	H122	200L4	25961
61.1	4503	1.8	24.15	H142	200L4	40318
55.1	4991	1.6	26.76	H142	200L4	40715
53.7	5126	1.0	27.49	H122	200L4	25662
45.7	6012	1.3	32.24	H142	200L4	41186
38.0	7244	1.1	38.85	H142	200L4	41255
34.3	8028	1.0	43.05	H142	200L4	41080
30.5	8827	0.9	48.35	H143	200L4	41228

37.00 kW

n2 [rpm]	M2 [Nm]	fs	i	Reductor	Motor	Fr2 [N]
281.5	1205	3.8	5.27	H142	225S4	28881
233.7	1452	3.4	6.36	H142	225S4	30204
210.8	1609	3.1	7.04	H142	225S4	30925
189.3	1792	3.0	7.84	H142	225S4	31670
157.1	2159	3.0	9.45	H142	225S4	32921
141.8	2392	3.0	10.47	H142	225S4	33580
113.6	2986	2.4	13.07	H142	225S4	34896
94.3	3598	2.2	15.75	H142	225S4	35846

5.1 H/HA MOTORREDUCTORES (50Hz)

37.00 kW

n2 [rpm]	M2 [Nm]	fs	i	Reductor	Motor	Fr2 [N]
85.1	3987	2.0	17.45	H142	225S4	36289
74.1	4578	1.7	20.04	H142	225S4	36771
61.5	5517	1.5	24.15	H142	225S4	37167
55.5	6114	1.3	26.76	H142	225S4	37232
46.1	7365	1.1	32.24	H142	225S4	37007
38.2	8874	0.9	38.85	H142	225S4	36237

45.00 kW

n2 [rpm]	M2 [Nm]	fs	i	Reductor	Motor	Fr2 [N]
281.5	1465	3.1	5.27	H142	225M4	28102
233.7	1766	2.8	6.36	H142	225M4	29265
210.8	1957	2.6	7.04	H142	225M4	29884
189.3	2179	2.4	7.84	H142	225M4	30511
157.1	2625	2.5	9.45	H142	225M4	31525
141.8	2910	2.5	10.47	H142	225M4	32033
113.6	3631	2.0	13.07	H142	225M4	32964
94.3	4376	1.8	15.75	H142	225M4	33519
85.1	4849	1.6	17.45	H142	225M4	33710
74.1	5568	1.4	20.04	H142	225M4	33810
61.5	6709	1.2	24.15	H142	225M4	33598
55.5	7435	1.1	26.76	H142	225M4	33277

5.2 IH/IHA REDUCTOR - 1750 RPM

IHA32

Mn_2 [Nm]	i	Pn_1 [kW]	n2 [rpm]	Fr1 [N]	Fr2 [N]
75	5.38	2.67	325.3	330	1018
75	6.52	2.20	268.5	409	1085
71	8.11	1.66	215.8	373	1167
85	10.94	1.48	160.0	441	1289
75	13.25	1.08	132.1	363	1374
75	16.49	0.87	106.1	398	1478
85	20.26	0.80	86.4	453	1583
80	24.55	0.62	71.3	386	1688
75	30.55	0.47	57.3	374	1816
85	35.44	0.46	49.4	480	1908
85	44.10	0.37	39.7	398	2000
75	48.75	0.29	35.9	398	2000
89	60.67	0.28	28.9	472	2000

IHA33

Mn_2 [Nm]	i	Pn_1 [kW]	n2 [rpm]	Fr1 [N]	Fr2 [N]
94	51.32	0.36	34.1	472	2000
94	59.65	0.31	29.3	472	2000
94	72.27	0.25	24.2	472	2000
94	89.94	0.20	19.5	472	2000
94	110.51	0.17	15.8	472	2000
94	133.88	0.14	13.1	472	2000
94	166.61	0.11	10.5	472	2000
94	193.30	0.09	9.1	472	2000
94	240.55	0.08	7.3	472	2000
94	279.07	0.07	6.3	472	2000
94	347.29	0.05	5.0	472	2000

IHA41

Mn_2 [Nm]	i	Pn_1 [kW]	n2 [rpm]	Fr1 [N]	Fr2 [N]
24	1.45	3.07	1208.3	330	475
24	2.94	1.51	594.3	330	602
28	4.75	1.12	368.4	330	706
28	5.45	0.98	320.8	330	739
24	7.88	0.56	222.2	330	835
19	10.83	0.33	161.5	330	929

5.2 IH/IHA REDUCTOR - 1750 RPM

IHA42

Mn_2 [Nm]	i	Pn_1 [kW]	n2 [rpm]	Fr1 [N]	Fr2 [N]
132	5.38	4.67	325.3	330	2143
132	6.52	3.85	268.5	409	2284
122	8.11	2.88	215.8	369	2457
141	10.94	2.46	160.0	424	2714
132	13.25	1.90	132.1	381	2894
132	16.49	1.52	106.1	398	3112
141	20.26	1.33	86.4	432	3334
146	24.55	1.13	71.3	422	3554
132	30.55	0.82	57.3	359	3823
141	35.44	0.76	49.4	457	4017
132	44.10	0.57	39.7	371	4300
108	48.75	0.42	35.9	416	4300
122	60.67	0.38	28.9	428	4300

IHA43

Mn_2 [Nm]	i	Pn_1 [kW]	n2 [rpm]	Fr1 [N]	Fr2 [N]
141	51.32	0.54	34.1	427	4300
141	59.65	0.46	29.3	426	4300
141	72.27	0.38	24.2	409	4300
141	89.94	0.31	19.5	398	4300
141	110.51	0.25	15.8	403	4300
141	133.88	0.21	13.1	409	4300
141	166.61	0.16	10.5	398	4300
141	193.30	0.14	9.1	427	4300
141	240.55	0.11	7.3	398	4300
141	279.07	0.10	6.3	427	4300
141	347.29	0.08	5.0	398	4300

IHA51

Mn_2 [Nm]	i	Pn_1 [kW]	n2 [rpm]	Fr1 [N]	Fr2 [N]
38	1.45	4.90	1208.3	330	1309
38	2.94	2.41	594.3	330	1658
47	4.75	1.87	368.4	330	1945
47	5.45	1.63	320.8	330	2036
38	7.88	0.90	222.2	330	2302
24	10.83	0.41	161.5	330	2560

5.2 IH/IHA REDUCTOR - 1750 RPM

IHA52

Mn_2 [Nm]	i	Pn_1 [kW]	n2 [rpm]	Fr1 [N]	Fr2 [N]
226	5.14	8.37	340.3	550	2638
226	6.22	6.92	281.2	682	2811
226	7.73	5.57	226.3	664	3023
282	9.64	5.58	181.5	827	3253
263	11.67	4.31	150.0	636	3467
263	14.50	3.46	120.7	664	3727
282	16.91	3.18	103.5	758	3924
273	20.46	2.54	85.5	659	4181
263	25.43	1.98	68.8	641	4495
282	29.89	1.80	58.5	752	4744
282	36.17	1.49	48.4	682	5055
263	44.95	1.12	38.9	620	5435
282	49.78	1.08	35.2	798	5623
273	61.87	0.84	28.3	642	6000

IHA53

Mn_2 [Nm]	i	Pn_1 [kW]	n2 [rpm]	Fr1 [N]	Fr2 [N]
282	49.80	1.10	35.1	330	5624
282	60.25	0.91	29.1	409	5992
282	74.88	0.73	23.4	398	6000
282	88.02	0.62	19.9	421	6000
282	111.61	0.49	15.7	390	6000
282	138.71	0.40	12.6	398	6000
282	163.05	0.34	10.7	421	6000
282	200.27	0.27	8.7	403	6000
282	235.41	0.23	7.4	421	6000
282	284.81	0.19	6.1	409	6000
282	353.98	0.16	4.9	398	6000

IHA61

Mn_2 [Nm]	i	Pn_1 [kW]	n2 [rpm]	Fr1 [N]	Fr2 [N]
85	1.33	11.99	1312.5	550	1906
85	2.50	6.39	700.0	550	2350
103	4.38	4.46	399.1	550	2834
85	7.75	2.06	225.8	550	3426
66	10.67	1.17	164.1	550	3811

5.2 IH/IHA REDUCTOR - 1750 RPM

IHA62

Mn_2 [Nm]	i	Pn_1 [kW]	n2 [rpm]	Fr1 [N]	Fr2 [N]
357	5.14	13.26	340.3	550	3894
357	6.22	10.96	281.2	682	4150
357	7.73	8.82	226.3	664	4462
432	9.64	8.56	181.5	801	4802
414	11.67	6.77	150.0	652	5117
395	14.50	5.20	120.7	634	5502
470	16.91	5.30	103.5	842	5791
432	20.46	4.03	85.5	627	6171
404	25.43	3.03	68.8	621	6635
423	29.89	2.70	58.5	734	7002
442	36.17	2.33	48.4	712	7461
414	44.95	1.76	38.9	621	8000
348	49.78	1.33	35.2	626	8000
414	61.87	1.28	28.3	789	8000

IHA63

Mn_2 [Nm]	i	Pn_1 [kW]	n2 [rpm]	Fr1 [N]	Fr2 [N]
451	49.80	1.77	35.1	330	8000
451	60.25	1.46	29.1	409	8000
451	74.88	1.17	23.4	398	8000
451	88.02	1.00	19.9	421	8000
451	111.61	0.79	15.7	390	8000
451	138.71	0.63	12.6	398	8000
451	163.05	0.54	10.7	421	8000
451	200.27	0.44	8.7	403	8000
451	235.41	0.37	7.4	421	8000
451	284.81	0.31	6.1	409	8000
451	353.98	0.25	4.9	398	8000

IH032

Mn_2 [Nm]	i	Pn_1 [kW]	n2 [rpm]	Fr1 [N]	Fr2 [N]
89	4.70	3.63	372.7	742	2769
99	6.23	3.02	280.9	852	3037
118	7.76	2.89	225.4	877	3151
122	8.87	2.63	197.4	924	3300
132	10.14	2.48	172.5	952	3412
136	11.76	2.21	148.8	1001	3605
160	13.72	2.22	127.5	999	3625
160	14.66	2.08	119.4	1024	3743
179	16.77	2.03	104.4	1033	3795
188	18.20	1.97	96.2	1044	3854

5.2 IH/IHA REDUCTOR - 1750 RPM

IH032

Mn_2 [Nm]	i	Pn_1 [kW]	n2 [rpm]	Fr1 [N]	Fr2 [N]
188	19.90	1.80	88.0	1075	4029
188	22.68	1.58	77.2	1115	4296
188	23.83	1.51	73.4	1129	4400
188	26.39	1.36	66.3	1156	4620
188	29.70	1.21	58.9	1184	4884
188	32.89	1.09	53.2	1205	5120
188	37.92	0.95	46.1	1231	5464
188	41.40	0.87	42.3	1246	5500
188	47.25	0.76	37.0	1265	5500

IH033

Mn_2 [Nm]	i	Pn_1 [kW]	n2 [rpm]	Fr1 [N]	Fr2 [N]
188	53.59	0.68	32.7	1282	5500
188	66.78	0.55	26.2	1306	5500
188	74.84	0.49	23.4	1316	5500
188	99.27	0.37	17.6	1338	5500
188	108.05	0.34	16.2	1343	5500
188	123.71	0.30	14.2	1351	5500
188	143.33	0.26	12.2	1358	5500
188	178.61	0.21	9.8	1367	5500
188	197.17	0.19	8.9	1371	5500
188	245.70	0.15	7.1	1377	5500

IH041

Mn_2 [Nm]	i	Pn_1 [kW]	n2 [rpm]	Fr1 [N]	Fr2 [N]
24	1.44	3.09	1217.4	1018	549
24	2.00	2.22	875.0	1117	625
28	2.55	2.09	687.5	1131	665
28	2.71	1.96	644.7	1146	682
38	3.11	2.29	563.6	1109	676
42	3.59	2.23	487.7	1116	696
42	4.20	1.90	416.7	1153	744
42	5.00	1.60	350.0	1188	800
47	5.50	1.61	318.2	1186	810
47	6.09	1.46	287.3	1204	846
47	7.67	1.16	228.3	1238	931
52	8.75	1.12	200.0	1243	961

5.2 IH/IHA REDUCTOR - 1750 RPM

IH042

Mn_2 [Nm]	i	Pn_1 [kW]	n2 [rpm]	Fr1 [N]	Fr2 [N]
150	5.46	5.26	320.4	494	3589
150	7.19	3.99	243.5	718	4052
197	8.91	4.23	196.3	676	4056
226	10.31	4.18	169.7	686	4106
235	11.80	3.80	148.3	752	4303
235	13.57	3.31	128.9	841	4601
235	15.96	2.81	109.7	929	4965
235	19.00	2.36	92.1	1009	5379
235	21.00	2.14	83.3	1049	5627
244	23.15	2.02	75.6	1070	5799
244	26.04	1.79	67.2	1110	6112
263	27.50	1.83	63.6	1104	6106
263	30.45	1.65	57.5	1135	6393
263	34.10	1.47	51.3	1166	6600
263	37.76	1.33	46.3	1192	6600
263	43.75	1.15	40.0	1224	6600
263	47.53	1.06	36.8	1240	6600
263	54.25	0.93	32.3	1264	6600

IH043

Mn_2 [Nm]	i	Pn_1 [kW]	n2 [rpm]	Fr1 [N]	Fr2 [N]
282	61.83	0.89	28.3	1274	6600
282	76.67	0.72	22.8	1304	6600
282	87.05	0.63	20.1	1319	6600
282	114.55	0.48	15.3	1345	6600
282	125.69	0.44	13.9	1352	6600
282	142.04	0.39	12.3	1361	6600
282	165.38	0.33	10.6	1371	6600
282	205.07	0.27	8.5	1382	6600
282	227.50	0.24	7.7	1386	6600
282	282.10	0.19	6.2	1395	6600

IH051

Mn_2 [Nm]	i	Pn_1 [kW]	n2 [rpm]	Fr1 [N]	Fr2 [N]
38	1.27	5.58	1375.0	860	1374
56	1.42	7.51	1233.0	675	1350
56	2.13	5.01	823.5	914	1579
66	2.57	4.83	680.6	931	1658
75	3.17	4.49	552.6	964	1757
85	3.69	4.33	474.6	979	1825
85	4.00	4.00	437.5	1011	1885

5.2 IH/IHA REDUCTOR - 1750 RPM

IH051

Mn_2 [Nm]	i	Pn_1 [kW]	n2 [rpm]	Fr1 [N]	Fr2 [N]
89	4.77	3.54	366.9	1055	2001
94	5.25	3.38	333.3	1070	2058
94	5.82	3.05	300.8	1101	2144
94	7.33	2.42	238.6	1162	2349
94	8.38	2.12	209.0	1191	2473

IH052

Mn_2 [Nm]	i	Pn_1 [kW]	n2 [rpm]	Fr1 [N]	Fr2 [N]
244	5.73	8.15	305.6	328	4443
273	6.89	7.55	253.8	406	4642
320	8.53	7.15	205.2	458	4802
348	9.56	6.94	183.0	486	4884
367	11.51	6.08	152.0	599	5218
404	14.24	5.42	122.9	686	5530
423	16.59	4.87	105.5	759	5835
432	18.00	4.59	97.2	796	6011
432	19.97	4.13	87.6	855	6325
442	21.67	3.89	80.8	887	6515
442	24.71	3.41	70.8	950	6939
461	26.18	3.36	66.8	957	7006
461	28.44	3.09	61.5	992	7288
461	31.52	2.79	55.5	1032	7649
461	33.00	2.66	53.0	1048	7815
461	38.98	2.26	44.9	1102	8000
461	45.36	1.94	38.6	1144	8000
461	49.13	1.79	35.6	1163	8000
461	56.11	1.57	31.2	1192	8000

IH053

Mn_2 [Nm]	i	Pn_1 [kW]	n2 [rpm]	Fr1 [N]	Fr2 [N]
470	58.81	1.56	29.8	1198	8000
470	72.75	1.26	24.1	1236	8000
470	90.51	1.01	19.3	1268	8000
470	108.95	0.84	16.1	1290	8000
470	134.76	0.68	13.0	1311	8000
470	157.29	0.58	11.1	1323	8000
470	194.56	0.47	9.0	1338	8000
470	216.38	0.42	8.1	1344	8000
470	267.65	0.34	6.5	1354	8000

5.2 IH/IHA REDUCTOR - 1750 RPM

IH061

Mn_2 [Nm]	i	Pn_1 [kW]	n2 [rpm]	Fr1 [N]	Fr2 [N]
75	1.34	10.57	1302.3	2147	2040
113	2.13	10.03	823.5	2190	2234
113	2.57	8.29	680.6	2326	2423
122	3.17	7.29	552.6	2404	2590
141	3.69	7.22	474.6	2410	2654
141	4.00	6.66	437.5	2454	2749
150	4.77	5.96	366.9	2509	2910
160	5.25	5.75	333.3	2525	2979
160	5.82	5.19	300.8	2569	3114
160	7.33	4.12	238.6	2653	3437
160	8.38	3.60	209.0	2693	3633

IH062

Mn_2 [Nm]	i	Pn_1 [kW]	n2 [rpm]	Fr1 [N]	Fr2 [N]
470	5.38	16.69	325.6	972	7181
517	5.93	16.63	294.9	979	7240
517	7.39	13.35	236.8	1346	8018
564	8.50	12.67	205.9	1423	8270
564	9.39	11.47	186.5	1557	8658
611	11.69	9.98	149.7	1724	9291
658	12.67	9.92	138.2	1731	9366
658	14.75	8.52	118.6	1888	10053
752	16.29	8.81	107.5	1854	9972
780	17.67	8.43	99.1	1897	10202
799	20.28	7.52	86.3	1999	10787
799	23.27	6.55	75.2	2108	11512
799	25.70	5.94	68.1	2177	12000
752	29.33	4.89	59.7	2293	12000
799	32.00	4.77	54.7	2308	12000
752	36.99	3.88	47.3	2407	12000
799	40.33	3.78	43.4	2418	12000
799	46.06	3.31	38.0	2471	12000

IH063

Mn_2 [Nm]	i	Pn_1 [kW]	n2 [rpm]	Fr1 [N]	Fr2 [N]
799	49.45	3.15	35.4	2496	12000
799	54.61	2.85	32.0	2529	12000
799	68.00	2.29	25.7	2590	12000
799	85.82	1.81	20.4	2643	12000
799	94.76	1.64	18.5	2661	12000
799	118.00	1.32	14.8	2697	12000

5.2 IH/IHA REDUCTOR - 1750 RPM

IH063

Mn_2 [Nm]	i	Pn_1 [kW]	n2 [rpm]	Fr1 [N]	Fr2 [N]
799	135.40	1.15	12.9	2715	12000
799	149.51	1.04	11.7	2727	12000
799	170.67	0.91	10.2	2742	12000
799	186.18	0.84	9.4	2750	12000
799	215.21	0.72	8.1	2762	12000
799	234.67	0.66	7.5	2769	12000
799	268.00	0.58	6.5	2778	12000

IH081

Mn_2 [Nm]	i	Pn_1 [kW]	n2 [rpm]	Fr1 [N]	Fr2 [N]
188	1.30	27.38	1349.0	1049	2140
207	1.43	27.35	1225.0	1052	2159
216	1.93	21.15	906.2	1502	2437
263	2.54	19.56	688.5	1617	2565
291	3.25	16.94	538.5	1808	2761
291	3.72	14.79	470.1	1964	2943
301	4.00	14.21	437.5	2007	3005
301	4.67	12.18	375.0	2154	3228
310	5.54	10.58	316.0	2270	3451
320	6.08	9.92	287.7	2318	3562
329	7.50	8.29	233.3	2437	3875
329	8.44	7.36	207.2	2504	4000

IH082

Mn_2 [Nm]	i	Pn_1 [kW]	n2 [rpm]	Fr1 [N]	Fr2 [N]
658	5.39	23.31	324.8	947	9019
658	5.95	21.12	294.3	1140	9420
752	7.39	19.41	236.7	1292	9927
752	8.02	17.90	218.2	1426	10294
846	8.85	18.25	197.7	1395	10322
1034	11.01	17.93	159.0	1423	10532
1316	13.50	18.61	129.6	1363	10317
1410	14.90	18.07	117.5	1410	10432
1410	16.62	16.20	105.3	1576	11058
1410	18.53	14.53	94.5	1723	11705
1504	19.38	14.81	90.3	1699	11551
1504	21.39	13.42	81.8	1821	12166
1504	22.80	12.59	76.8	1895	12576
1504	26.60	10.79	65.8	2054	13601
1504	27.88	10.30	62.8	2098	13925
1504	31.15	9.22	56.2	2193	14709

5.2 IH/IHA REDUCTOR - 1750 RPM

IH082

Mn_2 [Nm]	i	Pn_1 [kW]	n2 [rpm]	Fr1 [N]	Fr2 [N]
1504	34.38	8.35	50.9	2270	15429
1504	38.70	7.42	45.2	2352	16329
1504	42.75	6.72	40.9	2414	17111
1504	48.13	5.96	36.4	2481	18000

IH083

Mn_2 [Nm]	i	Pn_1 [kW]	n2 [rpm]	Fr1 [N]	Fr2 [N]
1504	56.53	5.19	31.0	2559	18000
1692	71.48	4.61	24.5	2609	18000
1692	78.87	4.18	22.2	2646	18000
1692	85.56	3.86	20.4	2674	18000
1692	98.09	3.36	17.8	2717	18000
1692	112.78	2.92	15.5	2755	18000
1692	124.44	2.65	14.1	2779	18000
1692	142.15	2.32	12.3	2807	18000
1692	154.76	2.13	11.3	2824	18000
1692	162.35	2.03	10.8	2832	18000
1692	179.13	1.84	9.8	2849	18000
1692	195.07	1.69	9.0	2862	18000
1692	222.78	1.48	7.9	2880	18000

IH101

Mn_2 [Nm]	i	Pn_1 [kW]	n2 [rpm]	Fr1 [N]	Fr2 [N]
376	1.29	54.95	1353.8	1945	2612
423	1.41	56.66	1240.9	1882	2598
423	2.03	39.32	861.1	2519	3074
517	2.48	39.36	705.2	2518	3120
564	3.27	32.56	534.7	2768	3429
564	3.70	28.80	473.0	2906	3632
573	4.22	25.66	414.5	3021	3836
583	4.88	22.58	359.0	3134	4072
583	5.27	20.90	332.3	3196	4217
602	6.23	18.24	280.9	3294	4498
611	7.55	15.30	231.9	3402	4872
611	8.40	13.74	208.3	3459	5000

IH102

Mn_2 [Nm]	i	Pn_1 [kW]	n2 [rpm]	Fr1 [N]	Fr2 [N]
1692	5.26	61.37	332.5	1872	9555

5.2 IH/IHA REDUCTOR - 1750 RPM

IH102

Mn_2 [Nm]	i	Pn_1 [kW]	n2 [rpm]	Fr1 [N]	Fr2 [N]
1880	6.36	56.46	275.3	2050	9878
2162	7.05	58.53	248.2	1975	9408
2350	8.27	54.21	211.5	2131	9660
2632	9.99	50.28	175.1	2273	9796
2820	11.09	48.56	157.9	2336	9779
2914	13.32	41.74	131.3	2582	10718
3008	16.09	35.68	108.8	2801	11774
3008	17.85	32.16	98.0	2928	12590
3008	19.85	28.93	88.2	3045	13453
3008	21.44	26.78	81.6	3123	14102
3102	23.97	24.70	73.0	3198	14710
3102	25.89	22.87	67.6	3265	15401
3102	28.73	20.61	60.9	3346	16357
3008	30.72	18.69	57.0	3416	17349
3008	34.20	16.79	51.2	3484	18396
2632	38.45	13.07	45.5	3619	21009
3102	41.30	14.34	42.4	3573	19974
3102	45.82	12.92	38.2	3624	21091
3102	51.52	11.49	34.0	3676	22000

IH103

Mn_2 [Nm]	i	Pn_1 [kW]	n2 [rpm]	Fr1 [N]	Fr2 [N]
3290	55.47	11.56	31.6	3682	22000
3290	69.69	9.20	25.1	3766	22000
3290	79.82	8.04	21.9	3807	22000
3290	84.16	7.62	20.8	3822	22000
3290	93.36	6.87	18.7	3848	22000
3290	100.07	6.41	17.5	3865	22000
3290	120.84	5.31	14.5	3904	22000
3290	134.06	4.78	13.1	3922	22000
3290	143.42	4.47	12.2	3933	22000
3290	160.82	3.99	10.9	3950	22000
3290	181.07	3.54	9.7	3966	22000
3290	194.21	3.30	9.0	3975	22000
3290	215.45	2.98	8.1	3986	22000
3384	242.59	2.72	7.2	3995	22000

IH121

Mn_2 [Nm]	i	Pn_1 [kW]	n2 [rpm]	Fr1 [N]	Fr2 [N]
611	1.23	93.78	1421.9	1053	3102
658	1.42	87.74	1235.3	1238	3210

5.2 IH/IHA REDUCTOR - 1750 RPM

IH121

Mn_2 [Nm]	i	Pn_1 [kW]	n2 [rpm]	Fr1 [N]	Fr2 [N]
658	1.81	68.81	968.8	1819	3608
705	2.00	66.59	875.0	1888	3677
752	2.48	57.28	705.6	2173	3963
752	2.95	48.08	592.3	2456	4304
771	3.14	46.33	556.8	2510	4386
799	3.58	42.17	489.0	2637	4594
799	4.12	36.66	425.0	2807	4901
818	4.80	32.19	364.6	2944	5211
827	5.21	29.97	335.6	3012	5388
846	6.25	25.57	280.0	3147	5798
940	7.70	23.06	227.3	3224	6000

IH122

Mn_2 [Nm]	i	Pn_1 [kW]	n2 [rpm]	Fr1 [N]	Fr2 [N]
2820	5.27	102.05	331.8	973	13873
3008	5.78	99.42	303.0	1052	13972
3384	7.05	91.64	248.3	1285	14386
3478	7.74	85.75	226.0	1461	14886
3572	8.48	80.44	206.4	1620	15384
3760	10.35	69.37	169.2	1952	16625
4136	12.66	62.35	138.2	2162	17416
4324	13.86	59.53	126.2	2246	17753
4512	16.92	50.90	103.4	2505	19324
4700	19.32	46.43	90.6	2639	20249
4700	20.57	43.61	85.1	2723	20996
4700	22.52	39.83	77.7	2836	22104
4700	24.47	36.67	71.5	2931	23147
4700	27.49	32.63	63.7	3052	24663
4700	29.86	30.04	58.6	3130	25777
4700	33.00	27.19	53.0	3215	27161
4700	36.13	24.83	48.4	3286	28459
4700	44.10	20.34	39.7	3420	30000

IH123

Mn_2 [Nm]	i	Pn_1 [kW]	n2 [rpm]	Fr1 [N]	Fr2 [N]
4700	45.77	20.02	38.2	3442	30000
4700	55.87	16.40	31.3	3548	30000
4700	67.32	13.61	26.0	3630	30000
4700	73.71	12.43	23.7	3665	30000
4700	83.34	10.99	21.0	3707	30000
4700	89.97	10.18	19.4	3731	30000

5.2 IH/IHA REDUCTOR - 1750 RPM

IH123

Mn_2 [Nm]	i	Pn_1 [kW]	n2 [rpm]	Fr1 [N]	Fr2 [N]
4700	100.29	9.14	17.4	3761	30000
4700	108.34	8.46	16.1	3781	30000
4700	118.62	7.72	14.8	3803	30000
4700	128.18	7.15	13.7	3820	30000
4700	144.79	6.33	12.1	3844	30000
4700	155.22	5.90	11.3	3856	30000
4700	172.80	5.30	10.1	3874	30000
4700	189.19	4.84	9.2	3887	30000
4700	207.43	4.42	8.4	3900	30000
4700	230.92	3.97	7.6	3913	30000

IH142

Mn_2 [Nm]	i	Pn_1 [kW]	n2 [rpm]	Fr1 [N]	Fr2 [N]
4324	5.27	156.49	331.8	5427	17544
4606	6.36	138.34	275.4	6017	18654
4700	7.04	127.38	248.5	6374	19503
4982	7.84	121.25	223.1	6573	19885
6110	9.45	123.42	185.2	6503	18741
6768	10.47	123.36	167.1	6505	18062
6862	13.07	100.21	133.9	7258	20719
7332	15.75	88.86	111.1	7628	21957
7426	17.45	81.21	100.3	7877	23205
7520	20.04	71.62	87.3	8189	25066
7520	24.15	59.44	72.5	8585	28116
7520	26.76	53.63	65.4	8774	29879
7520	32.24	44.52	54.3	9071	33234
7520	38.85	36.95	45.0	9317	36807
7520	43.05	33.34	40.6	9435	38874

IH143

Mn_2 [Nm]	i	Pn_1 [kW]	n2 [rpm]	Fr1 [N]	Fr2 [N]
7520	48.35	30.32	36.2	9553	41292
7520	53.53	27.39	32.7	9647	43493
7520	59.22	24.76	29.6	9731	45753
7520	62.99	23.27	27.8	9778	47174
7520	71.35	20.55	24.5	9865	50129
7520	79.07	18.54	22.1	9929	52660
7520	86.43	16.96	20.2	9979	54922
7520	96.21	15.24	18.2	10034	55000
7520	104.51	14.03	16.7	10073	55000
7520	115.92	12.65	15.1	10117	55000

5.2 IH/IHA REDUCTOR - 1750 RPM

IH143

Mn_2 [Nm]	i	Pn_1 [kW]	n2 [rpm]	Fr1 [N]	Fr2 [N]
7520	128.47	11.41	13.6	10156	55000
7520	139.55	10.50	12.5	10185	55000
7520	154.33	9.50	11.3	10217	55000
7520	185.96	7.88	9.4	10269	55000
7520	206.08	7.11	8.5	10293	55000

5.3 IH/IHA REDUCTOR - 1400 RPM

IHA32

Mn_2 [Nm]	i	Pn_1 [kW]	n2 [rpm]	Fr1 [N]	Fr2 [N]
80	5.38	2.27	260.3	330	1096
80	6.52	1.87	214.8	409	1169
75	8.11	1.41	172.6	373	1257
90	10.94	1.26	128.0	441	1389
80	13.25	0.92	105.7	363	1481
80	16.49	0.74	84.9	398	1593
90	20.26	0.68	69.1	453	1706
85	24.55	0.53	57.0	386	1818
80	30.55	0.40	45.8	374	1956
90	35.44	0.39	39.5	480	2000
90	44.10	0.31	31.8	398	2000
80	48.75	0.25	28.7	398	2000
95	60.67	0.24	23.1	472	2000

IHA33

Mn_2 [Nm]	i	Pn_1 [kW]	n2 [rpm]	Fr1 [N]	Fr2 [N]
100	51.32	0.30	27.3	472	2000
100	59.65	0.26	23.5	472	2000
100	72.27	0.22	19.4	472	2000
100	89.94	0.17	15.6	472	2000
100	110.51	0.14	12.7	472	2000
100	133.88	0.12	10.5	472	2000
100	166.61	0.09	8.4	472	2000
100	193.30	0.08	7.2	472	2000
100	240.55	0.06	5.8	472	2000
100	279.07	0.06	5.0	472	2000
100	347.29	0.04	4.0	472	2000

IHA41

Mn_2 [Nm]	i	Pn_1 [kW]	n2 [rpm]	Fr1 [N]	Fr2 [N]
25	1.45	2.61	966.7	330	512
25	2.94	1.28	475.5	330	648
30	4.75	0.95	294.7	330	760
30	5.45	0.83	256.7	330	796
25	7.88	0.48	177.8	330	900
20	10.83	0.28	129.2	330	1001

5.3 IH/IHA REDUCTOR - 1400 RPM

IHA42

Mn_2 [Nm]	i	Pn_1 [kW]	n2 [rpm]	Fr1 [N]	Fr2 [N]
140	5.38	3.97	260.3	330	2308
140	6.52	3.28	214.8	409	2461
130	8.11	2.45	172.6	369	2647
150	10.94	2.09	128.0	424	2924
140	13.25	1.61	105.7	381	3117
140	16.49	1.30	84.9	398	3353
150	20.26	1.13	69.1	432	3591
155	24.55	0.96	57.0	422	3828
140	30.55	0.70	45.8	359	4118
150	35.44	0.65	39.5	457	4300
140	44.10	0.48	31.8	371	4300
115	48.75	0.36	28.7	416	4300
130	60.67	0.33	23.1	428	4300

IHA43

Mn_2 [Nm]	i	Pn_1 [kW]	n2 [rpm]	Fr1 [N]	Fr2 [N]
150	51.32	0.46	27.3	427	4300
150	59.65	0.39	23.5	426	4300
150	72.27	0.32	19.4	409	4300
150	89.94	0.26	15.6	398	4300
150	110.51	0.21	12.7	403	4300
150	133.88	0.17	10.5	409	4300
150	166.61	0.14	8.4	398	4300
150	193.30	0.12	7.2	427	4300
150	240.55	0.10	5.8	398	4300
150	279.07	0.08	5.0	427	4300
150	347.29	0.07	4.0	398	4300

IHA51

Mn_2 [Nm]	i	Pn_1 [kW]	n2 [rpm]	Fr1 [N]	Fr2 [N]
40	1.45	4.17	966.7	330	1410
40	2.94	2.05	475.5	330	1786
50	4.75	1.59	294.7	330	2095
50	5.45	1.39	256.7	330	2194
40	7.88	0.77	177.8	330	2479
25	10.83	0.35	129.2	330	2757

5.3 IH/IHA REDUCTOR - 1400 RPM

IHA52

Mn_2 [Nm]	i	Pn_1 [kW]	n2 [rpm]	Fr1 [N]	Fr2 [N]
240	5.14	7.13	272.2	550	2842
240	6.22	5.89	225.0	682	3029
240	7.73	4.74	181.0	664	3256
300	9.64	4.75	145.2	827	3505
280	11.67	3.66	120.0	636	3735
280	14.50	2.95	96.5	664	4015
300	16.91	2.71	82.8	758	4227
290	20.46	2.16	68.4	659	4504
280	25.43	1.68	55.0	641	4842
300	29.89	1.53	46.8	752	5110
300	36.17	1.27	38.7	682	5445
280	44.95	0.95	31.1	620	5855
300	49.78	0.92	28.1	798	6000
290	61.87	0.72	22.6	642	6000

IHA53

Mn_2 [Nm]	i	Pn_1 [kW]	n2 [rpm]	Fr1 [N]	Fr2 [N]
300	49.80	0.94	28.1	330	6000
300	60.25	0.78	23.2	409	6000
300	74.88	0.62	18.7	398	6000
300	88.02	0.53	15.9	421	6000
300	111.61	0.42	12.5	390	6000
300	138.71	0.34	10.1	398	6000
300	163.05	0.29	8.6	421	6000
300	200.27	0.23	7.0	403	6000
300	235.41	0.20	6.0	421	6000
300	284.81	0.16	4.9	409	6000
300	353.98	0.13	4.0	398	6000

IHA61

Mn_2 [Nm]	i	Pn_1 [kW]	n2 [rpm]	Fr1 [N]	Fr2 [N]
90	1.33	10.20	1050.0	550	2053
90	2.50	5.44	560.0	550	2531
110	4.38	3.79	319.3	550	3053
90	7.75	1.76	180.7	550	3691
70	10.67	0.99	131.2	550	4106

5.3 IH/IHA REDUCTOR - 1400 RPM

IHA62

Mn_2 [Nm]	i	Pn_1 [kW]	n2 [rpm]	Fr1 [N]	Fr2 [N]
380	5.14	11.28	272.2	550	4195
380	6.22	9.33	225.0	682	4470
380	7.73	7.50	181.0	664	4806
460	9.64	7.28	145.2	801	5173
440	11.67	5.76	120.0	652	5512
420	14.50	4.42	96.5	634	5926
500	16.91	4.51	82.8	842	6238
460	20.46	3.43	68.4	627	6647
430	25.43	2.58	55.0	621	7147
450	29.89	2.30	46.8	734	7543
470	36.17	1.98	38.7	712	8000
440	44.95	1.49	31.1	621	8000
370	49.78	1.14	28.1	626	8000
440	61.87	1.09	22.6	789	8000

IHA63

Mn_2 [Nm]	i	Pn_1 [kW]	n2 [rpm]	Fr1 [N]	Fr2 [N]
480	49.80	1.50	28.1	330	8000
480	60.25	1.24	23.2	409	8000
480	74.88	1.00	18.7	398	8000
480	88.02	0.85	15.9	421	8000
480	111.61	0.67	12.5	390	8000
480	138.71	0.54	10.1	398	8000
480	163.05	0.46	8.6	421	8000
480	200.27	0.37	7.0	403	8000
480	235.41	0.32	6.0	421	8000
480	284.81	0.26	4.9	409	8000
480	353.98	0.21	4.0	398	8000

IH032

Mn_2 [Nm]	i	Pn_1 [kW]	n2 [rpm]	Fr1 [N]	Fr2 [N]
95	4.70	3.09	298.1	700	2996
105	6.23	2.57	224.8	817	3285
125	7.76	2.46	180.3	843	3410
130	8.87	2.24	157.9	894	3572
140	10.14	2.11	138.0	924	3694
145	11.76	1.88	119.0	975	3902
170	13.72	1.89	102.0	973	3927
170	14.66	1.77	95.5	1000	4054
190	16.77	1.73	83.5	1010	4113
200	18.20	1.68	76.9	1021	4178

5.3 IH/IHA REDUCTOR - 1400 RPM

IH032

Mn_2 [Nm]	i	Pn_1 [kW]	n2 [rpm]	Fr1 [N]	Fr2 [N]
200	19.90	1.53	70.4	1054	4366
200	22.68	1.35	61.7	1097	4654
200	23.83	1.28	58.7	1112	4766
200	26.39	1.16	53.0	1140	5003
200	29.70	1.03	47.1	1169	5287
200	32.89	0.93	42.6	1192	5500
200	37.92	0.81	36.9	1220	5500
200	41.40	0.74	33.8	1236	5500
200	47.25	0.65	29.6	1257	5500

IH033

Mn_2 [Nm]	i	Pn_1 [kW]	n2 [rpm]	Fr1 [N]	Fr2 [N]
200	53.59	0.58	26.1	1274	5500
200	66.78	0.47	21.0	1300	5500
200	74.84	0.42	18.7	1311	5500
200	99.27	0.31	14.1	1334	5500
200	108.05	0.29	13.0	1339	5500
200	123.71	0.25	11.3	1348	5500
200	143.33	0.22	9.8	1355	5500
200	178.61	0.17	7.8	1365	5500
200	197.17	0.16	7.1	1369	5500
200	245.70	0.13	5.7	1375	5500

IH041

Mn_2 [Nm]	i	Pn_1 [kW]	n2 [rpm]	Fr1 [N]	Fr2 [N]
25	1.44	2.63	973.9	996	592
25	2.00	1.89	700.0	1101	675
30	2.55	1.78	550.0	1116	718
30	2.71	1.67	515.8	1132	736
40	3.11	1.95	450.9	1093	730
45	3.59	1.90	390.2	1100	752
45	4.20	1.62	333.3	1139	804
45	5.00	1.36	280.0	1176	864
50	5.50	1.37	254.6	1174	876
50	6.09	1.24	229.8	1193	914
50	7.67	0.99	182.6	1230	1000
55	8.75	0.95	160.0	1235	1000

5.3 IH/IHA REDUCTOR - 1400 RPM

IH042

Mn_2 [Nm]	i	Pn_1 [kW]	n2 [rpm]	Fr1 [N]	Fr2 [N]
160	5.46	4.47	256.3	434	3883
160	7.19	3.40	194.8	673	4382
210	8.91	3.60	157.1	628	4391
240	10.31	3.55	135.7	638	4449
250	11.80	3.24	118.6	709	4661
250	13.57	2.81	103.2	803	4983
250	15.96	2.39	87.7	897	5374
250	19.00	2.01	73.7	982	5820
250	21.00	1.82	66.7	1024	6088
260	23.15	1.72	60.5	1047	6274
260	26.04	1.52	53.8	1089	6600
280	27.50	1.55	50.9	1083	6600
280	30.45	1.40	46.0	1116	6600
280	34.10	1.25	41.1	1150	6600
280	37.76	1.13	37.1	1177	6600
280	43.75	0.98	32.0	1211	6600
280	47.53	0.90	29.4	1228	6600
280	54.25	0.79	25.8	1253	6600

IH043

Mn_2 [Nm]	i	Pn_1 [kW]	n2 [rpm]	Fr1 [N]	Fr2 [N]
300	61.83	0.76	22.6	1264	6600
300	76.67	0.61	18.3	1296	6600
300	87.05	0.54	16.1	1311	6600
300	114.55	0.41	12.2	1340	6600
300	125.69	0.37	11.1	1347	6600
300	142.04	0.33	9.9	1357	6600
300	165.38	0.28	8.5	1367	6600
300	205.07	0.23	6.8	1379	6600
300	227.50	0.21	6.2	1384	6600
300	282.10	0.17	5.0	1392	6600

IH051

Mn_2 [Nm]	i	Pn_1 [kW]	n2 [rpm]	Fr1 [N]	Fr2 [N]
40	1.27	4.75	1100.0	825	1483
60	1.42	6.39	986.4	630	1457
60	2.13	4.27	658.8	883	1705
70	2.57	4.11	544.4	901	1790
80	3.17	3.82	442.1	937	1897
90	3.69	3.69	379.7	952	1971
90	4.00	3.40	350.0	987	2036

5.3 IH/IHA REDUCTOR - 1400 RPM

IH051

Mn_2 [Nm]	i	Pn_1 [kW]	n2 [rpm]	Fr1 [N]	Fr2 [N]
95	4.77	3.01	293.6	1033	2160
100	5.25	2.88	266.7	1049	2222
100	5.82	2.60	240.6	1083	2315
100	7.33	2.06	190.9	1147	2500
100	8.38	1.80	167.2	1178	2500

IH052

Mn_2 [Nm]	i	Pn_1 [kW]	n2 [rpm]	Fr1 [N]	Fr2 [N]
260	5.73	6.93	244.4	259	4808
290	6.89	6.42	203.1	343	5024
340	8.53	6.09	164.2	398	5202
370	9.56	5.91	146.4	428	5292
390	11.51	5.17	121.6	548	5654
430	14.24	4.61	98.3	641	5993
450	16.59	4.14	84.4	718	6324
460	18.00	3.90	77.8	757	6513
460	19.97	3.52	70.1	821	6852
470	21.67	3.31	64.6	854	7058
470	24.71	2.90	56.7	921	7514
490	26.18	2.86	53.5	929	7588
490	28.44	2.63	49.2	966	7892
490	31.52	2.37	44.4	1008	8000
490	33.00	2.27	42.4	1026	8000
490	38.98	1.92	35.9	1083	8000
490	45.36	1.65	30.9	1127	8000
490	49.13	1.52	28.5	1148	8000
490	56.11	1.33	24.9	1179	8000

IH053

Mn_2 [Nm]	i	Pn_1 [kW]	n2 [rpm]	Fr1 [N]	Fr2 [N]
500	58.81	1.33	23.8	1185	8000
500	72.75	1.07	19.2	1226	8000
500	90.51	0.86	15.5	1260	8000
500	108.95	0.72	12.8	1283	8000
500	134.76	0.58	10.4	1305	8000
500	157.29	0.50	8.9	1319	8000
500	194.56	0.40	7.2	1334	8000
500	216.38	0.36	6.5	1340	8000
500	267.65	0.29	5.2	1352	8000

5.3 IH/IHA REDUCTOR - 1400 RPM

IH061

Mn_2 [Nm]	i	Pn_1 [kW]	n2 [rpm]	Fr1 [N]	Fr2 [N]
80	1.34	9.00	1041.9	2094	2204
120	2.13	8.53	658.8	2140	2415
120	2.57	7.05	544.4	2285	2618
130	3.17	6.20	442.1	2368	2799
150	3.69	6.15	379.7	2374	2870
150	4.00	5.67	350.0	2421	2972
160	4.77	5.07	293.6	2479	3146
170	5.25	4.89	266.7	2496	3221
170	5.82	4.42	240.6	2543	3367
170	7.33	3.50	190.9	2632	3700
170	8.38	3.07	167.2	2675	3700

IH062

Mn_2 [Nm]	i	Pn_1 [kW]	n2 [rpm]	Fr1 [N]	Fr2 [N]
500	5.38	14.21	260.5	853	7772
550	5.93	14.15	235.9	860	7839
550	7.39	11.36	189.4	1250	8677
600	8.50	10.78	164.7	1332	8953
600	9.39	9.76	149.2	1475	9371
650	11.69	8.49	119.8	1652	10056
700	12.67	8.44	110.5	1660	10141
700	14.75	7.25	94.9	1827	10881
800	16.29	7.50	86.0	1791	10801
830	17.67	7.17	79.2	1837	11051
850	20.28	6.40	69.0	1946	11682
850	23.27	5.58	60.2	2061	12000
850	25.70	5.05	54.5	2134	12000
800	29.33	4.16	47.7	2259	12000
850	32.00	4.06	43.8	2274	12000
800	36.99	3.30	37.9	2379	12000
850	40.33	3.22	34.7	2391	12000
850	46.06	2.82	30.4	2447	12000

IH063

Mn_2 [Nm]	i	Pn_1 [kW]	n2 [rpm]	Fr1 [N]	Fr2 [N]
850	49.45	2.68	28.3	2474	12000
850	54.61	2.43	25.6	2509	12000
850	68.00	1.95	20.6	2574	12000
850	85.82	1.54	16.3	2630	12000
850	94.76	1.40	14.8	2650	12000
850	118.00	1.12	11.9	2688	12000

5.3 IH/IHA REDUCTOR - 1400 RPM

IH063

Mn_2 [Nm]	i	Pn_1 [kW]	n2 [rpm]	Fr1 [N]	Fr2 [N]
850	135.40	0.98	10.3	2707	12000
850	149.51	0.89	9.4	2720	12000
850	170.67	0.78	8.2	2735	12000
850	186.18	0.71	7.5	2744	12000
850	215.21	0.62	6.5	2757	12000
850	234.67	0.56	6.0	2764	12000
850	268.00	0.49	5.2	2774	12000

IH081

Mn_2 [Nm]	i	Pn_1 [kW]	n2 [rpm]	Fr1 [N]	Fr2 [N]
200	1.30	23.30	1079.2	922	2316
220	1.43	23.27	980.0	925	2337
230	1.93	18.00	725.0	1404	2637
280	2.54	16.65	550.8	1527	2777
310	3.25	14.42	430.8	1730	2990
310	3.72	12.59	376.1	1896	3186
320	4.00	12.09	350.0	1941	3253
320	4.67	10.36	300.0	2098	3493
330	5.54	9.00	252.8	2221	3734
340	6.08	8.45	230.1	2272	3854
350	7.50	7.05	186.7	2398	4000
350	8.44	6.26	165.8	2470	4000

IH082

Mn_2 [Nm]	i	Pn_1 [kW]	n2 [rpm]	Fr1 [N]	Fr2 [N]
700	5.39	19.84	259.8	816	9756
700	5.95	17.98	235.4	1021	10188
800	7.39	16.52	189.3	1182	10739
800	8.02	15.23	174.5	1325	11135
900	8.85	15.53	158.2	1292	11171
1100	11.01	15.26	127.2	1321	11409
1400	13.50	15.84	103.7	1258	11195
1500	14.90	15.38	94.0	1308	11324
1500	16.62	13.79	84.3	1484	11998
1500	18.53	12.36	75.6	1641	12695
1600	19.38	12.60	72.2	1615	12535
1600	21.39	11.42	65.5	1745	13197
1600	22.80	10.72	61.4	1824	13639
1600	26.60	9.19	52.6	1993	14744
1600	27.88	8.76	50.2	2040	15093
1600	31.15	7.84	44.9	2141	15937

5.3 IH/IHA REDUCTOR - 1400 RPM

IH082

Mn_2 [Nm]	i	Pn_1 [kW]	n2 [rpm]	Fr1 [N]	Fr2 [N]
1600	34.38	7.11	40.7	2222	16712
1600	38.70	6.31	36.2	2310	17681
1600	42.75	5.72	32.8	2376	18000
1600	48.13	5.08	29.1	2447	18000

IH083

Mn_2 [Nm]	i	Pn_1 [kW]	n2 [rpm]	Fr1 [N]	Fr2 [N]
1600	56.53	4.41	24.8	2530	18000
1800	71.48	3.93	19.6	2583	18000
1800	78.87	3.56	17.8	2623	18000
1800	85.56	3.28	16.4	2653	18000
1800	98.09	2.86	14.3	2698	18000
1800	112.78	2.49	12.4	2739	18000
1800	124.44	2.26	11.2	2764	18000
1800	142.15	1.97	9.8	2794	18000
1800	154.76	1.81	9.1	2812	18000
1800	162.35	1.73	8.6	2821	18000
1800	179.13	1.57	7.8	2838	18000
1800	195.07	1.44	7.2	2852	18000
1800	222.78	1.26	6.3	2872	18000

IH101

Mn_2 [Nm]	i	Pn_1 [kW]	n2 [rpm]	Fr1 [N]	Fr2 [N]
400	1.29	46.76	1083.0	1816	2827
450	1.41	48.22	992.7	1749	2813
450	2.03	33.46	688.9	2427	3326
550	2.48	33.50	564.2	2425	3378
600	3.27	27.71	427.8	2691	3713
600	3.70	24.51	378.4	2838	3932
610	4.22	21.83	331.6	2961	4152
620	4.88	19.22	287.2	3081	4407
620	5.27	17.79	265.8	3147	4563
640	6.23	15.52	224.7	3251	4866
650	7.55	13.02	185.5	3366	5000
650	8.40	11.69	166.7	3427	5000

IH102

Mn_2 [Nm]	i	Pn_1 [kW]	n2 [rpm]	Fr1 [N]	Fr2 [N]
1800	5.26	52.23	266.0	1731	10378

5.3 IH/IHA REDUCTOR - 1400 RPM

IH102

Mn_2 [Nm]	i	Pn_1 [kW]	n2 [rpm]	Fr1 [N]	Fr2 [N]
2000	6.36	48.05	220.3	1919	10737
2300	7.05	49.81	198.6	1840	10244
2500	8.27	46.14	169.2	2006	10525
2800	9.99	42.79	140.1	2157	10686
3000	11.09	41.33	126.3	2223	10677
3100	13.32	35.53	105.1	2486	11693
3200	16.09	30.37	87.0	2719	12836
3200	17.85	27.37	78.4	2854	13715
3200	19.85	24.62	70.5	2979	14645
3200	21.44	22.79	65.3	3061	15343
3300	23.97	21.02	58.4	3141	16003
3300	25.89	19.46	54.1	3212	16747
3300	28.73	17.54	48.7	3299	17778
3200	30.72	15.91	45.6	3372	18842
3200	34.20	14.29	40.9	3446	19969
2800	38.45	11.12	36.4	3589	22000
3300	41.30	12.20	33.9	3540	21674
3300	45.82	11.00	30.6	3594	22000
3300	51.52	9.78	27.2	3649	22000

IH103

Mn_2 [Nm]	i	Pn_1 [kW]	n2 [rpm]	Fr1 [N]	Fr2 [N]
3500	55.47	9.84	25.2	3656	22000
3500	69.69	7.83	20.1	3745	22000
3500	79.82	6.84	17.5	3789	22000
3500	84.16	6.49	16.6	3804	22000
3500	93.36	5.85	15.0	3833	22000
3500	100.07	5.45	14.0	3850	22000
3500	120.84	4.52	11.6	3892	22000
3500	134.06	4.07	10.4	3911	22000
3500	143.42	3.81	9.8	3923	22000
3500	160.82	3.39	8.7	3941	22000
3500	181.07	3.01	7.7	3958	22000
3500	194.21	2.81	7.2	3967	22000
3500	215.45	2.53	6.5	3979	22000
3600	242.59	2.31	5.8	3989	22000

IH121

Mn_2 [Nm]	i	Pn_1 [kW]	n2 [rpm]	Fr1 [N]	Fr2 [N]
650	1.23	79.82	1137.5	869	3360
700	1.42	74.68	988.2	1066	3478

5.3 IH/IHA REDUCTOR - 1400 RPM

IH121

Mn_2 [Nm]	i	Pn_1 [kW]	n2 [rpm]	Fr1 [N]	Fr2 [N]
700	1.81	58.56	775.0	1685	3907
750	2.00	56.67	700.0	1757	3983
800	2.48	48.75	564.5	2061	4292
800	2.95	40.92	473.9	2362	4659
820	3.14	39.43	445.4	2419	4749
850	3.58	35.89	391.2	2555	4973
850	4.12	31.20	340.0	2735	5304
870	4.80	27.39	291.7	2881	5638
880	5.21	25.51	268.5	2953	5829
900	6.25	21.76	224.0	3097	6000
1000	7.70	19.63	181.8	3179	6000

IH122

Mn_2 [Nm]	i	Pn_1 [kW]	n2 [rpm]	Fr1 [N]	Fr2 [N]
3000	5.27	86.85	265.4	778	15066
3200	5.78	84.61	242.4	862	15180
3600	7.05	77.99	198.6	1110	15643
3700	7.74	72.98	180.8	1297	16186
3800	8.48	68.46	165.2	1467	16726
4000	10.35	59.04	135.3	1819	18071
4400	12.66	53.06	110.6	2043	18939
4600	13.86	50.67	101.0	2132	19311
4800	16.92	43.32	82.7	2408	21011
5000	19.32	39.52	72.5	2550	22015
5000	20.57	37.12	68.1	2640	22820
5000	22.52	33.90	62.2	2760	24014
5000	24.47	31.21	57.2	2861	25137
5000	27.49	27.77	50.9	2989	26770
5000	29.86	25.57	46.9	3072	27970
5000	33.00	23.14	42.4	3163	29461
5000	36.13	21.13	38.8	3238	30000
5000	44.10	17.31	31.8	3381	30000

IH123

Mn_2 [Nm]	i	Pn_1 [kW]	n2 [rpm]	Fr1 [N]	Fr2 [N]
5000	45.77	17.04	30.6	3405	30000
5000	55.87	13.96	25.1	3518	30000
5000	67.32	11.58	20.8	3605	30000
5000	73.71	10.58	19.0	3641	30000
5000	83.34	9.36	16.8	3686	30000
5000	89.97	8.67	15.6	3711	30000

5.3 IH/IHA REDUCTOR - 1400 RPM

IH123

Mn_2 [Nm]	i	Pn_1 [kW]	n2 [rpm]	Fr1 [N]	Fr2 [N]
5000	100.29	7.78	14.0	3744	30000
5000	108.34	7.20	12.9	3765	30000
5000	118.62	6.57	11.8	3788	30000
5000	128.18	6.08	10.9	3806	30000
5000	144.79	5.39	9.7	3832	30000
5000	155.22	5.02	9.0	3845	30000
5000	172.80	4.51	8.1	3864	30000
5000	189.19	4.12	7.4	3878	30000
5000	207.43	3.76	6.8	3891	30000
5000	230.92	3.38	6.1	3905	30000

IH142

Mn_2 [Nm]	i	Pn_1 [kW]	n2 [rpm]	Fr1 [N]	Fr2 [N]
4600	5.27	133.18	265.4	5102	19072
4900	6.36	117.74	220.3	5730	20279
5000	7.04	108.41	198.8	6109	21198
5300	7.84	103.19	178.5	6321	21620
6500	9.45	105.04	148.2	6247	20432
7200	10.47	104.98	133.7	6249	19728
7300	13.07	85.28	107.1	7050	22593
7800	15.75	75.63	88.9	7443	23946
7900	17.45	69.11	80.2	7708	25294
8000	20.04	60.95	69.8	8040	27303
8000	24.15	50.59	58.0	8462	30588
8000	26.76	45.65	52.3	8663	32488
8000	32.24	37.89	43.4	8978	36102
8000	38.85	31.45	36.0	9240	39950
8000	43.05	28.37	32.5	9365	42176

IH143

Mn_2 [Nm]	i	Pn_1 [kW]	n2 [rpm]	Fr1 [N]	Fr2 [N]
8000	48.35	25.81	29.0	9492	44781
8000	53.53	23.31	26.1	9591	47153
8000	59.22	21.07	23.6	9680	49587
8000	62.99	19.81	22.2	9731	51117
8000	71.35	17.49	19.6	9823	54301
8000	79.07	15.78	17.7	9891	55000
8000	86.43	14.43	16.2	9945	55000
8000	96.21	12.97	14.6	10003	55000
8000	104.51	11.94	13.4	10044	55000
8000	115.92	10.76	12.1	10091	55000

5.3 IH/IHA REDUCTOR - 1400 RPM

IH143

Mn_2 [Nm]	i	Pn_1 [kW]	n2 [rpm]	Fr1 [N]	Fr2 [N]
8000	128.47	9.71	10.9	10133	55000
8000	139.55	8.94	10.0	10164	55000
8000	154.33	8.08	9.1	10198	55000
8000	185.96	6.71	7.5	10252	55000
8000	206.08	6.05	6.8	10279	55000

5.4 IH/IHA REDUCTOR - 1140 RPM

IHA32

Mn_2 [Nm]	i	Pn_1 [kW]	n2 [rpm]	Fr1 [N]	Fr2 [N]
82	5.38	1.88	211.9	330	1174
82	6.52	1.55	174.9	409	1252
77	8.11	1.17	140.6	373	1346
92	10.94	1.04	104.2	441	1487
82	13.25	0.76	86.0	363	1586
82	16.49	0.61	69.1	398	1705
92	20.26	0.56	56.3	453	1827
87	24.55	0.44	46.4	386	1947
82	30.55	0.33	37.3	374	2000
92	35.44	0.32	32.2	480	2000
92	44.10	0.26	25.9	398	2000
82	48.75	0.21	23.4	398	2000
97	60.67	0.20	18.8	472	2000

IHA33

Mn_2 [Nm]	i	Pn_1 [kW]	n2 [rpm]	Fr1 [N]	Fr2 [N]
103	51.32	0.25	22.2	472	2000
103	59.65	0.22	19.1	472	2000
103	72.27	0.18	15.8	472	2000
103	89.94	0.14	12.7	472	2000
103	110.51	0.12	10.3	472	2000
103	133.88	0.10	8.5	472	2000
103	166.61	0.08	6.8	472	2000
103	193.30	0.07	5.9	472	2000
103	240.55	0.05	4.7	472	2000
103	279.07	0.05	4.1	472	2000
103	347.29	0.04	3.3	472	2000

IHA41

Mn_2 [Nm]	i	Pn_1 [kW]	n2 [rpm]	Fr1 [N]	Fr2 [N]
26	1.45	2.16	787.1	330	548
26	2.94	1.06	387.2	330	694
31	4.75	0.79	240.0	330	814
31	5.45	0.69	209.0	330	852
26	7.88	0.40	144.8	330	963
21	10.83	0.23	105.2	330	1072

5.4 IH/IHA REDUCTOR - 1140 RPM

IHA42

Mn_2 [Nm]	i	Pn_1 [kW]	n2 [rpm]	Fr1 [N]	Fr2 [N]
144	5.38	3.28	211.9	330	2472
144	6.52	2.71	174.9	409	2635
133	8.11	2.02	140.6	369	2834
154	10.94	1.73	104.2	424	3131
144	13.25	1.33	86.0	381	3338
144	16.49	1.07	69.1	398	3590
154	20.26	0.93	56.3	432	3846
159	24.55	0.80	46.4	422	4100
144	30.55	0.58	37.3	359	4300
154	35.44	0.53	32.2	457	4300
144	44.10	0.40	25.9	371	4300
118	48.75	0.30	23.4	416	4300
133	60.67	0.27	18.8	428	4300

IHA43

Mn_2 [Nm]	i	Pn_1 [kW]	n2 [rpm]	Fr1 [N]	Fr2 [N]
154	51.32	0.38	22.2	427	4300
154	59.65	0.32	19.1	426	4300
154	72.27	0.27	15.8	409	4300
154	89.94	0.21	12.7	398	4300
154	110.51	0.17	10.3	403	4300
154	133.88	0.14	8.5	409	4300
154	166.61	0.12	6.8	398	4300
154	193.30	0.10	5.9	427	4300
154	240.55	0.08	4.7	398	4300
154	279.07	0.07	4.1	427	4300
154	347.29	0.06	3.3	398	4300

IHA51

Mn_2 [Nm]	i	Pn_1 [kW]	n2 [rpm]	Fr1 [N]	Fr2 [N]
41	1.45	3.45	787.1	330	1510
41	2.94	1.70	387.2	330	1913
51	4.75	1.31	240.0	330	2243
51	5.45	1.14	209.0	330	2349
41	7.88	0.63	144.8	330	2655
26	10.83	0.29	105.2	330	2953

5.4 IH/IHA REDUCTOR - 1140 RPM

IHA52

Mn_2 [Nm]	i	Pn_1 [kW]	n2 [rpm]	Fr1 [N]	Fr2 [N]
246	5.14	5.89	221.7	550	3044
246	6.22	4.87	183.2	682	3243
246	7.73	3.92	147.4	664	3487
308	9.64	3.93	118.2	827	3753
287	11.67	3.03	97.7	636	3999
287	14.50	2.44	78.6	664	4300
308	16.91	2.24	67.4	758	4526
297	20.46	1.79	55.7	659	4823
287	25.43	1.39	44.8	641	5185
308	29.89	1.27	38.1	752	5472
308	36.17	1.05	31.5	682	5831
287	44.95	0.79	25.4	620	6000
308	49.78	0.76	22.9	798	6000
297	61.87	0.59	18.4	642	6000

IHA53

Mn_2 [Nm]	i	Pn_1 [kW]	n2 [rpm]	Fr1 [N]	Fr2 [N]
308	49.80	0.78	22.9	330	6000
308	60.25	0.64	18.9	409	6000
308	74.88	0.52	15.2	398	6000
308	88.02	0.44	12.9	421	6000
308	111.61	0.35	10.2	390	6000
308	138.71	0.28	8.2	398	6000
308	163.05	0.24	7.0	421	6000
308	200.27	0.19	5.7	403	6000
308	235.41	0.16	4.8	421	6000
308	284.81	0.14	4.0	409	6000
308	353.98	0.11	3.2	398	6000

IHA61

Mn_2 [Nm]	i	Pn_1 [kW]	n2 [rpm]	Fr1 [N]	Fr2 [N]
92	1.33	8.43	855.0	550	2198
92	2.50	4.50	456.0	550	2711
113	4.38	3.13	260.0	550	3269
92	7.75	1.45	147.1	550	3953
72	10.67	0.82	106.9	550	4397

5.4 IH/IHA REDUCTOR - 1140 RPM

IHA62

Mn_2 [Nm]	i	Pn_1 [kW]	n2 [rpm]	Fr1 [N]	Fr2 [N]
390	5.14	9.32	221.7	550	4492
390	6.22	7.71	183.2	682	4787
390	7.73	6.20	147.4	664	5147
472	9.64	6.02	118.2	801	5540
451	11.67	4.76	97.7	652	5903
431	14.50	3.66	78.6	634	6346
513	16.91	3.73	67.4	842	6681
472	20.46	2.84	55.7	627	7119
441	25.43	2.13	44.8	621	7654
461	29.89	1.90	38.1	734	8000
482	36.17	1.64	31.5	712	8000
451	44.95	1.24	25.4	621	8000
379	49.78	0.94	22.9	626	8000
451	61.87	0.90	18.4	789	8000

IHA63

Mn_2 [Nm]	i	Pn_1 [kW]	n2 [rpm]	Fr1 [N]	Fr2 [N]
492	49.80	1.24	22.9	330	8000
492	60.25	1.03	18.9	409	8000
492	74.88	0.83	15.2	398	8000
492	88.02	0.70	12.9	421	8000
492	111.61	0.55	10.2	390	8000
492	138.71	0.45	8.2	398	8000
492	163.05	0.38	7.0	421	8000
492	200.27	0.31	5.7	403	8000
492	235.41	0.26	4.8	421	8000
492	284.81	0.22	4.0	409	8000
492	353.98	0.17	3.2	398	8000

IH032

Mn_2 [Nm]	i	Pn_1 [kW]	n2 [rpm]	Fr1 [N]	Fr2 [N]
97	4.70	2.55	242.8	682	3253
108	6.23	2.13	183.0	803	3568
128	7.76	2.03	146.9	829	3712
133	8.87	1.85	128.6	881	3887
144	10.14	1.74	112.4	912	4022
149	11.76	1.56	96.9	964	4248
174	13.72	1.56	83.1	962	4287
174	14.66	1.46	77.8	990	4422
195	16.77	1.43	68.0	1000	4495
205	18.20	1.39	62.6	1012	4569

5.4 IH/IHA REDUCTOR - 1140 RPM

IH032

Mn_2 [Nm]	i	Pn_1 [kW]	n2 [rpm]	Fr1 [N]	Fr2 [N]
205	19.90	1.27	57.3	1045	4771
205	22.68	1.11	50.3	1089	5079
205	23.83	1.06	47.8	1105	5199
205	26.39	0.96	43.2	1134	5453
205	29.70	0.85	38.4	1164	5500
205	32.89	0.77	34.7	1187	5500
205	37.92	0.67	30.1	1216	5500
205	41.40	0.61	27.5	1232	5500
205	47.25	0.53	24.1	1253	5500

IH033

Mn_2 [Nm]	i	Pn_1 [kW]	n2 [rpm]	Fr1 [N]	Fr2 [N]
205	53.59	0.48	21.3	1271	5500
205	66.78	0.39	17.1	1297	5500
205	74.84	0.34	15.2	1308	5500
205	99.27	0.26	11.5	1332	5500
205	108.05	0.24	10.6	1338	5500
205	123.71	0.21	9.2	1346	5500
205	143.33	0.18	8.0	1354	5500
205	178.61	0.14	6.4	1364	5500
205	197.17	0.13	5.8	1368	5500
205	245.70	0.10	4.6	1375	5500

IH041

Mn_2 [Nm]	i	Pn_1 [kW]	n2 [rpm]	Fr1 [N]	Fr2 [N]
26	1.44	2.17	793.0	986	640
26	2.00	1.56	570.0	1094	728
31	2.55	1.47	447.9	1110	775
31	2.71	1.38	420.0	1126	795
41	3.11	1.61	367.1	1086	790
46	3.59	1.57	317.7	1093	815
46	4.20	1.34	271.4	1134	870
46	5.00	1.12	228.0	1171	935
51	5.50	1.14	207.3	1169	949
51	6.09	1.03	187.2	1189	990
51	7.67	0.81	148.7	1226	1000
56	8.75	0.79	130.3	1231	1000

5.4 IH/IHA REDUCTOR - 1140 RPM

IH042

Mn_2 [Nm]	i	Pn_1 [kW]	n2 [rpm]	Fr1 [N]	Fr2 [N]
164	5.46	3.70	208.7	409	4219
164	7.19	2.81	158.6	654	4753
215	8.91	2.97	127.9	608	4783
246	10.31	2.94	110.5	619	4855
256	11.80	2.67	96.6	691	5087
256	13.57	2.32	84.0	787	5431
256	15.96	1.98	71.4	883	5850
256	19.00	1.66	60.0	971	6328
256	21.00	1.50	54.3	1014	6600
267	23.15	1.42	49.2	1038	6600
267	26.04	1.26	43.8	1081	6600
287	27.50	1.28	41.5	1074	6600
287	30.45	1.16	37.4	1109	6600
287	34.10	1.04	33.4	1143	6600
287	37.76	0.94	30.2	1170	6600
287	43.75	0.81	26.1	1206	6600
287	47.53	0.74	24.0	1223	6600
287	54.25	0.65	21.0	1249	6600

IH043

Mn_2 [Nm]	i	Pn_1 [kW]	n2 [rpm]	Fr1 [N]	Fr2 [N]
308	61.83	0.63	18.4	1260	6600
308	76.67	0.50	14.9	1292	6600
308	87.05	0.44	13.1	1309	6600
308	114.55	0.34	9.9	1337	6600
308	125.69	0.31	9.1	1345	6600
308	142.04	0.27	8.0	1355	6600
308	165.38	0.23	6.9	1365	6600
308	205.07	0.19	5.6	1378	6600
308	227.50	0.17	5.0	1383	6600
308	282.10	0.14	4.0	1391	6600

IH051

Mn_2 [Nm]	i	Pn_1 [kW]	n2 [rpm]	Fr1 [N]	Fr2 [N]
41	1.27	3.93	895.7	811	1596
62	1.42	5.28	803.2	610	1573
62	2.13	3.53	536.5	870	1837
72	2.57	3.40	443.3	889	1931
82	3.17	3.16	360.0	925	2048
92	3.69	3.05	309.1	941	2128
92	4.00	2.81	285.0	977	2198

5.4 IH/IHA REDUCTOR - 1140 RPM

IH051

Mn_2 [Nm]	i	Pn_1 [kW]	n2 [rpm]	Fr1 [N]	Fr2 [N]
97	4.77	2.49	239.0	1024	2333
103	5.25	2.38	217.1	1041	2400
103	5.82	2.15	195.9	1075	2499
103	7.33	1.70	155.4	1141	2500
103	8.38	1.49	136.1	1172	2500

IH052

Mn_2 [Nm]	i	Pn_1 [kW]	n2 [rpm]	Fr1 [N]	Fr2 [N]
267	5.73	5.73	199.1	231	5228
297	6.89	5.31	165.4	317	5469
349	8.53	5.03	133.7	373	5675
379	9.56	4.88	119.2	403	5781
400	11.51	4.28	99.0	527	6174
441	14.24	3.81	80.1	622	6550
461	16.59	3.42	68.7	701	6910
472	18.00	3.22	63.3	741	7116
472	19.97	2.91	57.1	806	7478
482	21.67	2.74	52.6	841	7702
482	24.71	2.40	46.1	909	8000
502	26.18	2.36	43.5	917	8000
502	28.44	2.17	40.1	955	8000
502	31.52	1.96	36.2	999	8000
502	33.00	1.87	34.5	1017	8000
502	38.98	1.59	29.2	1075	8000
502	45.36	1.36	25.1	1121	8000
502	49.13	1.26	23.2	1142	8000
502	56.11	1.10	20.3	1174	8000

IH053

Mn_2 [Nm]	i	Pn_1 [kW]	n2 [rpm]	Fr1 [N]	Fr2 [N]
513	58.81	1.10	19.4	1180	8000
513	72.75	0.89	15.7	1222	8000
513	90.51	0.71	12.6	1256	8000
513	108.95	0.59	10.5	1280	8000
513	134.76	0.48	8.5	1303	8000
513	157.29	0.41	7.2	1317	8000
513	194.56	0.33	5.9	1332	8000
513	216.38	0.30	5.3	1339	8000
513	267.65	0.24	4.3	1350	8000

5.4 IH/IHA REDUCTOR - 1140 RPM

IH061

Mn_2 [Nm]	i	Pn_1 [kW]	n2 [rpm]	Fr1 [N]	Fr2 [N]
82	1.34	7.44	848.4	2072	2381
123	2.13	7.05	536.5	2119	2618
123	2.57	5.83	443.3	2268	2835
133	3.17	5.13	360.0	2353	3031
154	3.69	5.08	309.1	2358	3112
154	4.00	4.68	285.0	2407	3221
164	4.77	4.19	239.0	2467	3411
174	5.25	4.04	217.1	2484	3494
174	5.82	3.65	195.9	2532	3650
174	7.33	2.90	155.4	2624	3700
174	8.38	2.54	136.1	2668	3700

IH062

Mn_2 [Nm]	i	Pn_1 [kW]	n2 [rpm]	Fr1 [N]	Fr2 [N]
513	5.38	11.74	212.1	803	8456
564	5.93	11.69	192.1	811	8542
564	7.39	9.39	154.2	1211	9439
615	8.50	8.91	134.1	1295	9748
615	9.39	8.07	121.5	1441	10196
666	11.69	7.02	97.5	1623	10942
718	12.67	6.97	90.0	1630	11047
718	14.75	5.99	77.3	1802	11839
820	16.29	6.20	70.0	1765	11780
851	17.67	5.93	64.5	1812	12000
871	20.28	5.29	56.2	1923	12000
871	23.27	4.61	49.0	2041	12000
871	25.70	4.17	44.4	2117	12000
820	29.33	3.44	38.9	2244	12000
871	32.00	3.35	35.6	2259	12000
820	36.99	2.73	30.8	2368	12000
871	40.33	2.66	28.3	2380	12000
871	46.06	2.33	24.8	2437	12000

IH063

Mn_2 [Nm]	i	Pn_1 [kW]	n2 [rpm]	Fr1 [N]	Fr2 [N]
871	49.45	2.22	23.1	2465	12000
871	54.61	2.01	20.9	2500	12000
871	68.00	1.61	16.8	2568	12000
871	85.82	1.28	13.3	2625	12000
871	94.76	1.16	12.0	2645	12000
871	118.00	0.93	9.7	2684	12000

5.4 IH/IHA REDUCTOR - 1140 RPM

IH063

Mn_2 [Nm]	i	Pn_1 [kW]	n2 [rpm]	Fr1 [N]	Fr2 [N]
871	135.40	0.81	8.4	2704	12000
871	149.51	0.73	7.6	2717	12000
871	170.67	0.64	6.7	2732	12000
871	186.18	0.59	6.1	2742	12000
871	215.21	0.51	5.3	2755	12000
871	234.67	0.47	4.9	2762	12000
871	268.00	0.41	4.2	2772	12000

IH081

Mn_2 [Nm]	i	Pn_1 [kW]	n2 [rpm]	Fr1 [N]	Fr2 [N]
205	1.30	19.25	878.8	870	2517
226	1.43	19.23	798.0	872	2543
236	1.93	14.88	590.4	1363	2867
287	2.54	13.76	448.5	1489	3026
318	3.25	11.91	350.8	1697	3259
318	3.72	10.40	306.3	1867	3469
328	4.00	9.99	285.0	1913	3543
328	4.67	8.56	244.3	2074	3800
338	5.54	7.44	205.8	2201	4000
349	6.08	6.98	187.4	2253	4000
359	7.50	5.83	152.0	2382	4000
359	8.44	5.18	135.0	2456	4000

IH082

Mn_2 [Nm]	i	Pn_1 [kW]	n2 [rpm]	Fr1 [N]	Fr2 [N]
718	5.39	16.39	211.6	761	10594
718	5.95	14.86	191.7	971	11056
820	7.39	13.65	154.2	1136	11669
820	8.02	12.59	142.1	1283	12092
923	8.85	12.83	128.8	1249	12152
1128	11.01	12.61	103.6	1279	12448
1435	13.50	13.09	84.4	1214	12282
1538	14.90	12.71	76.5	1266	12441
1538	16.62	11.39	68.6	1446	13164
1538	18.53	10.22	61.5	1607	13909
1640	19.38	10.42	58.8	1580	13760
1640	21.39	9.44	53.3	1714	14468
1640	22.80	8.86	50.0	1794	14941
1640	26.60	7.59	42.9	1967	16125
1640	27.88	7.24	40.9	2015	16498
1640	31.15	6.48	36.6	2120	17402

5.4 IH/IHA REDUCTOR - 1140 RPM

IH082

Mn_2 [Nm]	i	Pn_1 [kW]	n2 [rpm]	Fr1 [N]	Fr2 [N]
1640	34.38	5.87	33.2	2203	18000
1640	38.70	5.22	29.4	2293	18000
1640	42.75	4.72	26.7	2361	18000
1640	48.13	4.19	23.7	2433	18000

IH083

Mn_2 [Nm]	i	Pn_1 [kW]	n2 [rpm]	Fr1 [N]	Fr2 [N]
1640	56.53	3.65	20.2	2518	18000
1845	71.48	3.25	15.9	2572	18000
1845	78.87	2.94	14.4	2613	18000
1845	85.56	2.71	13.3	2644	18000
1845	98.09	2.37	11.6	2691	18000
1845	112.78	2.06	10.1	2732	18000
1845	124.44	1.86	9.2	2758	18000
1845	142.15	1.63	8.0	2789	18000
1845	154.76	1.50	7.4	2807	18000
1845	162.35	1.43	7.0	2816	18000
1845	179.13	1.30	6.4	2834	18000
1845	195.07	1.19	5.8	2848	18000
1845	222.78	1.04	5.1	2868	18000

IH101

Mn_2 [Nm]	i	Pn_1 [kW]	n2 [rpm]	Fr1 [N]	Fr2 [N]
410	1.29	38.65	881.9	1762	3074
461	1.41	39.85	808.4	1694	3065
461	2.03	27.65	561.0	2389	3614
564	2.48	27.68	459.4	2387	3682
615	3.27	22.90	348.3	2660	4046
615	3.70	20.25	308.1	2810	4281
625	4.22	18.04	270.0	2936	4518
636	4.88	15.88	233.8	3059	4792
636	5.27	14.70	216.5	3126	4959
656	6.23	12.83	183.0	3233	5000
666	7.55	10.76	151.1	3351	5000
666	8.40	9.66	135.7	3414	5000

IH102

Mn_2 [Nm]	i	Pn_1 [kW]	n2 [rpm]	Fr1 [N]	Fr2 [N]
1845	5.26	43.16	216.6	1672	11427

5.4 IH/IHA REDUCTOR - 1140 RPM

IH102

Mn_2 [Nm]	i	Pn_1 [kW]	n2 [rpm]	Fr1 [N]	Fr2 [N]
2050	6.36	39.71	179.4	1865	11846
2358	7.05	41.16	161.7	1784	11371
2563	8.27	38.13	137.8	1954	11706
2870	9.99	35.36	114.1	2109	11930
3075	11.09	34.15	102.8	2177	11956
3178	13.32	29.36	85.6	2445	13061
3280	16.09	25.10	70.8	2684	14302
3280	17.85	22.62	63.9	2823	15244
3280	19.85	20.35	57.4	2951	16239
3280	21.44	18.83	53.2	3036	16988
3383	23.97	17.37	47.6	3117	17712
3383	25.89	16.08	44.0	3190	18508
3383	28.73	14.50	39.7	3279	19612
3280	30.72	13.14	37.1	3354	20734
3280	34.20	11.81	33.3	3429	21942
2870	38.45	9.19	29.6	3576	22000
3383	41.30	10.08	27.6	3526	22000
3383	45.82	9.09	24.9	3582	22000
3383	51.52	8.08	22.1	3638	22000

IH103

Mn_2 [Nm]	i	Pn_1 [kW]	n2 [rpm]	Fr1 [N]	Fr2 [N]
3588	55.47	8.13	20.6	3645	22000
3588	69.69	6.47	16.4	3736	22000
3588	79.82	5.65	14.3	3781	22000
3588	84.16	5.36	13.6	3797	22000
3588	93.36	4.83	12.2	3826	22000
3588	100.07	4.51	11.4	3844	22000
3588	120.84	3.73	9.4	3887	22000
3588	134.06	3.36	8.5	3907	22000
3588	143.42	3.15	8.0	3919	22000
3588	160.82	2.80	7.1	3937	22000
3588	181.07	2.49	6.3	3955	22000
3588	194.21	2.32	5.9	3964	22000
3588	215.45	2.09	5.3	3977	22000
3690	242.59	1.91	4.7	3986	22000

IH121

Mn_2 [Nm]	i	Pn_1 [kW]	n2 [rpm]	Fr1 [N]	Fr2 [N]
666	1.23	65.96	926.2	792	3666
718	1.42	61.71	804.7	994	3798

5.4 IH/IHA REDUCTOR - 1140 RPM

IH121

Mn_2 [Nm]	i	Pn_1 [kW]	n2 [rpm]	Fr1 [N]	Fr2 [N]
718	1.81	48.40	631.1	1628	4257
769	2.00	46.83	570.0	1703	4343
820	2.48	40.29	459.7	2014	4680
820	2.95	33.82	385.9	2322	5074
841	3.14	32.59	362.7	2381	5171
871	3.58	29.66	318.5	2520	5415
871	4.12	25.78	276.9	2705	5769
892	4.80	22.64	237.5	2855	6000
902	5.21	21.08	218.6	2929	6000
923	6.25	17.98	182.4	3076	6000
1025	7.70	16.22	148.1	3160	6000

IH122

Mn_2 [Nm]	i	Pn_1 [kW]	n2 [rpm]	Fr1 [N]	Fr2 [N]
3075	5.27	71.77	216.1	697	16577
3280	5.78	69.92	197.4	783	16729
3690	7.05	64.45	161.7	1037	17284
3793	7.74	60.31	147.2	1229	17880
3895	8.48	56.57	134.5	1402	18473
4100	10.35	48.79	110.2	1764	19943
4510	12.66	43.85	90.0	1993	20932
4715	13.86	41.87	82.2	2085	21359
4920	16.92	35.80	67.4	2367	23209
5125	19.32	32.66	59.0	2513	24314
5125	20.57	30.67	55.4	2605	25176
5125	22.52	28.01	50.6	2728	26455
5125	24.47	25.79	46.6	2832	27657
5125	27.49	22.95	41.5	2964	29406
5125	29.86	21.13	38.2	3048	30000
5125	33.00	19.12	34.5	3141	30000
5125	36.13	17.46	31.6	3218	30000
5125	44.10	14.31	25.9	3365	30000

IH123

Mn_2 [Nm]	i	Pn_1 [kW]	n2 [rpm]	Fr1 [N]	Fr2 [N]
5125	45.77	14.08	24.9	3389	30000
5125	55.87	11.53	20.4	3505	30000
5125	67.32	9.57	16.9	3594	30000
5125	73.71	8.74	15.5	3632	30000
5125	83.34	7.73	13.7	3678	30000
5125	89.97	7.16	12.7	3704	30000

5.4 IH/IHA REDUCTOR - 1140 RPM

IH123

Mn_2 [Nm]	i	Pn_1 [kW]	n2 [rpm]	Fr1 [N]	Fr2 [N]
5125	100.29	6.43	11.4	3737	30000
5125	108.34	5.95	10.5	3759	30000
5125	118.62	5.43	9.6	3782	30000
5125	128.18	5.03	8.9	3801	30000
5125	144.79	4.45	7.9	3827	30000
5125	155.22	4.15	7.3	3840	30000
5125	172.80	3.73	6.6	3860	30000
5125	189.19	3.41	6.0	3874	30000
5125	207.43	3.11	5.5	3888	30000
5125	230.92	2.79	4.9	3902	30000

IH142

Mn_2 [Nm]	i	Pn_1 [kW]	n2 [rpm]	Fr1 [N]	Fr2 [N]
4715	5.27	110.06	216.1	4966	21055
5023	6.36	97.30	179.4	5610	22389
5125	7.04	89.59	161.9	5999	23386
5433	7.84	85.28	145.4	6216	23880
6663	9.45	86.80	120.6	6140	22773
7380	10.47	86.76	108.8	6142	22114
7483	13.07	70.47	87.2	6963	25197
7995	15.75	62.50	72.4	7366	26714
8098	17.45	57.12	65.3	7638	28172
8200	20.04	50.37	56.9	7978	30336
8200	24.15	41.80	47.2	8410	33854
8200	26.76	37.72	42.6	8616	35889
8200	32.24	31.31	35.4	8940	39759
8200	38.85	25.99	29.3	9208	43880
8200	43.05	23.45	26.5	9337	46264

IH143

Mn_2 [Nm]	i	Pn_1 [kW]	n2 [rpm]	Fr1 [N]	Fr2 [N]
8200	48.35	21.33	23.6	9466	49054
8200	53.53	19.26	21.3	9568	51593
8200	59.22	17.41	19.2	9659	54200
8200	62.99	16.37	18.1	9711	55000
8200	71.35	14.45	16.0	9806	55000
8200	79.07	13.04	14.4	9876	55000
8200	86.43	11.93	13.2	9930	55000
8200	96.21	10.72	11.8	9990	55000
8200	104.51	9.87	10.9	10032	55000
8200	115.92	8.89	9.8	10080	55000

5.4 IH/IHA REDUCTOR - 1140 RPM

IH143

Mn_2 [Nm]	i	Pn_1 [kW]	n2 [rpm]	Fr1 [N]	Fr2 [N]
8200	128.47	8.03	8.9	10123	55000
8200	139.55	7.39	8.2	10155	55000
8200	154.33	6.68	7.4	10190	55000
8200	185.96	5.54	6.1	10246	55000
8200	206.08	5.00	5.5	10273	55000

5.5 IH/IHA REDUCTOR - 900 RPM

IHA32

Mn_2 [Nm]	i	Pn_1 [kW]	n2 [rpm]	Fr1 [N]	Fr2 [N]
84	5.38	1.52	167.3	330	1270
84	6.52	1.25	138.1	409	1354
79	8.11	0.94	111.0	373	1457
95	10.94	0.84	82.3	441	1609
84	13.25	0.62	67.9	363	1716
84	16.49	0.50	54.6	398	1845
95	20.26	0.45	44.4	453	1976
89	24.55	0.35	36.7	386	2000
84	30.55	0.27	29.5	374	2000
95	35.44	0.26	25.4	480	2000
95	44.10	0.21	20.4	398	2000
84	48.75	0.17	18.5	398	2000
100	60.67	0.16	14.8	472	2000

IHA33

Mn_2 [Nm]	i	Pn_1 [kW]	n2 [rpm]	Fr1 [N]	Fr2 [N]
105	51.32	0.20	17.5	472	2000
105	59.65	0.17	15.1	472	2000
105	72.27	0.14	12.4	472	2000
105	89.94	0.12	10.0	472	2000
105	110.51	0.09	8.1	472	2000
105	133.88	0.08	6.7	472	2000
105	166.61	0.06	5.4	472	2000
105	193.30	0.05	4.7	472	2000
105	240.55	0.04	3.7	472	2000
105	279.07	0.04	3.2	472	2000
105	347.29	0.03	2.6	472	2000

IHA41

Mn_2 [Nm]	i	Pn_1 [kW]	n2 [rpm]	Fr1 [N]	Fr2 [N]
26	1.45	1.74	621.4	330	593
26	2.94	0.86	305.7	330	751
32	4.75	0.64	189.5	330	881
32	5.45	0.56	165.0	330	922
26	7.88	0.32	114.3	330	1042
21	10.83	0.19	83.1	330	1100

5.5 IH/IHA REDUCTOR - 900 RPM

IHA42

Mn_2 [Nm]	i	Pn_1 [kW]	n2 [rpm]	Fr1 [N]	Fr2 [N]
147	5.38	2.66	167.3	330	2674
147	6.52	2.19	138.1	409	2851
137	8.11	1.64	111.0	369	3067
158	10.94	1.40	82.3	424	3388
147	13.25	1.08	67.9	381	3612
147	16.49	0.87	54.6	398	3885
158	20.26	0.76	44.4	432	4161
163	24.55	0.64	36.7	422	4300
147	30.55	0.47	29.5	359	4300
158	35.44	0.43	25.4	457	4300
147	44.10	0.32	20.4	371	4300
121	48.75	0.24	18.5	416	4300
137	60.67	0.22	14.8	428	4300

IHA43

Mn_2 [Nm]	i	Pn_1 [kW]	n2 [rpm]	Fr1 [N]	Fr2 [N]
158	51.32	0.30	17.5	427	4300
158	59.65	0.26	15.1	426	4300
158	72.27	0.22	12.4	409	4300
158	89.94	0.17	10.0	398	4300
158	110.51	0.14	8.1	403	4300
158	133.88	0.12	6.7	409	4300
158	166.61	0.09	5.4	398	4300
158	193.30	0.08	4.7	427	4300
158	240.55	0.06	3.7	398	4300
158	279.07	0.06	3.2	427	4300
158	347.29	0.05	2.6	398	4300

IHA51

Mn_2 [Nm]	i	Pn_1 [kW]	n2 [rpm]	Fr1 [N]	Fr2 [N]
42	1.45	2.79	621.4	330	1634
42	2.94	1.37	305.7	330	2069
53	4.75	1.06	189.5	330	2427
53	5.45	0.93	165.0	330	2542
42	7.88	0.51	114.3	330	2873
26	10.83	0.23	83.1	330	3000

5.5 IH/IHA REDUCTOR - 900 RPM

IHA52

Mn_2 [Nm]	i	Pn_1 [kW]	n2 [rpm]	Fr1 [N]	Fr2 [N]
252	5.14	4.76	175.0	550	3293
252	6.22	3.94	144.6	682	3509
252	7.73	3.17	116.4	664	3773
315	9.64	3.18	93.3	827	4061
294	11.67	2.45	77.1	636	4327
294	14.50	1.97	62.1	664	4652
315	16.91	1.81	53.2	758	4897
305	20.46	1.45	44.0	659	5218
294	25.43	1.12	35.4	641	5610
315	29.89	1.02	30.1	752	5921
315	36.17	0.85	24.9	682	6000
294	44.95	0.64	20.0	620	6000
315	49.78	0.62	18.1	798	6000
305	61.87	0.48	14.6	642	6000

IHA53

Mn_2 [Nm]	i	Pn_1 [kW]	n2 [rpm]	Fr1 [N]	Fr2 [N]
315	49.80	0.63	18.1	330	6000
315	60.25	0.52	14.9	409	6000
315	74.88	0.42	12.0	398	6000
315	88.02	0.36	10.2	421	6000
315	111.61	0.28	8.1	390	6000
315	138.71	0.23	6.5	398	6000
315	163.05	0.19	5.5	421	6000
315	200.27	0.16	4.5	403	6000
315	235.41	0.13	3.8	421	6000
315	284.81	0.11	3.2	409	6000
315	353.98	0.09	2.5	398	6000

IHA61

Mn_2 [Nm]	i	Pn_1 [kW]	n2 [rpm]	Fr1 [N]	Fr2 [N]
95	1.33	6.82	675.0	550	2379
95	2.50	3.64	360.0	550	2933
116	4.38	2.53	205.3	550	3537
95	7.75	1.17	116.1	550	4277
74	10.67	0.66	84.4	550	4500

5.5 IH/IHA REDUCTOR - 900 RPM

IHA62

Mn_2 [Nm]	i	Pn_1 [kW]	n2 [rpm]	Fr1 [N]	Fr2 [N]
399	5.14	7.54	175.0	550	4861
399	6.22	6.23	144.6	682	5179
399	7.73	5.01	116.4	664	5569
483	9.64	4.87	93.3	801	5994
462	11.67	3.85	77.1	652	6387
441	14.50	2.96	62.1	634	6867
525	16.91	3.02	53.2	842	7228
483	20.46	2.29	44.0	627	7702
452	25.43	1.73	35.4	621	8000
473	29.89	1.54	30.1	734	8000
494	36.17	1.33	24.9	712	8000
462	44.95	1.00	20.0	621	8000
389	49.78	0.76	18.1	626	8000
462	61.87	0.73	14.6	789	8000

IHA63

Mn_2 [Nm]	i	Pn_1 [kW]	n2 [rpm]	Fr1 [N]	Fr2 [N]
504	49.80	1.00	18.1	330	8000
504	60.25	0.83	14.9	409	8000
504	74.88	0.67	12.0	398	8000
504	88.02	0.57	10.2	421	8000
504	111.61	0.45	8.1	390	8000
504	138.71	0.36	6.5	398	8000
504	163.05	0.31	5.5	421	8000
504	200.27	0.25	4.5	403	8000
504	235.41	0.21	3.8	421	8000
504	284.81	0.18	3.2	409	8000
504	353.98	0.14	2.5	398	8000

IH032

Mn_2 [Nm]	i	Pn_1 [kW]	n2 [rpm]	Fr1 [N]	Fr2 [N]
100	4.70	2.06	191.7	665	3578
110	6.23	1.72	144.5	788	3925
131	7.76	1.64	115.9	815	4093
137	8.87	1.50	101.5	868	4285
147	10.14	1.41	88.7	900	4438
152	11.76	1.26	76.5	953	4685
179	13.72	1.26	65.6	951	4742
179	14.66	1.18	61.4	980	4889
200	16.77	1.16	53.7	990	4980
210	18.20	1.12	49.5	1002	5066

5.5 IH/IHA REDUCTOR - 900 RPM

IH032

Mn_2 [Nm]	i	Pn_1 [kW]	n2 [rpm]	Fr1 [N]	Fr2 [N]
210	19.90	1.03	45.2	1037	5285
210	22.68	0.90	39.7	1082	5500
210	23.83	0.86	37.8	1097	5500
210	26.39	0.77	34.1	1127	5500
210	29.70	0.69	30.3	1158	5500
210	32.89	0.62	27.4	1182	5500
210	37.92	0.54	23.7	1211	5500
210	41.40	0.49	21.7	1227	5500
210	47.25	0.43	19.1	1249	5500

IH033

Mn_2 [Nm]	i	Pn_1 [kW]	n2 [rpm]	Fr1 [N]	Fr2 [N]
210	53.59	0.39	16.8	1267	5500
210	66.78	0.31	13.5	1294	5500
210	74.84	0.28	12.0	1306	5500
210	99.27	0.21	9.1	1330	5500
210	108.05	0.19	8.3	1336	5500
210	123.71	0.17	7.3	1345	5500
210	143.33	0.15	6.3	1353	5500
210	178.61	0.12	5.0	1363	5500
210	197.17	0.11	4.6	1367	5500
210	245.70	0.08	3.7	1374	5500

IH041

Mn_2 [Nm]	i	Pn_1 [kW]	n2 [rpm]	Fr1 [N]	Fr2 [N]
26	1.44	1.76	626.1	977	699
26	2.00	1.26	450.0	1087	794
32	2.55	1.19	353.6	1104	847
32	2.71	1.12	331.6	1120	868
42	3.11	1.30	289.8	1079	866
47	3.59	1.27	250.8	1087	894
47	4.20	1.08	214.3	1128	954
47	5.00	0.91	180.0	1167	1000
53	5.50	0.92	163.6	1164	1000
53	6.09	0.83	147.8	1184	1000
53	7.67	0.66	117.4	1223	1000
58	8.75	0.63	102.9	1228	1000

5.5 IH/IHA REDUCTOR - 900 RPM

IH042

Mn_2 [Nm]	i	Pn_1 [kW]	n2 [rpm]	Fr1 [N]	Fr2 [N]
168	5.46	2.99	164.8	384	4643
168	7.19	2.27	125.2	635	5221
221	8.91	2.40	101.0	588	5278
252	10.31	2.37	87.3	599	5371
263	11.80	2.16	76.3	673	5626
263	13.57	1.88	66.3	772	5998
263	15.96	1.60	56.4	870	6452
263	19.00	1.34	47.4	959	6600
263	21.00	1.21	42.9	1004	6600
273	23.15	1.15	38.9	1028	6600
273	26.04	1.02	34.6	1073	6600
294	27.50	1.04	32.7	1065	6600
294	30.45	0.94	29.6	1101	6600
294	34.10	0.84	26.4	1136	6600
294	37.76	0.76	23.8	1164	6600
294	43.75	0.65	20.6	1200	6600
294	47.53	0.60	18.9	1218	6600
294	54.25	0.53	16.6	1244	6600

IH043

Mn_2 [Nm]	i	Pn_1 [kW]	n2 [rpm]	Fr1 [N]	Fr2 [N]
315	61.83	0.51	14.6	1256	6600
315	76.67	0.41	11.7	1289	6600
315	87.05	0.36	10.3	1306	6600
315	114.55	0.27	7.9	1335	6600
315	125.69	0.25	7.2	1343	6600
315	142.04	0.22	6.3	1353	6600
315	165.38	0.19	5.4	1364	6600
315	205.07	0.15	4.4	1376	6600
315	227.50	0.14	4.0	1381	6600
315	282.10	0.11	3.2	1391	6600

IH051

Mn_2 [Nm]	i	Pn_1 [kW]	n2 [rpm]	Fr1 [N]	Fr2 [N]
42	1.27	3.17	707.1	797	1737
63	1.42	4.27	634.1	591	1717
63	2.13	2.85	423.5	858	2003
74	2.57	2.75	350.0	877	2107
84	3.17	2.55	284.2	914	2236
95	3.69	2.47	244.1	930	2326
95	4.00	2.27	225.0	966	2401

5.5 IH/IHA REDUCTOR - 900 RPM

IH051

Mn_2 [Nm]	i	Pn_1 [kW]	n2 [rpm]	Fr1 [N]	Fr2 [N]
100	4.77	2.01	188.7	1015	2500
105	5.25	1.92	171.4	1032	2500
105	5.82	1.74	154.7	1067	2500
105	7.33	1.38	122.7	1135	2500
105	8.38	1.21	107.5	1167	2500

IH052

Mn_2 [Nm]	i	Pn_1 [kW]	n2 [rpm]	Fr1 [N]	Fr2 [N]
273	5.73	4.63	157.1	202	5759
305	6.89	4.29	130.6	290	6032
357	8.53	4.07	105.5	348	6274
389	9.56	3.95	94.1	379	6401
410	11.51	3.46	78.2	506	6834
452	14.24	3.08	63.2	603	7256
473	16.59	2.77	54.2	684	7654
483	18.00	2.61	50.0	725	7881
483	19.97	2.35	45.1	792	8000
494	21.67	2.21	41.5	827	8000
494	24.71	1.94	36.4	897	8000
515	26.18	1.91	34.4	905	8000
515	28.44	1.76	31.6	945	8000
515	31.52	1.59	28.6	989	8000
515	33.00	1.52	27.3	1007	8000
515	38.98	1.28	23.1	1067	8000
515	45.36	1.10	19.8	1114	8000
515	49.13	1.02	18.3	1136	8000
515	56.11	0.89	16.0	1168	8000

IH053

Mn_2 [Nm]	i	Pn_1 [kW]	n2 [rpm]	Fr1 [N]	Fr2 [N]
525	58.81	0.89	15.3	1174	8000
525	72.75	0.72	12.4	1217	8000
525	90.51	0.58	9.9	1253	8000
525	108.95	0.48	8.3	1278	8000
525	134.76	0.39	6.7	1301	8000
525	157.29	0.33	5.7	1315	8000
525	194.56	0.27	4.6	1331	8000
525	216.38	0.24	4.2	1338	8000
525	267.65	0.19	3.4	1349	8000

5.5 IH/IHA REDUCTOR - 900 RPM

IH061

Mn_2 [Nm]	i	Pn_1 [kW]	n2 [rpm]	Fr1 [N]	Fr2 [N]
84	1.34	6.01	669.8	2050	2603
126	2.13	5.70	423.5	2098	2873
126	2.57	4.71	350.0	2250	3108
137	3.17	4.15	284.2	2338	3323
158	3.69	4.11	244.1	2343	3417
158	4.00	3.79	225.0	2393	3536
168	4.77	3.39	188.7	2454	3700
179	5.25	3.27	171.4	2472	3700
179	5.82	2.95	154.7	2522	3700
179	7.33	2.34	122.7	2615	3700
179	8.38	2.05	107.5	2660	3700

IH062

Mn_2 [Nm]	i	Pn_1 [kW]	n2 [rpm]	Fr1 [N]	Fr2 [N]
525	5.38	9.49	167.4	753	9322
578	5.93	9.46	151.7	761	9432
578	7.39	7.59	121.8	1171	10402
630	8.50	7.20	105.9	1257	10753
630	9.39	6.52	95.9	1406	11238
683	11.69	5.68	77.0	1593	12000
735	12.67	5.64	71.0	1601	12000
735	14.75	4.84	61.0	1776	12000
840	16.29	5.01	55.3	1739	12000
872	17.67	4.79	50.9	1787	12000
893	20.28	4.28	44.4	1901	12000
893	23.27	3.73	38.7	2022	12000
893	25.70	3.38	35.0	2099	12000
840	29.33	2.78	30.7	2229	12000
893	32.00	2.71	28.1	2245	12000
840	36.99	2.21	24.3	2356	12000
893	40.33	2.15	22.3	2369	12000
893	46.06	1.88	19.5	2427	12000

IH063

Mn_2 [Nm]	i	Pn_1 [kW]	n2 [rpm]	Fr1 [N]	Fr2 [N]
893	49.45	1.79	18.2	2456	12000
893	54.61	1.62	16.5	2492	12000
893	68.00	1.30	13.2	2561	12000
893	85.82	1.03	10.5	2619	12000
893	94.76	0.93	9.5	2640	12000
893	118.00	0.75	7.6	2680	12000

5.5 IH/IHA REDUCTOR - 900 RPM

IH063

Mn_2 [Nm]	i	Pn_1 [kW]	n2 [rpm]	Fr1 [N]	Fr2 [N]
893	135.40	0.65	6.7	2701	12000
893	149.51	0.59	6.0	2714	12000
893	170.67	0.52	5.3	2730	12000
893	186.18	0.48	4.8	2739	12000
893	215.21	0.41	4.2	2753	12000
893	234.67	0.38	3.8	2760	12000
893	268.00	0.33	3.4	2770	12000

IH081

Mn_2 [Nm]	i	Pn_1 [kW]	n2 [rpm]	Fr1 [N]	Fr2 [N]
210	1.30	15.57	693.8	817	2771
231	1.43	15.55	630.0	819	2804
242	1.93	12.03	466.1	1322	3157
294	2.54	11.13	354.1	1451	3341
326	3.25	9.63	276.9	1664	3600
326	3.72	8.41	241.8	1839	3828
336	4.00	8.08	225.0	1886	3910
336	4.67	6.93	192.9	2051	4000
347	5.54	6.02	162.5	2180	4000
357	6.08	5.65	147.9	2233	4000
368	7.50	4.71	120.0	2366	4000
368	8.44	4.19	106.6	2442	4000

IH082

Mn_2 [Nm]	i	Pn_1 [kW]	n2 [rpm]	Fr1 [N]	Fr2 [N]
735	5.39	13.26	167.0	706	11651
735	5.95	12.01	151.4	922	12152
840	7.39	11.04	121.7	1091	12841
840	8.02	10.18	112.2	1241	13300
945	8.85	10.38	101.7	1206	13391
1155	11.01	10.20	81.8	1237	13766
1470	13.50	10.58	66.7	1170	13667
1575	14.90	10.28	60.4	1223	13866
1575	16.62	9.21	54.2	1408	14648
1575	18.53	8.26	48.6	1573	15455
1680	19.38	8.42	46.4	1545	15320
1680	21.39	7.63	42.1	1682	16087
1680	22.80	7.16	39.5	1764	16598
1680	26.60	6.14	33.8	1942	17879
1680	27.88	5.86	32.3	1991	18000
1680	31.15	5.24	28.9	2098	18000

5.5 IH/IHA REDUCTOR - 900 RPM

IH082

Mn_2 [Nm]	i	Pn_1 [kW]	n2 [rpm]	Fr1 [N]	Fr2 [N]
1680	34.38	4.75	26.2	2183	18000
1680	38.70	4.22	23.2	2275	18000
1680	42.75	3.82	21.1	2345	18000
1680	48.13	3.39	18.7	2419	18000

IH083

Mn_2 [Nm]	i	Pn_1 [kW]	n2 [rpm]	Fr1 [N]	Fr2 [N]
1680	56.53	2.95	15.9	2506	18000
1890	71.48	2.62	12.6	2562	18000
1890	78.87	2.38	11.4	2604	18000
1890	85.56	2.19	10.5	2635	18000
1890	98.09	1.91	9.2	2683	18000
1890	112.78	1.66	8.0	2725	18000
1890	124.44	1.51	7.2	2752	18000
1890	142.15	1.32	6.3	2784	18000
1890	154.76	1.21	5.8	2802	18000
1890	162.35	1.16	5.5	2812	18000
1890	179.13	1.05	5.0	2830	18000
1890	195.07	0.96	4.6	2845	18000
1890	222.78	0.84	4.0	2865	18000

IH101

Mn_2 [Nm]	i	Pn_1 [kW]	n2 [rpm]	Fr1 [N]	Fr2 [N]
420	1.29	31.25	696.2	1709	3386
473	1.41	32.23	638.2	1638	3384
473	2.03	22.37	442.9	2350	3978
578	2.48	22.39	362.7	2349	4067
630	3.27	18.52	275.0	2628	4468
630	3.70	16.38	243.2	2782	4722
641	4.22	14.59	213.2	2911	4980
651	4.88	12.85	184.6	3037	5000
651	5.27	11.89	170.9	3106	5000
672	6.23	10.37	144.4	3215	5000
683	7.55	8.70	119.3	3336	5000
683	8.40	7.82	107.1	3400	5000

IH102

Mn_2 [Nm]	i	Pn_1 [kW]	n2 [rpm]	Fr1 [N]	Fr2 [N]
1890	5.26	34.90	171.0	1613	12767

5.5 IH/IHA REDUCTOR - 900 RPM

IH102

Mn_2 [Nm]	i	Pn_1 [kW]	n2 [rpm]	Fr1 [N]	Fr2 [N]
2100	6.36	32.11	141.6	1811	13264
2415	7.05	33.29	127.6	1727	12817
2625	8.27	30.84	108.8	1902	13225
2940	9.99	28.60	90.1	2061	13535
3150	11.09	27.62	81.2	2130	13608
3255	13.32	23.74	67.5	2405	14826
3360	16.09	20.30	55.9	2650	16191
3360	17.85	18.29	50.4	2792	17209
3360	19.85	16.45	45.3	2923	18287
3360	21.44	15.23	42.0	3010	19096
3465	23.97	14.05	37.5	3094	19902
3465	25.89	13.01	34.8	3168	20764
3465	28.73	11.72	31.3	3259	21958
3360	30.72	10.63	29.3	3337	22000
3360	34.20	9.55	26.3	3413	22000
2940	38.45	7.43	23.4	3564	22000
3465	41.30	8.15	21.8	3512	22000
3465	45.82	7.35	19.6	3569	22000
3465	51.52	6.54	17.5	3627	22000

IH103

Mn_2 [Nm]	i	Pn_1 [kW]	n2 [rpm]	Fr1 [N]	Fr2 [N]
3675	55.47	6.58	16.2	3634	22000
3675	69.69	5.23	12.9	3727	22000
3675	79.82	4.57	11.3	3774	22000
3675	84.16	4.33	10.7	3790	22000
3675	93.36	3.91	9.6	3820	22000
3675	100.07	3.65	9.0	3838	22000
3675	120.84	3.02	7.5	3882	22000
3675	134.06	2.72	6.7	3902	22000
3675	143.42	2.54	6.3	3915	22000
3675	160.82	2.27	5.6	3934	22000
3675	181.07	2.01	5.0	3951	22000
3675	194.21	1.88	4.6	3961	22000
3675	215.45	1.69	4.2	3974	22000
3780	242.59	1.55	3.7	3984	22000

IH121

Mn_2 [Nm]	i	Pn_1 [kW]	n2 [rpm]	Fr1 [N]	Fr2 [N]
683	1.23	53.34	731.2	716	4054
735	1.42	49.91	635.3	923	4204

5.5 IH/IHA REDUCTOR - 900 RPM

IH121

Mn_2 [Nm]	i	Pn_1 [kW]	n2 [rpm]	Fr1 [N]	Fr2 [N]
735	1.81	39.14	498.2	1572	4700
788	2.00	37.88	450.0	1648	4801
840	2.48	32.58	362.9	1968	5171
840	2.95	27.35	304.6	2283	5597
861	3.14	26.35	286.4	2343	5706
893	3.58	23.99	251.5	2486	5973
893	4.12	20.85	218.6	2675	6000
914	4.80	18.31	187.5	2828	6000
924	5.21	17.05	172.6	2905	6000
945	6.25	14.54	144.0	3055	6000
1050	7.70	13.12	116.9	3141	6000

IH122

Mn_2 [Nm]	i	Pn_1 [kW]	n2 [rpm]	Fr1 [N]	Fr2 [N]
3150	5.27	58.04	170.6	616	18507
3360	5.78	56.55	155.8	703	18709
3780	7.05	52.12	127.7	964	19385
3885	7.74	48.77	116.2	1161	20049
3990	8.48	45.75	106.2	1338	20710
4200	10.35	39.46	87.0	1709	22339
4620	12.66	35.46	71.1	1944	23484
4830	13.86	33.86	64.9	2038	23985
5040	16.92	28.95	53.2	2327	26025
5250	19.32	26.41	46.6	2476	27258
5250	20.57	24.81	43.8	2570	28191
5250	22.52	22.66	40.0	2697	29575
5250	24.47	20.86	36.8	2803	30000
5250	27.49	18.56	32.7	2938	30000
5250	29.86	17.09	30.1	3024	30000
5250	33.00	15.46	27.3	3120	30000
5250	36.13	14.12	24.9	3199	30000
5250	44.10	11.57	20.4	3349	30000

IH123

Mn_2 [Nm]	i	Pn_1 [kW]	n2 [rpm]	Fr1 [N]	Fr2 [N]
5250	45.77	11.39	19.7	3374	30000
5250	55.87	9.33	16.1	3492	30000
5250	67.32	7.74	13.4	3583	30000
5250	73.71	7.07	12.2	3622	30000
5250	83.34	6.25	10.8	3669	30000
5250	89.97	5.79	10.0	3696	30000

5.5 IH/IHA REDUCTOR - 900 RPM

IH123

Mn_2 [Nm]	i	Pn_1 [kW]	n2 [rpm]	Fr1 [N]	Fr2 [N]
5250	100.29	5.20	9.0	3730	30000
5250	108.34	4.81	8.3	3752	30000
5250	118.62	4.39	7.6	3776	30000
5250	128.18	4.07	7.0	3795	30000
5250	144.79	3.60	6.2	3822	30000
5250	155.22	3.36	5.8	3836	30000
5250	172.80	3.02	5.2	3855	30000
5250	189.19	2.75	4.8	3871	30000
5250	207.43	2.51	4.3	3884	30000
5250	230.92	2.26	3.9	3899	30000

IH142

Mn_2 [Nm]	i	Pn_1 [kW]	n2 [rpm]	Fr1 [N]	Fr2 [N]
4830	5.27	89.01	170.6	4831	23594
5145	6.36	78.69	141.6	5490	25090
5250	7.04	72.45	127.8	5889	26187
5565	7.84	68.97	114.8	6111	26774
6825	9.45	70.20	95.2	6033	25788
7560	10.47	70.16	85.9	6035	25199
7665	13.07	56.99	68.8	6877	28552
8190	15.75	50.54	57.1	7289	30282
8295	17.45	46.19	51.6	7567	31876
8400	20.04	40.73	44.9	7916	34236
8400	24.15	33.81	37.3	8359	38042
8400	26.76	30.51	33.6	8570	40244
8400	32.24	25.32	27.9	8901	44431
8400	38.85	21.02	23.2	9176	48891
8400	43.05	18.96	20.9	9308	51470

IH143

Mn_2 [Nm]	i	Pn_1 [kW]	n2 [rpm]	Fr1 [N]	Fr2 [N]
8400	48.35	17.25	18.6	9440	54488
8400	53.53	15.58	16.8	9545	55000
8400	59.22	14.08	15.2	9638	55000
8400	62.99	13.24	14.3	9691	55000
8400	71.35	11.69	12.6	9788	55000
8400	79.07	10.54	11.4	9860	55000
8400	86.43	9.65	10.4	9916	55000
8400	96.21	8.67	9.3	9977	55000
8400	104.51	7.98	8.6	10020	55000
8400	115.92	7.19	7.8	10070	55000

5.5 IH/IHA REDUCTOR - 900 RPM

IH143

Mn_2 [Nm]	i	Pn_1 [kW]	n2 [rpm]	Fr1 [N]	Fr2 [N]
8400	128.47	6.49	7.0	10114	55000
8400	139.55	5.97	6.5	10146	55000
8400	154.33	5.40	5.8	10182	55000
8400	185.96	4.48	4.8	10239	55000
8400	206.08	4.05	4.4	10267	55000

5.6 IH/IHA REDUCTOR - 700 RPM

IHA32

Mn_2 [Nm]	i	Pn_1 [kW]	n2 [rpm]	Fr1 [N]	Fr2 [N]
85	5.38	1.19	130.1	330	1381
85	6.52	0.98	107.4	409	1473
80	8.11	0.74	86.3	373	1584
96	10.94	0.66	64.0	441	1750
85	13.25	0.48	52.8	363	1865
85	16.49	0.39	42.5	398	2000
96	20.26	0.36	34.5	453	2000
90	24.55	0.28	28.5	386	2000
85	30.55	0.21	22.9	374	2000
96	35.44	0.20	19.8	480	2000
96	44.10	0.16	15.9	398	2000
85	48.75	0.13	14.4	398	2000
101	60.67	0.13	11.5	472	2000

IHA33

Mn_2 [Nm]	i	Pn_1 [kW]	n2 [rpm]	Fr1 [N]	Fr2 [N]
106	51.32	0.16	13.6	472	2000
106	59.65	0.14	11.7	472	2000
106	72.27	0.11	9.7	472	2000
106	89.94	0.09	7.8	472	2000
106	110.51	0.07	6.3	472	2000
106	133.88	0.06	5.2	472	2000
106	166.61	0.05	4.2	472	2000
106	193.30	0.04	3.6	472	2000
106	240.55	0.03	2.9	472	2000
106	279.07	0.03	2.5	472	2000
106	347.29	0.02	2.0	472	2000

IHA41

Mn_2 [Nm]	i	Pn_1 [kW]	n2 [rpm]	Fr1 [N]	Fr2 [N]
27	1.45	1.37	483.3	330	645
27	2.94	0.67	237.7	330	817
32	4.75	0.50	147.4	330	958
32	5.45	0.44	128.3	330	1003
27	7.88	0.25	88.9	330	1100
21	10.83	0.15	64.6	330	1100

5.6 IH/IHA REDUCTOR - 700 RPM

IHA42

Mn_2 [Nm]	i	Pn_1 [kW]	n2 [rpm]	Fr1 [N]	Fr2 [N]
149	5.38	2.08	130.1	330	2908
149	6.52	1.72	107.4	409	3100
138	8.11	1.28	86.3	369	3334
159	10.94	1.10	64.0	424	3684
149	13.25	0.84	52.8	381	3927
149	16.49	0.68	42.5	398	4224
159	20.26	0.59	34.5	432	4300
165	24.55	0.50	28.5	422	4300
149	30.55	0.37	22.9	359	4300
159	35.44	0.34	19.8	457	4300
149	44.10	0.25	15.9	371	4300
122	48.75	0.19	14.4	416	4300
138	60.67	0.17	11.5	428	4300

IHA43

Mn_2 [Nm]	i	Pn_1 [kW]	n2 [rpm]	Fr1 [N]	Fr2 [N]
159	51.32	0.24	13.6	427	4300
159	59.65	0.21	11.7	426	4300
159	72.27	0.17	9.7	409	4300
159	89.94	0.14	7.8	398	4300
159	110.51	0.11	6.3	403	4300
159	133.88	0.09	5.2	409	4300
159	166.61	0.07	4.2	398	4300
159	193.30	0.06	3.6	427	4300
159	240.55	0.05	2.9	398	4300
159	279.07	0.04	2.5	427	4300
159	347.29	0.04	2.0	398	4300

IHA51

Mn_2 [Nm]	i	Pn_1 [kW]	n2 [rpm]	Fr1 [N]	Fr2 [N]
43	1.45	2.18	483.3	330	1776
43	2.94	1.07	237.7	330	2250
53	4.75	0.83	147.4	330	2639
53	5.45	0.73	128.3	330	2764
43	7.88	0.40	88.9	330	3000
27	10.83	0.18	64.6	330	3000

5.6 IH/IHA REDUCTOR - 700 RPM

IHA52

Mn_2 [Nm]	i	Pn_1 [kW]	n2 [rpm]	Fr1 [N]	Fr2 [N]
255	5.14	3.73	136.1	550	3581
255	6.22	3.08	112.5	682	3816
255	7.73	2.48	90.5	664	4103
319	9.64	2.49	72.6	827	4416
298	11.67	1.92	60.0	636	4705
298	14.50	1.54	48.3	664	5059
319	16.91	1.42	41.4	758	5325
308	20.46	1.13	34.2	659	5674
298	25.43	0.88	27.5	641	6000
319	29.89	0.80	23.4	752	6000
319	36.17	0.66	19.4	682	6000
298	44.95	0.50	15.6	620	6000
319	49.78	0.48	14.1	798	6000
308	61.87	0.37	11.3	642	6000

IHA53

Mn_2 [Nm]	i	Pn_1 [kW]	n2 [rpm]	Fr1 [N]	Fr2 [N]
319	49.80	0.49	14.1	330	6000
319	60.25	0.41	11.6	409	6000
319	74.88	0.33	9.3	398	6000
319	88.02	0.28	8.0	421	6000
319	111.61	0.22	6.3	390	6000
319	138.71	0.18	5.0	398	6000
319	163.05	0.15	4.3	421	6000
319	200.27	0.12	3.5	403	6000
319	235.41	0.10	3.0	421	6000
319	284.81	0.09	2.5	409	6000
319	353.98	0.07	2.0	398	6000

IHA61

Mn_2 [Nm]	i	Pn_1 [kW]	n2 [rpm]	Fr1 [N]	Fr2 [N]
96	1.33	5.34	525.0	550	2586
96	2.50	2.85	280.0	550	3189
117	4.38	1.98	159.7	550	3846
96	7.75	0.92	90.3	550	4500
74	10.67	0.52	65.6	550	4500

5.6 IH/IHA REDUCTOR - 700 RPM

IHA62

Mn_2 [Nm]	i	Pn_1 [kW]	n2 [rpm]	Fr1 [N]	Fr2 [N]
404	5.14	5.91	136.1	550	5285
404	6.22	4.88	112.5	682	5632
404	7.73	3.93	90.5	664	6055
489	9.64	3.81	72.6	801	6518
468	11.67	3.01	60.0	652	6945
446	14.50	2.32	48.3	634	7467
531	16.91	2.36	41.4	842	7860
489	20.46	1.80	34.2	627	8000
457	25.43	1.35	27.5	621	8000
478	29.89	1.20	23.4	734	8000
499	36.17	1.04	19.4	712	8000
468	44.95	0.78	15.6	621	8000
393	49.78	0.59	14.1	626	8000
468	61.87	0.57	11.3	789	8000

IHA63

Mn_2 [Nm]	i	Pn_1 [kW]	n2 [rpm]	Fr1 [N]	Fr2 [N]
510	49.80	0.79	14.1	330	8000
510	60.25	0.65	11.6	409	8000
510	74.88	0.52	9.3	398	8000
510	88.02	0.45	8.0	421	8000
510	111.61	0.35	6.3	390	8000
510	138.71	0.28	5.0	398	8000
510	163.05	0.24	4.3	421	8000
510	200.27	0.20	3.5	403	8000
510	235.41	0.17	3.0	421	8000
510	284.81	0.14	2.5	409	8000
510	353.98	0.11	2.0	398	8000

IH032

Mn_2 [Nm]	i	Pn_1 [kW]	n2 [rpm]	Fr1 [N]	Fr2 [N]
101	4.70	1.62	149.1	656	3969
112	6.23	1.35	112.4	781	4355
133	7.76	1.29	90.2	808	4553
138	8.87	1.17	79.0	862	4767
149	10.14	1.10	69.0	894	4941
154	11.76	0.99	59.5	948	5214
181	13.72	0.99	51.0	946	5297
181	14.66	0.93	47.8	975	5457
202	16.77	0.91	41.8	985	5500
213	18.20	0.88	38.5	998	5500

5.6 IH/IHA REDUCTOR - 700 RPM

IH032

Mn_2 [Nm]	i	Pn_1 [kW]	n2 [rpm]	Fr1 [N]	Fr2 [N]
213	19.90	0.80	35.2	1032	5500
213	22.68	0.70	30.9	1078	5500
213	23.83	0.67	29.4	1094	5500
213	26.39	0.61	26.5	1124	5500
213	29.70	0.54	23.6	1155	5500
213	32.89	0.49	21.3	1179	5500
213	37.92	0.42	18.5	1209	5500
213	41.40	0.39	16.9	1225	5500
213	47.25	0.34	14.8	1247	5500

IH033

Mn_2 [Nm]	i	Pn_1 [kW]	n2 [rpm]	Fr1 [N]	Fr2 [N]
213	53.59	0.30	13.1	1266	5500
213	66.78	0.24	10.5	1293	5500
213	74.84	0.22	9.3	1305	5500
213	99.27	0.16	7.0	1329	5500
213	108.05	0.15	6.5	1335	5500
213	123.71	0.13	5.7	1344	5500
213	143.33	0.11	4.9	1352	5500
213	178.61	0.09	3.9	1362	5500
213	197.17	0.08	3.5	1366	5500
213	245.70	0.07	2.9	1374	5500

IH041

Mn_2 [Nm]	i	Pn_1 [kW]	n2 [rpm]	Fr1 [N]	Fr2 [N]
27	1.44	1.38	487.0	972	769
27	2.00	0.99	350.0	1084	873
32	2.55	0.93	275.0	1100	932
32	2.71	0.87	257.9	1117	955
43	3.11	1.02	225.4	1075	956
48	3.59	0.99	195.1	1083	989
48	4.20	0.85	166.7	1125	1000
48	5.00	0.71	140.0	1164	1000
53	5.50	0.72	127.3	1162	1000
53	6.09	0.65	114.9	1182	1000
53	7.67	0.52	91.3	1221	1000
58	8.75	0.50	80.0	1226	1000

5.6 IH/IHA REDUCTOR - 700 RPM

IH042

Mn_2 [Nm]	i	Pn_1 [kW]	n2 [rpm]	Fr1 [N]	Fr2 [N]
170	5.46	2.34	128.2	372	5154
170	7.19	1.78	97.4	625	5783
223	8.91	1.88	78.5	578	5877
255	10.31	1.86	67.9	589	5998
266	11.80	1.69	59.3	664	6282
266	13.57	1.47	51.6	764	6600
266	15.96	1.25	43.9	863	6600
266	19.00	1.05	36.8	954	6600
266	21.00	0.95	33.3	999	6600
276	23.15	0.90	30.2	1023	6600
276	26.04	0.80	26.9	1068	6600
298	27.50	0.81	25.4	1061	6600
298	30.45	0.73	23.0	1097	6600
298	34.10	0.66	20.5	1132	6600
298	37.76	0.59	18.5	1161	6600
298	43.75	0.51	16.0	1198	6600
298	47.53	0.47	14.7	1216	6600
298	54.25	0.41	12.9	1242	6600

IH043

Mn_2 [Nm]	i	Pn_1 [kW]	n2 [rpm]	Fr1 [N]	Fr2 [N]
319	61.83	0.40	11.3	1253	6600
319	76.67	0.32	9.1	1287	6600
319	87.05	0.28	8.0	1304	6600
319	114.55	0.21	6.1	1334	6600
319	125.69	0.19	5.6	1342	6600
319	142.04	0.17	4.9	1352	6600
319	165.38	0.15	4.2	1363	6600
319	205.07	0.12	3.4	1376	6600
319	227.50	0.11	3.1	1381	6600
319	282.10	0.09	2.5	1390	6600

IH051

Mn_2 [Nm]	i	Pn_1 [kW]	n2 [rpm]	Fr1 [N]	Fr2 [N]
43	1.27	2.49	550.0	790	1902
64	1.42	3.34	493.2	582	1887
64	2.13	2.23	329.4	851	2199
74	2.57	2.15	272.2	871	2315
85	3.17	2.00	221.1	908	2459
96	3.69	1.93	189.8	925	2500
96	4.00	1.78	175.0	961	2500

5.6 IH/IHA REDUCTOR - 700 RPM

IH051

Mn_2 [Nm]	i	Pn_1 [kW]	n2 [rpm]	Fr1 [N]	Fr2 [N]
101	4.77	1.58	146.8	1011	2500
106	5.25	1.51	133.3	1028	2500
106	5.82	1.36	120.3	1063	2500
106	7.33	1.08	95.5	1132	2500
106	8.38	0.94	83.6	1164	2500

IH052

Mn_2 [Nm]	i	Pn_1 [kW]	n2 [rpm]	Fr1 [N]	Fr2 [N]
276	5.73	3.63	122.2	188	6400
308	6.89	3.36	101.5	277	6713
361	8.53	3.19	82.1	336	7002
393	9.56	3.09	73.2	367	7156
414	11.51	2.71	60.8	495	7637
457	14.24	2.41	49.2	593	8000
478	16.59	2.17	42.2	675	8000
489	18.00	2.04	38.9	717	8000
489	19.97	1.84	35.0	784	8000
499	21.67	1.73	32.3	820	8000
499	24.71	1.52	28.3	891	8000
521	26.18	1.50	26.7	900	8000
521	28.44	1.38	24.6	939	8000
521	31.52	1.24	22.2	984	8000
521	33.00	1.19	21.2	1003	8000
521	38.98	1.00	18.0	1063	8000
521	45.36	0.86	15.4	1111	8000
521	49.13	0.80	14.2	1133	8000
521	56.11	0.70	12.5	1166	8000

IH053

Mn_2 [Nm]	i	Pn_1 [kW]	n2 [rpm]	Fr1 [N]	Fr2 [N]
531	58.81	0.69	11.9	1172	8000
531	72.75	0.56	9.6	1215	8000
531	90.51	0.45	7.7	1251	8000
531	108.95	0.37	6.4	1276	8000
531	134.76	0.30	5.2	1300	8000
531	157.29	0.26	4.5	1314	8000
531	194.56	0.21	3.6	1330	8000
531	216.38	0.19	3.2	1337	8000
531	267.65	0.15	2.6	1349	8000

5.6 IH/IHA REDUCTOR - 700 RPM

IH061

Mn_2 [Nm]	i	Pn_1 [kW]	n2 [rpm]	Fr1 [N]	Fr2 [N]
85	1.34	4.71	520.9	2039	2866
128	2.13	4.47	329.4	2088	3178
128	2.57	3.69	272.2	2242	3434
138	3.17	3.25	221.1	2330	3672
159	3.69	3.22	189.8	2336	3700
159	4.00	2.97	175.0	2386	3700
170	4.77	2.65	146.8	2448	3700
181	5.25	2.56	133.3	2466	3700
181	5.82	2.31	120.3	2516	3700
181	7.33	1.83	95.5	2611	3700
181	8.38	1.61	83.6	2656	3700

IH062

Mn_2 [Nm]	i	Pn_1 [kW]	n2 [rpm]	Fr1 [N]	Fr2 [N]
531	5.38	7.43	130.2	728	10367
584	5.93	7.41	118.0	736	10510
584	7.39	5.95	94.7	1151	11565
638	8.50	5.64	82.3	1238	11970
638	9.39	5.11	74.6	1389	12000
691	11.69	4.45	59.9	1578	12000
744	12.67	4.42	55.3	1586	12000
744	14.75	3.79	47.5	1763	12000
850	16.29	3.93	43.0	1726	12000
882	17.67	3.75	39.6	1774	12000
903	20.28	3.35	34.5	1890	12000
903	23.27	2.92	30.1	2012	12000
903	25.70	2.64	27.2	2090	12000
850	29.33	2.18	23.9	2222	12000
903	32.00	2.12	21.9	2238	12000
850	36.99	1.73	18.9	2350	12000
903	40.33	1.68	17.4	2363	12000
903	46.06	1.47	15.2	2422	12000

IH063

Mn_2 [Nm]	i	Pn_1 [kW]	n2 [rpm]	Fr1 [N]	Fr2 [N]
903	49.45	1.40	14.2	2451	12000
903	54.61	1.27	12.8	2488	12000
903	68.00	1.02	10.3	2558	12000
903	85.82	0.81	8.2	2617	12000
903	94.76	0.73	7.4	2638	12000
903	118.00	0.59	5.9	2678	12000

5.6 IH/IHA REDUCTOR - 700 RPM

IH063

Mn_2 [Nm]	i	Pn_1 [kW]	n2 [rpm]	Fr1 [N]	Fr2 [N]
903	135.40	0.51	5.2	2699	12000
903	149.51	0.46	4.7	2712	12000
903	170.67	0.41	4.1	2728	12000
903	186.18	0.37	3.8	2738	12000
903	215.21	0.32	3.2	2752	12000
903	234.67	0.30	3.0	2759	12000
903	268.00	0.26	2.6	2770	12000

IH081

Mn_2 [Nm]	i	Pn_1 [kW]	n2 [rpm]	Fr1 [N]	Fr2 [N]
213	1.30	12.19	539.6	790	3077
234	1.43	12.18	490.0	793	3120
244	1.93	9.42	362.5	1302	3506
298	2.54	8.71	275.4	1432	3722
329	3.25	7.55	215.4	1648	4000
329	3.72	6.59	188.1	1824	4000
340	4.00	6.33	175.0	1872	4000
340	4.67	5.42	150.0	2039	4000
351	5.54	4.71	126.4	2170	4000
361	6.08	4.42	115.1	2224	4000
372	7.50	3.69	93.3	2358	4000
372	8.44	3.28	82.9	2435	4000

IH082

Mn_2 [Nm]	i	Pn_1 [kW]	n2 [rpm]	Fr1 [N]	Fr2 [N]
744	5.39	10.38	129.9	679	12923
744	5.95	9.41	117.7	897	13467
850	7.39	8.65	94.7	1068	14253
850	8.02	7.97	87.3	1219	14752
956	8.85	8.13	79.1	1184	14887
1169	11.01	7.99	63.6	1216	15367
1488	13.50	8.29	51.9	1148	15368
1594	14.90	8.05	47.0	1202	15622
1594	16.62	7.22	42.1	1389	16471
1594	18.53	6.47	37.8	1556	17349
1700	19.38	6.60	36.1	1528	17238
1700	21.39	5.98	32.7	1667	18000
1700	22.80	5.61	30.7	1750	18000
1700	26.60	4.81	26.3	1929	18000
1700	27.88	4.59	25.1	1979	18000
1700	31.15	4.10	22.5	2087	18000

5.6 IH/IHA REDUCTOR - 700 RPM

IH082

Mn_2 [Nm]	i	Pn_1 [kW]	n2 [rpm]	Fr1 [N]	Fr2 [N]
1700	34.38	3.72	20.4	2173	18000
1700	38.70	3.30	18.1	2267	18000
1700	42.75	2.99	16.4	2337	18000
1700	48.13	2.66	14.5	2412	18000

IH083

Mn_2 [Nm]	i	Pn_1 [kW]	n2 [rpm]	Fr1 [N]	Fr2 [N]
1700	56.53	2.31	12.4	2500	18000
1913	71.48	2.06	9.8	2556	18000
1913	78.87	1.86	8.9	2599	18000
1913	85.56	1.72	8.2	2631	18000
1913	98.09	1.50	7.1	2679	18000
1913	112.78	1.30	6.2	2722	18000
1913	124.44	1.18	5.6	2749	18000
1913	142.15	1.03	4.9	2781	18000
1913	154.76	0.95	4.5	2799	18000
1913	162.35	0.91	4.3	2809	18000
1913	179.13	0.82	3.9	2828	18000
1913	195.07	0.75	3.6	2843	18000
1913	222.78	0.66	3.1	2863	18000

IH101

Mn_2 [Nm]	i	Pn_1 [kW]	n2 [rpm]	Fr1 [N]	Fr2 [N]
425	1.29	24.48	541.5	1682	3763
478	1.41	25.24	496.4	1611	3770
478	2.03	17.52	344.4	2331	4416
584	2.48	17.53	282.1	2329	4533
638	3.27	14.50	213.9	2612	4980
638	3.70	12.83	189.2	2768	5000
648	4.22	11.43	165.8	2899	5000
659	4.88	10.06	143.6	3026	5000
659	5.27	9.31	132.9	3096	5000
680	6.23	8.13	112.3	3207	5000
691	7.55	6.81	92.8	3329	5000
691	8.40	6.12	83.3	3393	5000

IH102

Mn_2 [Nm]	i	Pn_1 [kW]	n2 [rpm]	Fr1 [N]	Fr2 [N]
1913	5.26	27.34	133.0	1583	14423

5.6 IH/IHA REDUCTOR - 700 RPM

IH102

Mn_2 [Nm]	i	Pn_1 [kW]	n2 [rpm]	Fr1 [N]	Fr2 [N]
2125	6.36	25.15	110.1	1784	15024
2444	7.05	26.07	99.3	1699	14628
2656	8.27	24.15	84.6	1876	15132
2975	9.99	22.40	70.1	2036	15559
3188	11.09	21.63	63.1	2107	15698
3294	13.32	18.59	52.5	2385	17053
3400	16.09	15.89	43.5	2633	18567
3400	17.85	14.33	39.2	2777	19675
3400	19.85	12.89	35.3	2909	20846
3400	21.44	11.93	32.6	2997	21727
3506	23.97	11.00	29.2	3082	22000
3506	25.89	10.19	27.0	3157	22000
3506	28.73	9.18	24.4	3249	22000
3400	30.72	8.33	22.8	3328	22000
3400	34.20	7.48	20.5	3405	22000
2975	38.45	5.82	18.2	3557	22000
3506	41.30	6.39	16.9	3505	22000
3506	45.82	5.76	15.3	3563	22000
3506	51.52	5.12	13.6	3622	22000

IH103

Mn_2 [Nm]	i	Pn_1 [kW]	n2 [rpm]	Fr1 [N]	Fr2 [N]
3719	55.47	5.15	12.6	3629	22000
3719	69.69	4.10	10.0	3723	22000
3719	79.82	3.58	8.8	3770	22000
3719	84.16	3.39	8.3	3786	22000
3719	93.36	3.06	7.5	3817	22000
3719	100.07	2.86	7.0	3835	22000
3719	120.84	2.36	5.8	3879	22000
3719	134.06	2.13	5.2	3900	22000
3719	143.42	1.99	4.9	3912	22000
3719	160.82	1.78	4.3	3932	22000
3719	181.07	1.58	3.9	3950	22000
3719	194.21	1.47	3.6	3959	22000
3719	215.45	1.33	3.2	3972	22000
3825	242.59	1.21	2.9	3983	22000

IH121

Mn_2 [Nm]	i	Pn_1 [kW]	n2 [rpm]	Fr1 [N]	Fr2 [N]
691	1.23	41.78	568.8	677	4526
744	1.42	39.09	494.1	887	4698

5.6 IH/IHA REDUCTOR - 700 RPM

IH121

Mn_2 [Nm]	i	Pn_1 [kW]	n2 [rpm]	Fr1 [N]	Fr2 [N]
744	1.81	30.65	387.5	1544	5238
797	2.00	29.66	350.0	1621	5356
850	2.48	25.52	282.3	1944	5768
850	2.95	21.42	236.9	2264	6000
871	3.14	20.64	222.7	2324	6000
903	3.58	18.79	195.6	2469	6000
903	4.12	16.33	170.0	2660	6000
924	4.80	14.34	145.8	2815	6000
935	5.21	13.35	134.2	2892	6000
956	6.25	11.39	112.0	3045	6000
1063	7.70	10.27	90.9	3132	6000

IH122

Mn_2 [Nm]	i	Pn_1 [kW]	n2 [rpm]	Fr1 [N]	Fr2 [N]
3188	5.27	45.46	132.7	575	20890
3400	5.78	44.29	121.2	664	21161
3825	7.05	40.82	99.3	927	21998
3931	7.74	38.20	90.4	1127	22745
4038	8.48	35.83	82.6	1306	23489
4250	10.35	30.90	67.7	1681	25312
4675	12.66	27.77	55.3	1919	26660
4888	13.86	26.52	50.5	2014	27255
5100	16.92	22.67	41.4	2306	29524
5313	19.32	20.68	36.2	2457	30000
5313	20.57	19.43	34.0	2553	30000
5313	22.52	17.74	31.1	2681	30000
5313	24.47	16.33	28.6	2788	30000
5313	27.49	14.54	25.5	2925	30000
5313	29.86	13.38	23.4	3012	30000
5313	33.00	12.11	21.2	3109	30000
5313	36.13	11.06	19.4	3189	30000
5313	44.10	9.06	15.9	3341	30000

IH123

Mn_2 [Nm]	i	Pn_1 [kW]	n2 [rpm]	Fr1 [N]	Fr2 [N]
5313	45.77	8.92	15.3	3366	30000
5313	55.87	7.31	12.5	3486	30000
5313	67.32	6.06	10.4	3578	30000
5313	73.71	5.54	9.5	3617	30000
5313	83.34	4.90	8.4	3665	30000
5313	89.97	4.54	7.8	3692	30000

5.6 IH/IHA REDUCTOR - 700 RPM

IH123

Mn_2 [Nm]	i	Pn_1 [kW]	n2 [rpm]	Fr1 [N]	Fr2 [N]
5313	100.29	4.07	7.0	3726	30000
5313	108.34	3.77	6.5	3749	30000
5313	118.62	3.44	5.9	3773	30000
5313	128.18	3.18	5.5	3792	30000
5313	144.79	2.82	4.8	3819	30000
5313	155.22	2.63	4.5	3834	30000
5313	172.80	2.36	4.0	3853	30000
5313	189.19	2.16	3.7	3869	30000
5313	207.43	1.97	3.4	3883	30000
5313	230.92	1.77	3.0	3898	30000

IH142

Mn_2 [Nm]	i	Pn_1 [kW]	n2 [rpm]	Fr1 [N]	Fr2 [N]
4888	5.27	69.71	132.7	4763	26746
5206	6.36	61.62	110.1	5430	28444
5313	7.04	56.74	99.4	5834	29660
5631	7.84	54.01	89.2	6059	30370
6906	9.45	54.98	74.1	5979	29582
7650	10.47	54.95	66.8	5982	29108
7756	13.07	44.64	53.5	6833	32777
8288	15.75	39.58	44.4	7251	34777
8394	17.45	36.17	40.1	7532	36535
8500	20.04	31.90	34.9	7885	39125
8500	24.15	26.48	29.0	8333	43263
8500	26.76	23.89	26.1	8547	45657
8500	32.24	19.83	21.7	8882	50210
8500	38.85	16.46	18.0	9160	55000
8500	43.05	14.85	16.3	9293	55000

IH143

Mn_2 [Nm]	i	Pn_1 [kW]	n2 [rpm]	Fr1 [N]	Fr2 [N]
8500	48.35	13.51	14.5	9428	55000
8500	53.53	12.20	13.1	9533	55000
8500	59.22	11.03	11.8	9628	55000
8500	62.99	10.37	11.1	9681	55000
8500	71.35	9.15	9.8	9780	55000
8500	79.07	8.26	8.8	9852	55000
8500	86.43	7.56	8.1	9909	55000
8500	96.21	6.79	7.3	9971	55000
8500	104.51	6.25	6.7	10014	55000
8500	115.92	5.63	6.0	10064	55000

5.6 IH/IHA REDUCTOR - 700 RPM

IH143

Mn_2 [Nm]	i	Pn_1 [kW]	n2 [rpm]	Fr1 [N]	Fr2 [N]
8500	128.47	5.08	5.5	10109	55000
8500	139.55	4.68	5.0	10141	55000
8500	154.33	4.23	4.5	10178	55000
8500	185.96	3.51	3.8	10236	55000
8500	206.08	3.17	3.4	10264	55000

5.7 IH/IHA REDUCTOR - 500 RPM

IHA32

Mn_2 [Nm]	i	Pn_1 [kW]	n2 [rpm]	Fr1 [N]	Fr2 [N]
86	5.38	0.85	93.0	330	1545
86	6.52	0.71	76.7	409	1647
81	8.11	0.53	61.6	373	1772
97	10.94	0.47	45.7	441	1958
86	13.25	0.35	37.7	363	2000
86	16.49	0.28	30.3	398	2000
97	20.26	0.26	24.7	453	2000
91	24.55	0.20	20.4	386	2000
86	30.55	0.15	16.4	374	2000
97	35.44	0.15	14.1	480	2000
97	44.10	0.12	11.3	398	2000
86	48.75	0.09	10.3	398	2000
102	60.67	0.09	8.2	472	2000

IHA33

Mn_2 [Nm]	i	Pn_1 [kW]	n2 [rpm]	Fr1 [N]	Fr2 [N]
108	51.32	0.11	9.7	472	2000
108	59.65	0.10	8.4	472	2000
108	72.27	0.08	6.9	472	2000
108	89.94	0.07	5.6	472	2000
108	110.51	0.05	4.5	472	2000
108	133.88	0.04	3.7	472	2000
108	166.61	0.04	3.0	472	2000
108	193.30	0.03	2.6	472	2000
108	240.55	0.02	2.1	472	2000
108	279.07	0.02	1.8	472	2000
108	347.29	0.02	1.4	472	2000

IHA41

Mn_2 [Nm]	i	Pn_1 [kW]	n2 [rpm]	Fr1 [N]	Fr2 [N]
27	1.45	0.98	345.2	330	721
27	2.94	0.48	169.8	330	914
32	4.75	0.36	105.3	330	1071
32	5.45	0.31	91.7	330	1100
27	7.88	0.18	63.5	330	1100
22	10.83	0.11	46.1	330	1100

5.7 IH/IHA REDUCTOR - 500 RPM

IHA42

Mn_2 [Nm]	i	Pn_1 [kW]	n2 [rpm]	Fr1 [N]	Fr2 [N]
151	5.38	1.50	93.0	330	3253
151	6.52	1.23	76.7	409	3468
140	8.11	0.92	61.6	369	3730
161	10.94	0.79	45.7	424	4121
151	13.25	0.61	37.7	381	4300
151	16.49	0.49	30.3	398	4300
161	20.26	0.43	24.7	432	4300
167	24.55	0.36	20.4	422	4300
151	30.55	0.26	16.4	359	4300
161	35.44	0.24	14.1	457	4300
151	44.10	0.18	11.3	371	4300
124	48.75	0.14	10.3	416	4300
140	60.67	0.12	8.2	428	4300

IHA43

Mn_2 [Nm]	i	Pn_1 [kW]	n2 [rpm]	Fr1 [N]	Fr2 [N]
161	51.32	0.17	9.7	427	4300
161	59.65	0.15	8.4	426	4300
161	72.27	0.12	6.9	409	4300
161	89.94	0.10	5.6	398	4300
161	110.51	0.08	4.5	403	4300
161	133.88	0.07	3.7	409	4300
161	166.61	0.05	3.0	398	4300
161	193.30	0.05	2.6	427	4300
161	240.55	0.04	2.1	398	4300
161	279.07	0.03	1.8	427	4300
161	347.29	0.03	1.4	398	4300

IHA51

Mn_2 [Nm]	i	Pn_1 [kW]	n2 [rpm]	Fr1 [N]	Fr2 [N]
43	1.45	1.57	345.2	330	1987
43	2.94	0.77	169.8	330	2517
54	4.75	0.60	105.3	330	2952
54	5.45	0.52	91.7	330	3000
43	7.88	0.29	63.5	330	3000
27	10.83	0.13	46.1	330	3000

5.7 IH/IHA REDUCTOR - 500 RPM

IHA52

Mn_2 [Nm]	i	Pn_1 [kW]	n2 [rpm]	Fr1 [N]	Fr2 [N]
258	5.14	2.68	97.2	550	4006
258	6.22	2.22	80.4	682	4269
258	7.73	1.78	64.7	664	4589
323	9.64	1.79	51.9	827	4940
301	11.67	1.38	42.9	636	5264
301	14.50	1.11	34.5	664	5659
323	16.91	1.02	29.6	758	5957
312	20.46	0.81	24.4	659	6000
301	25.43	0.63	19.7	641	6000
323	29.89	0.58	16.7	752	6000
323	36.17	0.48	13.8	682	6000
301	44.95	0.36	11.1	620	6000
323	49.78	0.35	10.0	798	6000
312	61.87	0.27	8.1	642	6000

IHA53

Mn_2 [Nm]	i	Pn_1 [kW]	n2 [rpm]	Fr1 [N]	Fr2 [N]
323	49.80	0.35	10.0	330	6000
323	60.25	0.29	8.3	409	6000
323	74.88	0.24	6.7	398	6000
323	88.02	0.20	5.7	421	6000
323	111.61	0.16	4.5	390	6000
323	138.71	0.13	3.6	398	6000
323	163.05	0.11	3.1	421	6000
323	200.27	0.09	2.5	403	6000
323	235.41	0.07	2.1	421	6000
323	284.81	0.06	1.8	409	6000
323	353.98	0.05	1.4	398	6000

IHA61

Mn_2 [Nm]	i	Pn_1 [kW]	n2 [rpm]	Fr1 [N]	Fr2 [N]
97	1.33	3.84	375.0	550	2893
97	2.50	2.05	200.0	550	3568
118	4.38	1.43	114.0	550	4303
97	7.75	0.66	64.5	550	4500
75	10.67	0.37	46.9	550	4500

5.7 IH/IHA REDUCTOR - 500 RPM

IHA62

Mn_2 [Nm]	i	Pn_1 [kW]	n2 [rpm]	Fr1 [N]	Fr2 [N]
409	5.14	4.25	97.2	550	5913
409	6.22	3.51	80.4	682	6300
409	7.73	2.82	64.7	664	6774
495	9.64	2.74	51.9	801	7291
473	11.67	2.17	42.9	652	7769
452	14.50	1.66	34.5	634	8000
538	16.91	1.70	29.6	842	8000
495	20.46	1.29	24.4	627	8000
462	25.43	0.97	19.7	621	8000
484	29.89	0.87	16.7	734	8000
505	36.17	0.75	13.8	712	8000
473	44.95	0.56	11.1	621	8000
398	49.78	0.43	10.0	626	8000
473	61.87	0.41	8.1	789	8000

IHA63

Mn_2 [Nm]	i	Pn_1 [kW]	n2 [rpm]	Fr1 [N]	Fr2 [N]
516	49.80	0.57	10.0	330	8000
516	60.25	0.47	8.3	409	8000
516	74.88	0.38	6.7	398	8000
516	88.02	0.32	5.7	421	8000
516	111.61	0.25	4.5	390	8000
516	138.71	0.20	3.6	398	8000
516	163.05	0.17	3.1	421	8000
516	200.27	0.14	2.5	403	8000
516	235.41	0.12	2.1	421	8000
516	284.81	0.10	1.8	409	8000
516	353.98	0.08	1.4	398	8000

IH032

Mn_2 [Nm]	i	Pn_1 [kW]	n2 [rpm]	Fr1 [N]	Fr2 [N]
102	4.70	1.16	106.5	647	4553
113	6.23	0.97	80.3	773	4995
134	7.76	0.93	64.4	801	5241
140	8.87	0.84	56.4	855	5486
151	10.14	0.79	49.3	888	5500
156	11.76	0.71	42.5	943	5500
183	13.72	0.71	36.4	940	5500
183	14.66	0.67	34.1	970	5500
204	16.77	0.65	29.8	980	5500
215	18.20	0.63	27.5	993	5500

5.7 IH/IHA REDUCTOR - 500 RPM

IH032

Mn_2 [Nm]	i	Pn_1 [kW]	n2 [rpm]	Fr1 [N]	Fr2 [N]
215	19.90	0.58	25.1	1028	5500
215	22.68	0.51	22.1	1074	5500
215	23.83	0.48	21.0	1090	5500
215	26.39	0.44	18.9	1120	5500
215	29.70	0.39	16.8	1152	5500
215	32.89	0.35	15.2	1176	5500
215	37.92	0.30	13.2	1207	5500
215	41.40	0.28	12.1	1223	5500
215	47.25	0.24	10.6	1245	5500

IH033

Mn_2 [Nm]	i	Pn_1 [kW]	n2 [rpm]	Fr1 [N]	Fr2 [N]
215	53.59	0.22	9.3	1264	5500
215	66.78	0.18	7.5	1292	5500
215	74.84	0.16	6.7	1304	5500
215	99.27	0.12	5.0	1328	5500
215	108.05	0.11	4.6	1335	5500
215	123.71	0.09	4.0	1343	5500
215	143.33	0.08	3.5	1352	5500
215	178.61	0.07	2.8	1362	5500
215	197.17	0.06	2.5	1366	5500
215	245.70	0.05	2.0	1373	5500

IH041

Mn_2 [Nm]	i	Pn_1 [kW]	n2 [rpm]	Fr1 [N]	Fr2 [N]
27	1.44	0.99	347.8	968	874
27	2.00	0.71	250.0	1081	990
32	2.55	0.67	196.4	1097	1000
32	2.71	0.63	184.2	1114	1000
43	3.11	0.73	161.0	1072	1000
48	3.59	0.71	139.3	1080	1000
48	4.20	0.61	119.0	1122	1000
48	5.00	0.51	100.0	1162	1000
54	5.50	0.52	90.9	1160	1000
54	6.09	0.47	82.1	1180	1000
54	7.67	0.37	65.2	1219	1000
59	8.75	0.36	57.1	1224	1000

5.7 IH/IHA REDUCTOR - 500 RPM

IH042

Mn_2 [Nm]	i	Pn_1 [kW]	n2 [rpm]	Fr1 [N]	Fr2 [N]
172	5.46	1.68	91.5	359	5916
172	7.19	1.28	69.6	616	6600
226	8.91	1.35	56.1	568	6600
258	10.31	1.34	48.5	579	6600
269	11.80	1.22	42.4	655	6600
269	13.57	1.06	36.8	756	6600
269	15.96	0.90	31.3	857	6600
269	19.00	0.76	26.3	948	6600
269	21.00	0.68	23.8	994	6600
280	23.15	0.65	21.6	1018	6600
280	26.04	0.57	19.2	1064	6600
301	27.50	0.59	18.2	1057	6600
301	30.45	0.53	16.4	1093	6600
301	34.10	0.47	14.7	1129	6600
301	37.76	0.43	13.2	1158	6600
301	43.75	0.37	11.4	1195	6600
301	47.53	0.34	10.5	1213	6600
301	54.25	0.30	9.2	1240	6600

IH043

Mn_2 [Nm]	i	Pn_1 [kW]	n2 [rpm]	Fr1 [N]	Fr2 [N]
323	61.83	0.28	8.1	1251	6600
323	76.67	0.23	6.5	1286	6600
323	87.05	0.20	5.7	1303	6600
323	114.55	0.15	4.4	1333	6600
323	125.69	0.14	4.0	1341	6600
323	142.04	0.12	3.5	1351	6600
323	165.38	0.11	3.0	1362	6600
323	205.07	0.09	2.4	1375	6600
323	227.50	0.08	2.2	1380	6600
323	282.10	0.06	1.8	1390	6600

IH051

Mn_2 [Nm]	i	Pn_1 [kW]	n2 [rpm]	Fr1 [N]	Fr2 [N]
43	1.27	1.79	392.9	783	2148
65	1.42	2.40	352.3	572	2141
65	2.13	1.61	235.3	845	2490
75	2.57	1.55	194.4	865	2500
86	3.17	1.44	157.9	903	2500
97	3.69	1.39	135.6	919	2500
97	4.00	1.28	125.0	956	2500

5.7 IH/IHA REDUCTOR - 500 RPM

IH051

Mn_2 [Nm]	i	Pn_1 [kW]	n2 [rpm]	Fr1 [N]	Fr2 [N]
102	4.77	1.13	104.8	1006	2500
108	5.25	1.08	95.2	1023	2500
108	5.82	0.98	85.9	1060	2500
108	7.33	0.78	68.2	1128	2500
108	8.38	0.68	59.7	1161	2500

IH052

Mn_2 [Nm]	i	Pn_1 [kW]	n2 [rpm]	Fr1 [N]	Fr2 [N]
280	5.73	2.61	87.3	174	7357
312	6.89	2.42	72.5	264	7730
366	8.53	2.29	58.6	323	8000
398	9.56	2.22	52.3	355	8000
419	11.51	1.95	43.4	485	8000
462	14.24	1.74	35.1	584	8000
484	16.59	1.56	30.1	667	8000
495	18.00	1.47	27.8	709	8000
495	19.97	1.32	25.0	777	8000
505	21.67	1.25	23.1	813	8000
505	24.71	1.09	20.2	885	8000
527	26.18	1.08	19.1	894	8000
527	28.44	0.99	17.6	934	8000
527	31.52	0.89	15.9	979	8000
527	33.00	0.85	15.2	998	8000
527	38.98	0.72	12.8	1059	8000
527	45.36	0.62	11.0	1107	8000
527	49.13	0.57	10.2	1129	8000
527	56.11	0.50	8.9	1163	8000

IH053

Mn_2 [Nm]	i	Pn_1 [kW]	n2 [rpm]	Fr1 [N]	Fr2 [N]
538	58.81	0.50	8.5	1169	8000
538	72.75	0.40	6.9	1213	8000
538	90.51	0.32	5.5	1249	8000
538	108.95	0.27	4.6	1275	8000
538	134.76	0.22	3.7	1298	8000
538	157.29	0.19	3.2	1313	8000
538	194.56	0.15	2.6	1329	8000
538	216.38	0.14	2.3	1336	8000
538	267.65	0.11	1.9	1348	8000

5.7 IH/IHA REDUCTOR - 500 RPM

IH061

Mn_2 [Nm]	i	Pn_1 [kW]	n2 [rpm]	Fr1 [N]	Fr2 [N]
86	1.34	3.39	372.1	2028	3258
129	2.13	3.21	235.3	2077	3632
129	2.57	2.65	194.4	2233	3700
140	3.17	2.34	157.9	2322	3700
161	3.69	2.31	135.6	2328	3700
161	4.00	2.13	125.0	2379	3700
172	4.77	1.91	104.8	2442	3700
183	5.25	1.84	95.2	2460	3700
183	5.82	1.66	85.9	2511	3700
183	7.33	1.32	68.2	2607	3700
183	8.38	1.15	59.7	2653	3700

IH062

Mn_2 [Nm]	i	Pn_1 [kW]	n2 [rpm]	Fr1 [N]	Fr2 [N]
538	5.38	5.35	93.0	703	11929
591	5.93	5.33	84.2	712	12000
591	7.39	4.28	67.7	1131	12000
645	8.50	4.06	58.8	1219	12000
645	9.39	3.67	53.3	1372	12000
699	11.69	3.20	42.8	1563	12000
753	12.67	3.18	39.5	1571	12000
753	14.75	2.73	33.9	1751	12000
860	16.29	2.82	30.7	1713	12000
892	17.67	2.70	28.3	1762	12000
914	20.28	2.41	24.6	1878	12000
914	23.27	2.10	21.5	2002	12000
914	25.70	1.90	19.5	2081	12000
860	29.33	1.57	17.1	2215	12000
914	32.00	1.53	15.6	2231	12000
860	36.99	1.24	13.5	2345	12000
914	40.33	1.21	12.4	2357	12000
914	46.06	1.06	10.8	2417	12000

IH063

Mn_2 [Nm]	i	Pn_1 [kW]	n2 [rpm]	Fr1 [N]	Fr2 [N]
914	49.45	1.01	10.1	2447	12000
914	54.61	0.91	9.2	2484	12000
914	68.00	0.73	7.3	2554	12000
914	85.82	0.58	5.8	2614	12000
914	94.76	0.53	5.3	2635	12000
914	118.00	0.42	4.2	2676	12000

5.7 IH/IHA REDUCTOR - 500 RPM

IH063

Mn_2 [Nm]	i	Pn_1 [kW]	n2 [rpm]	Fr1 [N]	Fr2 [N]
914	135.40	0.37	3.7	2697	12000
914	149.51	0.33	3.3	2711	12000
914	170.67	0.29	2.9	2727	12000
914	186.18	0.27	2.7	2737	12000
914	215.21	0.23	2.3	2751	12000
914	234.67	0.21	2.1	2758	12000
914	268.00	0.19	1.9	2769	12000

IH081

Mn_2 [Nm]	i	Pn_1 [kW]	n2 [rpm]	Fr1 [N]	Fr2 [N]
215	1.30	8.77	385.4	764	3534
237	1.43	8.76	350.0	766	3591
247	1.93	6.78	258.9	1281	4000
301	2.54	6.27	196.7	1413	4000
333	3.25	5.43	153.8	1631	4000
333	3.72	4.74	134.3	1810	4000
344	4.00	4.55	125.0	1858	4000
344	4.67	3.90	107.1	2027	4000
355	5.54	3.39	90.3	2160	4000
366	6.08	3.18	82.2	2214	4000
376	7.50	2.65	66.7	2350	4000
376	8.44	2.36	59.2	2427	4000

IH082

Mn_2 [Nm]	i	Pn_1 [kW]	n2 [rpm]	Fr1 [N]	Fr2 [N]
753	5.39	7.47	92.8	651	14821
753	5.95	6.77	84.1	872	15430
860	7.39	6.22	67.6	1045	16361
860	8.02	5.73	62.3	1198	16918
968	8.85	5.84	56.5	1163	17122
1183	11.01	5.74	45.4	1195	17763
1505	13.50	5.96	37.0	1126	17920
1613	14.90	5.79	33.6	1181	18000
1613	16.62	5.19	30.1	1370	18000
1613	18.53	4.65	27.0	1539	18000
1720	19.38	4.74	25.8	1510	18000
1720	21.39	4.30	23.4	1651	18000
1720	22.80	4.03	21.9	1735	18000
1720	26.60	3.46	18.8	1917	18000
1720	27.88	3.30	17.9	1967	18000
1720	31.15	2.95	16.1	2076	18000

5.7 IH/IHA REDUCTOR - 500 RPM

IH082

Mn_2 [Nm]	i	Pn_1 [kW]	n2 [rpm]	Fr1 [N]	Fr2 [N]
1720	34.38	2.68	14.6	2164	18000
1720	38.70	2.38	12.9	2258	18000
1720	42.75	2.15	11.7	2329	18000
1720	48.13	1.91	10.4	2405	18000

IH083

Mn_2 [Nm]	i	Pn_1 [kW]	n2 [rpm]	Fr1 [N]	Fr2 [N]
1720	56.53	1.66	8.8	2494	18000
1935	71.48	1.48	7.0	2551	18000
1935	78.87	1.34	6.3	2594	18000
1935	85.56	1.24	5.8	2626	18000
1935	98.09	1.08	5.1	2675	18000
1935	112.78	0.94	4.4	2718	18000
1935	124.44	0.85	4.0	2746	18000
1935	142.15	0.74	3.5	2778	18000
1935	154.76	0.68	3.2	2797	18000
1935	162.35	0.65	3.1	2807	18000
1935	179.13	0.59	2.8	2826	18000
1935	195.07	0.54	2.6	2841	18000
1935	222.78	0.47	2.2	2861	18000

IH101

Mn_2 [Nm]	i	Pn_1 [kW]	n2 [rpm]	Fr1 [N]	Fr2 [N]
430	1.29	17.60	386.8	1655	4325
484	1.41	18.15	354.6	1583	4348
484	2.03	12.60	246.0	2312	5000
591	2.48	12.61	201.5	2310	5000
645	3.27	10.43	152.8	2596	5000
645	3.70	9.22	135.1	2754	5000
656	4.22	8.22	118.4	2886	5000
667	4.88	7.23	102.6	3015	5000
667	5.27	6.70	94.9	3086	5000
688	6.23	5.84	80.2	3198	5000
699	7.55	4.90	66.3	3321	5000
699	8.40	4.40	59.5	3387	5000

IH102

Mn_2 [Nm]	i	Pn_1 [kW]	n2 [rpm]	Fr1 [N]	Fr2 [N]
1935	5.26	19.66	95.0	1554	16910

5.7 IH/IHA REDUCTOR - 500 RPM

IH102

Mn_2 [Nm]	i	Pn_1 [kW]	n2 [rpm]	Fr1 [N]	Fr2 [N]
2150	6.36	18.09	78.7	1757	17669
2473	7.05	18.75	70.9	1671	17355
2688	8.27	17.37	60.4	1850	18004
3010	9.99	16.11	50.0	2012	18611
3225	11.09	15.56	45.1	2083	18853
3333	13.32	13.37	37.5	2365	20412
3440	16.09	11.43	31.1	2616	22000
3440	17.85	10.30	28.0	2761	22000
3440	19.85	9.27	25.2	2895	22000
3440	21.44	8.58	23.3	2984	22000
3548	23.97	7.91	20.9	3070	22000
3548	25.89	7.33	19.3	3146	22000
3548	28.73	6.60	17.4	3239	22000
3440	30.72	5.99	16.3	3319	22000
3440	34.20	5.38	14.6	3397	22000
3010	38.45	4.19	13.0	3551	22000
3548	41.30	4.59	12.1	3499	22000
3548	45.82	4.14	10.9	3557	22000
3548	51.52	3.68	9.7	3616	22000

IH103

Mn_2 [Nm]	i	Pn_1 [kW]	n2 [rpm]	Fr1 [N]	Fr2 [N]
3763	55.47	3.70	9.0	3623	22000
3763	69.69	2.95	7.2	3719	22000
3763	79.82	2.57	6.3	3766	22000
3763	84.16	2.44	5.9	3783	22000
3763	93.36	2.20	5.4	3813	22000
3763	100.07	2.05	5.0	3832	22000
3763	120.84	1.70	4.1	3877	22000
3763	134.06	1.53	3.7	3898	22000
3763	143.42	1.43	3.5	3910	22000
3763	160.82	1.28	3.1	3930	22000
3763	181.07	1.13	2.8	3948	22000
3763	194.21	1.06	2.6	3958	22000
3763	215.45	0.95	2.3	3971	22000
3870	242.59	0.87	2.1	3981	22000

IH121

Mn_2 [Nm]	i	Pn_1 [kW]	n2 [rpm]	Fr1 [N]	Fr2 [N]
699	1.23	30.04	406.2	639	5232
753	1.42	28.11	352.9	851	5437

5.7 IH/IHA REDUCTOR - 500 RPM

IH121

Mn_2 [Nm]	i	Pn_1 [kW]	n2 [rpm]	Fr1 [N]	Fr2 [N]
753	1.81	22.04	276.8	1516	6000
806	2.00	21.33	250.0	1594	6000
860	2.48	18.35	201.6	1921	6000
860	2.95	15.40	169.2	2244	6000
882	3.14	14.84	159.1	2305	6000
914	3.58	13.51	139.7	2451	6000
914	4.12	11.74	121.4	2645	6000
935	4.80	10.31	104.2	2802	6000
946	5.21	9.60	95.9	2880	6000
968	6.25	8.19	80.0	3035	6000
1075	7.70	7.39	64.9	3123	6000

IH122

Mn_2 [Nm]	i	Pn_1 [kW]	n2 [rpm]	Fr1 [N]	Fr2 [N]
3225	5.27	32.69	94.8	534	24467
3440	5.78	31.85	86.6	624	24843
3870	7.05	29.35	70.9	891	25926
3978	7.74	27.47	64.6	1092	26799
4085	8.48	25.77	59.0	1274	27668
4300	10.35	22.22	48.3	1653	29780
4730	12.66	19.97	39.5	1894	30000
4945	13.86	19.07	36.1	1990	30000
5160	16.92	16.30	29.6	2286	30000
5375	19.32	14.87	25.9	2439	30000
5375	20.57	13.97	24.3	2536	30000
5375	22.52	12.76	22.2	2665	30000
5375	24.47	11.75	20.4	2773	30000
5375	27.49	10.45	18.2	2912	30000
5375	29.86	9.62	16.7	3000	30000
5375	33.00	8.71	15.2	3098	30000
5375	36.13	7.95	13.8	3179	30000
5375	44.10	6.52	11.3	3332	30000

IH123

Mn_2 [Nm]	i	Pn_1 [kW]	n2 [rpm]	Fr1 [N]	Fr2 [N]
5375	45.77	6.41	10.9	3358	30000
5375	55.87	5.25	8.9	3479	30000
5375	67.32	4.36	7.4	3573	30000
5375	73.71	3.98	6.8	3612	30000
5375	83.34	3.52	6.0	3660	30000
5375	89.97	3.26	5.6	3688	30000

5.7 IH/IHA REDUCTOR - 500 RPM

IH123

Mn_2 [Nm]	i	Pn_1 [kW]	n2 [rpm]	Fr1 [N]	Fr2 [N]
5375	100.29	2.93	5.0	3723	30000
5375	108.34	2.71	4.6	3746	30000
5375	118.62	2.47	4.2	3770	30000
5375	128.18	2.29	3.9	3789	30000
5375	144.79	2.03	3.5	3817	30000
5375	155.22	1.89	3.2	3831	30000
5375	172.80	1.70	2.9	3851	30000
5375	189.19	1.55	2.6	3867	30000
5375	207.43	1.41	2.4	3881	30000
5375	230.92	1.27	2.2	3896	30000

IH142

Mn_2 [Nm]	i	Pn_1 [kW]	n2 [rpm]	Fr1 [N]	Fr2 [N]
4945	5.27	50.13	94.8	4695	31484
5268	6.36	44.32	78.7	5370	33486
5375	7.04	40.80	71.0	5778	34880
5698	7.84	38.84	63.8	6007	35776
6988	9.45	39.54	52.9	5926	35303
7740	10.47	39.52	47.7	5928	35010
7848	13.07	32.10	38.2	6790	39149
8385	15.75	28.47	31.8	7212	41556
8493	17.45	26.01	28.6	7497	43556
8600	20.04	22.94	24.9	7854	46487
8600	24.15	19.04	20.7	8307	51117
8600	26.76	17.18	18.7	8523	53795
8600	32.24	14.26	15.5	8863	55000
8600	38.85	11.84	12.9	9145	55000
8600	43.05	10.68	11.6	9279	55000

IH143

Mn_2 [Nm]	i	Pn_1 [kW]	n2 [rpm]	Fr1 [N]	Fr2 [N]
8600	48.35	9.71	10.3	9415	55000
8600	53.53	8.77	9.3	9522	55000
8600	59.22	7.93	8.4	9618	55000
8600	62.99	7.46	7.9	9672	55000
8600	71.35	6.58	7.0	9771	55000
8600	79.07	5.94	6.3	9844	55000
8600	86.43	5.43	5.8	9902	55000
8600	96.21	4.88	5.2	9964	55000
8600	104.51	4.49	4.8	10009	55000
8600	115.92	4.05	4.3	10059	55000

5.7 IH/IHA REDUCTOR - 500 RPM

IH143

Mn_2 [Nm]	i	Pn_1 [kW]	n2 [rpm]	Fr1 [N]	Fr2 [N]
8600	128.47	3.66	3.9	10104	55000
8600	139.55	3.37	3.6	10137	55000
8600	154.33	3.04	3.2	10174	55000
8600	185.96	2.53	2.7	10232	55000
8600	206.08	2.28	2.4	10260	55000

6.1 CONDICIONES DE VENTA

Todos los suministros efectuados por Motovario se rigen exclusivamente por las condiciones generales de venta que se pueden encontrar en nuestra página web:

http://www.motovario.com/spa/empresa/condiciones-de-venta