TECHNICAL CATALOGUE

H SERIES

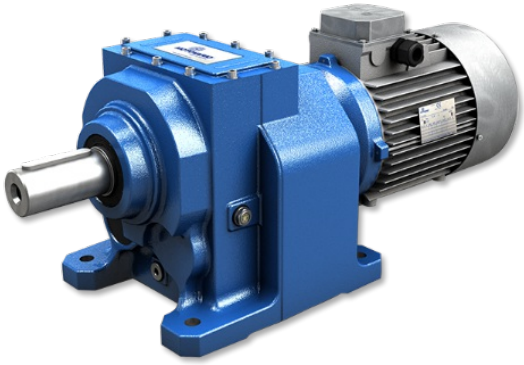

HELICAL GEARED MOTORS

MOTOVARIO®
HEART OF MOTION
a TECO Group company

1. GENERAL INFORMATION

1.1 SYMBOLS AND FORMULAS 4
1.1.1 Symbols 4
1.1.2 Formulas 5
1.2 PRODUCT SELECTION 7
1.3 SERVICE FACTOR 8
1.4 INSTALLATION 9

2. PRODUCT INFORMATION

2.1 DESIGN FEATURES 10
2.2 TYPOLOGY 11
2.2.1 Designation 11
2.2.2 Versions 12
2.2.3 Modularity 14
2.3 MOUNTING POSITIONS 16
2.3.1 Mounting positions 16
2.3.2 Position of terminal box 17
2.4 THERMAL POWER 18
2.4.1 Information 18
2.4.2 Verification 19
2.5 CRITICAL APPLICATIONS 20
2.5.1 Critical applications 20
2.5.2 Information 20
2.6 MOTOR FLANGE AVAILABILITY 21
2.6.1 HA Motor flange availability 21
2.6.2 H Motor flange availability 22
2.7 OUTPUT SHAFT BEARINGS 26
2.8 OVERHUNG LOAD 27
2.8.1 Information 27
2.8.2 Input 27
2.8.3 Output 28
2.9 LUBRICATION 29
2.9.1 Information 29

2.9.2 Lubricants 29
2.9.3 Special lubricants 30
2.9.4 Quantity 31

2.10 MOMENTS OF INERTIA 32

3. DIMENSIONS

3.1 REDUCERS/GEARED MOTORS 33
3.1.1 HA31 33
3.1.2 HA.1 34
3.1.3 CHA.1 35
3.1.4 IHA.1 36
3.1.5 HA.2 37
3.1.6 CHA.2 38
3.1.7 IHA.2 39
3.1.8 HA.3 40
3.1.9 CHA.3 41
3.1.10 IHA.3 42
3.1.11 H..1 43
3.1.12 CH..1 45
3.1.13 IH..1 47
3.1.14 H..2/3 49
3.1.15 CH..2/3 51
3.1.16 IH..2/3 53

3.2 ELECTRIC MOTORS 55
3.2.1 Electric motors 55
3.2.2 Nominal power - [HP] 57

3.3 WEIGHT 58

4. ACCESSORIES AND OPTIONS

4.1 BACKSTOP DEVICE 60

4.2 REINFORCED OIL SEALS FOR OUTPUT SHAFT 61

5. PERFORMANCES

5.1 H/HA GEARED MOTORS 62

5.2 IH/IHA GEAR REDUCER - fs=1, 1750 rpm 101

5.3 IH/IHA GEAR REDUCER - fs=1, 1140 rpm 112

5.4 IH/IHA GEAR REDUCER - fs=1, 875 rpm 123

6. SALES CONDITIONS

6.1 SALES CONDITIONS 134

1.1 SYMBOLS AND FORMULAS

1.1.1 Symbols

Physical dimension	Symbol	Symbol units of measure	Input	Output
Power	P	[HP]	P_1	P_2
Requested power	Pr	[HP]	Pr_1	Pr_2
Nominal power	Pn	[HP]	Pn_1	Pn_2
Torque	M	[in-lb]	M_1	M_2
Nominal torque	Mn	[in-lb]		Mn_2
Requested torque	Mr	[in-lb]	Mr_1	Mr_2
Speed	n	[rpm]	n_1	n_2
Load	F	[lb]		
Radial load	Fr	[lb]	Fr_1	Fr_2
Radial axial	Fa	[lb]	Fa_1	Fa_2
Reduction ratio	i			
Dynamic efficiency	η_d			
Speed	ips	[inch/second]		
Service factor	f.s.			
Static	s			
Dynamic	d			
Calculated	c			
Maximum	max			
Minimum	min			
Moment of inertia	J	[lb*in2]	J_1	
Ambient temperature	T_{amb}	[°F]		
Dimensions		[inch]		

1.1.2 Formulas

REDUCER		
Starting or stopping time	$t= v / a$	[s]
Velocity in rotary motion	$v= \pi * d * n / 60$ $v= \omega * r$	[m/s]
Speed velocity Angular velocity	$n= 60 * v / (\pi * d)$ $\omega= v / r$	[rpm] [rad/s]
Acceleration or deceleration according to a starting / stopping time	$a= v / t$	[m/s^2]
Angular acceleration	$\alpha= n / (9,55 * t)$ $\alpha= \omega / t$	[rad/s^2]
Starting or stopping distance (according to acceleration / deceleration or angular velocity)	$s= a * t^2 / 2$ $s= v * t /2$	[m]
Horizontal translation force	$F= \mu * m * g$	[N]
Vertical translation force (lifting)	$F= m * g$	
Inclined plane translation force	$F= m * g (\mu * \cos\beta + \mathrm{sen}\beta)$	
m= mass [kg]; g= gravity acceleration [m/s^2]; μ= friction coefficent; β= angle of inclination		
Moment of inertia	$J= m * v^2 / \omega^2$	[kgm^2]
Torque	$M= F * d / 2$ $M= J * \omega / t$	[Nm]

MOTOR and GEARMOTOR		
Starting time	$ta= (Jext+Jm)*n_n/9,55+(M_{peak}-Mr)$	[s]
Braking time	$ts= (Jext+Jm)*n_n/9,55+(M_{peak}+Mr)$	[s]
Motor rotation angle during starting	$\varphi= n_n * ta / 19,1$	[rad]
Motor rotation angle during braking	$\varphi= n_n * ts / 19,1$	[rad]
Power available at the shaft of single phase motor	$P= V * I * \eta *\cos\omega$	[W]
Power available at the shaft of three phase motor	$P= 1,73 * V * I * \eta * \cos\omega$	[W]

RUNNING at 60Hz		
Speed velocity at 60Hz	$n_{60Hz}= 1,2 * n_{50Hz}$	[rpm]
Power at 60Hz	$P1_{60Hz}= P1_{50Hz} * V_{60Hz}/V_{50Hz}$	[kW]
If input voltage at 60 Hz (V_{60Hz}) corresponds to winding voltage at 50 Hz (V_{50Hz}), power doesn't change $P1_{60Hz}= P1_{50Hz}$ If input voltage at 60 Hz (V_{60Hz}) is 20% higher than winding voltage at 50 Hz (V_{50Hz}), power increases by 20% $P1_{60Hz}= 1,2\ P1_{50Hz}$		
Torque at 60Hz	$M_{60hz}= M_{50Hz} * P1_{60Hz} / (1,2 * P1_{50Hz})$	[Nm]
Service factor at 60Hz	$f.s_{60Hz}= f.s_{50Hz} * 1,175 * P1_{50Hz} / P1_{60Hz}$	-

1.1 SYMBOLS AND FORMULAS

UNIT CONVERSION TABLE				
Description	Imperial units	International System of Units (SI)	Technical System (metric)	
Lenght, Distance	1 inch 1 foot	[in] = 0.0254 [ft] = 0.3048	meter	[m]
Mass	1 pound 1 ounce	[lb] = 0.4536 [oz] = 0.0283	kilogram	[kg]
Volume	US liquid gallon	[gal] =3.7854	liter	[l]
Temperature	Farenheit degree	[°F] = 1.8 * °C + 32	Celsius degree	[°C]
Force	1 pound-force	$[lb_{(f)}]$ = 4.4482 $[lb_{(f)}]$ = 0.4536	newton kilogram force	[N] $[kg_{(f)}]$
Power	1 horse power	[hp] = 0.7457	kilowatt	[kW]
Torque, Work	1 pound-force inch 1 pound-force foot	$[lb_{(f)}\ in]$ = 0.1130 $[lb_{(f)}\ in]$ = 0.0115 $[lb_{(f)}\ ft]$ = 1.3560 $[lb_{(f)}\ ft]$ = 0.1383	newton meter, joule kilogram-force meter	[N m], [J] $[kg_{(f)}\ m]$
Pressure	1 pound-force per square inch (psi)	$[lb_{(f)}/in^2]$ = 0.0689	bar	[bar]
Moment of inertia	1 WK^2	$[lb_{(f)}\ ft^2]$ = 0.0421	kilogram square-meter	$[kg\ m^2]$

1.2 PRODUCT SELECTION

For correctly selecting a gear reducer or geared motor, several essential pieces of data are required:

A. The rotational input speed to the gear reducer **(n_1)** and the rotational output speed **(n_2).** Through these two values it is possible to calculate the reduction ratio **(i)** of the gear reducer using the following formula: **$i=n_1/n_2$**

B. The torque required by the application **(Mr_2)**.

The geared motor or gear reducer can be selected once this data is known.
This guide helps you to select the right product in just a few steps:

Geared motor selection

1. Determine the application's actual service factor **(s.f.)**. This parameter depends on the type of load of the powered machine, the number of starts per hour and the hours of operation (refer to the "Service factor" paragraph).
2. Calculate the input power **Pr_1** using the required torque value **Mr_2**, the speed **n_2** and dynamic efficiency value. **$Pr_1=(Mr_2*n_2)/(\mu_d*63.025)$**. The dynamic efficiency value depends on the type of gear reducer and on the number of gear reduction stages. (To calculate the efficiency value see its page).
3. Consult the geared motor performance tables and identify a normalised power value **Pn_1** exceeding the required power **Pr_1**, such that: **$Pn_1 \geq Pr_1$**
4. Once the suitable nominal power has been identified, select the geared motor capable of generating the rotational speed closest to the desired n_2 value and with service factor s.f. greater or equal to that required by the application.

In the geared motor selection tables the combinations include 2-pole, 4-pole and 6-pole motors powered at 50Hz.

Gear reducer selection

1. Determine the application's service factor **(s.f.)** (consult to the "Service factor" paragraph on its page).
2. Calculate the reduction ratio i from the requested output speed **n_2** and from the input speed **n_1. $i=n_1/n_2$**
3. Calculate the torque **Mc_2** for selecting the gear reducer through the torque required by the application **Mr_2** and the service factor s.f.: **$Mc_2=Mr_2*(f.s.)$**
4. Consult the Gear Reducer Performance tables looking for the reducer that, with the reduction ratio closer to the calculated one, has a nominal torque **Mn_2** so that: **$Mn_2 \geq Mc_2$**

Checks

Once the gear reducer or geared motor has been selected, the following checks should be performed:

A. **Thermal power**

The gear reducer's thermal power must be equal to or greater than the installed mechanical power, or the power required by the application according to the indications contained in the section (refer to the "Thermal power" paragraph).

B. **Maximum torque**

Generally, the maximum torque (peak instantaneous load) that can be applied to the gear reducer must not exceed 200% of the nominal torque **Mn_2** (ATEX - M_2max).

C. **Radial loads**

1. Verify that the radial loads acting on the input and/or output shafts are within with the values indicated in the catalogue. If they exceed these values, increase the size of the gear reducer or modify the external load capacity. During the checking phase, it is important to remember that the values indicated in the catalogue refer to loads acting on the mid-point of the shaft protrusion, therefore, if the load is applied to a different position, appropriate formulas must be used to calculate the admissible load in the desired position (refer to the "Radial loads" paragraph).
2. If accessory output shafts are present, make sure that the applied load is compatible with shaft size. If help is needed: contact MOTOVARIO TECHNICAL SERVICE.

D. If an electric motor is going to be fitted to the selected gear reducer, check for its applicability by referring to the configuration table (see paragraph "Configurations"). From IEC 180 motors, verify if necessary to support the motor with feet. In case of need please contact MOTOVARIO TECHNICAL SERVICE.

1.3 SERVICE FACTOR

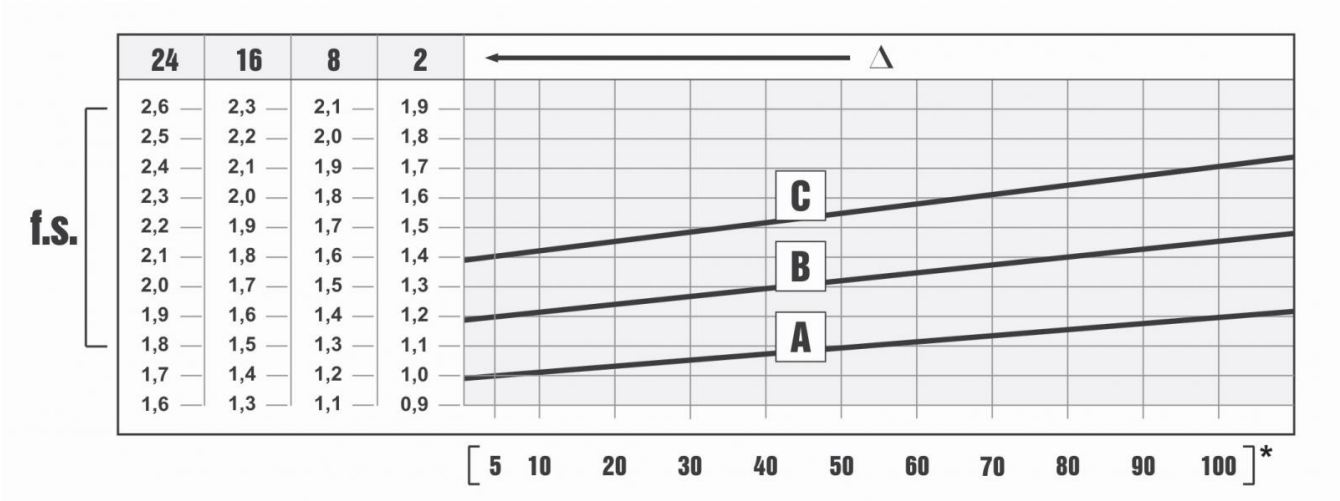

The service factor (f.s.) depends on the operating conditions the gear reducer is subjected to. The parameters that need to be taken into consideration to select the most adequate service factor correctly comprise:

- type of load of the operated machine : A - B - C
- length of daily operating time: hours/day (Δ)
- start-up frequency: starts/hour (*)

LOAD:

- **A** - uniform = fa ≤ 0,3
- **B** - moderate shocks = fa ≤ 3
- **C** - heavy shocks = fa ≤ 10

fa = Je/Jm

- Je [in-lb^2] moment of reduced external inertia at the drive-shaft
- Jm [in-lb^2] moment of inertia of motor

If fa > 10 call our Technical Service.

A. Screw feeders for light materials, fans, assembly lines, conveyor belts for light materials, small mixers, lifts, cleaning machines, fillers, control machines.
B. Winding devices, woodworking machine feeders, goods lifts, balancers, threading machines, medium mixers, conveyor belts for heavy materials, winches, sliding doors, fertilizer scrapers, packing machines, concrete mixers, crane mechanisms, milling cutters, folding machines, gear pumps.
C. Mixers for heavy materials, shears, presses, centrifuges, rotating supports, winches and lifts for heavy materials, grinding lathes, stone mills, bucket elevators, drilling machines, hammer mills, cam presses, folding machines, turntables, tumbling barrels, vibrators, shredders.

1.4 INSTALLATION

To install the gear reducer it is necessary to note the following recommendations:

- Check the correct direction of rotation of the gear reducer output shaft before fitting the unit to the machine.
- In the case of particularly lengthy periods of storage (4/6 months), if the oil seal is not immersed in the lubricant inside the unit, it is recommended to change it since the rubber could stick to the shaft or may even have lost the elasticity it needs to function properly.
- Whenever possible, protect the gear reducer against solar radiation and bad weather.
- Ensure the motor cools correctly by ensuring good passage of air from the fan side.
- In the case of ambient temperatures < 23°F or > 104°F call the Technical Service.
- The various parts (pulleys, gear wheels, couplings, shafts, etc.) must be mounted on the shafts using special threaded holes or other systems that anyhow ensure correct operation without risking damage to the bearings or external parts of the units. Lubricate the surfaces in contact to avoid seizure or oxidation.
- Painting must definitely not go over rubber parts and the holes on the breather plugs, if any.
- For units equipped with oil plugs, replace the closed plug used for shipping with the special breather plug.
- Check the correct level of the lubricant through the indicator, if there is one.
- Starting must take place gradually, without immediately applying the maximum load.
- When there are parts, objects or materials under the motor drive that can be damaged by even limited spillage of oil, special protection should be fitted.

Assembling motor on pam flange

When the unit is supplied without motor, it is necessary to follow these recommendation to ensure the correct assembly of the electric motor. Check that the tolerances for the motor shaft and flange correspond to the “standard”. Carefully clean the shaft, spigot and surfaces of the flange removing traces of paint and dirt, and confirm the key is fitted correctly. Fit the half coupling/sleeve to the motor shaft (see picture) taking care to ensure the motor shaft and bearings are not damaged by avoiding excessive force and where necessary using assembly equipment. Place the couplings elastic element onto the motor half coupling and position the motor up to the gear unit ensuring the coupling element is aligned with the driven half coupling. Complete the assembly using the fixing bolts. Key-ways with tightened tolerances.

Flexible joint

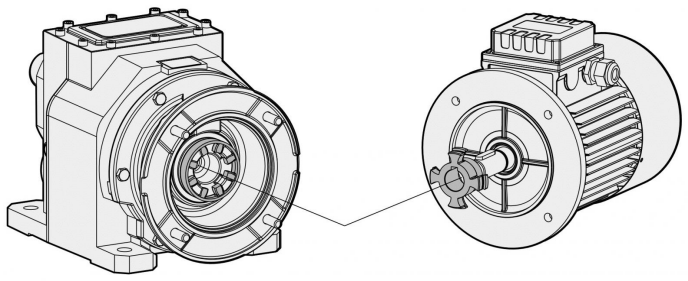

PAM Sleeve

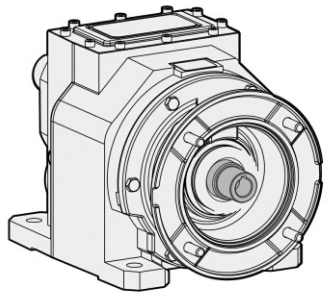

2.1 DESIGN FEATURES

Motovario products are supplied with the following surface treatment features:

Die-cast aluminium alloy cases for gears
Die-cast materials undergo the following surface cleaning operations:
- De-burring by means of a mechanically operated shearing system.
- Accurate shot-peening.
- Painting.
- Washing and passivation.

Grey-coloured cast-iron cases for gears
- Die-cast materials are always painted.

Painting specifications:
- Orange-peel blue epoxy-polyester RAL 5010. Polyester resin based heat-hardening powders, altered with epoxy resins.

Mechanical properties
- Tests carried out onto degreased Unichim white lattens film thickness: 2.5 mils comply with the following specifications: adherence (ISO2409).

Heat resistance
- 24 HOURS AT 302°F.

Corrosion strength
- ASTM B 117/97 salt fog from 100 to 500 hours depending on the support's preliminary treatment.

Performance:
- Loading capacity in accordance with DIN 3990, ISO 6336, AGMA 2101, ISO 10300, DIN 3991, ISO 281, DIN 743.

Dynamic efficiency η_d:
- The operating efficiency is the ratio between the output power P_2 and the power absorbed by thegear reducer P_1: $\eta_d = P_2/P_1$.

H/HA-range helical gear reducers have an average value equal to:
H..1 stages = 0,97
H..2 stages = 0,96
H..3 stages = 0,94

2.2 TYPOLOGY

2.2.1 Designation

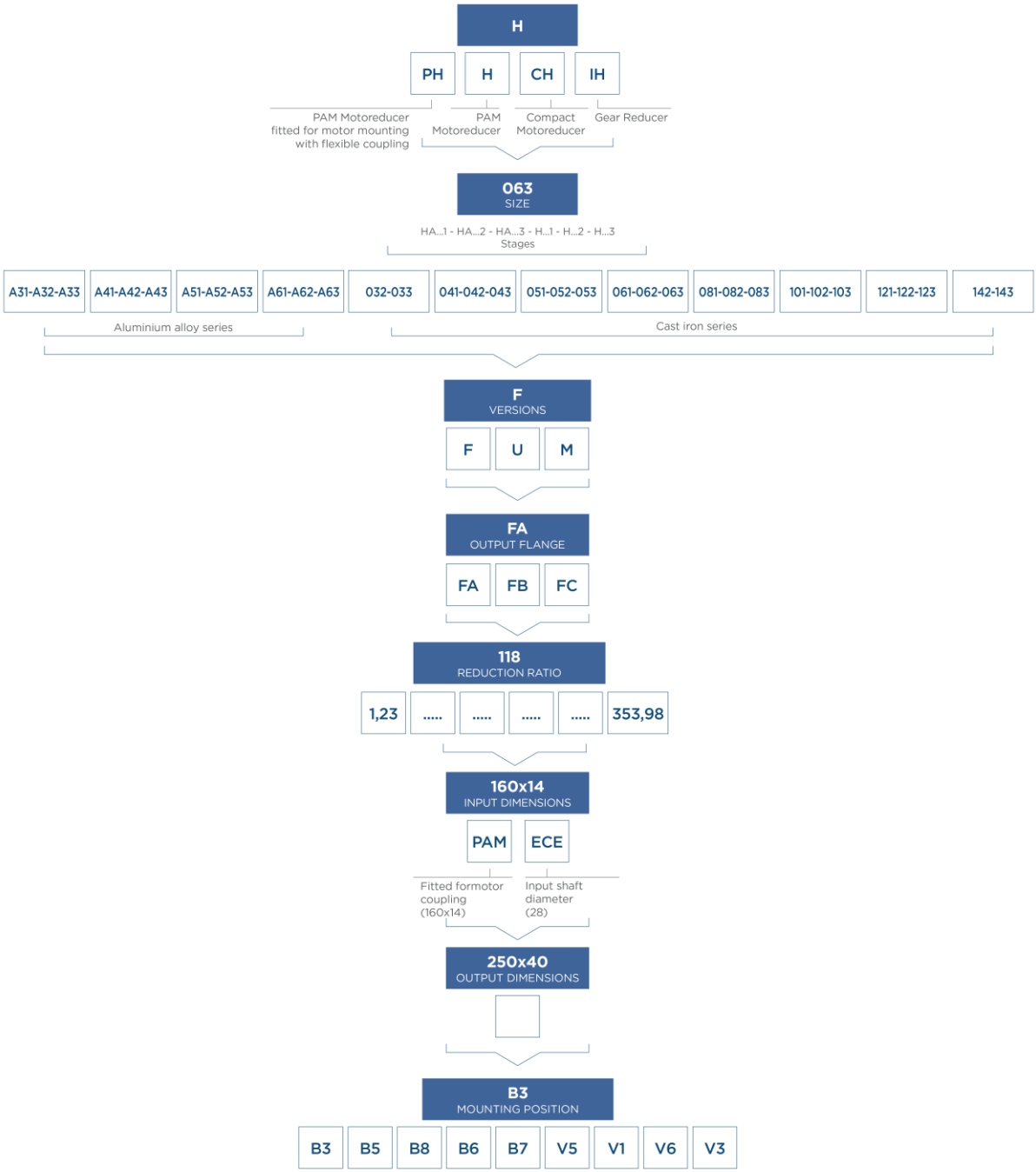

2.2.2 Versions

A30 - A40 - A50 - A60

SINGLE STAGE

CASING WITH FOOT

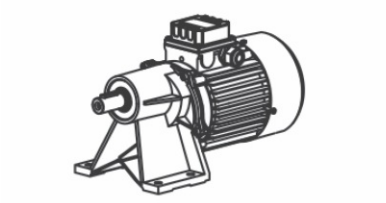

F CASING WITH FLANGE

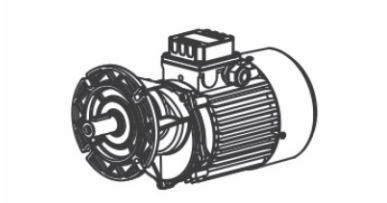

A31 CASING WITH FLANGE

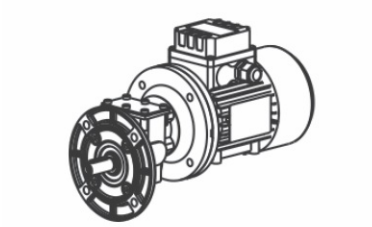

DOUBLE AND TRIPLE STAGE

CASING WITH FOOT

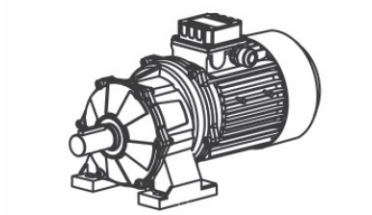

F CASING WITH FLANGE

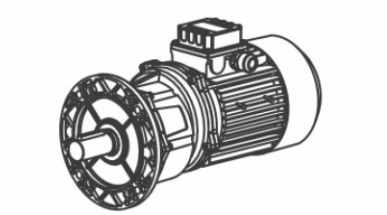

U CASING UNIVERSAL

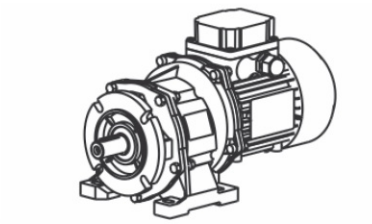

2.2 TYPOLOGY

030 - 040 - 050 - 060 - 080 - 100 - 120 - 140

SINGLE STAGE

CASING WITH FOOT

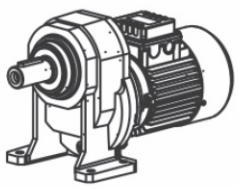

F CASING WITH FLANGE

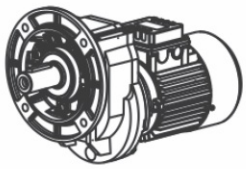

U CASING UNIVERSAL

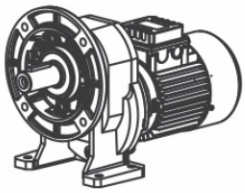

M CASING MONO

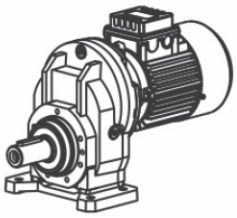

DOUBLE AND TRIPLE STAGE

CASING WITH FOOT

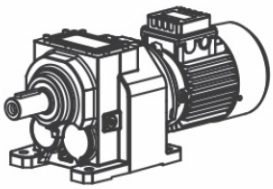

F CASING WITH FLANGE

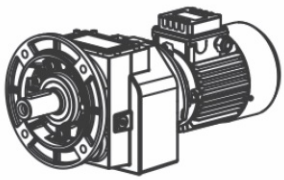

U CASING UNIVERSAL

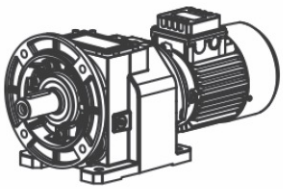

2.2.3 Modularity

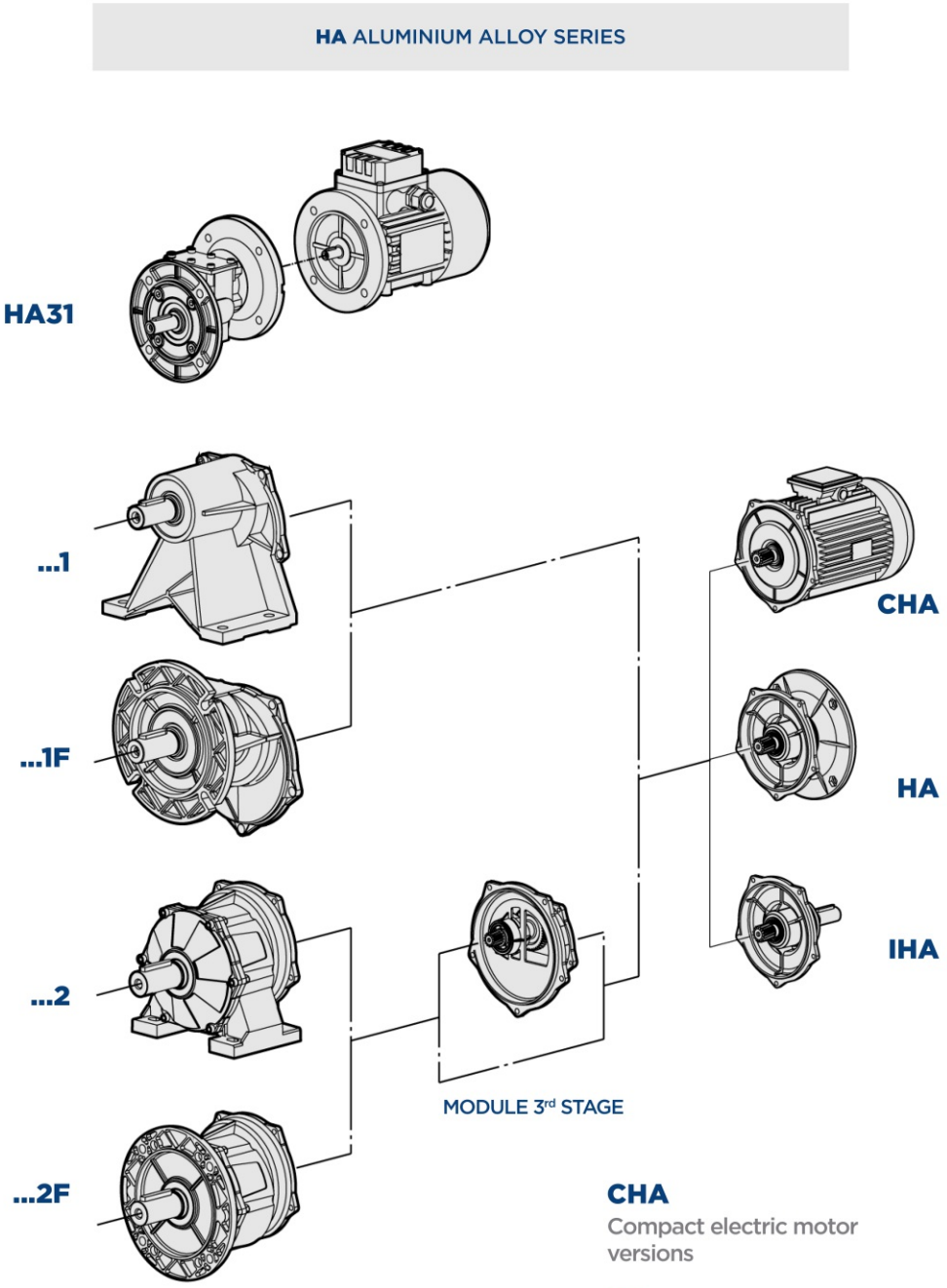

CHA
Compact electric motor versions

HA
Fitted for motor coupling version (PAM)

IHA
Input shaft versions

2.2 TYPOLOGY

H GREY CAST IRON SERIES

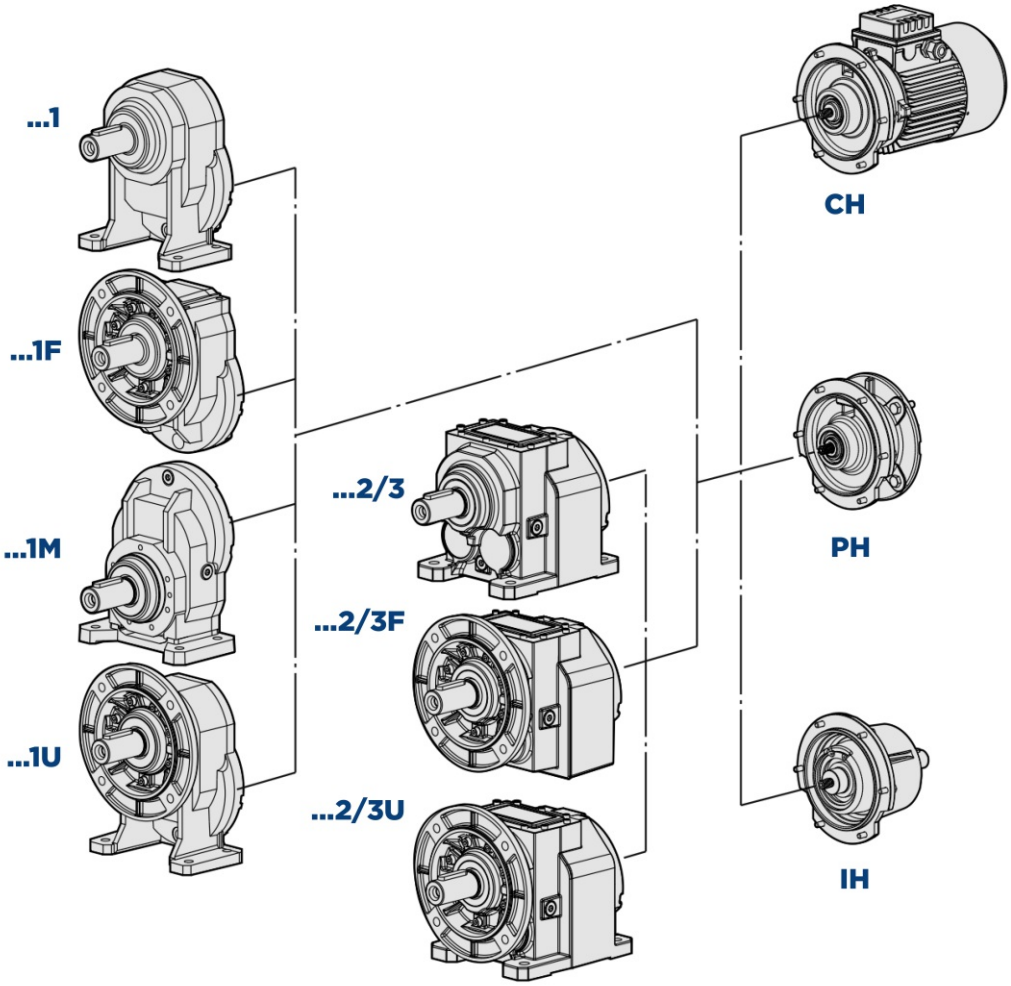

CH
Compact electric motor versions

PH
Fitted for motor mounting with flexible coupling

IH
Input shaft versions

2.3.1 Mounting positions

The mounting position of the gear unit identifies its space orientation. B3 mounting position, as from a technical point of view, ensures lower oil splash, better lubrication and less heating.

HA1T - H1T	HA1F - H1F
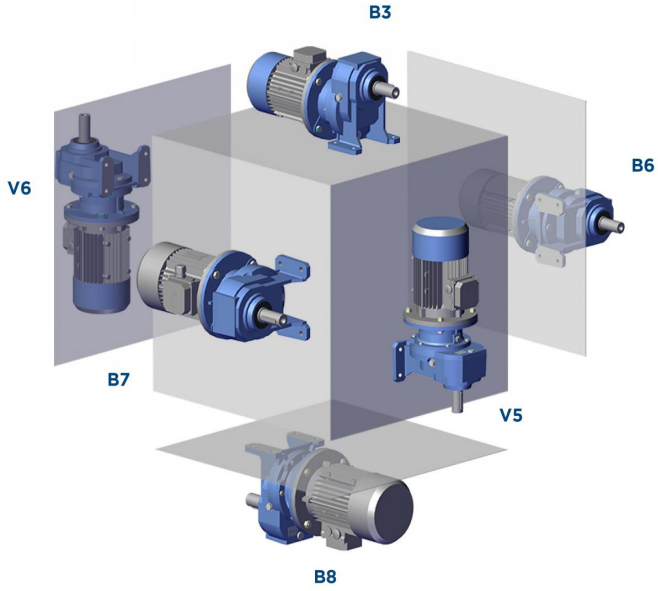	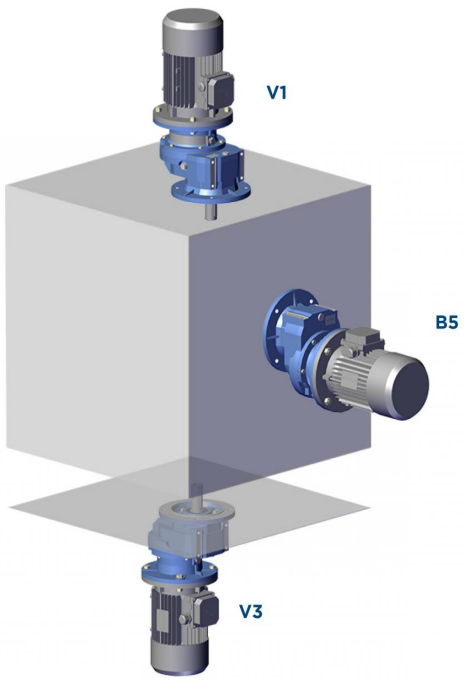
H1M	
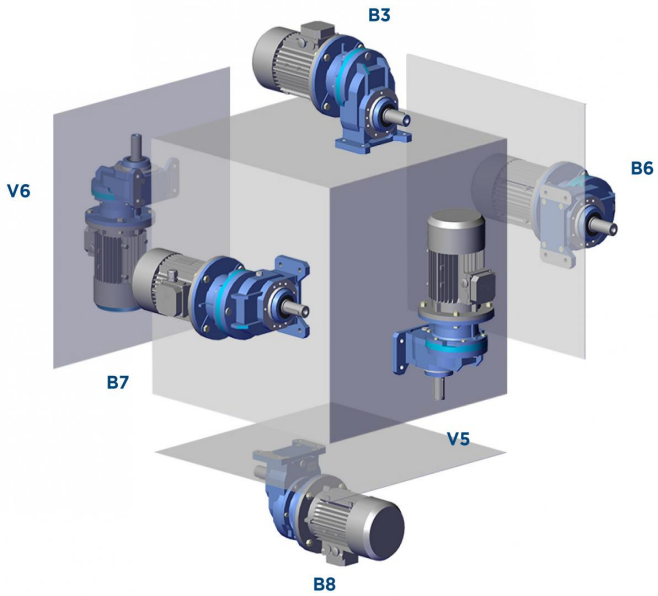	

2.3 MOUNTING POSITIONS

HA2/3T - H2/3T	HA2/3F - H2/3F
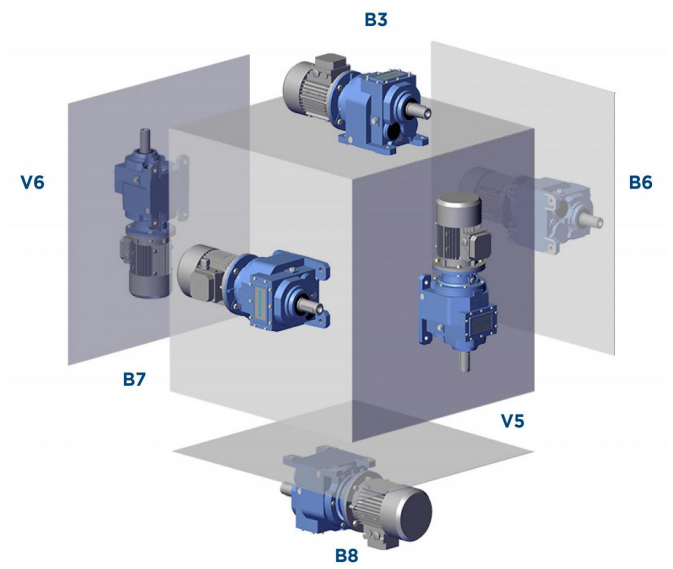	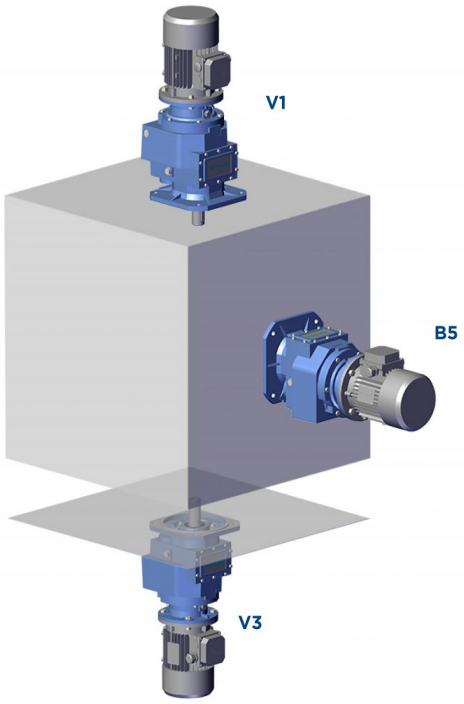

2.3.2 Position of terminal box

Unless otherwise specified when ordering, the gear reducer is supplied with terminal box in position 1.

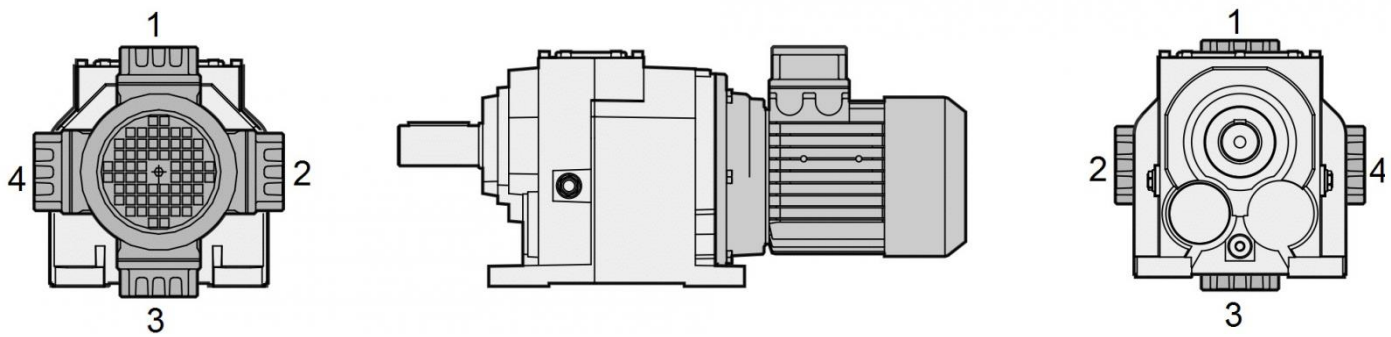

2.4 THERMAL POWER

2.4.1 Information

The scheme below indicates the nominal thermal power Pth capacity [HP] according to the following conditions:

- mounting position B3
- continuous operation at input speed <= 1800 rpm
- environment temperature 77°F
- sea level altitude
- air speed around the gear reducer >=38ips
- absence of external radial and/or axial loads

n_1 = 1,750rpm			
	Pth [HP]		Pth [HP]
HA31	/	H081	27
HA41	6,5	H101	38
HA51	9,4	H121	50
HA61	18	H032	5,6
HA32	5,5	H042	8
HA42	7,5	H052	9
HA52	12,5	H062	15
HA62	18,5	H082	24
H041	7,8	H102	36
H051	9,2	H122	42
H061	12	H142	50

A correct lubrication and a proper running condition of the gearbox are guaranteed only applying an input power not exceeding Pth (at the above reference conditions) (T oil max=203°F).

NOTE: Normally, three stages gearboxes do not require thermal power verification because the thermal rating usually exceed the mechanical one.

2.4.2 Verification

Application check

Except for continuous operating times below two (2) hours and successive pauses capable of bringing the gear reducer back to ambient temperature, for each application it is advisable to verify the gear reducer's thermal limit according to the following formula: **P_1 < Pth * Fc * Fv*Fa,** where:

- P_1 = input power to the gear reducer
- Pth = thermal power at the reference conditions (see above table)
- Fc = ambient and operating temperature correction factor
- Fv = ventilation correction factor
- Fa = altitude correction factor

The correction factors refer to different operating conditions compared to the reference conditions, and are provided by the following ISO14179 tables:

		Duty per hour of operation %				
	Fc	100	80	70	40	20
Ambient temperature °F	13,4	1,15	1,21	1,32	1,55	2,07
	24,1	1,07	1,12	1,23	1,44	1,93
	33,5	1,00	1,05	1,15	1,35	1,80
	40,2	0,93	0,98	1,07	1,26	1,67
	53,6	0,83	0,87	0,95	1,12	1,49
	57,7	0,75	0,79	0,86	1,01	1,35
	67,1	0,67	0,70	0,77	0,90	1,21

Altitude correction factor	Fa
0*	1
2460	0,95
4921	0,9
7382	0,85
9843	0,81

Ventilation correction factor	Fv
Stagnant air (<1,12 mph)	0.75
Indoor installation with slight ventilation	1
Indoor installation with good ventilation (>3,13 mph)	1.4
Installazione all'aperto (>8,3 mph)	1.9

*Sea level (ft)

In case of operation at input speeds exceeding 2000 rpm, or ambient temperatures greater than 104°F, it is advisable to contact out technical department.

2.5 CRITICAL APPLICATIONS

2.5.1 Critical applications

H	A31	A30	A40	A50	A60
V5 - V1: 1500 < n1 < 3000	✔	✔	✔	✔	✔
n1 > 3000	B	B	B	B	B
V3 - V6	B	B	B	B	B

H	030	040	050	060	080	100	125	140
V5 - V1: 1500 < n1 < 3000	✔	✔	✔	✔	✔	✔	B	B
n1 > 3000	B	B	B	B	B	B	A	A
V3 - V6	B	B	B	B	B	B	B	B

✔ Verified application
A Application not recommended
B Check the application and/or call our technical service

2.5.2 Information

The performance given in the catalogue correspond to mounting position B3 or similar, when the first stage is not entirely immersed in oil. For other mounting positions and/or particular input speeds, refer to the tables that highlight different critical situations for each size of gear reducer. It is also necessary to take due consideration of and carefully assess the following applications by calling our Technical Service:

- To avoid the use as multiplier.
- Use in services that could be hazardous for people if the gear reducer fails.
- Applications with especially high inertia.
- Use as a lifting winch.
- Applications with high dynamic strain on the case of the gear reducer.
- In places with T_{amb} under 23°F °C or over 104°F.
- Use in chemically aggressive environments.
- Use in a salty environment.
- Mounting positions not envisaged in the catalogue.
- Use in radioactive environments.
- Use in environments pressures other than atmospheric pressure.

Avoid applications where even partial immersion of the reducer is required.
In the presence of overloading due to full load, braking, shocks or other static and dynamic causes, please verify that the peak torque is less than $2*Mn_2$.

2.6 MOTOR FLANGE AVAILABILITY

2.6.1 HA Motor flange availability

B10 = Compact electric motor versions.

These tables report all possible dimensions. Please verify service factor.

	i	56C	140TC	180TC
H A32	5,38 ÷ 30,55	•	•	
H A32	35,44 ÷ 60,67	•		
H A33	51,32 ÷ 347,29	•		
H A41	1,45 ÷ 5,45	•	•	
H A41	7,88 ÷ 10,83	•		
H A42	5,38 ÷ 30,55	•	•	
H A42	35,44 ÷ 60,67	•		
H A43	51,32 ÷ 347,29	•		
H A51	1,45 ÷ 5,45	•	•	
H A51	7,88 ÷ 10,83	•		
H A52	5,14 ÷ 25,43	•	•	•
H A52	29,89 ÷ 61,87	•	•	
H A53	49,8 ÷ 163,05	•	•	
H A53	200,27 ÷ 353,98	•		
H A61	1,33 ÷ 4,38	•	•	•
H A61	7,75 ÷ 10,67	•	•	
H A62	5,14 ÷ 25,43	•	•	•
H A62	29,89 ÷ 61,87	•	•	
H A63	49,8 ÷ 163,05	•	•	
H A63	200,27 ÷ 353,98	•		

2.6.2 H Motor flange availability

These tables report all possible dimensions. Please verify service factor.

PH 032			
i	56C	140TC	180TC
4,70	•	•	•
6,23	•	•	•
7,76	•	•	•
8,87	•	•	•
10,14	•	•	•
11,76	•	•	•
13,72	•	•	•
14,66	•	•	•
16,77	•	•	•
18,20	•	•	•
19,90	•	•	
22,68	•	•	•
23,83	•	•	
26,39	•	•	
29,70	•	•	
32,89	•	•	
37,92	•	•	
41,40	•	•	
47,25	•	•	

CH - H - PH 033		
i	56C	140TC
53,59	•	•
66,78	•	•
74,84	•	•
99,27	•	•
108,05	•	
123,71	•	•
143,33	•	
178,61	•	
197,17	•	
245,70	•	

PH 041			
i	56C	140TC	180TC
1,44	•	•	•
2,00	•	•	•
2,55	•	•	•
2,71	•	•	•
3,11	•	•	•
3,59	•	•	•
4,20	•	•	•
5,00	•	•	
5,50	•	•	
6,09	•	•	
7,67	•	•	
8,75	•	•	

PH 042			
i	56C	140TC	180TC
5,46	•	•	•
7,19	•	•	•
8,91	•	•	•
10,31	•	•	•
11,80	•	•	•
13,57	•	•	•
15,96	•	•	•
19,00	•	•	•
21,00	•	•	•
23,15	•	•	
26,04	•	•	•
27,50	•	•	
30,45	•	•	
34,10	•	•	
37,76	•	•	
43,75	•	•	
47,53	•	•	
54,25	•	•	

PH 043		
i	56C	140TC
61,83	•	•
76,67	•	•
87,05	•	•
114,55	•	•
125,69	•	
142,04	•	•
165,38	•	
205,07	•	
227,50	•	
282,10	•	

2.6 MOTOR FLANGE AVAILABILITY

PH 051			
i	56C	140TC	180TC
1,27		•	•
1,42		•	•
2,13		•	•
2,57	•	•	•
3,17	•	•	•
3,69	•	•	•
4,00	•	•	•
4,77	•	•	•
5,25	•	•	•
5,82	•	•	•
7,33	•	•	
8,38	•	•	

PH 052			
i	56C	140TC	180TC
5,73	•	•	•
6,89	•	•	•
8,53	•	•	•
9,56	•	•	•
11,51	•	•	•
14,24	•	•	•
16,59	•	•	•
18,00	•	•	•
19,97	•	•	•
21,67	•	•	•
24,71	•	•	•
26,18	•	•	•
28,44	•	•	•
31,52	•	•	•
33,00	•	•	
38,98	•	•	•
45,36	•	•	
49,13	•	•	
56,11	•	•	

PH 053		
i	56C	140TC
58,81	•	•
72,75	•	•
90,51	•	•
108,95	•	•
134,76	•	•
157,29	•	
194,56	•	
216,38	•	
267,65	•	

PH 061			
i	56C	140TC	180TC
1,34	•	•	•
2,13	•	•	•
2,57	•	•	•
3,17	•	•	•
3,69	•	•	•
4,00	•	•	•
4,77	•	•	•
5,25	•	•	•
5,82	•	•	•
7,33	•	•	•
8,38	•	•	•

PH 062				
i	56C	140TC	180TC	210TC
5,38	•	•	•	•
5,93	•	•	•	•
7,39	•	•	•	•
8,50	•	•	•	•
9,39	•	•	•	•
11,69	•	•	•	•
12,67	•	•	•	•
14,75	•	•	•	•
16,29	•	•	•	•
17,67	•	•	•	•
20,28	•	•	•	•
23,27	•	•	•	•
25,70	•	•	•	•
29,33	•	•	•	
32,00	•	•	•	•
36,99	•	•	•	
40,33	•	•	•	
46,06	•	•	•	

PH 063			
i	56C	140TC	180TC
49,45	•	•	•
54,61	•	•	•
68,00	•	•	•
85,82	•	•	•
94,76	•	•	•
118,00	•	•	•
135,40	•	•	•
149,51	•	•	•
170,67	•	•	
186,18	•	•	•
215,21	•	•	
234,67	•	•	
268,00	•	•	

2.6 MOTOR FLANGE AVAILABILITY

PH 081				
i	56C	140TC	180TC	210TC
1,30				•
1,43				•
1,93				•
2,54			•	•
3,25			•	•
3,72			•	•
4,00			•	•
4,67			•	•
5,54	•	•	•	•
6,08	•	•	•	•
7,50	•	•	•	•
8,44	•	•	•	•

PH 082					
i	56C	140TC	180TC	210TC	250TC
5,39				•	•
5,95				•	•
7,39				•	•
8,02				•	•
8,85				•	•
11,01				•	•
13,50			•	•	•
14,90			•	•	•
16,60			•	•	•
18,53			•	•	•
19,38			•	•	•
21,39			•	•	•
22,80			•	•	•
26,60			•	•	•
27,88	•	•	•	•	•
31,15	•	•	•	•	•
34,38	•	•	•	•	•
38,70	•	•	•	•	•
42,75	•	•	•	•	•
48,13	•	•	•	•	•

PH 083					
i	56C	140TC	180TC	210TC	250TC
56,53	•	•	•	•	•
71,48	•	•	•	•	•
78,87	•	•	•	•	•
85,60	•	•	•	•	•
98,09	•	•	•	•	•
112,78	•	•	•	•	•
124,44	•	•	•	•	•
142,15	•	•	•		
154,76	•	•	•	•	•
162,35	•	•			
179,13	•	•			
195,07	•	•			
222,78	•	•			

PH 101			
i	180TC	210TC	250TC
1,29		•	•
1,41		•	•
2,03		•	•
2,48		•	•
3,27	•	•	•
3,70	•	•	•
4,22		•	•
4,88	•	•	•
5,27	•	•	•
6,23	•	•	•
7,55	•	•	•
8,40	•	•	•

PH 102				
i	180TC	210TC	250TC	280TC
5,26		•	•	•
6,36		•	•	•
7,05		•	•	•
8,27		•	•	•
9,99		•	•	•
11,09		•	•	•
13,32	•	•	•	•
16,09	•	•	•	•
17,85	•	•	•	•
19,80	•	•	•	•
21,44	•	•	•	•
24,00	•	•	•	•
25,89	•	•	•	•
28,73	•	•	•	•
30,70	•	•	•	•
34,20	•	•	•	•
38,45	•	•	•	
41,30	•	•	•	•
45,82	•	•	•	•
51,52	•	•	•	

PH 103				
i	140TC	180TC	210TC	250TC
55,47			•	•
69,69		•	•	•
79,80		•	•	•
84,16		•	•	•
93,36		•	•	•
100,07		•	•	•
120,84		•	•	•
134,06		•	•	•
143,40	•	•	•	•
160,82	•	•	•	•
181,07	•	•	•	•
194,21	•	•	•	•
215,45	•	•	•	•
242,59	•	•	•	•

2.6 MOTOR FLANGE AVAILABILITY

PH 121			
i	210TC	250TC	320TC
1,23	•	•	•
1,42	•	•	•
1,81	•	•	•
2,00	•	•	•
2,48	•	•	•
2,95	•	•	•
3,14	•	•	•
3,58	•	•	•
4,12	•	•	•
4,80	•	•	•
5,21	•	•	•
6,25	•	•	•
7,70	•	•	•

PH 122				
i	210TC	250TC	280TC	320TC
5,27	•	•	•	•
5,78	•	•	•	•
7,05	•	•	•	•
7,74	•	•	•	•
8,48	•	•	•	•
10,35	•	•	•	•
12,66	•	•	•	•
13,86	•	•	•	•
16,92	•	•	•	•
19,30	•	•	•	•
20,57	•	•	•	•
22,52	•	•	•	•
24,47	•	•	•	
27,49	•	•	•	•
29,86	•	•	•	
33,00	•	•	•	
36,13	•	•	•	
44,10	•	•	•	

PH 123					
i	180TC	210TC	250TC	280TC	320TC
45,77		•	•	•	•
55,87		•	•	•	•
67,32	•	•	•	•	•
73,71	•	•	•	•	•
83,30	•	•	•	•	•
89,97	•	•	•	•	•
100,30	•	•	•	•	•
108,34	•	•	•	•	•
118,62	•	•	•	•	•
128,18	•	•	•	•	
144,79	•	•	•	•	•
155,22	•	•	•	•	
172,80	•	•	•	•	
189,19	•	•	•	•	
207,40	•	•	•	•	
230,92	•	•	•	•	
259,60	•	•	•		

PH 142					
i	210TC	250TC	280TC	320TC	360TC
5,27	•	•	•	•	•
6,36	•	•	•	•	•
7,04	•	•	•	•	•
7,84	•	•	•	•	•
9,45	•	•	•	•	•
10,47	•	•	•	•	•
13,07	•	•	•	•	•
15,75	•	•	•	•	•
17,45	•	•	•	•	•
20,04	•	•	•	•	•
24,15	•	•	•	•	•
26,76	•	•	•	•	•
32,24	•	•	•	•	•
38,85	•	•	•	•	•
43,05	•	•	•	•	•

PH 143						
i	180TC	210TC	250TC	280TC	320TC	360TC
48,35		•	•	•	•	•
53,50		•	•	•	•	•
59,22		•	•	•	•	•
63,00		•	•	•	•	•
71,35		•	•	•	•	•
79,07		•	•	•	•	•
86,40		•	•	•	•	•
96,21		•	•	•	•	•
104,51		•	•	•		
115,92		•	•	•	•	•
128,47		•	•	•	•	•
139,55		•	•	•		
154,33	•	•	•	•		
185,96	•	•	•	•		
206,08	•	•	•	•		

2.7 OUTPUT SHAFT BEARINGS

	HA30	HA40	HA50	HA60
	Standard	Standard	Standard	Standard
HA 1	1	1	1	1
HA 2/3	1	1	1	1

	H030	H040	H050	H060	H080	H100	H125	H140
	Standard	Standard	Standard	Standard	Standard	Standard	Standard	Standard
H 1/M	/	1	1	1	1	1	1	/
H 2/3	2	2	2	2	2	2	2	2

1 - Ball Bearing

2 - Roller bearings

/ - Not available

2.8 OVERHUNG LOAD

2.8.1 Information

The value of the admissible radial load [lb] is given in the tables relating to the performance of the gear reducer at issue. It is related to the load applied on the centre line of the shaft and in the most unfavourable conditions of angle of application and direction of rotation. The maximum admissible axial loads are 1/5 of the value of the given radial load when they are applied in combination with the radial load. The tables relating to the output shafts give the maximum admissible value. This value must never be exceeded since it relates to the strength of the case. Particular conditions of radial load higher than the limits of the catalogue may occur. In this case, call our Technical Sevice and provide details on the application: direction of the load, direction of rotation of the shaft, type of service. The radial load on the shaft is calculated with the following formula: **Fre=(2*M*fz)/D≤Fr1 or Fr2**

- **Fre** [lb] Resulting radial load
- **M** [lb-in] Torque on the shaft
- **D** [in] Diameter of the transmission member mounted on the shaft
- **Fr1**-**Fr2** [lb] Value of the maximum admitted radial load (see relative tables)
- **fz** = 1,1 gear pinion - 1,4 chain wheel - 1,7 v-pulley - 2,5 flat pulley

2.8.2 Input

When the radial load is not on the centre line of the shaft, it is necessary to adjust the admissible radial load Fr1 with the following formula: **Frx=(Fr1*a)/(b+x)**

- **a** , **b** = values given in the tables
- **x** = distance from the point of application of the load to the shaft shoulder

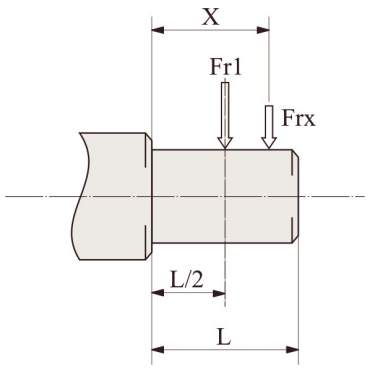

IH	A32/A33/A41/A42/A43/A51/A53/A63	A52/A61/A62
a	3,31	3,50
b	2,52	2,72
Fr1 max(**)	108	180

IH	041	051	061	081	101	121
a	4,13	4,13	4,13	5,39	6,89	6,89
b	3,15	3,15	3,15	4,25	5,31	5,31
Fr1 max(**)	297	405	495	562	674	674

IH	032/033	042/043	052/053	062/063	082/083	102/103	122/123	142/143
a	4,13	4,13	4,13	5,39	5,39	6,89	6,89	8,86
b	3,15	3,15	3,15	4,25	4,25	5,31	5,31	6,69
Fr1 max(**)	495	495	562	809	809	1619	1619	3372

(**Fr1 max) Max admissible value of the reducer in static conditions and/or for limited operations. For continuous overhung loads please check the values on the performances tables calculated according to the casing, the shaft and bearings.

2.8.3 Output

When the radial load is not on the centre line of the shaft, it is necessary to adjust the admissible radial load Fr2 with the following formula: **Frx=(Fr2*a)/(b+x)**

- **a** , **b** = values given in the tables
- **x** = distance from the point of application of the load to the shaft shoulder

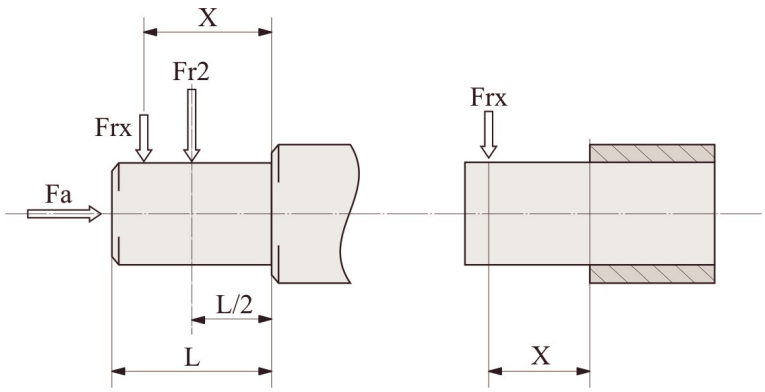

H	A31	A41	A51	A61	A32/A33	A42/A43	A52/A53	A62/A63
a	3,09	3,19	3,27	4,06	4,13	4,53	5,31	6,10
b	2,30	2,40	2,28	2,87	3,35	3,54	4,13	4,53
Fr2 max(**)	247	247	674	1012	450	967	1349	1798

H	041	051	061	081	101	121
a	3,50	3,86	4,53	5,94	8,27	9,13
b	3,11	2,87	3,35	4,37	6,10	6,97
Fr2 max(**)	225	562	832	899	1124	1349
Fa max (*)	1236	1461	1574	1911	2585	3035

H	032/033	042/043	052/053	062/063	082/083	102/103	122/123	142/143
a	4,72	5,43	6,65	7,68	9,37	11,06	13,03	14,45
b	3,78	4,25	5,28	6,10	7,40	8,70	10,28	11,10
Fr2 max(**)	1236	1484	1798	2698	4047	4946	6744	12365

(**Fr2 max) Max admissible value of the reducer in static conditions and/or for limited operations. For continuous overhung loads please check the values on the performances tables calculated according to the casing, the shaft and bearings.

(* Fa) Max. axial load admissible in only one direction with the use of a thrust bearing (on request).

2.9 LUBRICATION

2.9.1 Information

In cases of ambient temperatures not envisaged in the table, call our Technical Service. In the case of temperatures under -22°F or over 140°F it is necessary to use oil seals with special properties.
For operating ranges with temperatures under 32°F it is necessary to consider the following:

1. The motors need to be suitable for operation at the envisaged ambient temperature.
2. The power of the electric motor needs to be adequate for exceeding the higher starting torques required.
3. In case of cast-iron gear reducers, pay attention to impact loads since cast iron may have problems of fragility at temperatures under 5°F.
4. During the early stages of service, problems of lubrication may arise due to the high level of viscosity taken on by the oil and so it is wise to have a few minutes of rotation under no load.

Oil must be changed after approx. 10000 hours/2 years of operation; this time varies based on the type of service and on the environment inside which the gear reducer is installed. Units not featuring any oil plug are life-lubricated, and therefore maintenance-free.

2.9.2 Lubricants

Specifications of lubricants recommended by Motovario.
All units are supplied with ENI BLASIA 220 oil, unless otherwise specified by the client.

	HA32/3 ÷ A62/3 / H032/3 ÷ 142/3	
	Mineral oil	
T_{amb}°F ISO/SAE	(+23) ÷ (+104) ISO VG220	(+5) ÷ (+77) ISO VG150
ENI	BLASIA 220	BLASIA 150
SHELL	OMALA S2 G 220	OMALA S2 G 150
KLUBER	Kluberoil GEM 1-220N	Kluberoil GEM 1-150N
MOBIL	MOBILGEAR 600 XP220	MOBILGEAR 600 XP150
CASTROL	ALPHA SP 220	ALPHA SP 150
BP	ENERGOL GR-XP220	ENERGOL GR-XP150

2.9.3 Special lubricants

	T_{amb}°F	Polyglicol synthetic oil
ENI	(-22) ÷ (+86)	Blasia S 150 (ISO VG150)
	(-4) ÷ (+104)	Blasia S 220 (ISO VG220)
MOBIL	(-49) ÷ (+32)	SCH 624 (ISO VG32)
	(-40) ÷ (+41)	SCH 626 (ISO VG68)
KLUBER	(-40) ÷ (+41)	Klubersynth GH 6-32 (ISO VG32)
	(-31) ÷ 50)	Klubersynth GH 6-80 (ISO VG80)
	(-22) ÷ (+104)	Klubersynth GH 6-150 (ISO VG150)
	(-13) ÷ (+104)	Klubersynth GH 6-220 (ISO VG220)
	(+5) ÷ (+122)	Klubersynth GH 6-460 (ISO VG460)
	(+14 ÷ (+158)	Klubersynth GH 6-680 (ISO VG680)

	T_{amb}°F	Polyglicol synthetic oil for food grade
KLUBER	(-22) ÷ (+59)	Klubersynth UH1-6 100 (ISO VG100)
	(-13) ÷ (+104)	Klubersynth UH1-6 220 (ISO VG220)
	(+5) ÷ (+104)	Klubersynth UH1-6 320 (ISO VG320)
	(+5) ÷ (+122)	Klubersynth UH1-6 460 (ISO VG460)
	(+14) ÷ (+122)	Klubersynth UH1-6 680 (ISO VG680)

If ‘special’ lubricant is required please contact for Technical Assistance.

2.9.4 Quantity

- For the gear reducer HA series with 2, 3 stages and for the reducers H series with 1, 2, 3 stages it is always necessary to specify the envisaged position.
- The gear reducer HA series with 1, 2, 3 stages all sizes, H series ...with 1 stage sizes 040, 050, 060 and H series ... with 2, 3 stages sizes 030, 040, 050 are supplied complete with lubricant, have no oil plugs and need no maintenance.
- The gear reducer H series ... with 1 stage sizes 80,100,125 and with 2, 3 stages sizes 060, 080, 100, 125, 140 are supplied complete with lubricant and are fitted with oil plugs to suit any mounting position included in the catalogue.

Oil quantity in the table (litres ~) are indicative; for a proper use you will have to refer to the level plug or the dipstick. Any level difference could depend on construction tolerances, but also by the placement of the unit or by the mounting surface at the customer's premises. It is appropriate to check and, if necessary, restores the level when the units are installed.

H - CH	HA31	HA41	CHA41	A51	A61	A32	A42	A52	A62	A33	A43	A53	A63
B3-B5	0,07	0,23	0,13	0,25	0,62	0,68	0,7	1,2	1,9	1,1	1,16	1,9	2,4
B8													
B6-B7													
V5-V1								1,6	2,1			2,5	3,1
V6-V3													

H - CH	041	051	061	081	101	121	041M	051M	061M	081M	101M	121M
B3-B5	0,5	0,7	0,7	1,45	3,5	4,7	0,5	0,5	0,5	1,5	3,5	3,9
B8	0,5	0,5	0,5	1,5	3,5	3,9	0,5	0,7	0,7	1,45	3,5	4,7
B6-B7	0,5	0,7	0,7	1,5	3,5	4,1	0,5	0,7	0,7	1,5	3,5	4,1
V5-V1	0,5	0,7	0,9	1,5	3,5	4,7	0,5	0,7	0,9	1,5	3,5	4,7
V6-V3	0,5	0,7	0,7	1,5	3,5	4,1	0,5	0,7	0,7	1,5	3,5	4,1

H - CH	032/033	042/043	052/053	062/063	082/083	102/103	122/123	142/143
B3-B5	0,8	1,2	1,4	2,4	4,5	8,1	12,5	22,5
B8	0,85	1,2	1,4	3,1	5	8,9	12,5	20
B6-B7	1	1,2	1,8	3	4,6	8,4	12,1	22,5
V5-V1	1,3	1,75	2,15	3,9	7,6	12,7	20,5	30,5
V6-V3	1,2	1,7	2,1	4,4	7,5	14,2	21	38

2.10 MOMENTS OF INERTIA

The following values of J1 moment of inertia are only estimated, referred to the maximum calculated, and to the gearbox input side.

HA-1	J_1 [Kg*m2]	J_1 [lb*in2]
A31	0,0001	0,3313
A41	0,00005	0,1808
A51	0,00008	0,2818
A61	0,00042	1,4475

HA-2/3	J_1 [Kg*m2]	J_1 [lb*in2]
A32/A33	0,00005	0,1600
A42/A43	0,00005	0,1686
A52/A53	0,00026	0,8857
A62/A63	0,00032	1,0841

H-1	J_1 [Kg*m2]	J_1 [lb*in2]
041	0,00008	0,2901
051	0,00019	0,6522
061	0,00046	1,5685
081	0,0011	3,7625
101	0,00345	11,8013
121	0,00764	26,1080

H-2/3	J_1 [Kg*m2]	J_1 [lb*in2]
032/033	0,00007	0,2352
042/043	0,00007	0,2414
052/053	0,00009	0,3075
062/063	0,0002	0,6768
082/083	0,00068	2,3288
102/103	0,00106	3,6214
122/123	0,00282	9,6275
142/143	0,00442	15,1205

3.1.1 HA31

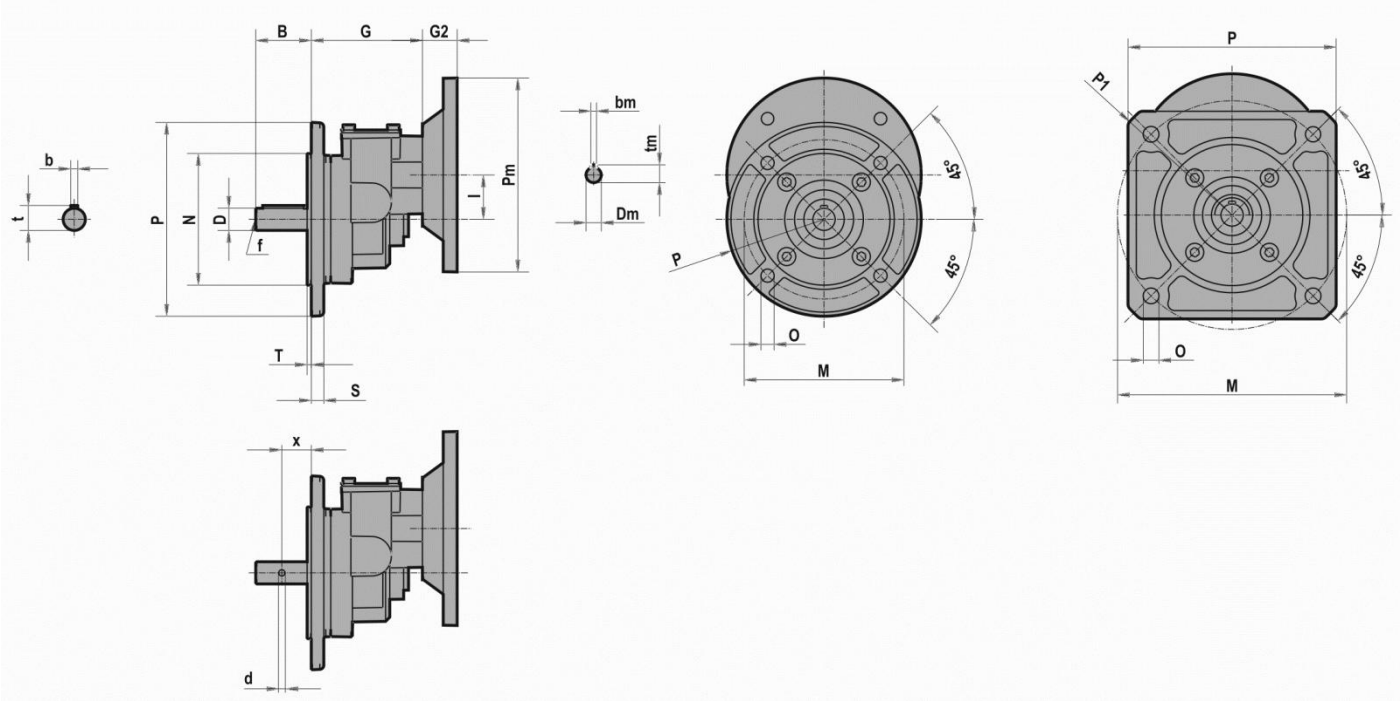

	D	B	b	t	x	d	f	G	l
HA31	0,43 +0,0003/-0,0001	0,91	0,16	0,49	-	-	-	3,15	1,26
	0,55 +0,0003/-0,0001	1,18	0,20	0,63	-	-	M6		
	0,63 +0,0003/-0,0001	1,57	0,20	0,71	-	-	M6		
	0,75 +0,0004/-0,0002	1,57	0,24	0,85	-	-	M6		
	0,63 +0,0003/-0,0001	1,97	-	-	1,14	0,28	-		
	0,75 0/-0,0079	2,36	-	-	1,46	0,26	-		
	0,78 +/-0,002	3,94	-	-	1,97	0,24	M8		
	0,79 +0,0004/-0,0002	2,95	-	-	1,77	0,24	-		

	P	P1	M	N - 0,0014/-0,0027	O	S	T
HA31	4,57	5,91	5,00	-	M8	-	-
	5,43	6,30	5,00	-	M8	-	-
	5,51	-	4,53	3,74	0,37	0,35	0,12
	5,91	7,87	6,50	-	0,43	-	-

IEC	Pm x Dm [mm]	G2
063	140x11	0,98
071	160x14	1,26
080	200x19	1,65

B5	Pm [mm]	Dm [mm]	bm [mm]	tm [mm]
063	140	11	4	12,8
071	160	14	5	16,3
080	200	19	6	21,8

3.1.2 HA.1

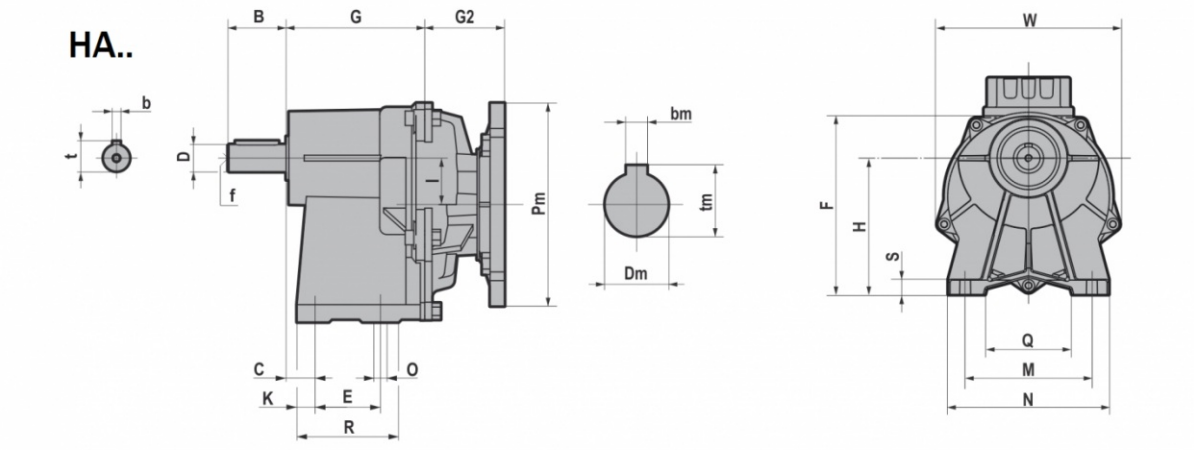

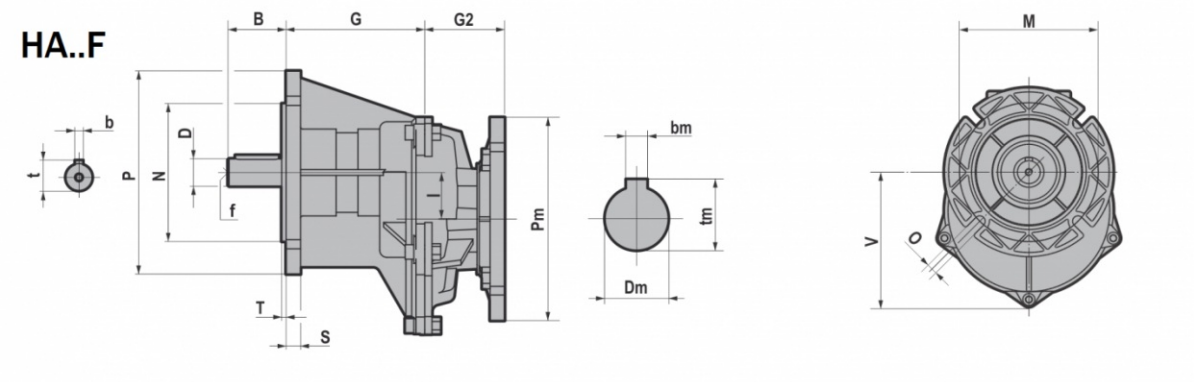

	D 0/-0,0005	B	C	E	F	G	H	I	K	M	N	O	Q	R	S	W	b	t	f
HA41/F	0,75	1,57	0,79	1,77	5,94	3,76	4,45	1,26	0,49	4,13	5,12	0,35	2,95	2,76	0,47	5,98	0,1875	0,83	1/4-20
HA51/F	1	1,97	0,24	2,76	6,65	4,09	5,12	1,26	0,59	5,91	7,09	0,43	4,53	3,94	0,47	5,98	0,25	1,11	3/8-16
HA61/F	1,25	2,36	0,3	2,76	8,64	5,08	6,5	1,87	0,79	6,5	7,87	0,43	4,72	4,33	0,59	8,58	0,25	1,36	1/2-13

	M	N	O	P	S	T	V
HA41F	4,53	3,74 -0,0014/-0,0035	0,35	5,51	0,39	0,12	4,39
HA51F	5,12	4,33 -0,0014/-0,0035	0,35	6,30	0,39	0,14	4,39
HA61F	6,5	5,12 -0,0017/-0,0042	0,43	7,87	0,59	0,14	6,36

		G2	
NEMA	Pm x Dm	HA41/F - HA51/F	HA61/F
56C	6,5"x0,625"	3,78	3,98
140TC	6,5"x0,875"	3,78	3,98
180TC	9"x1,125"	/	3,98

		G2	
NEMA	Pm x Dm	HA41/F - HA51/F	HA61/F
56C	6,5"x0,625"	3,78	3,98
140TC	6,5"x0,875"	3,78	3,98
180TC	9"x1,125"	/	3,98

NEMA	Pm	Dm	tm	bm
56C	6,69	0,625	0,71	0,1875
140TC	6,69	0,875	0,97	0,1875
180TC	9,06	1,125	1,24	0,2500

3.1.3 CHA.1

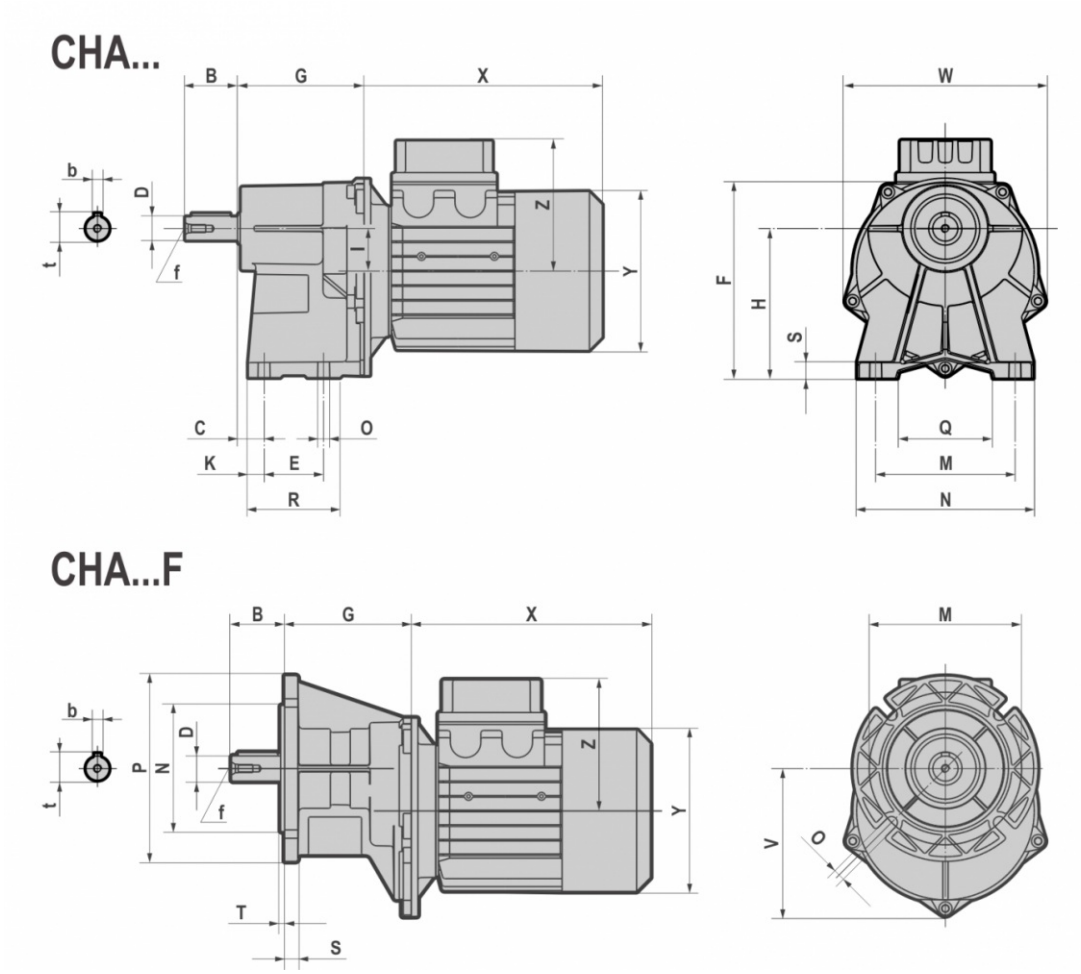

	D 0/-0,0005	B	C	E	F	G	H	I	K	M	N	O	Q	R	S	W	b	t	f
HA41/F	0,75	1,57	0,79	1,77	5,94	3,76	4,45	1,26	0,49	4,13	5,12	0,35	2,95	2,76	0,47	5,98	0,1875	0,83	1/4-20
HA51/F	1	1,97	0,24	2,76	6,65	4,09	5,12	1,26	0,59	5,91	7,09	0,43	4,53	3,94	0,47	5,98	0,25	1,11	3/8-16
HA61/F	1,25	2,36	0,3	2,76	8,64	5,08	6,5	1,87	0,79	6,5	7,87	0,43	4,72	4,33	0,59	8,58	0,25	1,36	1/2-13

	M	N	O	P	S	T	V
HA41F	4,53	3,74 -0,0014/-0,0035	0,35	5,51	0,39	0,12	4,39
HA51F	5,12	4,33 -0,0014/-0,0035	0,35	6,30	0,39	0,14	4,39
HA61F	6,5	5,12 -0,0017/-0,0042	0,43	7,87	0,59	0,14	6,36

		T (IE1 - IE2)						
		063	071	080	090S	090L	100	112
CHA41/F CHA51/F	X	7,09	8,07	8,78	9,13	10,12	/	/
	Y	4,76	5,47	6,22	6,81	6,81	/	/
	Z	4,09	4,41	4,80	5,12	5,12	/	/
CHA61/F	X	/	/	8,58	9,13	10,12	11,42	11,89
	Y	/	/	6,22	6,81	6,81	7,52	8,31
	Z	/	/	4,80	5,12	5,12	5,47	6,06

		TB (IE1 - IE2)						
		063	071	080	090S	090L	100	112
CHA41/F CHA51/F	X	9,37	10,67	11,57	12,17	13,15	/	/
	Y	4,76	5,47	6,22	6,81	6,81	/	/
	Z	4,69	5,08	5,39	6,18	6,18	/	/
CHA61/F	X	/	/	11,42	12,17	13,15	14,65	15,75
	Y	/	/	6,22	6,81	6,81	7,52	8,31
	Z	/	/	5,39	6,18	6,18	9,06	9,06

3.1.4 IHA.1

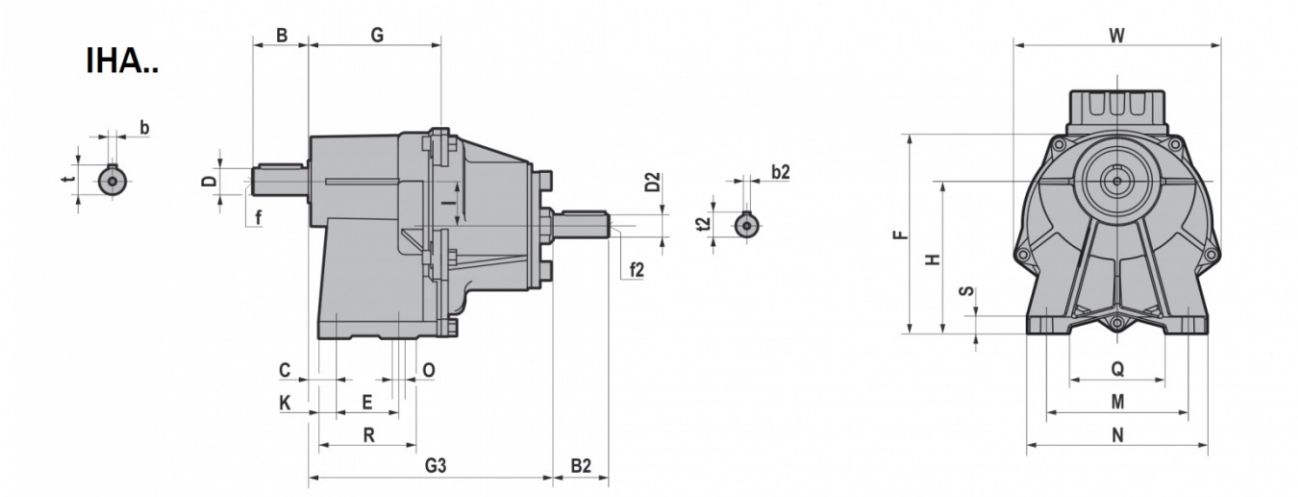

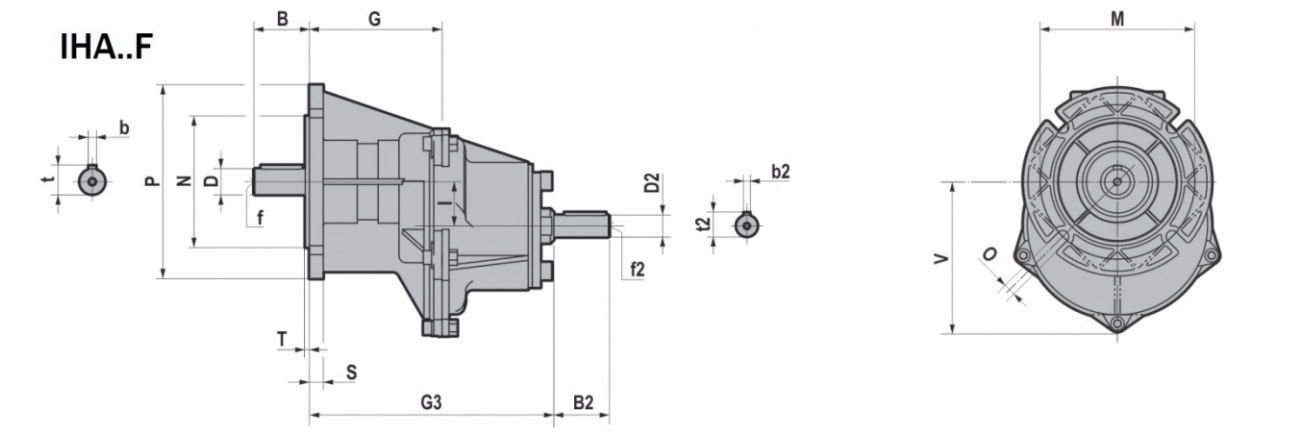

	D 0/-0,0005	B	C	E	F	G	H	I	K	M	N	O	Q	R	S	W	b	t	f
IHA41/F	0,75	1,57	0,79	1,77	5,94	3,76	4,45	1,26	0,49	4,13	5,12	0,35	2,95	2,76	0,47	5,98	0,1875	0,83	1/4-20
IHA51/F	1	1,97	0,24	2,76	6,65	4,09	5,12	1,26	0,59	5,91	7,09	0,43	4,53	3,94	0,47	5,98	0,25	1,11	3/8-16
IHA61/F	1,25	2,36	0,3	2,76	8,64	5,08	6,5	1,87	0,79	6,5	7,87	0,43	4,72	4,33	0,59	8,58	0,25	1,36	1/2-13

	M	N	O	P	S	T	V
IHA41F	4,53	3,74 -0,0014/-0,0035	0,35	5,51	0,39	0,12	4,39
IHA51F	5,12	4,33 -0,0014/-0,0035	0,35	6,30	0,39	0,14	4,39
IHA61F	6,5	5,12 -0,0017/-0,0042	0,43	7,87	0,59	0,14	6,36

	G3	D2 0/-0,0005	B2	b2	f2	t2
IHA41/F	6,93	0,75	1,57	0,19	1/4-20	0,83
IHA51/F	7,26	0,75	1,57	0,19	1/4-20	0,83
IHA61/F	8,23	0,875	1,97	0,19	1/4-20	0,96

3.1.5 HA.2

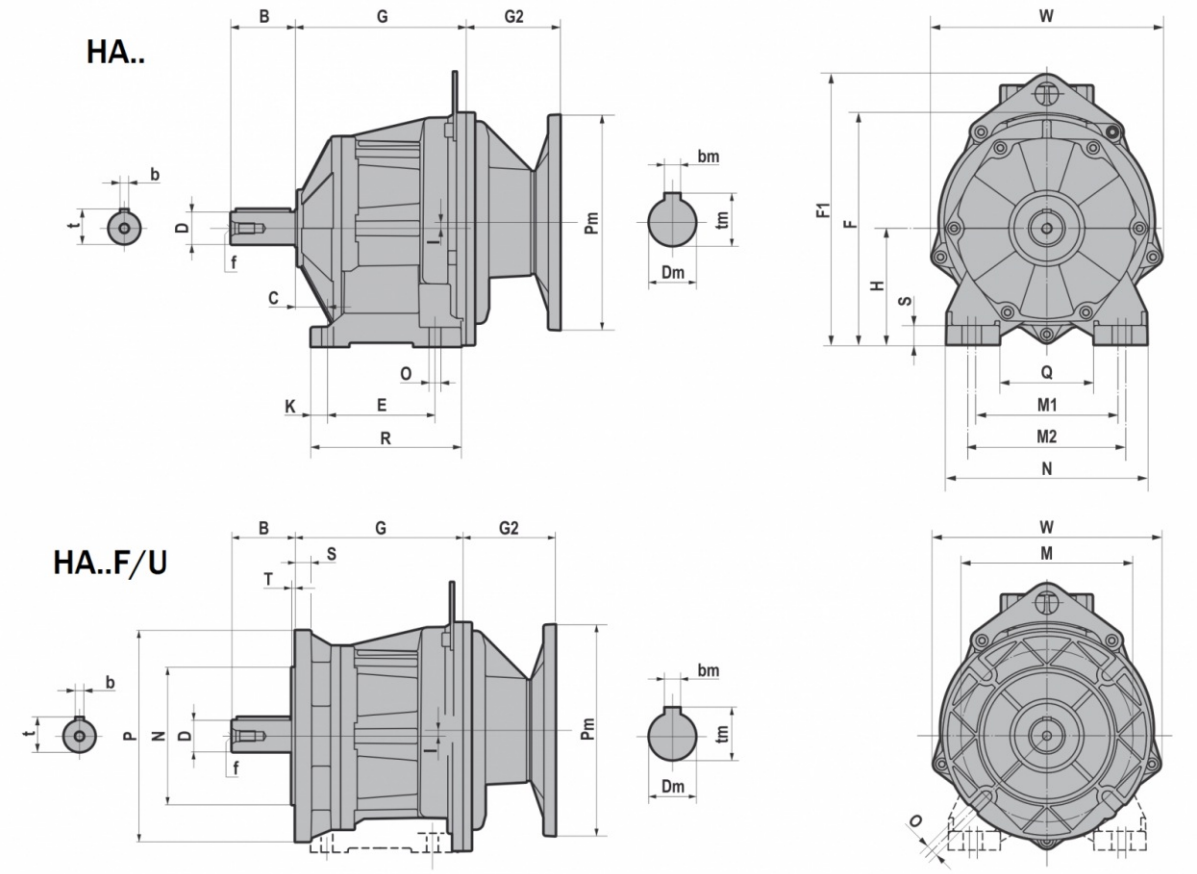

HA..F/U	D 0/-0,0005	B	b	t	f	C	E	F	F1	G	H	I	K	M1	M2	N	O	Q	R	S	W
HA32	0,75	1,57	0,1875	0,83	1/4-20	0,71	3,15	6,1	/	4,63	2,95	0,39	0,51	4,33	4,72	5,71	0,35	2,95	4,37	0,59	5,98
HA42	1	1,97	0,25	1,11	3/8-16	0,98	3,35	6,3	/	4,9	3,15	0,39	0,51	4,33	4,72	5,71	0,35	2,95	4,37	0,59	5,98
HA52	1,25	2,36	0,25	1,36	1/2-13	1,18	3,94	8,56	10,06	6,26	4,33	0,22	0,61	5,31	5,91	7,48	0,43	3,54	5,51	0,71	8,58
HA62	1,625	3,15	0,375	1,79	5/8-11	1,38	4,33	9,35	10,85	6,61	4,72	0,61	0,79	6,69	7,28	9,06	0,55	4,72	5,91	0,79	8,58

	P	M	N	O	G	I	S	T	W
HA32F/U	5,51	4,53	3,74 -0,0014/-0,0035	0,35	4,63	0,39	0,39	0,12	5,98
	4,72	3,94	3,15 -0,0012/-0,0030						
HA42F/U	6,30	5,12	4,33 -0,0014/-0,0035	0,35	4,90	0,39	0,39	0,14	5,98
	5,51	4,53	3,74 -0,0014/-0,0035						
HA52F/U	7,87	6,50	5,12 -0,0017/-0,0042	0,43	6,26	0,22	0,59	0,14	8,58
	6,30	5,12	4,33 -0,0014/-0,0035						
HA62F/U	9,84	8,46	7,09 -0,0017/-0,0042	0,55	6,61	0,61	0,59	0,16	8,58
	7,87	6,50	5,12 -0,0017/-0,0042						

		G2	
NEMA	Pm x Dm	HA32/F/U - HA42/F/U	HA52F/U - HA62F/U
56C	6,5"x0,625"	3,78	3,98
140TC	6,5"x0,875"	3,78	3,98
180TC	9"x1,125"	/	3,98

NEMA	Pm	Dm	tm	bm
56C	6,69	0,625	0,71	0,1875
140TC	6,69	0,875	0,97	0,1875
180TC	9,06	1,125	1,24	0,2500

3.1.6 CHA.2

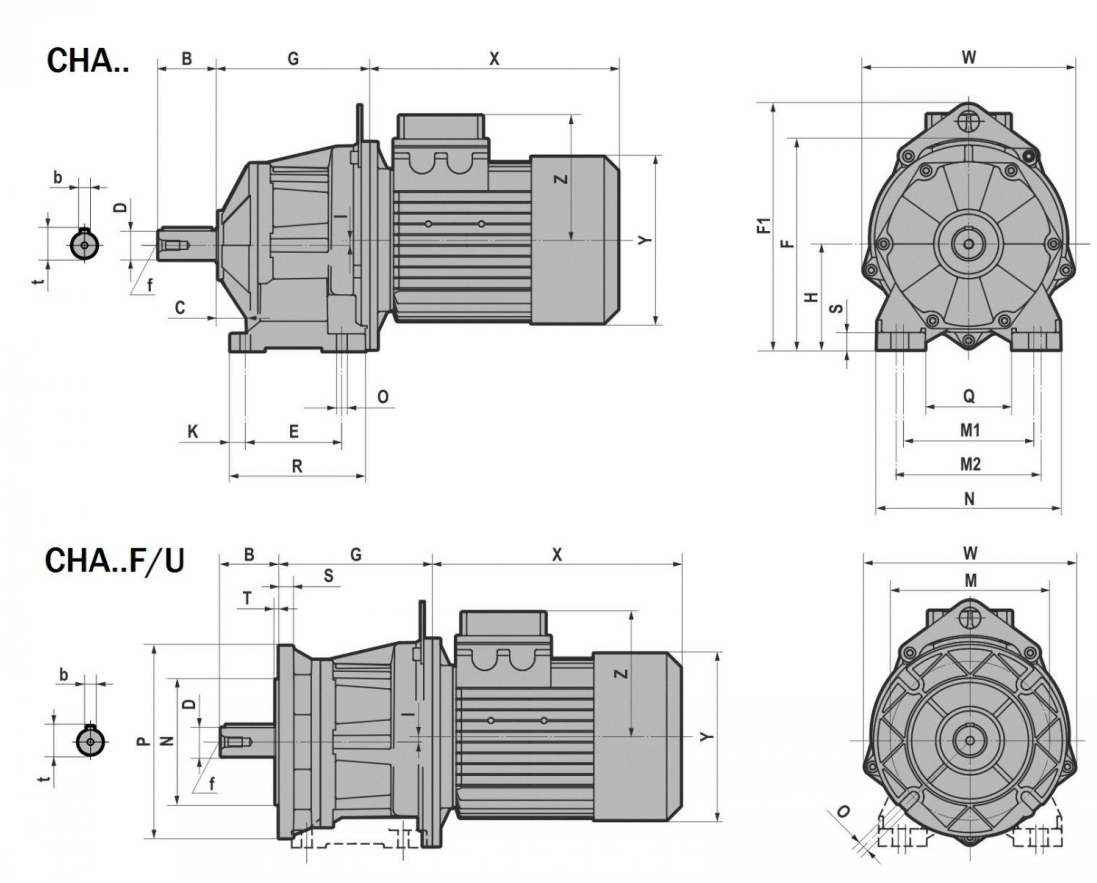

CHA..F/U	D 0/-0,0005	B	b	t	f	C	E	F	F1	G	H	I	K	M1	M2	N	O	Q	R	S	W
CHA32	0,75	1,57	0,1875	0,83	1/4-20	0,71	3,15	6,1	/	4,63	2,95	0,39	0,51	4,33	4,72	5,71	0,35	2,95	4,37	0,59	5,98
CHA42	1	1,97	0,25	1,11	3/8-16	0,98	3,35	6,3	/	4,9	3,15	0,39	0,51	4,33	4,72	5,71	0,35	2,95	4,37	0,59	5,98
CHA52	1,25	2,36	0,25	1,36	1/2-13	1,18	3,94	8,56	10,06	6,26	4,33	0,22	0,61	5,31	5,91	7,48	0,43	3,54	5,51	0,71	8,58
CHA62	1,625	3,15	0,375	1,79	5/8-11	1,38	4,33	9,35	10,85	6,61	4,72	0,61	0,79	6,69	7,28	9,06	0,55	4,72	5,91	0,79	8,58

	P	M	N	O	G	I	S	T	W
CHA32F/U	5,51	4,53	3,74 -0,0014/-0,0035	0,35	4,63	0,39	0,39	0,12	5,98
	4,72	3,94	3,15 -0,0012/-0,0030						
CHA42F/U	6,30	5,12	4,33 -0,0014/-0,0035	0,35	4,90	0,39	0,39	0,14	5,98
	5,51	4,53	3,74 -0,0014/-0,0035						
CHA52F/U	7,87	6,50	5,12 -0,0017/-0,0042	0,43	6,26	0,22	0,59	0,14	8,58
	6,30	5,12	4,33 -0,0014/-0,0035						
CHA62F/U	9,84	8,46	7,09 -0,0017/-0,0042	0,55	6,61	0,61	0,59	0,16	8,58
	7,87	6,50	5,12 -0,0017/-0,0042						

T (IE1 - IE2)								
CHA..F/U		063	071	080	090S	090L	100	112
CHA32 CHA42	X	7,1	8,07	8,78	9,13	10,12	/	/
	Y	4,8	5,47	6,22	6,81	6,81	/	/
	Z	4,09	4,41	4,80	5,12	5,12	/	/
CHA52 CHA62	X	/	/	8,58	9,13	10,12	11,42	11,89
	Y	/	/	6,22	6,81	6,81	7,52	8,31
	Z	/	/	4,80	5,12	5,12	5,47	6,06

TB (IE1 - IE2)								
CHA..F/U		063	071	080	090S	090L	100	112
CHA32 CHA42	X	9,37	10,67	11,57	12,17	13,15	/	/
	Y	4,76	5,47	6,22	6,81	6,81	/	/
	Z	4,69	5,08	5,39	6,18	6,18	/	/
CHA52 CHA62	X	/	/	11,42	12,17	13,15	14,65	15,75
	Y	/	/	6,22	6,81	6,81	7,52	8,31
	Z	/	/	5,39	6,18	6,18	9,06	9,06

3.1.7 IHA.2

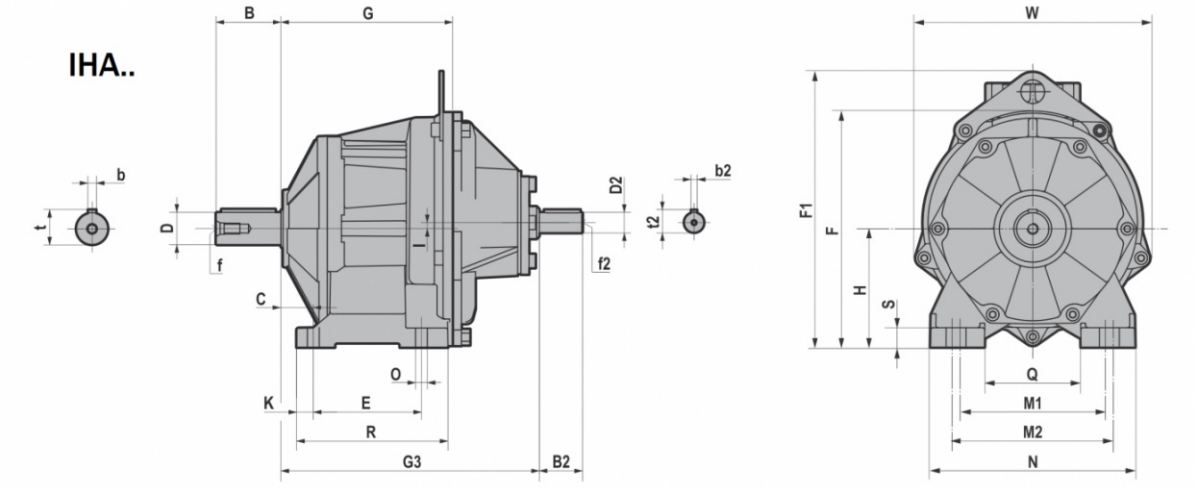

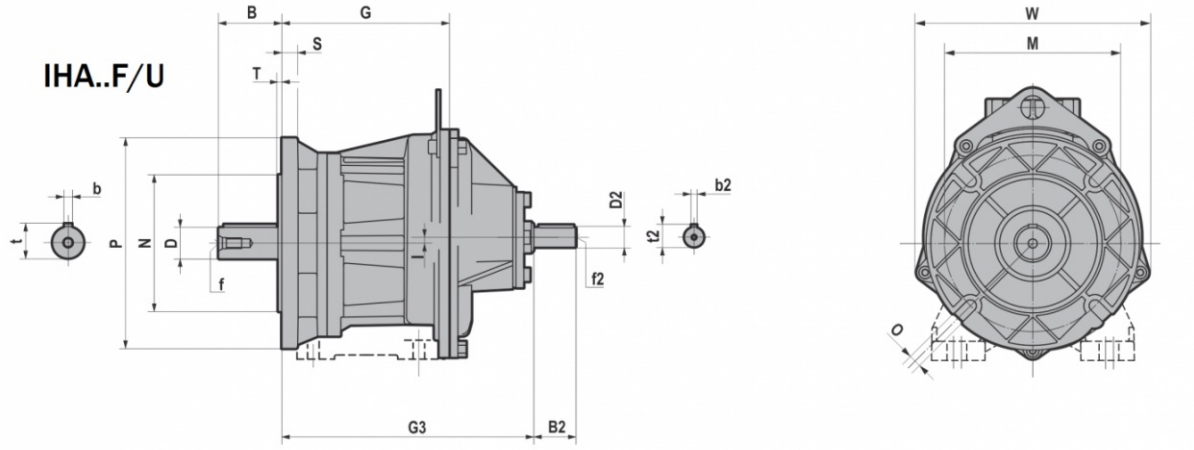

iHA..F/U	D 0/-0,0005	B	b	t	f	C	E	F	F1	G	H	I	K	M1	M2	N	O	Q	R	S	W
iHA32	0,75	1,57	0,1875	0,83	1/4-20	0,71	3,15	6,1	/	4,63	2,95	0,39	0,51	4,33	4,72	5,71	0,35	2,95	4,37	0,59	5,98
iHA42	1	1,97	0,25	1,11	3/8-16	0,98	3,35	6,3	/	4,9	3,15	0,39	0,51	4,33	4,72	5,71	0,35	2,95	4,37	0,59	5,98
iHA52	1,25	2,36	0,25	1,36	1/2-13	1,18	3,94	8,56	10,06	6,26	4,33	0,22	0,61	5,31	5,91	7,48	0,43	3,54	5,51	0,71	8,58
iHA62	1,625	3,15	0,375	1,79	5/8-11	1,38	4,33	9,35	10,85	6,61	4,72	0,61	0,79	6,69	7,28	9,06	0,55	4,72	5,91	0,79	8,58

	P	M	N	O	G	I	S	T	W
iHA32F/U	5,51	4,53	3,74 -0,0014/-0,0035	0,35	4,63	0,39	0,39	0,12	5,98
	4,72	3,94	3,15 -0,0012/-0,0030						
iHA42F/U	6,30	5,12	4,33 -0,0014/-0,0035	0,35	4,90	0,39	0,39	0,14	5,98
	5,51	4,53	3,74 -0,0014/-0,0035						
iHA52F/U	7,87	6,50	5,12 -0,0017/-0,0042	0,43	6,26	0,22	0,59	0,14	8,58
	6,30	5,12	4,33 -0,0014/-0,0035						
iHA62F/U	9,84	8,46	7,09 -0,0017/-0,0042	0,55	6,61	0,61	0,59	0,16	8,58
	7,87	6,50	5,12 -0,0017/-0,0042						

	G3	D2 0/-0,0005	B2	b2	f2	t2
IHA32	7,80	0,75	1,57	0,1875	1/4-20	0,83
IHA42	8,07	0,75	1,57	0,1875	1/4-20	0,83
IHA52	9,41	0,875	1,97	0,1875	1/4-20	0,96
IHA62	9,76	0,875	1,97	0,1875	1/4-20	0,96

3.1.8 HA.3

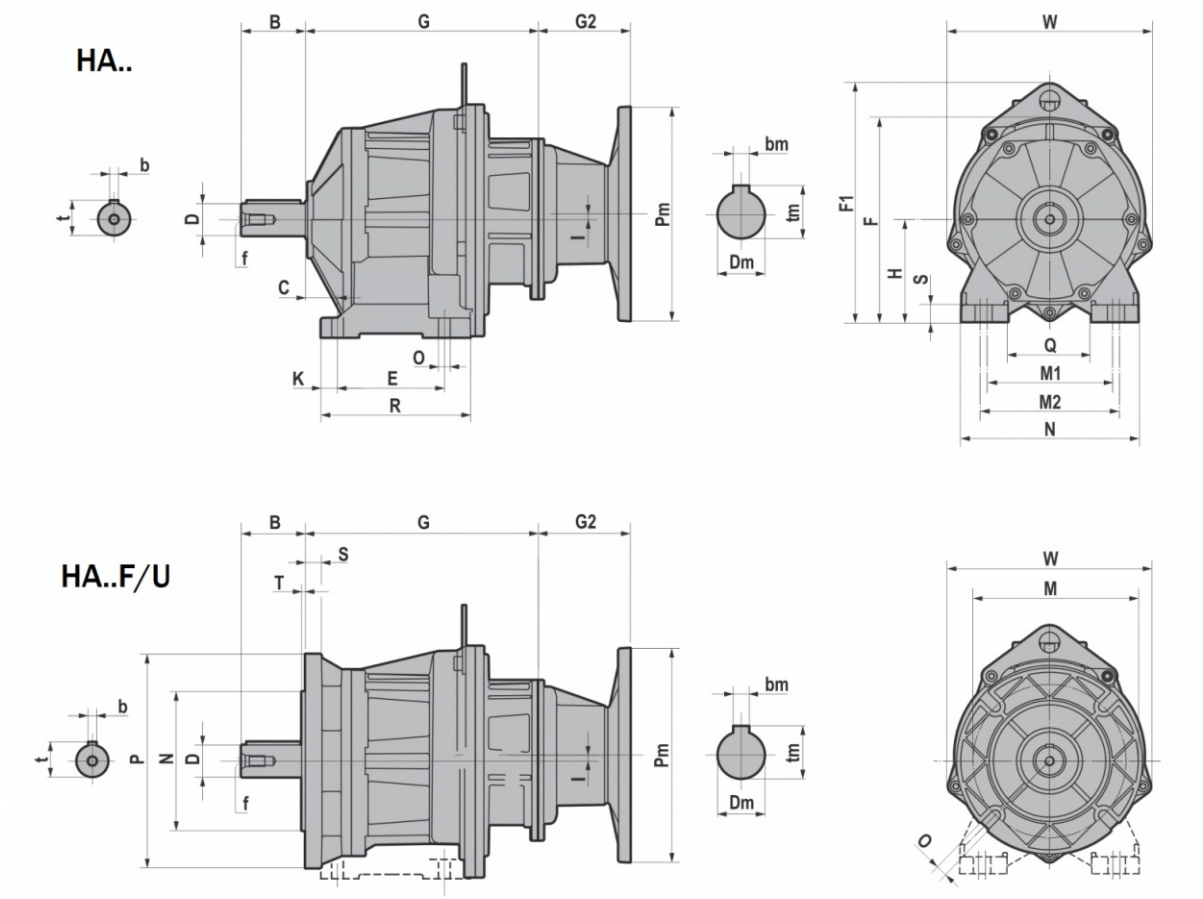

HA..F/U	D 0/-0,0005	B	b	t	f	C	E	F	F1	G	H	I	K	M1	M2	N	O	Q	R	S	W
HA33	0,75	1,57	0,1875	0,83	1/4-20	0,71	3,15	6,1	/	4,63	2,95	0,39	0,51	4,33	4,72	5,71	0,35	2,95	4,37	0,59	5,98
HA43	1	1,97	0,25	1,11	3/8-16	0,98	3,35	6,3	/	4,9	3,15	0,39	0,51	4,33	4,72	5,71	0,35	2,95	4,37	0,59	5,98
HA53	1,25	2,36	0,25	1,36	1/2-13	1,18	3,94	8,56	10,06	6,26	4,33	0,22	0,61	5,31	5,91	7,48	0,43	3,54	5,51	0,71	8,58
HA63	1,625	3,15	0,375	1,79	5/8-11	1,38	4,33	9,35	10,85	6,61	4,72	0,61	0,79	6,69	7,28	9,06	0,55	4,72	5,91	0,79	8,58

	P	M	N	O	G	I	S	T	W
HA33F/U	5,51	4,53	3,74 -0,0014/-0,0035	0,35	4,63	0,39	0,39	0,12	5,98
	4,72	3,94	3,15 -0,0012/-0,0030						
HA43F/U	6,30	5,12	4,33 -0,0014/-0,0035	0,35	4,90	0,39	0,39	0,14	5,98
	5,51	4,53	3,74 -0,0014/-0,0035						
HA53F/U	7,87	6,50	5,12 -0,0017/-0,0042	0,43	6,26	0,22	0,59	0,14	8,58
	6,30	5,12	4,33 -0,0014/-0,0035						
HA63F/U	9,84	8,46	7,09 -0,0017/-0,0042	0,55	6,61	0,61	0,59	0,16	8,58
	7,87	6,50	5,12 -0,0017/-0,0042						

		G2	
NEMA	Pm x Dm	HA33/F/U - HA43/F/U	HA53/F/U - HA63/F/U
56C	6,5"x0,625"	3,78	3,78
140TC	6,5"x0,875"	/	3,78

NEMA	Pm	Dm	tm	bm
56C	6,69	0,625	0,71	0,1875
140TC	6,69	0,875	0,97	0,1875

3.1.9 CHA.3

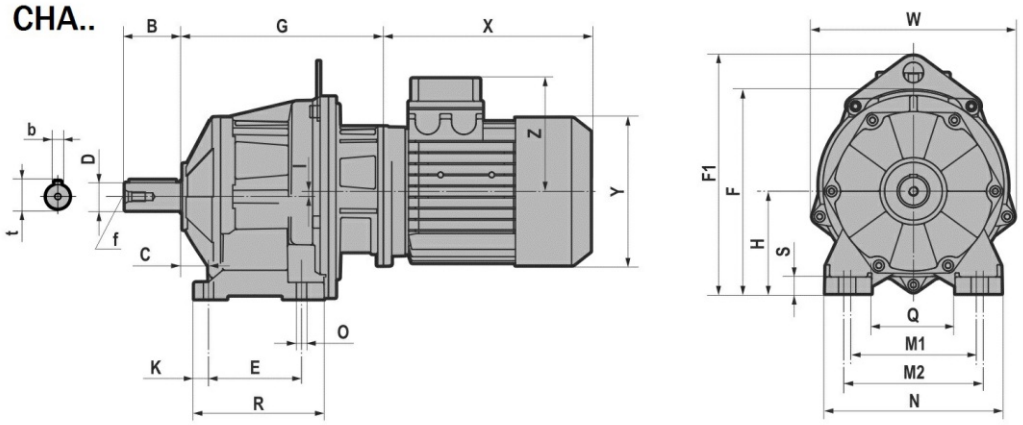

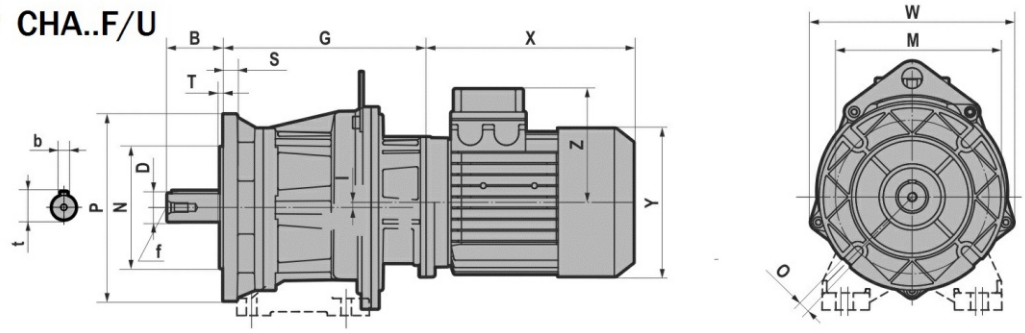

CHA..F/U	D 0/-0,0005	B	b	t	f	C	E	F	F1	G	H	I	K	M1	M2	N	O	Q	R	S	W
CHA33	0,75	1,57	0,1875	0,83	1/4-20	0,71	3,15	6,1	/	4,63	2,95	0,39	0,51	4,33	4,72	5,71	0,35	2,95	4,37	0,59	5,98
CHA43	1	1,97	0,25	1,11	3/8-16	0,98	3,35	6,3	/	4,9	3,15	0,39	0,51	4,33	4,72	5,71	0,35	2,95	4,37	0,59	5,98
CHA53	1,25	2,36	0,25	1,36	1/2-13	1,18	3,94	8,56	10,06	6,26	4,33	0,22	0,61	5,31	5,91	7,48	0,43	3,54	5,51	0,71	8,58
CHA63	1,625	3,15	0,375	1,79	5/8-11	1,38	4,33	9,35	10,85	6,61	4,72	0,61	0,79	6,69	7,28	9,06	0,55	4,72	5,91	0,79	8,58

	P	M	N	O	G	I	S	T	W
CHA33F/U	5,51	4,53	3,74 -0,0014/-0,0035	0,35	4,63	0,39	0,39	0,12	5,98
	4,72	3,94	3,15 -0,0012/-0,0030						
CHA43F/U	6,30	5,12	4,33 -0,0014/-0,0035	0,35	4,90	0,39	0,39	0,14	5,98
	5,51	4,53	3,74 -0,0014/-0,0035						
CHA53F/U	7,87	6,50	5,12 -0,0017/-0,0042	0,43	6,26	0,22	0,59	0,14	8,58
	6,30	5,12	4,33 -0,0014/-0,0035						
CHA63F/U	9,84	8,46	7,09 -0,0017/-0,0042	0,55	6,61	0,61	0,59	0,16	8,58
	7,87	6,50	5,12 -0,0017/-0,0042						

T (IE1 - IE2)						
CHA..F/U		063	071	080	090S	090L
CHA33 CHA43 CHA53 CHA63	X	7,09	8,07	8,78	9,13	10,12
	Y	4,76	5,47	6,22	6,81	6,81
	Z	4,09	4,41	4,80	5,12	5,12

TB (IE1 - IE2)						
CHA..F/U		063	071	080	090S	090L
CHA33 CHA43 CHA53 CHA63	X	9,37	10,67	11,57	12,17	13,15
	Y	4,76	5,47	6,22	6,81	6,81
	Z	4,69	5,08	5,39	6,18	6,18

3.1.10 IHA.3

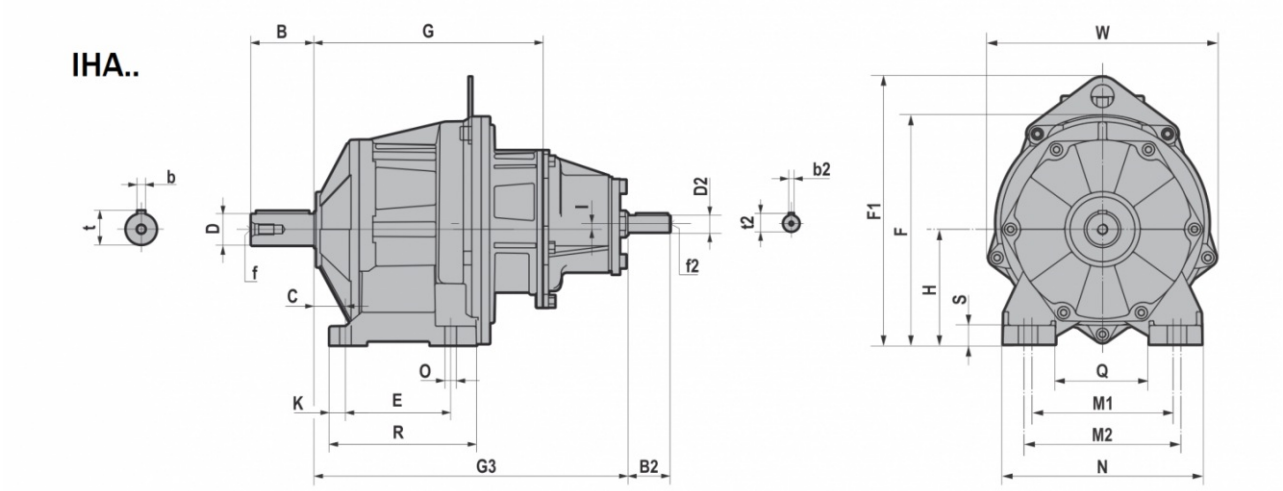

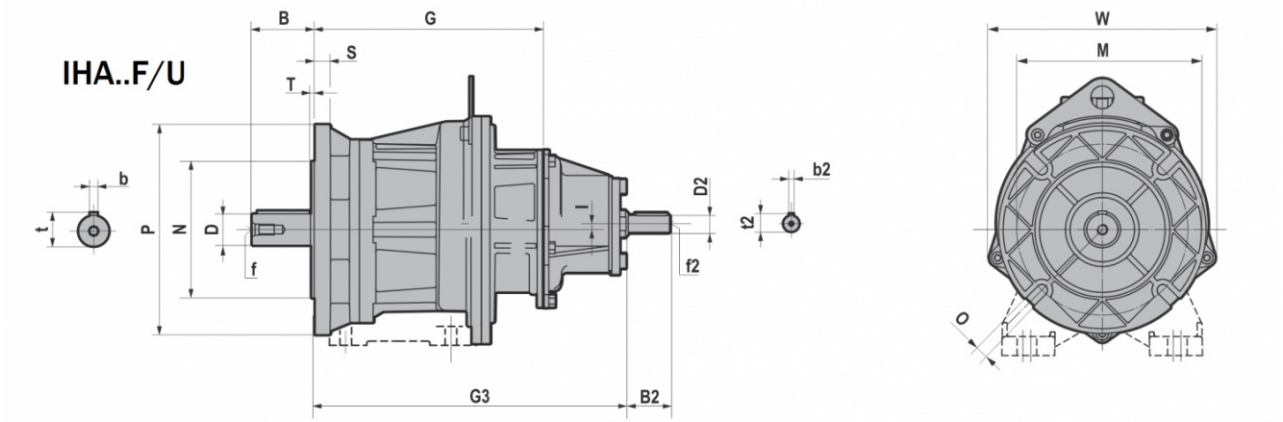

IHA..F/U	D 0/-0,0005	B	b	t	f	C	E	F	F1	G	H	I	K	M1	M2	N	O	Q	R	S	W
IHA33	0,75	1,57	0,1875	0,83	1/4-20	0,71	3,15	6,1	/	4,63	2,95	0,39	0,51	4,33	4,72	5,71	0,35	2,95	4,37	0,59	5,98
IHA43	1	1,97	0,25	1,11	3/8-16	0,98	3,35	6,3	/	4,9	3,15	0,39	0,51	4,33	4,72	5,71	0,35	2,95	4,37	0,59	5,98
IHA53	1,25	2,36	0,25	1,36	1/2-13	1,18	3,94	8,56	10,06	6,26	4,33	0,22	0,61	5,31	5,91	7,48	0,43	3,54	5,51	0,71	8,58
IHA63	1,625	3,15	0,375	1,79	5/8-11	1,38	4,33	9,35	10,85	6,61	4,72	0,61	0,79	6,69	7,28	9,06	0,55	4,72	5,91	0,79	8,58

	P	M	N	O	G	I	S	T	W
IHA33F/U	5,51	4,53	3,74 -0,0014/-0,0035	0,35	4,63	0,39	0,39	0,12	5,98
	4,72	3,94	3,15 -0,0012/-0,0030						
IHA43F/U	6,30	5,12	4,33 -0,0014/-0,0035	0,35	4,90	0,39	0,39	0,14	5,98
	5,51	4,53	3,74 -0,0014/-0,0035						
IHA53F/U	7,87	6,50	5,12 -0,0017/-0,0042	0,43	6,26	0,22	0,59	0,14	8,58
	6,30	5,12	4,33 -0,0014/-0,0035						
IHA63F/U	9,84	8,46	7,09 -0,0017/-0,0042	0,55	6,61	0,61	0,59	0,16	8,58
	7,87	6,50	5,12 -0,0017/-0,0042						

	G3	D2 0/-0,0005	B2	b2	f2	t2
IHA33	9,88	0,75	1,57	0,1875	1/4-20	0,83
IHA43	10,16	0,75	1,57	0,1875	1/4-20	0,83
IHA53	11,77	0,75	1,57	0,1875	1/4-20	0,83
IHA63	12,13	0,75	1,57	0,1875	1/4-20	0,83

3.1.11 H..1

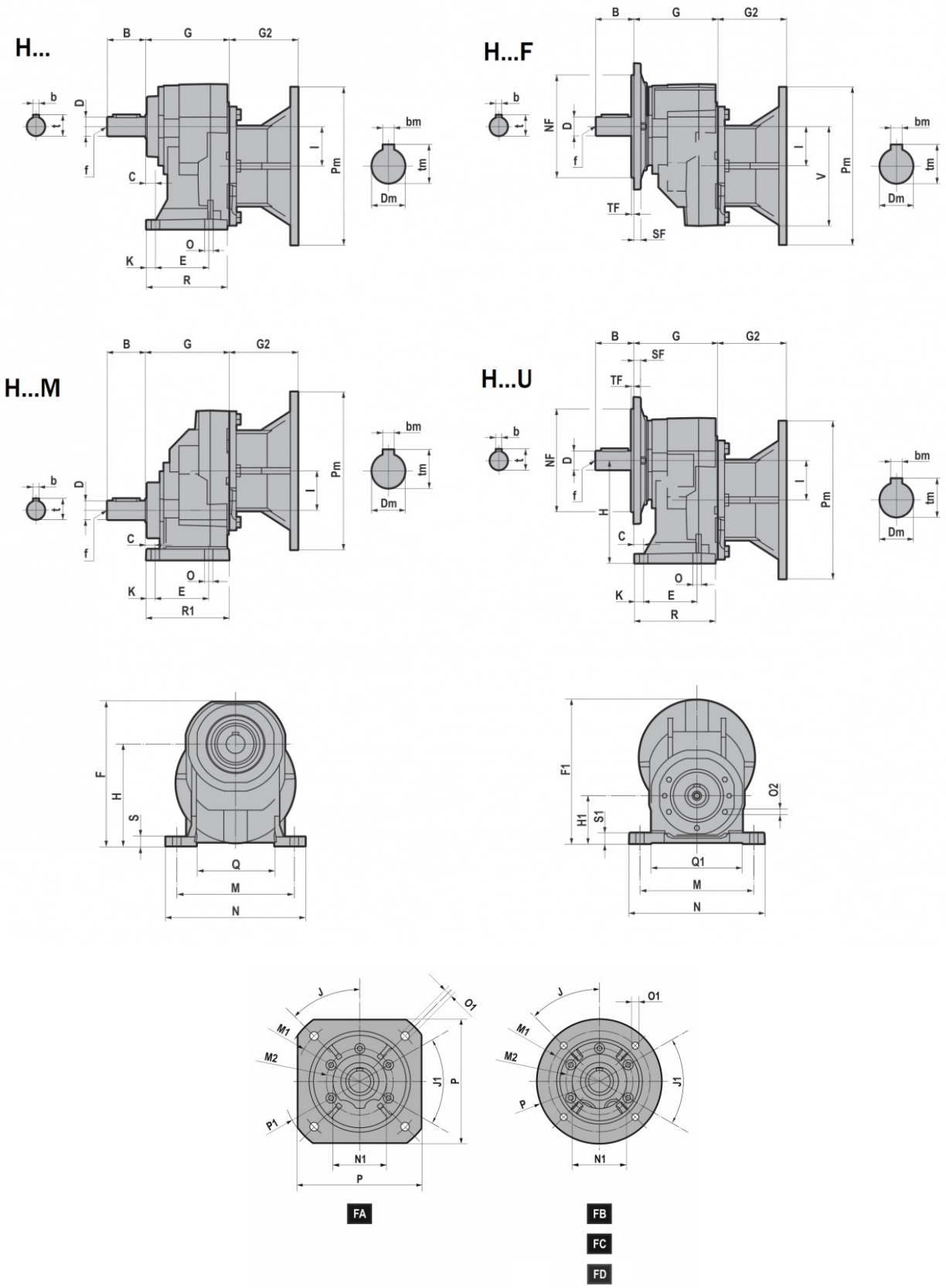
H...
B
G
G2
b
t
D
f
C
O
K
E
R
l
Pm
bm
tm
Dm
H...F
NF
TF
SF
V
H...M
R1
H...U
H
F
S
Q
M
N
F1
H1
S1
O2
Q1
J
M1
M2
P1
O1
J1
P
N1
FA
FB
FC
FD

3.1 REDUCERS/GEARED MOTORS

H.../F/U/M	D 0/-0,0005	B	C	E	F	F1	G	H	H1	I	K	M	N
H041	0,75	1,57	0,51	1,77	6,63	6,61	3,94	4,72	1,97	1,65	0,47	4,13	5,12 4,92 (H041M)
H051	1	1,97	0,51	2,76	7,22	7,44	4,33	5,12	2,48	1,97	0,47	5,91	7,01
H061	1,25	2,36	0,63	2,76	9,09	8,5	4,92	6,5	3,15	2,36	0,55	6,5	7,68
H081	1,5	3,15	0,98	3,35	10,91	11,18	5,31	7,68	3,94	3,15	0,91	7,28	9,06 9,13 (H081M)
H101	1,875	4,33	0,75	5,12	13,98	14,84	7,09	9,92	4,92	3,94	0,67	9,45	11,61
H121	2,125	4,33	0,98	5,91	16,61	16,79	8,27	11,81	6,3	4,53	0,87	11,02	13,39

H.../F/U/M	O	O2	Q	Q1	R	R1	S	S1	-V	b	t	f
H041	0,35	M8x17 (n.5)	2,91	2,17	3,41	3,86	0,37	0,31	4,65	0,1875	0,83	1/4-20
H051	0,43	M8x17 (n.5)	3,94	4,78	4,17	4,29	0,45	0,55	4,96	0,25	1,11	1/4-20
H061	0,43	M8x17 (n.5)	4,33	5,33	4,72	4,84	0,59	0,63	5,35	0,25	1,36	1/4-20
H081	0,55	M10x20 (n.7)	4,84	5,94	5,12	5,31	0,59	0,79	7,24	0,375	1,66	1/2-13
H101	0,71	M10x20 (n.6)	6,38	7,3	6,81	7,01	0,63	0,87	9,9	0,5	2,09	5/8-11
H121	0,71	M12x25 (n.7)	7,2	8,82	7,95	8,15	0,75	0,98	10,49	0,5	2,35	5/8-11

		J	J1	M1	M2	NF	N1	O1	P	P1	SF	TF
H041/F/U H051/F/U	FA	45	45	6,50	3,35	5,12	2,76	0,43	6,30	7,87	0,35	0,14
	FB			5,12	3,35	4,33		0,35	6,30	/	0,35	0,14
	FC			4,53	3,35	3,74		0,35	5,51	/	0,35	0,12
	FD			3,94	3,35	3,15		M8	4,72	/	0,35	0,12
H061/F/U	FA	45	45	8,46	4,13	7,09	3,54	0,55	7,87	9,84	0,47	0,16
	FB			6,50	4,13	5,12		0,43	7,87	/	0,47	0,14
H081/F/U H101/F/U	FA	45	45	10,43	5,12	9,06	4,33	0,55	9,84	11,81	0,59	0,16
	FB			8,46	5,12	7,09		0,55	9,84	/	0,59	0,16
	FC			6,50	5,12	5,12		0,43	7,87	/	0,59	0,14
H121/F/U	FA	45	45	11,81	6,50	9,84	5,12	0,71	11,81	13,78	0,63	0,20
	FB			10,43	6,50	9,06		0,55	11,81	/	0,63	0,16
	FC			8,46	6,50	7,09		0,55	9,84	/	0,63	0,16

		G2		
NEMA	Pm x Dm	H041/F/U/M H051/F/U/M H061/F/U/M	H081/F/U/M	H101/F/U/M H121/F/U/M
56C	6,5"x0,625"	3,74	2,95	/
140TC	6,5"x0,875"	3,74	2,95	/
180TC	9"x1,125"	4,33	3,54	3,17
210TC	9"x1,375"	/	6,02	5,65
250TC	9"x1,625"	/	/	5,65
280TC	11"x1,875"	/	/	6,89

NEMA	Pm	Dm	tm	bm
56C	6,69	0,625	0,71	0,1875
140TC	6,69	0,875	0,97	0,1875
180TC	9,06	1,125	1,24	0,2500
210TC	9,06	1,375	1,52	0,3125
250TC	9,06	1,625	1,80	0,3750
280TC	11,02	1,875	2,10	0,5000

3.1.12 CH..1

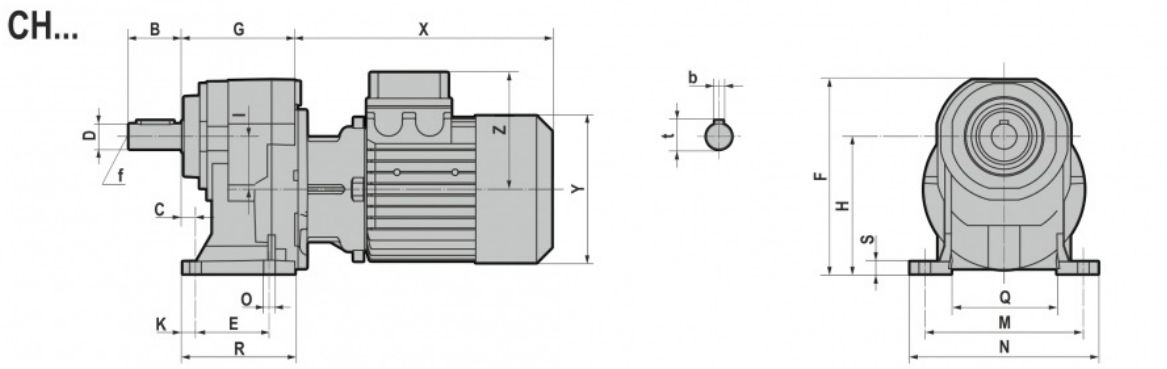
CH...
B
G
X
D
f
C
I
Z
Y
O
K
E
R
b
t
F
H
S
Q
M
N

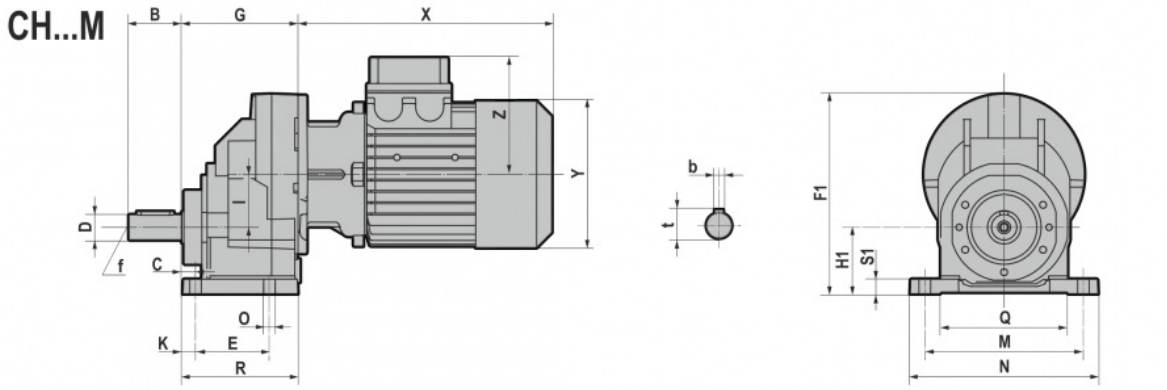
CH...M
B
G
X
D
f
C
I
Z
Y
O
K
E
R
b
t
F1
H1
S1
Q
M
N

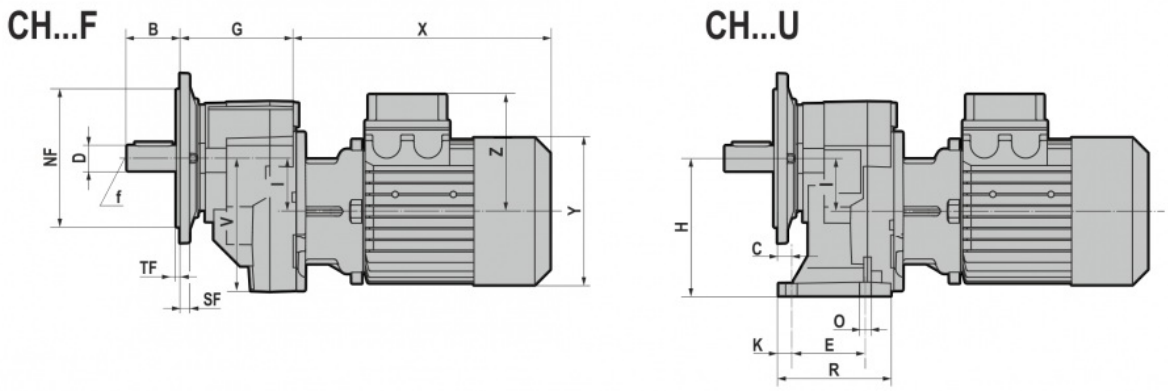
CH...F
B
G
X
NF
D
f
I
V
Z
Y
TF
SF
CH...U
H
C
I
O
K
E
R

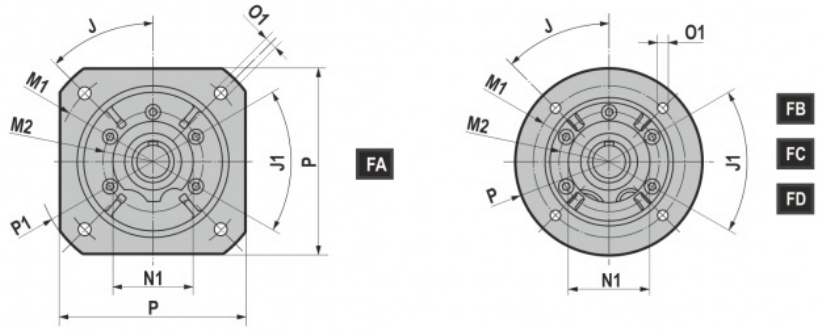
J
O1
M1
M2
P1
J1
P
N1
FA
FB
FC
FD

3.1 REDUCERS/GEARED MOTORS

CH.../F/U/M	D 0/-0,0005	B	C	E	F	F1	G	H	H1	I	K	M	N
CH041	0,75	1,57	0,51	1,77	6,63	6,61	3,94	4,72	1,97	1,65	0,47	4,13	5,12 4,92 (H041M)
CH051	1	1,97	0,51	2,76	7,22	7,44	4,33	5,12	2,48	1,97	0,47	5,91	7,01
CH061	1,25	2,36	0,63	2,76	9,09	8,5	4,92	6,5	3,15	2,36	0,55	6,5	7,68
CH081	1,5	3,15	0,98	3,35	10,91	11,18	5,31	7,68	3,94	3,15	0,91	7,28	9,06 9,13 (H081M)
CH101	1,875	4,33	0,75	5,12	13,98	14,84	7,09	9,92	4,92	3,94	0,67	9,45	11,61
CH121	2,125	4,33	0,98	5,91	16,61	16,79	8,27	11,81	6,3	4,53	0,87	11,02	13,39

CH.../F/U/M	O	O2	Q	Q1	R	R1	S	S1	-V	b	t	f
CH041	0,35	M8x17 (n.5)	2,91	2,17	3,41	3,86	0,37	0,31	4,65	0,1875	0,83	1/4-20
CH051	0,43	M8x17 (n.5)	3,94	4,78	4,17	4,29	0,45	0,55	4,96	0,25	1,11	1/4-20
CH061	0,43	M8x17 (n.5)	4,33	5,33	4,72	4,84	0,59	0,63	5,35	0,25	1,36	1/4-20
CH081	0,55	M10x20 (n.7)	4,84	5,94	5,12	5,31	0,59	0,79	7,24	0,375	1,66	1/2-13
CH101	0,71	M10x20 (n.6)	6,38	7,3	6,81	7,01	0,63	0,87	9,9	0,5	2,09	5/8-11
CH121	0,71	M12x25 (n.7)	7,2	8,82	7,95	8,15	0,75	0,98	10,49	0,5	2,35	5/8-11

		J	J1	M1	M2	NF	N1	O1	P	P1	SF	TF
CH041/F/U CH051/F/U	FA	45	45	6,50	3,35	5,12	2,76	0,43	6,30	7,87	0,35	0,14
	FB			5,12	3,35	4,33		0,35	6,30	/	0,35	0,14
	FC			4,53	3,35	3,74		0,35	5,51	/	0,35	0,12
	FD			3,94	3,35	3,15		M8	4,72	/	0,35	0,12
CH061/F/U	FA	45	45	8,46	4,13	7,09	3,54	0,55	7,87	9,84	0,47	0,16
	FB			6,50	4,13	5,12		0,43	7,87	/	0,47	0,14
CH081/F/U CH101/F/U	FA	45	45	10,43	5,12	9,06	4,33	0,55	9,84	11,81	0,59	0,16
	FB			8,46	5,12	7,09		0,55	9,84	/	0,59	0,16
	FC			6,50	5,12	5,12		0,43	7,87	/	0,59	0,14
CH121/F/U	FA	45	45	11,81	6,50	9,84	5,12	0,71	11,81	13,78	0,63	0,20
	FB			10,43	6,50	9,06		0,55	11,81	/	0,63	0,16
	FC			8,46	6,50	7,09		0,55	9,84	/	0,63	0,16

T (IE1 - IE2)										
		063	071	080	090S	090L	100	112	132S	132M/L
CH041 CH051 CH061	X	8,5	9,1	10,5	11,6	12,6	13,1	13,8	/	/
	Y	4,8	5,5	6,2	6,8	6,8	7,5	8,3	/	/
	Z	4,1	4,4	4,8	5,1	5,1	5,5	6,1	/	/
CH081	X	/	8,7	9,8	10,9	11,8	13,2	14	15,9	17,4
	Y	/	5,5	6,2	6,8	6,8	7,5	8,3	9,8	9,8
	Z	/	4,4	4,8	5,1	5,1	5,5	6,1	7,6	7,6
CH101 CH121	X	/	/	/	10,5	11,5	12,8	13,7	15,6	17,1
	Y	/	/	/	6,8	6,8	7,5	8,3	9,8	9,8
	Z	/	/	/	5,1	5,1	5,5	6,1	7,6	7,6

TB (IE1 - IE2)										
		063	071	080	090S	090L	100	112	132S	132M/L
CH041 CH051 CH061	X	10,7	12,1	13,4	14,7	15,7	16,3	17,6	/	/
	Y	4,8	5,5	6,2	6,8	6,8	7,5	8,3	/	/
	Z	4,7	5,1	5,4	6,2	6,2	6,6	7,2	/	/
CH081	X	/	11,3	12,6	13,9	14,9	16,4	17,8	19,9	21,5
	Y	/	5,5	6,2	6,8	6,8	7,5	8,3	9,8	9,8
	Z	/	5,1	5,4	6,2	6,2	6,6	7,2	9,1	9,1
CH101 CH121	X	/	/	/	13,5	14,5	16	17,4	19,5	21,1
	Y	/	/	/	6,8	6,8	7,5	8,3	9,8	9,8
	Z	/	/	/	6,2	6,2	6,6	7,2	9,1	9,1

3.1.13 IH..1

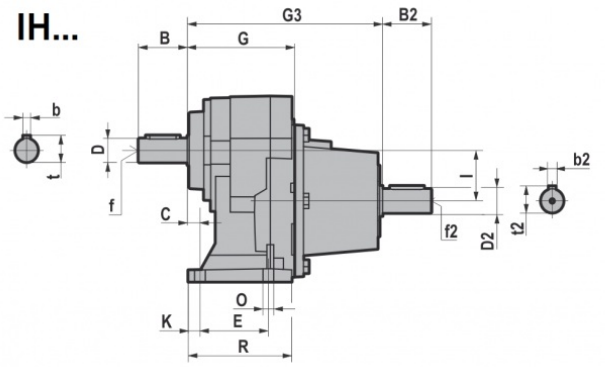

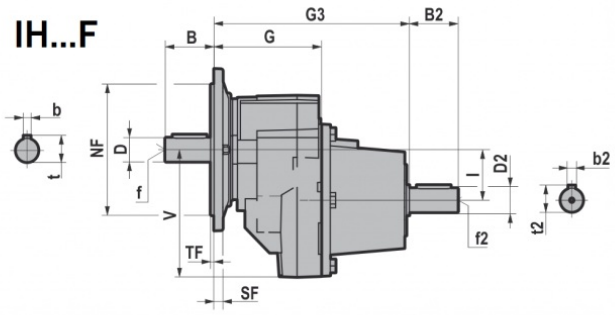

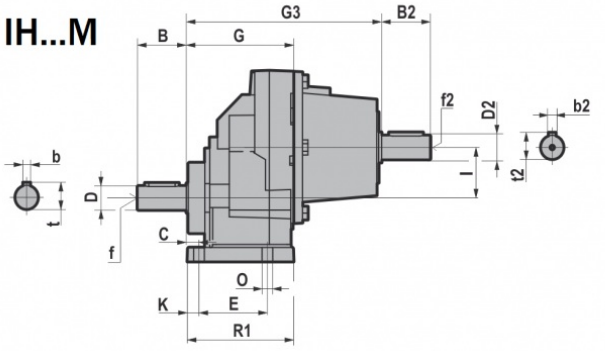

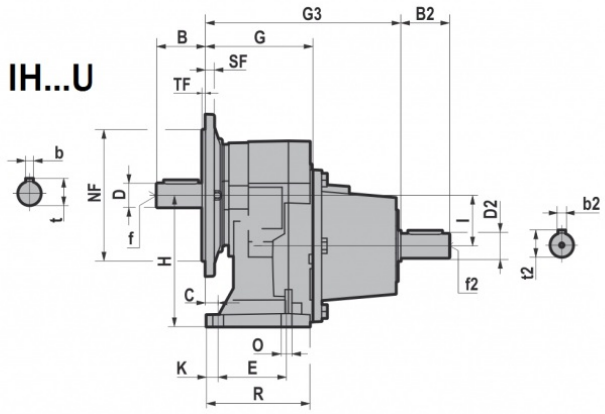

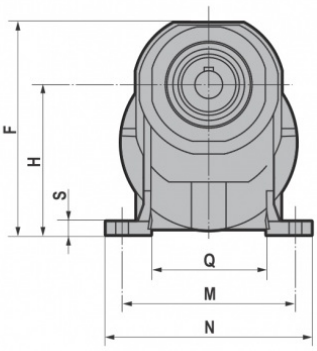

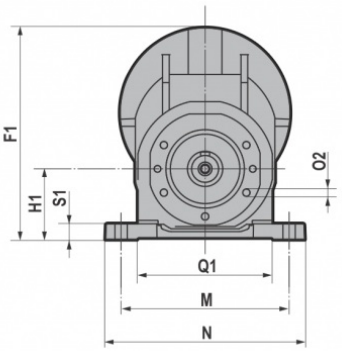

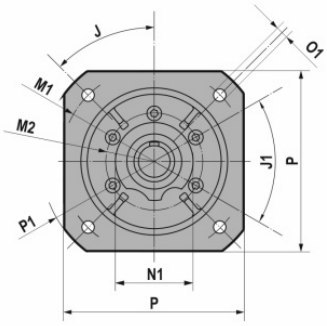

FA

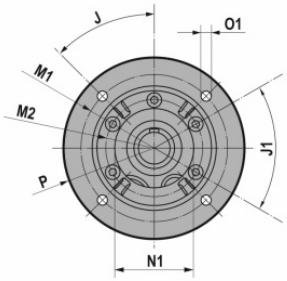

FB

FC

FD

3.1 REDUCERS/GEARED MOTORS

IH.../F/U/M	D 0/-0,0005	B	C	E	F	F1	G	H	H1	I	K	M	N
IH041	0,75	1,57	0,51	1,77	6,63	6,61	3,94	4,72	1,97	1,65	0,47	4,13	5,12 4,92 (H041M)
IH051	1	1,97	0,51	2,76	7,22	7,44	4,33	5,12	2,48	1,97	0,47	5,91	7,01
IH061	1,25	2,36	0,63	2,76	9,09	8,5	4,92	6,5	3,15	2,36	0,55	6,5	7,68
IH081	1,5	3,15	0,98	3,35	10,91	11,18	5,31	7,68	3,94	3,15	0,91	7,28	9,06 9,13 (H081M)
IH101	1,875	4,33	0,75	5,12	13,98	14,84	7,09	9,92	4,92	3,94	0,67	9,45	11,61
IH121	2,125	4,33	0,98	5,91	16,61	16,79	8,27	11,81	6,3	4,53	0,87	11,02	13,39

IH.../F/U/M	O	O2	Q	Q1	R	R1	S	S1	-V	b	t	f
H041	0,35	M8x17 (n.5)	2,91	2,17	3,41	3,86	0,37	0,31	4,65	0,1875	0,83	1/4-20
IH051	0,43	M8x17 (n.5)	3,94	4,78	4,17	4,29	0,45	0,55	4,96	0,25	1,11	1/4-20
IH061	0,43	M8x17 (n.5)	4,33	5,33	4,72	4,84	0,59	0,63	5,35	0,25	1,36	1/4-20
IH081	0,55	M10x20 (n.7)	4,84	5,94	5,12	5,31	0,59	0,79	7,24	0,375	1,66	1/2-13
IH101	0,71	M10x20 (n.6)	6,38	7,3	6,81	7,01	0,63	0,87	9,9	0,5	2,09	5/8-11
IH121	0,71	M12x25 (n.7)	7,2	8,82	7,95	8,15	0,75	0,98	10,49	0,5	2,35	5/8-11

		J	J1	M1	M2	NF	N1	O1	P	P1	SF	TF
IH041/F/U IH051/F/U	FA	45	45	6,50	3,35	5,12	2,76	0,43	6,30	7,87	0,35	0,14
	FB			5,12	3,35	4,33		0,35	6,30	/	0,35	0,14
	FC			4,53	3,35	3,74		0,35	5,51	/	0,35	0,12
	FD			3,94	3,35	3,15		M8	4,72	/	0,35	0,12
IH061/F/U	FA	45	45	8,46	4,13	7,09	3,54	0,55	7,87	9,84	0,47	0,16
	FB			6,50	4,13	5,12		0,43	7,87	/	0,47	0,14
IH081/F/U IH101/F/U	FA	45	45	10,43	5,12	9,06	4,33	0,55	9,84	11,81	0,59	0,16
	FB			8,46	5,12	7,09		0,55	9,84	/	0,59	0,16
	FC			6,50	5,12	5,12		0,43	7,87	/	0,59	0,14
IH121/F/U	FA	45	45	11,81	6,50	9,84	5,12	0,71	11,81	13,78	0,63	0,20
	FB			10,43	6,50	9,06		0,55	11,81	/	0,63	0,16
	FC			8,46	6,50	7,09		0,55	9,84	/	0,63	0,16

	G3	B2	D2	b2	t2	f2
IH041	7,48	1,57	0,625 0/-0,0005	0,1875	0,70	1/4-20
IH051	7,87	1,97	0,875 0/-0,0005	0,1875	0,96	1/4-20
IH061	8,46	1,97	0,875 0/-0,0005	0,1875	0,96	1/4-20
IH081	9,75	2,76	1,375 0/-0,0005	0,3125	1,51	1/2-13
IH101	12,07	3,15	1,625 0/-0,001	0,3750	1,79	5/8-11
IH121	13,25	3,15	1,625 0/-0,001	0,3750	1,79	5/8-11

3.1.14 H..2/3

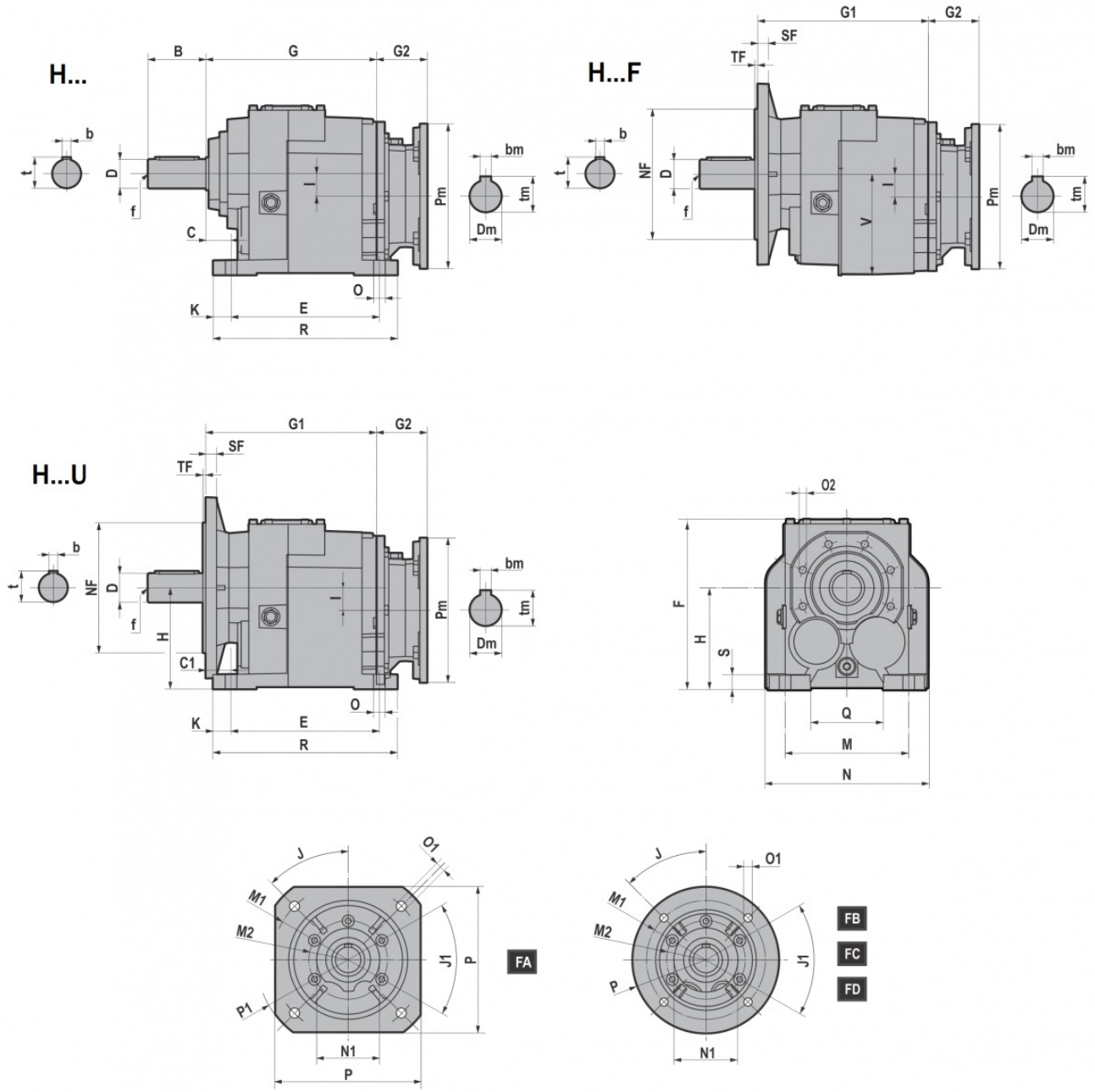
H...
B
G
G2
b
t
D
f
C
I
Pm
bm
tm
Dm
O
K
E
R
H...F
G1
SF
TF
NF
V
H...U
C1
H
O2
F
S
Q
M
N
J
O1
M1
M2
P1
J1
P
N1
FA
FB
FC
FD

3.1 REDUCERS/GEARED MOTORS

H.../F/U	D	B	b	t	f	C	C1	E	F	G	G1
H032/H033	1 0/-0,0005	1,97	0,25	1,11	3/8-16	0,98	1,34	5,12	6,65	5,55	5,91
H042/H043	1,25 0/-0,0005	2,36	0,25	1,36	1/2-13	1,18	1,18	6,5	7,44	5,98	5,98
H052/H053	1,375 0/-0,0005	2,76	0,3125	1,51	1/2-13	1,18	1,18	6,5	7,56	7,36	7,36
H062/H063	1,625 0/-0,001	3,15	0,375	1,79	5/8-11	1,38	1,38	8,07	9,21	9,29	9,29
H082/H083	2,125 0/-0,001	3,94	0,5	2,35	3/4-10	1,57	1,57	10,24	11,5	10,73	10,73
H102/H103	2,375 0/-0,001	4,72	0,625	2,65	3/4-10	1,57	1,57	12,2	14,33	12,44	12,44
H122/H123	2,875 0/-0,001	5,51	0,75	3,2	3/4-10	1,77	1,77	14,57	15,71	14,82	14,82
H142/H143	3,625 0/-0,001	6,69	0,875	4,01	1-8	1,97	1,97	16,14	19,29	16,93	16,93

H.../F/U	H	I	K	M	N	O	O2	Q	R	S	-V
H032/H033	3,54	0,36	0,59	4,33	5,51	0,43	M8x17 (n.5)	2,36	6,3	0,59	3,62
H042/H043	4,53	0,71	0,59	5,31	6,69	0,55	M8x17 (n.5)	3,35	7,68	0,59	4,53
H052/H053	4,53	1	0,71	5,31	7,28	0,55	M8x17 (n.5)	3,15	7,91	0,71	4,57
H062/H063	5,51	1,22	0,98	6,69	8,66	0,63	M10x20 (n.6)	3,94	10,04	0,79	5,51
H082/H083	7,09	1,22	1,08	8,46	11,02	0,71	M12x25 (n.7)	5,51	12,4	0,98	7,09
H102/H103	8,86	1,4	1,08	9,84	12,99	0,87	M14x28 (n.7)	6,26	14,37	1,18	8,94
H122/H123	9,84	1,87	1,38	11,42	15,98	1,02	M14x30 (n.7)	7,3	17,32	1,38	9,96
H142/H143	12,4	1,77	1,57	13,39	17,72	1,02	M16x32 (n.7)	9,06	19,29	1,38	12,6

....F/U		J	J1	M1	M2	NF	N1	O1	P	P1	SF	TF
H032/H033 H042/H043	FA	45	45	6,50	3,35	5,12	2,76	0,43	6,30	7,87	0,35	0,14
	FB			5,12	3,35	4,33		0,35	6,30	/	0,35	0,14
	FC			4,53	3,35	3,74		0,35	5,51	/	0,35	0,12
	FD			3,94	3,35	3,15		M8	4,72	/	0,35	0,12
H052/H053	FA	45	45	8,46	4,13	7,09	3,54	0,55	7,87	9,84	0,47	0,16
	FB			6,50	4,13	5,12		0,43	7,87	/	0,47	0,14
H062/H063	FA	45	45	10,43	5,12	9,06	4,33	0,55	9,84	11,81	0,59	0,16
	FB			8,46	5,12	7,09		0,55	9,84	/	0,59	0,16
	FC			6,50	5,12	5,12		0,43	7,87	/	0,59	0,14
H082/H083	FA	45	45	11,81	6,50	9,84	5,12	0,71	11,81	13,78	0,63	0,20
	FB			10,43	6,50	9,06		0,55	11,81	/	0,63	0,16
	FC			8,46	6,50	7,09		0,55	9,84	/	0,63	0,16
H102/H103	FA	45	45	13,78	7,28	11,81	5,91	0,71	13,78	15,75	0,71	0,20
	FB			11,81	7,28	9,84		0,71	13,78	/	0,71	0,20
	FC			10,43	7,28	9,06		0,55	11,81	/	0,71	0,16
H122/H123	FB	45	45	13,78	7,87	11,81	6,69	0,71	15,75	/	0,71	0,20
H142/H143	FB	22,5	45	15,75	9,65	13,78	8,27	0,71	17,72	/	0,98	0,20
	FC	45		13,78	9,65	11,81		0,71	15,75	/	0,98	0,20

		G2 H.../F/U			
NEMA	Pm x Dm	H032/H033 H042/H043 H052/H053	H062/H063 H082/H083	H102/H103 H122/H123	H142/H143
56C	6,5"x0,625"	3,74	2,95	/	/
140TC	6,5"x0,875"	3,74	2,95	2,58	/
180TC	9"x1,125"	4,33	3,54	3,17	2,20
210TC	9"x1,375"	/	6,02	5,65	4,69
250TC	9"x1,625"	/	6,02	5,65	4,69
280TC	11"x1,875"	/	/	6,89	5,93
320TC	13,375"x2,125"	/	/	7,03	6,28
360TC	13,375"x2,375"	/	/	/	6,28

NEMA	Pm	Dm	tm	bm
56C	6,69	0,625	0,71	0,1875
140TC	6,69	0,875	0,97	0,1875
180TC	9,06	1,125	1,24	0,2500
210TC	9,06	1,375	1,52	0,3125
250TC	9,06	1,625	1,80	0,3750
280TC	11,02	1,875	2,10	0,5000
320TC	13,39	2,125	2,35	0,5000
360TC	13,39	2,375	2,65	0,6250

3.1.15 CH..2/3

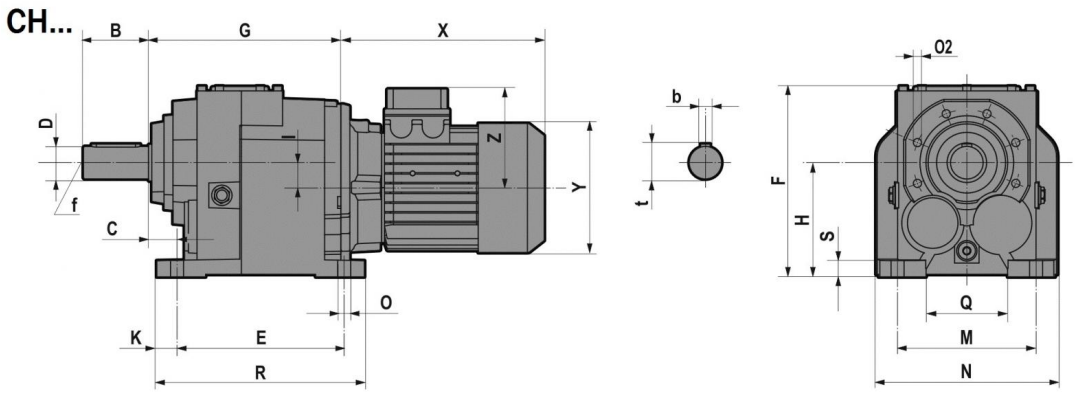

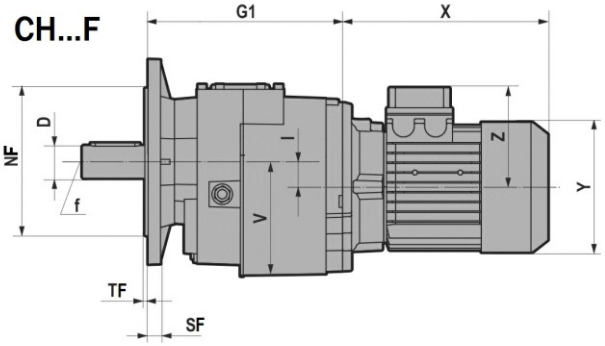

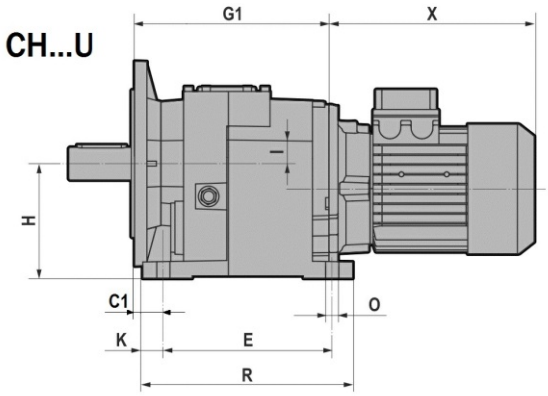

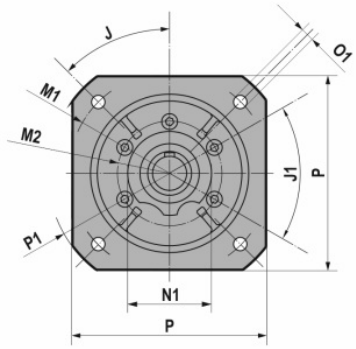

FA

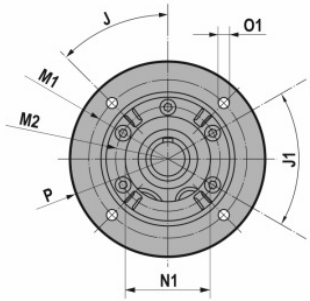

FB

FC

FD

3.1 REDUCERS/GEARED MOTORS

CH.../F/U	D	B	b	t	f	C	C1	E	F	G	G1
CH032/CH033	1 0/-0,0005	1,97	0,25	1,11	3/8-16	0,98	1,34	5,12	6,65	5,55	5,91
CH042/CH043	1,25 0/-0,0005	2,36	0,25	1,36	1/2-13	1,18	1,18	6,5	7,44	5,98	5,98
CH052/CH053	1,375 0/-0,0005	2,76	0,3125	1,51	1/2-13	1,18	1,18	6,5	7,56	7,36	7,36
CH062/CH063	1,625 0/-0,001	3,15	0,375	1,79	5/8-11	1,38	1,38	8,07	9,21	9,29	9,29
CH082/CH083	2,125 0/-0,001	3,94	0,5	2,35	3/4-10	1,57	1,57	10,24	11,5	10,73	10,73
CH102/CH103	2,375 0/-0,001	4,72	0,625	2,65	3/4-10	1,57	1,57	12,2	14,33	12,44	12,44
CH122/CH123	2,875 0/-0,001	5,51	0,75	3,2	3/4-10	1,77	1,77	14,57	15,71	14,82	14,82
CH142/CH143	3,625 0/-0,001	6,69	0,875	4,01	1-8	1,97	1,97	16,14	19,29	16,93	16,93

CH.../F/U	H	I	K	M	N	O	O2	Q	R	S	-V
CH032/CH033	3,54	0,36	0,59	4,33	5,51	0,43	M8x17 (n.5)	2,36	6,3	0,59	3,62
CH042/CH043	4,53	0,71	0,59	5,31	6,69	0,55	M8x17 (n.5)	3,35	7,68	0,59	4,53
CH052/CH053	4,53	1	0,71	5,31	7,28	0,55	M8x17 (n.5)	3,15	7,91	0,71	4,57
CH062/CH063	5,51	1,22	0,98	6,69	8,66	0,63	M10x20 (n.6)	3,94	10,04	0,79	5,51
CH082/CH083	7,09	1,22	1,08	8,46	11,02	0,71	M12x25 (n.7)	5,51	12,4	0,98	7,09
CH102/CH103	8,86	1,4	1,08	9,84	12,99	0,87	M14x28 (n.7)	6,26	14,37	1,18	8,94
CH122/CH123	9,84	1,87	1,38	11,42	15,98	1,02	M14x30 (n.7)	7,3	17,32	1,38	9,96
CH142/CH143	12,4	1,77	1,57	13,39	17,72	1,02	M16x32 (n.7)	9,06	19,29	1,38	12,6

....F/U		J	J1	M1	M2	NF	N1	O1	P	P1	SF	TF
CH032/CH033 CH042/CH043	FA	45	45	6,50	3,35	5,12	2,76	0,43	6,30	7,87	0,35	0,14
	FB			5,12	3,35	4,33		0,35	6,30	/	0,35	0,14
	FC			4,53	3,35	3,74		0,35	5,51	/	0,35	0,12
	FD			3,94	3,35	3,15		M8	4,72	/	0,35	0,12
CH052/CH053	FA	45	45	8,46	4,13	7,09	3,54	0,55	7,87	9,84	0,47	0,16
	FB			6,50	4,13	5,12		0,43	7,87	/	0,47	0,14
CH062/CH063	FA	45	45	10,43	5,12	9,06	4,33	0,55	9,84	11,81	0,59	0,16
	FB			8,46	5,12	7,09		0,55	9,84	/	0,59	0,16
	FC			6,50	5,12	5,12		0,43	7,87	/	0,59	0,14
CH082/CH083	FA	45	45	11,81	6,50	9,84	5,12	0,71	11,81	13,78	0,63	0,20
	FB			10,43	6,50	9,06		0,55	11,81	/	0,63	0,16
	FC			8,46	6,50	7,09		0,55	9,84	/	0,63	0,16
CH102/CH103	FA	45	45	13,78	7,28	11,81	5,91	0,71	13,78	15,75	0,71	0,20
	FB			11,81	7,28	9,84		0,71	13,78	/	0,71	0,20
	FC			10,43	7,28	9,06		0,55	11,81	/	0,71	0,16
CH122/CH123	FB	45	45	13,78	7,87	11,81	6,69	0,71	15,75	/	0,71	0,20
CH142/CH143	FB	22,5	45	15,75	9,65	13,78	8,27	0,71	17,72	/	0,98	0,20
	FC	45		13,78	9,65	11,81		0,71	15,75	/	0,98	0,20

T (IE1 - IE2)										
		063	071	080	090S	090L	100	112	132S	132M/L
CH032/CH033 CH042/CH043 CH052/CH053	X	8,5	9,5	10,5	11,6	12,6	13,1	13,8	/	/
	Y	4,8	5,5	6,2	6,8	6,8	7,5	8,3	/	/
	Z	4,1	4,4	4,8	5,1	5,1	5,5	6,1	/	/
CH062/CH063 CH082/CH083	X	/	8,7	9,8	10,9	11,8	13,2	14	15,9	17,4
	Y	/	5,5	6,2	6,8	6,8	7,5	8,3	9,8	9,8
	Z	/	4,4	4,8	5,1	5,1	5,5	6,1	7,6	7,6
CH102/CH103 CH122/CH123	X	/	/	/	10,5	11,5	12,8	13,7	15,6	17,1
	Y	/	/	/	6,8	6,8	7,5	8,3	9,8	9,8
	Z	/	/	/	5,1	5,1	5,5	6,1	7,6	7,6

TB (IE1 - IE2)										
		063	071	080	090S	090L	100	112	132S	132M/L
CH032/CH033 CH042/CH043 CH052/CH053	X	10,7	12,1	13,4	14,7	15,7	16,3	17,6	/	/
	Y	4,8	5,5	6,2	6,8	6,8	7,5	8,3	/	/
	Z	4,7	5,1	5,4	6,2	6,2	6,6	7,2	/	/
CH062/CH063 CH082/CH083	X	/	11,3	12,6	13,9	14,9	16,4	17,8	19,9	21,5
	Y	/	5,5	6,2	6,8	6,8	7,5	8,3	9,8	9,8
	Z	/	5,1	5,4	6,2	6,2	6,6	7,2	9,1	9,1
CH102/CH103 CH122/CH123	X	/	/	/	13,5	14,5	16	17,4	19,5	21,1
	Y	/	/	/	6,8	6,8	7,5	8,3	9,8	9,8
	Z	/	/	/	6,2	6,2	6,6	7,2	9,1	9,1

3.1.16 IH..2/3

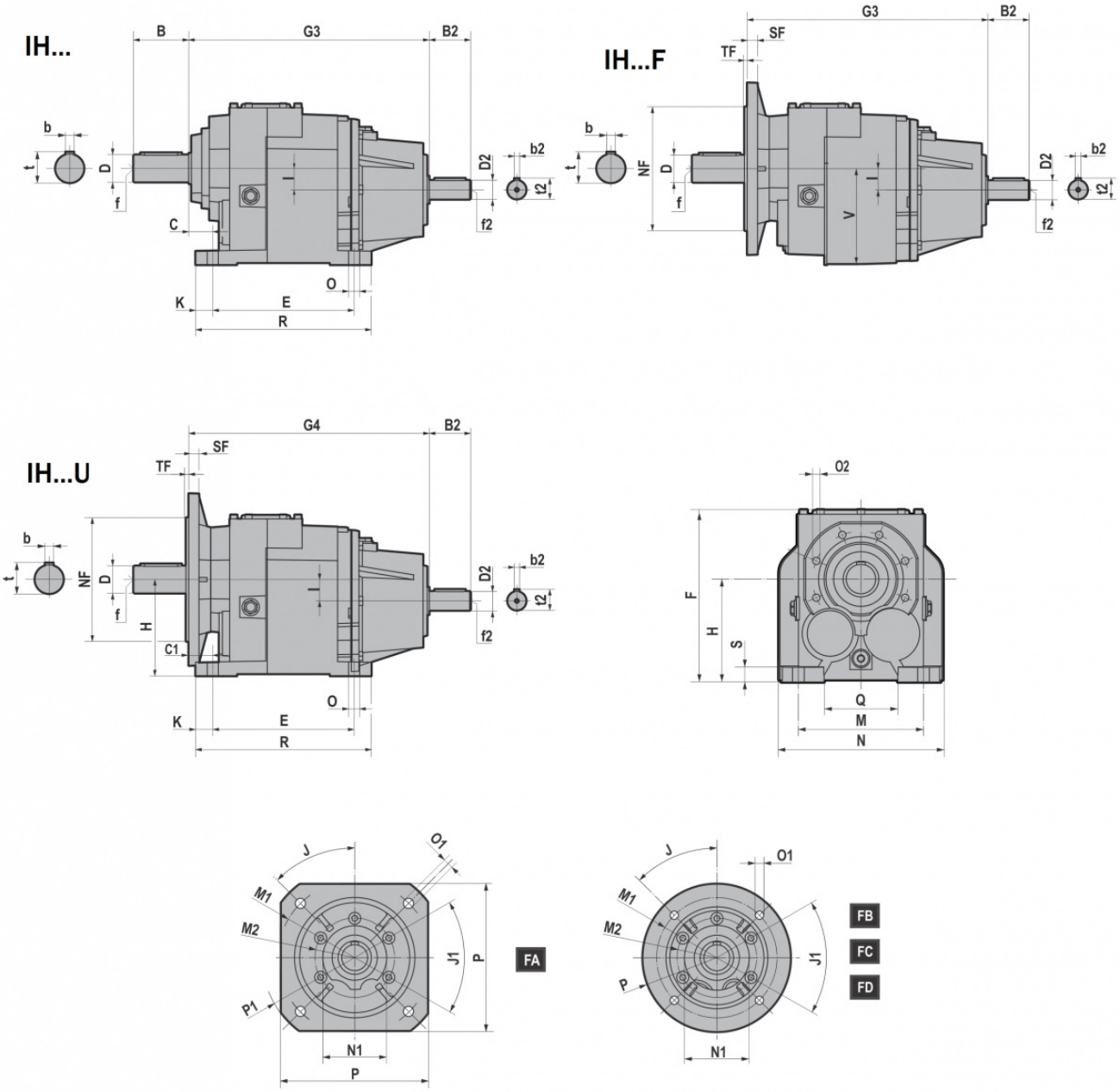
IH...
B
G3
B2
b
t
D
f
C
l
D2
b2
t2
f2
O
K
E
R
IH...F
SF
TF
NF
V
IH...U
G4
H
C1
O2
F
S
Q
M
N
J
O1
M1
M2
P1
J1
P
N1
FA
FB
FC
FD

IH.../F/U	D	B	b	t	f	C	C1	E	F	G	G1
IH032/IH033	1 0/-0,0005	1,97	0,25	1,11	3/8-16	0,98	1,34	5,12	6,65	5,55	5,91
IH042/IH043	1,25 0/-0,0005	2,36	0,25	1,36	1/2-13	1,18	1,18	6,5	7,44	5,98	5,98
IH052/IH053	1,375 0/-0,0005	2,76	0,3125	1,51	1/2-13	1,18	1,18	6,5	7,56	7,36	7,36
IH062/IH063	1,625 0/-0,001	3,15	0,375	1,79	5/8-11	1,38	1,38	8,07	9,21	9,29	9,29
IH082/IH083	2,125 0/-0,001	3,94	0,5	2,35	3/4-10	1,57	1,57	10,24	11,5	10,73	10,73
IH102/IH103	2,375 0/-0,001	4,72	0,625	2,65	3/4-10	1,57	1,57	12,2	14,33	12,44	12,44
IH122/IH123	2,875 0/-0,001	5,51	0,75	3,2	3/4-10	1,77	1,77	14,57	15,71	14,82	14,82
IH142/IH143	3,625 0/-0,001	6,69	0,875	4,01	1-8	1,97	1,97	16,14	19,29	16,93	16,93

IH.../F/U	H	I	K	M	N	O	O2	Q	R	S	-V
IH032/IH033	3,54	0,36	0,59	4,33	5,51	0,43	M8x17 (n.5)	2,36	6,3	0,59	3,62
IH042/IH043	4,53	0,71	0,59	5,31	6,69	0,55	M8x17 (n.5)	3,35	7,68	0,59	4,53
IH052/IH053	4,53	1	0,71	5,31	7,28	0,55	M8x17 (n.5)	3,15	7,91	0,71	4,57
IH062/IH063	5,51	1,22	0,98	6,69	8,66	0,63	M10x20 (n.6)	3,94	10,04	0,79	5,51
IH082/IH083	7,09	1,22	1,08	8,46	11,02	0,71	M12x25 (n.7)	5,51	12,4	0,98	7,09
IH102/IH103	8,86	1,4	1,08	9,84	12,99	0,87	M14x28 (n.7)	6,26	14,37	1,18	8,94
IH122/IH123	9,84	1,87	1,38	11,42	15,98	1,02	M14x30 (n.7)	7,3	17,32	1,38	9,96
IH142/IH143	12,4	1,77	1,57	13,39	17,72	1,02	M16x32 (n.7)	9,06	19,29	1,38	12,6

....F/U		J	J1	M1	M2	NF	N1	O1	P	P1	SF	TF
IH032/IH033 IH042/IH043	FA	45	45	6,50	3,35	5,12	2,76	0,43	6,30	7,87	0,35	0,14
	FB			5,12	3,35	4,33		0,35	6,30	/	0,35	0,14
	FC			4,53	3,35	3,74		0,35	5,51	/	0,35	0,12
	FD			3,94	3,35	3,15		M8	4,72	/	0,35	0,12
IH052/IH053	FA	45	45	8,46	4,13	7,09	3,54	0,55	7,87	9,84	0,47	0,16
	FB			6,50	4,13	5,12		0,43	7,87	/	0,47	0,14
IH062/IH063	FA	45	45	10,43	5,12	9,06	4,33	0,55	9,84	11,81	0,59	0,16
	FB			8,46	5,12	7,09		0,55	9,84	/	0,59	0,16
	FC			6,50	5,12	5,12		0,43	7,87	/	0,59	0,14
IH082/IH083	FA	45	45	11,81	6,50	9,84	5,12	0,71	11,81	13,78	0,63	0,20
	FB			10,43	6,50	9,06		0,55	11,81	/	0,63	0,16
	FC			8,46	6,50	7,09		0,55	9,84	/	0,63	0,16
IH102/IH103	FA	45	45	13,78	7,28	11,81	5,91	0,71	13,78	15,75	0,71	0,20
	FB			11,81	7,28	9,84		0,71	13,78	/	0,71	0,20
	FC			10,43	7,28	9,06		0,55	11,81	/	0,71	0,16
IH122/IH123	FB	45	45	13,78	7,87	11,81	6,69	0,71	15,75	/	0,71	0,20
IH142/IH143	FB	22,5	45	15,75	9,65	13,78	8,27	0,71	17,72	/	0,98	0,20
	FC	45		13,78	9,65	11,81		0,71	15,75	/	0,98	0,20

	G3	G4	B2	D2	b2	t2	f2
IH032/IH033	9,09	9,45	1,97	0,625 0/-0,0005	0,1875	0,7	1/4-20
IH042/IH043	9,53	9,53	1,97	0,625 0/-0,0005	0,1875	0,7	1/4-20
IH052/IH053	10,91	10,91	1,97	0,625 0/-0,0005	0,1875	0,7	1/4-20
IH062/IH063	13,74	13,74	2,76	1,375 0/-0,0005	0,3125	1,51	1/2-13
IH082/IH083	15,18	15,18	2,76	1,375 0/-0,0005	0,3125	1,51	1/2-13
IH102/IH103	17,42	17,42	3,15	1,625 0/-0,001	0,375	1,79	5/8-11
IH122/IH123	19,80	19,80	3,15	1,625 0/-0,001	0,375	1,79	5/8-11
IH142/IH143	22,44	22,44	3,15	1,625 0/-0,001	0,375	1,79	5/8-11

3.2.1 Electric motors

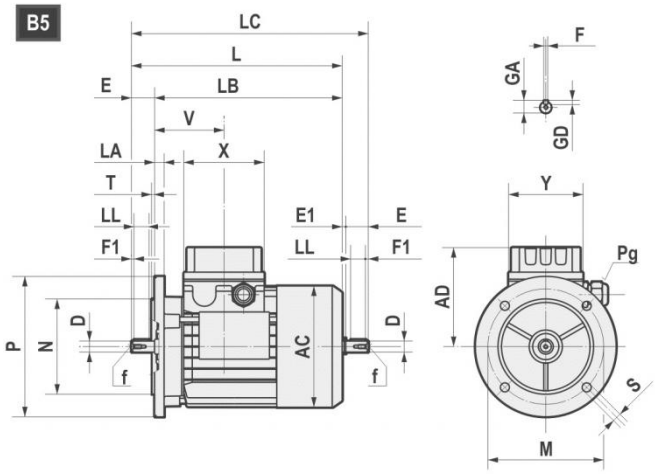

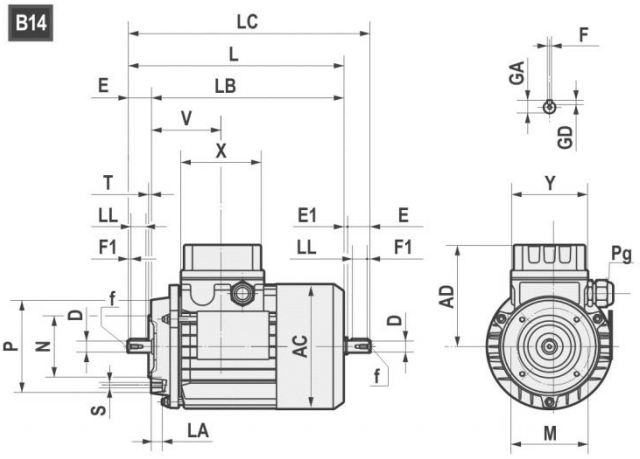

	AC	AD	L	LB	LC	X	Y	V	D	E	E1	f	F1	GA	F	GD
063	121	104	211	188	235,5	80	74	69	11 j6	23	1,5	M4x10	2,5	12,5	4	4
071	139	112	238,5	208,5	271	80	74	74,5	14 j6	30	2,5	M5x12.5	3	16	5	5
080	158	122	272,5 *(296)	232,5 *(256)	314 *(337)	80	74	78	19 j6	40	1,5	M6x16	5	21,5	6	6
90S	173	146	298 *(331)	248 *(281)	349,5 *(381)	98	98	89,5	24 j6	50	1,5	M8x19	5	27	8	7
90L	173	146	323 *(356)	273 *(306)	374,5 *(408)	98	98	89,5	24 j6	50	1,5	M8x19	5	27	8	7
100	191	155	368	308	431,5	98	98	97,5	28 j6	60	3,5	M10x22	7,5	31	8	7
112	211	170	382,5 *(408)	322,5 *(348)	447 *(472)	98	98	100	28 j6	60	3,5	M10x22	7,5	31	8	7
132S	249	195	452	372	536,5	118	118	115,5	38 k6	80	4	M12x28	10	41	10	8
132L	249	195	490	410	574,5	118	118	115,5	38 k6	80	4	M12x28	10	41	10	8
160S	249	195	520	410	/	118	118	115,5	42k6	100	/	M16x36	10	45	12	8

*TP80B4,TP90S4, TP90L4, TP90S6, TP112M4, TP112M6

B5	M	N	P	LA	S	T
063	115	95	140	10	9	3
071	130	110	160	10	9,5	3,5
080	165	130	200	12	11	3,5
090	165	130	200	12	11	3,5
100	215	180	250	15	14	4
112	215	180	250	14,5	14	4
132	265	230	300	20	14	3,5
160	300	250	350	13	18,5	3,5

B14	M	N	P	LA	S	T
063	75	60	90	10	M5	2,5
071	85	70	105	10,5	M6	2,5
080	100	80	120	10,5	M6	3
090	115	95	140	11,5	M8	3
100	130	110	160	15	M8	3,5
112	130	110	160	11,5	M8	3,5
132	165	130	200	20,5	M10	3,5
160	215	180	250	-	M12	4

All dimensions are in mm

3.2 ELECTRIC MOTORS

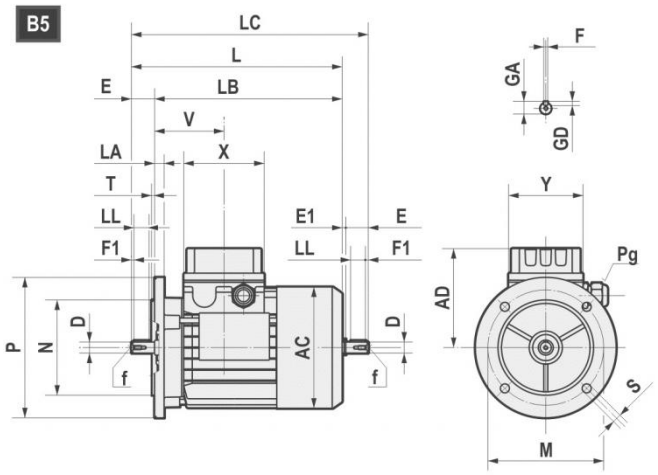

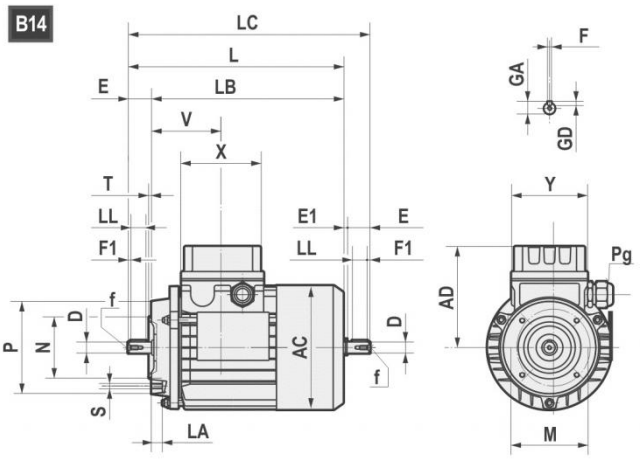

		AC	AD	L	LB	X	D	E	f	GA	F	GD	LL	Pg	
160M	2-4-6	314	251	600	490	158	42	110	M16	45	12	8	90	2-M40x1,5	1-M16x1,5
160L	2-4-6	314	251	645	535	158	42	110	M16	45	12	8	90	2-M40x1,5	1-M16x1,5
180M	2-4	355	267	680	570	158	48	110	M16	51,5	14	9	100	2-M40x1,5	1-M16x1,5
180L	4-6	355	267	720	610	158	48	110	M16	51,5	14	9	100	2-M40x1,5	1-M16x1,5
200L	2-4-6	397	300	785	675	187	55	110	M20	59	16	10	100	2-M50x1,5	1-M16x1,5
225S	4	446	325	820	680	187	60	140	M20	64	18	11	125	2-M50x1,5	1-M16x1,5
225M	2	446	325	815	705	187	55	110	M20	59	16	10	100	2-M50x1,5	1-M16x1,5
225M	4-6	446	325	845	705	187	60	140	M20	64	18	11	125	2-M50x1,5	1-M16x1,5
250M	2-4-6	485	360	910	770	238	60	140	M20	64	18	11	125	2-M63x1,5	1-M16x1,5
250M	2-4-6	485	360	910	770	238	65	140	M20	69	18	11	125	2-M63x1,5	1-M16x1,5
280S	2-4-6	547	390	970	830	238	65	140	M20	69	18	11	125	2-M63x1,5	1-M16x1,5
280S	2-4-6	547	390	970	830	238	75	140	M20	79,5	20	12	125	2-M63x1,5	1-M16x1,5
280M	2-4-6	547	390	1025	885	238	65	140	M20	69	18	11	125	2-M63x1,5	1-M16x1,5
280M	2-4-6	547	390	1025	885	238	75	140	M20	79,5	20	12	125	2-M63x1,5	1-M16x1,5

B5	M	N	P	LA	S	T
160	300	250	350	13	19	5
180	300	250	350	15	19	5
200	350	300	400	17	19	5
225	400	350	450	20	19	5
250	500	450	550	22	19	5
280	500	450	550	22	19	5

All dimensions are in mm

3.2.2 Nominal power - [HP]

	63A	63B	63C	71A	71B	71C	80A			80B		
Poles	TS	TS	TS	TS	TS	TS	TS	TH	TP	TS	TH	TP
2	0,24	0,34	0,5	0,5	0,75	-	-	1	1	-	1,5	1,5
4	0,16	0,24	0,3	0,34	0,5	0,75	0,75	-	-	-	1	1
6	0,12	0,16	0,2	0,24	0,34	0,5	0,5	-	-	0,75	-	-

	90S		90L		100LR	100L	100LA		112MR	112MS	112MA	112M
Poles	TH	TP	TH	TP	TP	TP	TH	TP	TP	TP	TH	TP
2	2	2	3	3	-	4	4	-	-	-	5,4	5,4
4	1,5	1,5	2	2	-	-	3	3	3	4	5,4	5,4
6	-	1	1	-	1,5	2	1,5	-	-	-	3	3

	112MR	112MS	132S	132SA	132MS	132SB	132M	132MA		132MB	
Poles	TP	TP	TP	TH	TP	TH	TP	TH	TP	TH	TP
2	-	-	7,5	7,5	-	10	10	12,5	-	-	-
4	3	4	-	7,5	7,5	-	10	10	-	12,5	-
6	-	-	4	4	-	-	-	5,4	5,4	7,5	7,5

	160M	160MA	160MB	160L	160LA	180M	180L
Poles	TP	TP	TP	TP	TP	TP	TP
2	-	15	20	25	-	30	-
4	-	15	-	-	20	25	30
6	10	-	-	15	-	-	20

	200L	200LA	200LB	225S	225M	250M	280S	280M
Poles	TP	TP	TP	TP	TP	TP	TP	TP
2	-	40	50	-	-	-	-	-
4	40	-	-	50	60	74	101	121
6	-	25	30	-	-	-	-	-

3.3 WEIGHT

The values reported in the tables are referred to the weight of the gearbox with lubricant excluded.
*Weight without motor.

* H-PH	063	071	080	56C	140TC	180TC	210TC	250TC	280TC	320TC	360TC	
A31	4,2	4,4	4,8	/	/	/	/	/	/	/	/	~ lb
A32	/	/	/	9,5	10,1	/						
A33	/	/	/	10,6	/	/	/	/	/	/	/	
A41	/	/	/	6,8	7,7	/	/	/	/	/	/	
A42	/	/	/	11,7	12,1	/	/	/	/	/	/	
A43	/	/	/	13,2	-	/	/	/	/	/	/	
A51	/	/	/	9,2	9,9	/	/	/	/	/	/	
A52	/	/	/	20,9	22	28,6	/	/	/	/	/	
A53	/	/	/	22	22,4	/	/	/	/	/	/	
A61	/	/	/	14,5	15	15,4	/	/	/	/	/	
A62	/	/	/	24,9	26	32,6	/	/	/	/	/	
A63	/	/	/	27,7	29		/	/	/	/	/	
032-033	/	/	/	18,4	19,3	20,6	/	/	/	/	/	
042-043	/	/	/	24	24,9	26,2	/	/	/	/	/	
41	/	/	/	9,6	10,5	11,8	/	/	/	/	/	
052-053	/	/	/	35,3	36,2	37,5	/	/	/	/	/	
51	/	/	/	13,8	14,7	16	/	/	/	/	/	
062-063	/	/	/	63,1	64	68,6	73,3	/	/	/	/	
61	/	/	/	18,2	19,1	20,4	/	/	/	/	/	
082-083	/	/	/	111,8	111,6	116,8	121,4	125,8	/	/	/	
81	/	/	/	40,3	40,1	45,3	49,7	55,4	/	/	/	
102-103	/	/	/	/	181,4	186,6	191,6	197,8	211	/	/	
101	/	/	/	/	/	63,9	78,8	84,9	/	/	/	
121	/	/	/	/	/	/	90,5	90,2	103,4	/	/	
122-123	/	/	/	/	/	250,6	265,5	271,7	284,9	317,9	/	
142-143	/	/	/	/	/	414,6	428,6	433,6	451	482,2	486,2	

IH	~ lb
A32	9,5
A33	11
A41	7,3
A42	11,4
A43	12,8
A51	9,2
A52	20,7
A53	21,8
A61	14,3
A62	24,6
A63	28,4
032-033	25,3
042-043	30,9
41	16,4
052-053	42,1
51	20,6
062-063	77,4
61	25
082-083	125,6
81	53,9
102-103	208,3
101	95,5
121	100,8
122-123	282,3
142-143	466,8

3.3 WEIGHT

	TS									
CH	063	071	080	090S	090L	100	112	132S	132M	
A32	15,2	19,2	28	/	/	/	/	/	/	~ lb
A33	16,8	21	29,8	/	/	/	/	/	/	
A41	13	17,2	26	/	/	/	/	/	/	
A42	17,1	21,3	30,1	34,3	39,8	/	/	/	/	
A43	18,4	22,6	31,4	35,6	41,1	/	/	/	/	
A51	13,6	17,8	26,6	30,8	36,3	/	/	/	/	
A52	/	/	38	42,2	47,7	57,8	80,5	/	/	
A53	26,5	30,6	39,5	43,7	49,2	/	/	/	/	
A61	/	/	31,6	35,8	41,3	51,5	74,2	/	/	
A62	/	/	42,3	46,5	52	62,2	84,9	/	/	
A63	32,1	36,3	45,1	49,3	54,8	/	/	/	/	
032-033	26,2	28,2	38,5	47,1	51,6	63,7	89	/	/	
042-043	31,8	33,8	44,1	52,7	57,2	69,3	94,6	/	/	
41	/	19,3	29,7	38,3	42,7	/	/	/	/	
052-053	43,1	45,1	55,4	64	68,4	80,6	105,9	/	/	
51	/	23,5	33,9	42,5	46,9	59	84,4	/	/	
062-063	/	72,1	83,3	88,6	91,9	103,2	128,3	159,2	184,7	
61	/	/	38,3	46,9	51,3	63,4	88,8	/	/	
082-083	/	/	131,6	136,9	140,2	151,5	176,6	207,5	233	
81	/	/	59,7	65	68,3	79,6	104,7	135,6	161,2	
102-103	/	/	/	206,8	209	222,2	244,3	277,3	297,2	
101	/	/	/	/	/	109,3	131,4	164,5	184,3	
121	/	/	/	/	/	/	/	169,8	189,6	
122-123	/	/	/	/	/	296,5	318,6	351,6	371,5	

	TH							
CH	080	090S	090L	100	112	132S	132M	
A32	31,7	/	/	/	/	/	/	~ lb
A33	33,5	/	/	/	/	/	/	
A41	29,7	/	/	/	/	/	/	
A42	33,9	39,5	44,2	/	/	/	/	
A43	35,2	40,8	45,5	/	/	/	/	
A51	30,4	36	40,6	/	/	/	/	
A52	41,7	47,3	52	62,9	87,3	/	/	
A53	43,2	48,8	53,5	/	/	/	/	
A61	35,4	41	45,6	56,5	81	/	/	
A62	46,1	51,7	56,3	67,2	91,7	/	/	
A63	48,8	54,4	59,1	/	/	/	/	
032-033	42,3	52,3	55,9	68,7	95,8	/	/	
042-043	47,9	57,9	61,5	74,4	101,4	/	/	
41	33,4	43,4	47	/	/	/	/	
052-053	59,2	69,2	72,8	85,6	112,7	/	/	
51	37,6	47,7	51,2	64,1	91,2	/	/	
062-063	87,1	93,8	96,3	108,2	135,1	170,8	199,8	
61	42	52,1	55,6	68,5	95,6	/	/	
082-083	135,4	142,1	144,5	156,5	183,4	219,1	248,1	
81	63,5	70,2	72,7	84,7	111,5	147,3	176,2	
102-103	/	212	213,3	227,3	251,1	289	312,2	
101	/	/	/	114,4	138,2	176,1	199,4	
121	/	/	/	/	/	181,4	204,6	
122-123	/	/	/	301,6	325,4	363,3	386,5	

	TBS									
CH	063	071	080	090S	090L	100	112	132S	132M	
A32	18,1	23,4	34,8	/	/	/	/	/	/	~ lb
A33	19,7	25,2	36,6	/	/	/	/	/	/	
A41	15,8	21,3	32,8	/	/	/	/	/	/	
A42	20	25,5	37	45,1	50,6	/	/	/	/	
A43	21,3	26,8	38,3	46,4	51,9	/	/	/	/	
A51	16,5	22	33,5	41,6	47,1	/	/	/	/	
A52	/	/	44,8	53,6	58,5	68,6	98,8	/	/	
A53	29,3	34,8	46,3	54,5	60	/	/	/	/	
A61	/	/	38,5	46,6	52,1	62,3	92,5	/	/	
A62	/	/	49,2	57,3	62,8	73	103,2	/	/	
A63	34,9	40,5	51,9	60,1	65,6	/	/	/	/	
032-033	29,5	33	46,3	59,3	63,7	75,8	110,4	/	/	
042-043	35,1	38,6	51,9	64,9	69,3	81,4	116	/	/	
41	/	24,1	37,4	50,4	54,8	/	/	/	/	
052-053	46,4	49,9	63,2	76,2	80,6	92,7	127,3	/	/	
51	/	28,4	41,6	54,6	59	71,2	105,8	/	/	
062-063	/	76,9	91,1	100,8	104,1	115,3	149,7	181,9	217,2	
61	/	/	46	59	63,4	75,6	110,2	/	/	
082-083	/	/	139,3	149	152,3	163,6	198	230,2	265,4	
81	/	/	67,5	77,2	80,5	91,7	126,1	158,3	193,6	
102-103	/	/	/	219,1	221,3	234,6	265,9	300,3	329,8	
101	/	/	/	/	/	121,3	152,8	187,4	216,7	
121	/	/	/	/	/	/	/	192,5	222	
122-123	/	/	/	/	/	308,6	340	374,3	403,9	

	TBH							
CH	080	090S	090L	100	112	132S	132M	
A32	38,6	/	/	/	/	/	/	~ lb
A33	40,4	/	/	/	/	/	/	
A41	36,6	/	/	/	/	/	/	
A42	40,7	50,2	55,1	/	/	/	/	
A43	42	51,5	56,4	/	/	/	/	
A51	37,2	46,7	51,5	/	/	/	/	
A52	48,6	58,7	62,9	76,8	105,7	/	/	
A53	50	59,5	64,4	/	/	/	/	
A61	42,2	51,7	56,5	70,4	99,3	/	/	
A62	52,9	62,4	67,2	81,1	110	/	/	
A63	55,7	65,2	70	/	/	/	/	
032-033	50	64,3	68,1	84	117,3	/	/	
042-043	55,6	69,9	73,7	89,6	122,9	/	/	
41	41,1	55,5	59,2	/	/	/	/	
052-053	66,9	81,2	85	100,9	134,1	/	/	
51	45,4	59,7	63,4	79,3	112,6	/	/	
062-063	94,8	105,8	108,5	123,5	156,5	193,6	231,5	
61	49,8	64,1	67,8	83,7	117	/	/	
082-083	143,1	154,1	156,7	171,7	204,8	241,8	279,8	
81	71,2	82,2	84,9	99,9	132,9	170	207,9	
102-103	/	224,2	225,8	242,7	272,7	312	344,1	
101	/	/	/	129,4	159,6	199,1	231	
121	/	/	/	/	/	204,1	236,3	
122-123	/	/	/	316,8	346,8	386	418,2	

4.1 BACKSTOP DEVICE

The gear reducer can be supplied with backstop device on input shaft. Backstop device allows output shaft rotation in only one sense of direction; according to the size, it is available in the input flange or in the motor with the same dimensions. It is important to specify the required sense of direction on the order. The backstop device is not available for mounting position V1/V5 with motor size IEC 100...225.

SENSE OF DIRECTION AVAILABLE

H... 1 - **H...** 1F - **H...** 1U - **H...** M - **H...** 3 - **H...** 3F - **H...** 3U

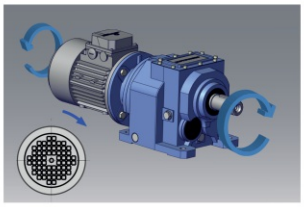

CLOCKWISE SENSE OF DIRECTION REFERRED TO HIGH SPEED SHAFT

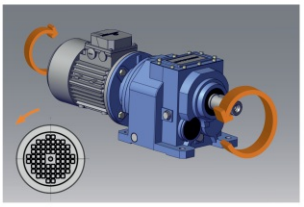

COUNTER CLOCKWISE SENSE OF DIRECTION REFERRED TO HIGH SPEED SHAFT

H... 2 - **H...** 2F - **H...** 2U

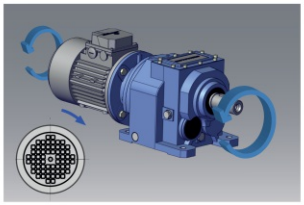

CLOCKWISE SENSE OF DIRECTION REFERRED TO HIGH SPEED SHAFT

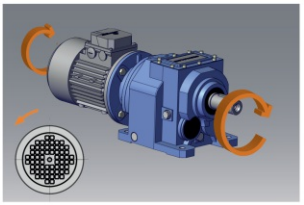

COUNTER CLOCKWISE SENSE OF DIRECTION REFERRED TO HIGH SPEED SHAFT

	063	071	080	090	100-112	132	160	180	200	225
	140x11	160x14	200x19	200x24	250x28	300x38	350x42	350x48	400x55	450x60
H032		B5	B5	B5	B5					
H033	B5	B5	B5	B5						
H041		B5	B5	B5						
H042		B5	B5	B5	B5					
H043	B5	B5	B5	B5						
H051		B5	B5	B5	B5					
H052		B5	B5	B5	B5					
H053	B5	B5	B5	B5						
H061			B5	B5	B5					
H062			B5	B5	B5	B5				
H063		B5	B5	B5	B5					
H081			B5	B5	B5	B5				
H082			B5	B5	B5	B5	B5			
H083			B5	B5	B5	B5				
H101					B5	B5	B5	B5		
H102					B5	B5	B5	B5		
H103				B5	B5	B5	B5			
H121						B5	B5	B5	B5	
H122						B5	B5	B5	B5	
H123					B5	B5	B5	B5	B5	
H142							B5	B5	B5	B5
H143						B5	B5	B5	B5	

Dimensions are only in mm.

4.2 REINFORCED OIL SEALS FOR OUTPUT SHAFT

The reinforced seal can be done depending on the gearbox size by means of two oil seals or through the standard oil seal with VRM ring. The difference of the two solutions is explained on the drawings.
The helical gear reducers from size 060 to size 140 (except for single stage) in V1/ V5 mounting position, are already equipped with 2 oil seals as standard.
On request the gear reducer can be supplied with fluoroelastomer FPM (FKM) seals.

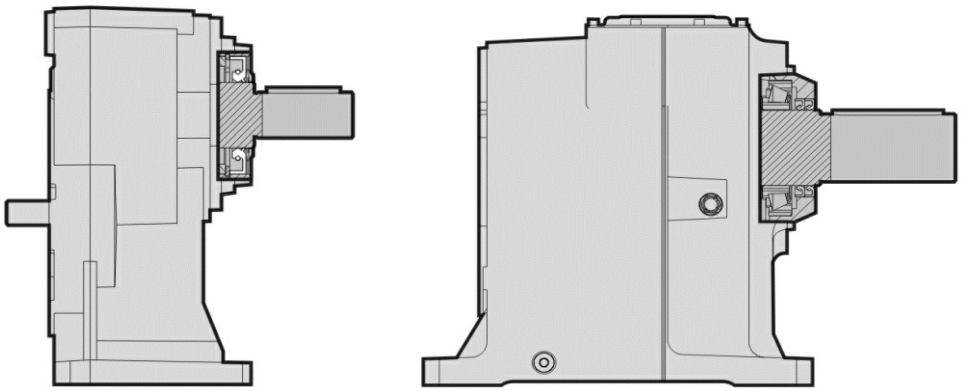

	Double oil seal	VRM ring
H041		x
H051		x
H061		x
H081		x
H101		x
H121		x
H032/3		x
H042/3		x
H052/3		x
H062/3	x	
H082/3	x	
H102/3	x	
H122/3	x	
H142/3	x	

0.16 HP

Output speed [rpm]	Service factor sf	Output torque [in-lbs]	Exact ratio i	Max. torque [in-lbs]	OHL	Gearmotor		Gear Reducer	
					Output shaft [lbs]	Reducer	Motor	Reducer	NEMA C-input
18.0	3.3	541	99.27	1770	1236	**CH033**	63A4	**PH033**	56C
16.0	3.0	589	108.05	1770	1236	**CH033**	63A4	**PH033**	56C
14.0	2.6	674	123.71	1770	1236	**CH033**	63A4	**PH033**	56C
12.0	2.3	781	143.33	1770	1236	**CH033**	63A4	**PH033**	56C
9.8	1.8	973	178.61	1770	1236	**CH033**	63A4	**PH033**	56C
8.9	1.6	1074	197.17	1770	1236	**CH033**	63A4	**PH033**	56C
7.1	1.3	1339	245.70	1770	1236	**CH033**	63A4	**PH033**	56C
14.0	3.9	685	125.69	2655	1484	**CH043**	63A4	**PH043**	56C
12.0	3.4	774	142.04	2655	1484	**CH043**	63A4	**PH043**	56C
11.0	2.9	901	165.38	2655	1484	**CH043**	63A4	**PH043**	56C
8.5	2.4	1117	205.07	2655	1484	**CH043**	63A4	**PH043**	56C
7.7	2.1	1239	227.50	2655	1484	**CH043**	63A4	**PH043**	56C
6.2	1.7	1537	282.10	2655	1484	**CH043**	63A4	**PH043**	56C
8.1	3.8	1179	216.38	4425	1798	**CH053**	63A4	**PH053**	56C
6.5	3.0	1458	267.65	4425	1798	**CH053**	63A4	**PH053**	56C
162.0	2.0	61	10.83	124	207	**HA31**	63A4	**-**	-
40.0	3.2	245	44.10	797	450	**CHA32**	63A4	**HA32**	56C
36.0	2.6	271	48.75	708	450	**CHA32**	63A4	**HA32**	56C
29.0	2.5	338	60.67	841	450	**CHA32**	63A4	**HA32**	56C
34.0	3.2	280	51.32	885	450	**CHA33**	63A4	**HA33**	56C
29.0	2.7	325	59.65	885	450	**CHA33**	63A4	**HA33**	56C
24.0	2.2	394	72.27	885	450	**CHA33**	63A4	**HA33**	56C
19.0	1.8	490	89.94	885	450	**CHA33**	63A4	**HA33**	56C
16.0	1.5	602	110.51	885	450	**CHA33**	63A4	**HA33**	56C
13.0	1.2	729	133.88	885	450	**CHA33**	63A4	**HA33**	56C
162.0	2.9	61	10.83	177	209	**CHA41**	63A4	**HA41**	56C
36.0	3.8	271	48.75	1018	967	**CHA42**	63A4	**HA42**	56C
29.0	3.4	338	60.67	1151	967	**CHA42**	63A4	**HA42**	56C
24.0	3.4	394	72.27	1328	967	**CHA43**	63A4	**HA43**	56C
19.0	2.7	490	89.94	1328	967	**CHA43**	63A4	**HA43**	56C
16.0	2.2	602	110.51	1328	967	**CHA43**	63A4	**HA43**	56C
13.0	1.8	729	133.88	1328	967	**CHA43**	63A4	**HA43**	56C
11.0	1.5	908	166.61	1328	967	**CHA43**	63A4	**HA43**	56C
9.1	1.3	1053	193.30	1328	967	**CHA43**	63A4	**HA43**	56C
7.3	1.0	1311	240.55	1328	967	**CHA43**	63A4	**HA43**	56C
162.0	3.6	61	10.83	221	575	**CHA51**	63A4	**HA51**	56C
13.0	3.5	756	138.71	2655	1349	**CHA53**	63A4	**HA53**	56C
11.0	3.0	888	163.05	2655	1349	**CHA53**	63A4	**HA53**	56C
8.7	2.4	1091	200.27	2655	1349	**CHA53**	63A4	**HA53**	56C
7.4	2.1	1283	235.41	2655	1349	**CHA53**	63A4	**HA53**	56C
6.1	1.7	1552	284.81	2655	1349	**CHA53**	63A4	**HA53**	56C

0.16 HP

Output speed [rpm]	Service factor sf	Output torque [in-lbs]	Exact ratio i	Max. torque [in-lbs]	OHL	Gearmotor		Gear Reducer	
					Output shaft [lbs]	Reducer	Motor	Reducer	NEMA C-input
4.9	1.4	1929	353.98	2655	1349	**CHA53**	63A4	**HA53**	56C
8.7	3.9	1091	200.27	4248	1798	**CHA63**	63A4	**HA63**	56C
7.4	3.3	1283	235.41	4248	1798	**CHA63**	63A4	**HA63**	56C
6.1	2.7	1552	284.81	4248	1798	**CHA63**	63A4	**HA63**	56C
4.9	2.2	1929	353.98	4248	1798	**CHA63**	63A4	**HA63**	56C

0.25 HP

Output speed [rpm]	Service factor sf	Output torque [in-lbs]	Exact ratio i	Max. torque [in-lbs]	OHL	Gearmotor		Gear Reducer	
					Output shaft [lbs]	Reducer	Motor	Reducer	NEMA C-input
26.0	3.2	546	66.78	1770	1236	**CH033**	63B4	**PH033**	56C
23.0	2.9	612	74.84	1770	1236	**CH033**	63B4	**PH033**	56C
18.0	2.2	811	99.27	1770	1236	**CH033**	63B4	**PH033**	56C
16.0	2.0	883	108.05	1770	1236	**CH033**	63B4	**PH033**	56C
14.0	1.8	1011	123.71	1770	1236	**CH033**	63B4	**PH033**	56C
12.0	1.5	1171	143.33	1770	1236	**CH033**	63B4	**PH033**	56C
9.8	1.2	1460	178.61	1770	1236	**CH033**	63B4	**PH033**	56C
8.9	1.1	1611	197.17	1770	1236	**CH033**	63B4	**PH033**	56C
20.0	3.7	711	87.05	2655	1484	**CH043**	63B4	**PH043**	56C
15.0	2.8	936	114.55	2655	1484	**CH043**	63B4	**PH043**	56C
14.0	2.6	1027	125.69	2655	1484	**CH043**	63B4	**PH043**	56C
12.0	2.3	1161	142.04	2655	1484	**CH043**	63B4	**PH043**	56C
11.0	2.0	1351	165.38	2655	1484	**CH043**	63B4	**PH043**	56C
8.5	1.6	1676	205.07	2655	1484	**CH043**	63B4	**PH043**	56C
7.7	1.4	1859	227.50	2655	1484	**CH043**	63B4	**PH043**	56C
6.2	1.2	2305	282.10	2655	1484	**CH043**	63B4	**PH043**	56C
11.0	3.4	1285	157.29	4425	1798	**CH053**	63B4	**PH053**	56C
9.0	2.8	1590	194.56	4425	1798	**CH053**	63B4	**PH053**	56C
8.1	2.5	1768	216.38	4425	1798	**CH053**	63B4	**PH053**	56C
6.5	2.0	2187	267.65	4425	1798	**CH053**	63B4	**PH053**	56C
7.5	3.9	1918	234.67	7523	2698	**-**	-	**PH063**	56C
6.5	3.4	2190	268.00	7523	2698	**-**	-	**PH063**	56C
278.0	3.8	53	6.30	204	172	**HA31**	63B4	**-**	-
222.0	2.9	66	7.88	195	186	**HA31**	63B4	**-**	-
162.0	1.4	91	10.83	124	207	**HA31**	63B4	**-**	-
71.0	3.7	205	24.55	752	379	**CHA32**	63B4	**HA32**	56C
57.0	2.8	255	30.55	708	408	**CHA32**	63B4	**HA32**	56C
49.0	2.7	296	35.44	797	429	**CHA32**	63B4	**HA32**	56C
40.0	2.2	368	44.10	797	450	**CHA32**	63B4	**HA32**	56C
36.0	1.7	407	48.75	708	450	**CHA32**	63B4	**HA32**	56C
29.0	1.7	506	60.67	841	450	**CHA32**	63B4	**HA32**	56C
34.0	2.1	419	51.32	885	450	**CHA33**	63B4	**HA33**	56C

5.1 H/HA GEARED MOTORS

0.25 HP

Output speed [rpm]	Service factor sf	Output torque [in-lbs]	Exact ratio i	Max. torque [in-lbs]	OHL	Gearmotor		Gear Reducer	
					Output shaft [lbs]	Reducer	Motor	Reducer	NEMA C-input
29.0	1.8	488	59.65	885	450	**CHA33**	63B4	**HA33**	56C
24.0	1.5	591	72.27	885	450	**CHA33**	63B4	**HA33**	56C
19.0	1.2	735	89.94	885	450	**CHA33**	63B4	**HA33**	56C
222.0	3.3	66	7.88	221	188	**CHA41**	63B4	**HA41**	56C
162.0	1.9	91	10.83	177	209	**CHA41**	63B4	**HA41**	56C
40.0	3.4	368	44.10	1239	967	**CHA42**	63B4	**HA42**	56C
36.0	2.5	407	48.75	1018	967	**CHA42**	63B4	**HA42**	56C
29.0	2.3	506	60.67	1151	967	**CHA42**	63B4	**HA42**	56C
34.0	3.2	419	51.32	1328	967	**CHA43**	63B4	**HA43**	56C
29.0	2.7	488	59.65	1328	967	**CHA43**	63B4	**HA43**	56C
24.0	2.2	591	72.27	1328	967	**CHA43**	63B4	**HA43**	56C
19.0	1.8	735	89.94	1328	967	**CHA43**	63B4	**HA43**	56C
16.0	1.5	903	110.51	1328	967	**CHA43**	63B4	**HA43**	56C
13.0	1.2	1094	133.88	1328	967	**CHA43**	63B4	**HA43**	56C
162.0	2.4	91	10.83	221	575	**CHA51**	63B4	**HA51**	56C
20.0	3.7	719	88.02	2655	1349	**CHA53**	63B4	**HA53**	56C
16.0	2.9	912	111.61	2655	1349	**CHA53**	63B4	**HA53**	56C
13.0	2.3	1134	138.71	2655	1349	**CHA53**	63B4	**HA53**	56C
11.0	2.0	1333	163.05	2655	1349	**CHA53**	63B4	**HA53**	56C
8.7	1.6	1637	200.27	2655	1349	**CHA53**	63B4	**HA53**	56C
7.4	1.4	1924	235.41	2655	1349	**CHA53**	63B4	**HA53**	56C
6.1	1.1	2328	284.81	2655	1349	**CHA53**	63B4	**HA53**	56C
13.0	3.7	1134	138.71	4248	1798	**CHA63**	63B4	**HA63**	56C
11.0	3.2	1333	163.05	4248	1798	**CHA63**	63B4	**HA63**	56C
8.7	2.6	1637	200.27	4248	1798	**CHA63**	63B4	**HA63**	56C
7.4	2.2	1924	235.41	4248	1798	**CHA63**	63B4	**HA63**	56C
6.1	1.8	2328	284.81	4248	1798	**CHA63**	63B4	**HA63**	56C
4.9	1.5	2893	353.98	4248	1798	**CHA63**	63B4	**HA63**	56C

0.33 HP

Output speed [rpm]	Service factor sf	Output torque [in-lbs]	Exact ratio i	Max. torque [in-lbs]	OHL	Gearmotor		Gear Reducer	
					Output shaft [lbs]	Reducer	Motor	Reducer	NEMA C-input
42.0	3.7	480	41.40	1770	1236	**CH032**	71A4	**PH032**	56C
37.0	3.2	548	47.25	1770	1236	**CH032**	71A4	**PH032**	56C
33.0	2.9	608	53.59	1770	1236	**CH033**	63D4/71A4	**PH033**	56C
26.0	2.3	758	66.78	1770	1236	**CH033**	63D4/71A4	**PH033**	56C
23.0	2.1	849	74.84	1770	1236	**CH033**	63D4/71A4	**PH033**	56C
18.0	1.6	1127	99.27	1770	1236	**CH033**	63D4/71A4	**PH033**	56C
16.0	1.4	1226	108.05	1770	1236	**CH033**	63D4/71A4	**PH033**	56C
14.0	1.3	1404	123.71	1770	1236	**CH033**	63D4/71A4	**PH033**	56C
12.0	1.1	1627	143.33	1770	1236	**CH033**	63D4/71A4	**PH033**	56C

0.33 HP

Output speed [rpm]	Service factor sf	Output torque [in-lbs]	Exact ratio i	Max. torque [in-lbs]	OHL	Gearmotor		Gear Reducer	
					Output shaft [lbs]	Reducer	Motor	Reducer	NEMA C-input
32.0	3.9	629	54.25	2478	1484	**CH042**	71A4	**PH042**	56C
28.0	3.8	702	61.83	2655	1484	**CH043**	63D4/71A4	**PH043**	56C
23.0	3.1	870	76.67	2655	1484	**CH043**	63D4/71A4	**PH043**	56C
20.0	2.7	988	87.05	2655	1484	**CH043**	63D4/71A4	**PH043**	56C
15.0	2.0	1300	114.55	2655	1484	**CH043**	63D4/71A4	**PH043**	56C
14.0	1.9	1427	125.69	2655	1484	**CH043**	63D4/71A4	**PH043**	56C
12.0	1.6	1612	142.04	2655	1484	**CH043**	63D4/71A4	**PH043**	56C
11.0	1.4	1877	165.38	2655	1484	**CH043**	63D4/71A4	**PH043**	56C
8.5	1.1	2328	205.07	2655	1484	**CH043**	63D4/71A4	**PH043**	56C
7.7	1.0	2582	227.50	2655	1484	**CH043**	63D4/71A4	**PH043**	56C
16.0	3.6	1237	108.95	4425	1798	**CH053**	63D4/71A4	**PH053**	56C
13.0	2.9	1530	134.76	4425	1798	**CH053**	63D4/71A4	**PH053**	56C
11.0	2.5	1785	157.29	4425	1798	**CH053**	63D4/71A4	**PH053**	56C
9.0	2.0	2208	194.56	4425	1798	**CH053**	63D4/71A4	**PH053**	56C
8.1	1.8	2456	216.38	4425	1798	**CH053**	63D4/71A4	**PH053**	56C
6.5	1.5	3038	267.65	4425	1798	**CH053**	63D4/71A4	**PH053**	56C
10.0	3.9	1937	170.67	7523	2698	**CH063**	71A4	**PH063**	56C
9.4	3.6	2113	186.18	7523	2698	**CH063**	71A4	**PH063**	56C
8.1	3.1	2443	215.21	7523	2698	**CH063**	71A4	**PH063**	56C
7.5	2.8	2664	234.67	7523	2698	**CH063**	71A4	**PH063**	56C
6.5	2.5	3042	268.00	7523	2698	**CH063**	71A4	**PH063**	56C
415.0	3.8	49	4.21	186	151	**HA31**	63D4/71A4	**-**	-
368.0	3.5	56	4.75	195	157	**HA31**	63D4/71A4	**-**	-
343.0	3.4	60	5.10	204	161	**HA31**	63D4/71A4	**-**	-
321.0	3.2	64	5.45	204	164	**HA31**	63D4/71A4	**-**	-
278.0	2.8	74	6.30	204	172	**HA31**	63D4/71A4	**-**	-
222.0	2.1	92	7.88	195	186	**HA31**	63D4/71A4	**-**	-
106.0	3.7	191	16.49	708	332	**CHA32**	63D4/71A4	**HA32**	56C
86.0	3.4	235	20.26	797	356	**CHA32**	63D4/71A4	**HA32**	56C
71.0	2.6	285	24.55	752	379	**CHA32**	63D4/71A4	**HA32**	56C
57.0	2.0	354	30.55	708	408	**CHA32**	63D4/71A4	**HA32**	56C
49.0	1.9	411	35.44	797	429	**CHA32**	63D4/71A4	**HA32**	56C
40.0	1.6	511	44.10	797	450	**CHA32**	63D4/71A4	**HA32**	56C
36.0	1.3	565	48.75	708	450	**CHA32**	63D4/71A4	**HA32**	56C
29.0	1.2	703	60.67	841	450	**CHA32**	63D4/71A4	**HA32**	56C
34.0	1.5	583	51.32	885	450	**CHA33**	63D4/71A4	**HA33**	56C
29.0	1.3	677	59.65	885	450	**CHA33**	63D4/71A4	**HA33**	56C
24.0	1.1	820	72.27	885	450	**CHA33**	63D4/71A4	**HA33**	56C
222.0	2.4	92	7.88	221	188	**CHA41**	63D4/71A4	**HA41**	56C
162.0	1.4	127	10.83	177	209	**CHA41**	63D4/71A4	**HA41**	56C
57.0	3.5	354	30.55	1239	859	**CHA42**	63D4/71A4	**HA42**	56C

5.1 H/HA GEARED MOTORS

0.33 HP

Output speed [rpm]	Service factor sf	Output torque [in-lbs]	Exact ratio i	Max. torque [in-lbs]	OHL	Gearmotor		Gear Reducer	
					Output shaft [lbs]	Reducer	Motor	Reducer	NEMA C-input
49.0	3.2	411	35.44	1328	903	**CHA42**	63D4/71A4	**HA42**	56C
40.0	2.4	511	44.10	1239	967	**CHA42**	63D4/71A4	**HA42**	56C
36.0	1.8	565	48.75	1018	967	**CHA42**	63D4/71A4	**HA42**	56C
29.0	1.6	703	60.67	1151	967	**CHA42**	63D4/71A4	**HA42**	56C
34.0	2.3	583	51.32	1328	967	**CHA43**	63D4/71A4	**HA43**	56C
29.0	2.0	677	59.65	1328	967	**CHA43**	63D4/71A4	**HA43**	56C
24.0	1.6	820	72.27	1328	967	**CHA43**	63D4/71A4	**HA43**	56C
19.0	1.3	1021	89.94	1328	967	**CHA43**	63D4/71A4	**HA43**	56C
16.0	1.1	1254	110.51	1328	967	**CHA43**	63D4/71A4	**HA43**	56C
222.0	3.8	92	7.88	354	517	**CHA51**	63D4/71A4	**HA51**	56C
162.0	1.7	127	10.83	221	575	**CHA51**	63D4/71A4	**HA51**	56C
28.0	3.6	717	61.87	2567	1349	**-**	-	**HA52**	56C
29.0	3.9	684	60.25	2655	1347	**CHA53**	63D4/71A4	**HA53**	56C
23.0	3.1	850	74.88	2655	1349	**CHA53**	63D4/71A4	**HA53**	56C
20.0	2.7	999	88.02	2655	1349	**CHA53**	63D4/71A4	**HA53**	56C
16.0	2.1	1267	111.61	2655	1349	**CHA53**	63D4/71A4	**HA53**	56C
13.0	1.7	1574	138.71	2655	1349	**CHA53**	63D4/71A4	**HA53**	56C
11.0	1.4	1851	163.05	2655	1349	**CHA53**	63D4/71A4	**HA53**	56C
8.7	1.2	2273	200.27	2655	1349	**CHA53**	63D4/71A4	**HA53**	56C
16.0	3.4	1267	111.61	4248	1798	**CHA63**	63D4/71A4	**HA63**	56C
13.0	2.7	1574	138.71	4248	1798	**CHA63**	63D4/71A4	**HA63**	56C
11.0	2.3	1851	163.05	4248	1798	**CHA63**	63D4/71A4	**HA63**	56C
8.7	1.9	2273	200.27	4248	1798	**CHA63**	63D4/71A4	**HA63**	56C
7.4	1.6	2672	235.41	4248	1798	**CHA63**	63D4/71A4	**HA63**	56C
6.1	1.3	3233	284.81	4248	1798	**CHA63**	63D4/71A4	**HA63**	56C
4.9	1.1	4018	353.98	4248	1798	**CHA63**	63D4/71A4	**HA63**	56C

0.5 HP

Output speed [rpm]	Service factor sf	Output torque [in-lbs]	Exact ratio i	Max. torque [in-lbs]	OHL	Gearmotor		Gear Reducer	
					Output shaft [lbs]	Reducer	Motor	Reducer	NEMA C-input
66.0	3.9	453	26.39	1770	1236	**CH032**	71B4	**PH032**	56C
59.0	3.5	510	29.70	1770	1236	**CH032**	71B4	**PH032**	56C
53.0	3.1	564	32.89	1770	1236	**CH032**	71B4	**PH032**	56C
46.0	2.7	651	37.92	1770	1236	**CH032**	71B4	**PH032**	56C
42.0	2.5	710	41.40	1770	1236	**CH032**	71B4	**PH032**	56C
37.0	2.2	811	47.25	1770	1236	**CH032**	71B4	**PH032**	56C
33.0	2.0	900	53.59	1770	1236	**CH033**	71B4	**PH033**	56C
26.0	1.6	1122	66.78	1770	1236	**CH033**	71B4	**PH033**	56C
23.0	1.4	1257	74.84	1770	1236	**CH033**	71B4	**PH033**	56C
18.0	1.1	1668	99.27	1770	1236	**CH033**	71B4	**PH033**	56C
228.0	3.3	133	7.67	443	225	**CH041**	71B4	**PH041**	56C

0.5 HP

Output speed [rpm]	Service factor sf	Output torque [in-lbs]	Exact ratio i	Max. torque [in-lbs]	OHL	Gearmotor		Gear Reducer	
					Output shaft [lbs]	Reducer	Motor	Reducer	NEMA C-input
200.0	3.2	152	8.75	487	225	**CH041**	71B4	**PH041**	56C
46.0	3.8	648	37.76	2478	1484	**CH042**	71B4	**PH042**	56C
40.0	3.3	751	43.75	2478	1484	**CH042**	71B4	**PH042**	56C
37.0	3.0	815	47.53	2478	1484	**CH042**	71B4	**PH042**	56C
32.0	2.7	931	54.25	2478	1484	**CH042**	71B4	**PH042**	56C
28.0	2.6	1039	61.83	2655	1484	**CH043**	71B4	**PH043**	56C
23.0	2.1	1288	76.67	2655	1484	**CH043**	71B4	**PH043**	56C
20.0	1.8	1462	87.05	2655	1484	**CH043**	71B4	**PH043**	56C
15.0	1.4	1924	114.55	2655	1484	**CH043**	71B4	**PH043**	56C
14.0	1.3	2111	125.69	2655	1484	**CH043**	71B4	**PH043**	56C
12.0	1.1	2386	142.04	2655	1484	**CH043**	71B4	**PH043**	56C
24.0	3.6	1222	72.75	4425	1798	**CH053**	71B4	**PH053**	56C
19.0	2.9	1520	90.51	4425	1798	**CH053**	71B4	**PH053**	56C
16.0	2.4	1830	108.95	4425	1798	**CH053**	71B4	**PH053**	56C
13.0	2.0	2264	134.76	4425	1798	**CH053**	71B4	**PH053**	56C
11.0	1.7	2642	157.29	4425	1798	**CH053**	71B4	**PH053**	56C
9.0	1.4	3268	194.56	4425	1798	**CH053**	71B4	**PH053**	56C
8.1	1.2	3635	216.38	4425	1798	**CH053**	71B4	**PH053**	56C
15.0	3.8	1982	118.00	7523	2698	**CH063**	71B4	**PH063**	56C
13.0	3.3	2275	135.40	7523	2698	**CH063**	71B4	**PH063**	56C
12.0	3.0	2512	149.51	7523	2698	**CH063**	71B4	**PH063**	56C
10.0	2.6	2867	170.67	7523	2698	**CH063**	71B4	**PH063**	56C
9.4	2.4	3128	186.18	7523	2698	**CH063**	71B4	**PH063**	56C
8.1	2.1	3615	215.21	7523	2698	**CH063**	71B4	**PH063**	56C
7.5	1.9	3942	234.67	7523	2698	**CH063**	71B4	**PH063**	56C
6.5	1.7	4502	268.00	7523	2698	**CH063**	71B4	**PH063**	56C
686.0	3.8	44	2.55	168	128	**HA31**	71B4	**-**	-
594.0	3.5	51	2.94	177	134	**HA31**	71B4	**-**	-
551.0	3.2	55	3.18	177	137	**HA31**	71B4	**-**	-
521.0	3.0	58	3.36	177	140	**HA31**	71B4	**-**	-
453.0	2.8	67	3.87	186	146	**HA31**	71B4	**-**	-
415.0	2.5	73	4.21	186	151	**HA31**	71B4	**-**	-
368.0	2.4	82	4.75	195	157	**HA31**	71B4	**-**	-
343.0	2.3	88	5.10	204	161	**HA31**	71B4	**-**	-
321.0	2.2	95	5.45	204	164	**HA31**	71B4	**-**	-
278.0	1.9	109	6.30	204	172	**HA31**	71B4	**-**	-
222.0	1.4	137	7.88	195	186	**HA31**	71B4	**-**	-
132.0	3.1	227	13.25	708	309	**CHA32**	71B4	**HA32**	56C
106.0	2.5	283	16.49	708	332	**CHA32**	71B4	**HA32**	56C
86.0	2.3	348	20.26	797	356	**CHA32**	71B4	**HA32**	56C
71.0	1.8	421	24.55	752	379	**CHA32**	71B4	**HA32**	56C

0.5 HP

Output speed [rpm]	Service factor sf	Output torque [in-lbs]	Exact ratio i	Max. torque [in-lbs]	OHL	Gearmotor		Gear Reducer	
					Output shaft [lbs]	Reducer	Motor	Reducer	NEMA C-input
57.0	1.4	524	30.55	708	408	**CHA32**	71B4	**HA32**	56C
49.0	1.3	608	35.44	797	429	**CHA32**	71B4	**HA32**	56C
40.0	1.1	757	44.10	797	450	**CHA32**	71B4	**HA32**	56C
34.0	1.0	862	51.32	885	450	**CHA33**	71B4	**HA33**	56C
368.0	3.2	82	4.75	266	159	**CHA41**	71B4	**HA41**	56C
321.0	2.8	95	5.45	266	166	**CHA41**	71B4	**HA41**	56C
222.0	1.6	137	7.88	221	188	**CHA41**	71B4	**HA41**	56C
86.0	3.8	348	20.26	1328	749	**CHA42**	71B4	**HA42**	56C
71.0	3.3	421	24.55	1372	799	**CHA42**	71B4	**HA42**	56C
57.0	2.4	524	30.55	1239	859	**CHA42**	71B4	**HA42**	56C
49.0	2.2	608	35.44	1328	903	**CHA42**	71B4	**HA42**	56C
40.0	1.6	757	44.10	1239	967	**CHA42**	71B4	**HA42**	56C
36.0	1.2	836	48.75	1018	967	**CHA42**	71B4	**HA42**	56C
29.0	1.1	1041	60.67	1151	967	**CHA42**	71B4	**HA42**	56C
34.0	1.5	862	51.32	1328	967	**CHA43**	71B4	**HA43**	56C
29.0	1.3	1002	59.65	1328	967	**CHA43**	71B4	**HA43**	56C
24.0	1.1	1214	72.27	1328	967	**CHA43**	71B4	**HA43**	56C
222.0	2.6	137	7.88	354	517	**CHA51**	71B4	**HA51**	56C
162.0	1.2	188	10.83	221	575	**CHA51**	71B4	**HA51**	56C
39.0	3.2	771	44.95	2478	1222	**-**	-	**HA52**	56C
35.0	3.1	854	49.78	2655	1264	**-**	-	**HA52**	56C
28.0	2.4	1061	61.87	2567	1349	**-**	-	**HA52**	56C
35.0	3.2	837	49.80	2655	1264	**CHA53**	71B4	**HA53**	56C
29.0	2.6	1012	60.25	2655	1347	**CHA53**	71B4	**HA53**	56C
23.0	2.1	1258	74.88	2655	1349	**CHA53**	71B4	**HA53**	56C
20.0	1.8	1479	88.02	2655	1349	**CHA53**	71B4	**HA53**	56C
16.0	1.4	1875	111.61	2655	1349	**CHA53**	71B4	**HA53**	56C
13.0	1.1	2330	138.71	2655	1349	**CHA53**	71B4	**HA53**	56C
164.0	3.4	185	10.67	620	857	**-**	-	**HA61**	56C
35.0	3.8	854	49.78	3275	1798	**-**	-	**HA62**	56C
28.0	3.7	1061	61.87	3894	1798	**-**	-	**HA62**	56C
23.0	3.4	1258	74.88	4248	1798	**CHA63**	71B4	**HA63**	56C
20.0	2.9	1479	88.02	4248	1798	**CHA63**	71B4	**HA63**	56C
16.0	2.3	1875	111.61	4248	1798	**CHA63**	71B4	**HA63**	56C
13.0	1.8	2330	138.71	4248	1798	**CHA63**	71B4	**HA63**	56C
11.0	1.6	2739	163.05	4248	1798	**CHA63**	71B4	**HA63**	56C
8.7	1.3	3364	200.27	4248	1798	**CHA63**	71B4	**HA63**	56C
7.4	1.1	3955	235.41	4248	1798	**CHA63**	71B4	**HA63**	56C

0.75 HP

Output speed [rpm]	Service factor sf	Output torque [in-lbs]	Exact ratio i	Max. torque [in-lbs]	OHL	Gearmotor		Gear Reducer	
					Output shaft [lbs]	Reducer	Motor	Reducer	NEMA C-input
104.0	3.9	428	16.77	1682	1158	**CH032**	71C4/80A4	**PH032**	56C
96.0	3.8	464	18.20	1770	1183	**CH032**	71C4/80A4	**PH032**	56C
88.0	3.5	507	19.90	1770	1211	**CH032**	71C4/80A4	**PH032**	56C
77.0	3.1	578	22.68	1770	1236	**CH032**	71C4/80A4	**PH032**	56C
73.0	2.9	608	23.83	1770	1236	**CH032**	71C4/80A4	**PH032**	56C
66.0	2.6	673	26.39	1770	1236	**CH032**	71C4/80A4	**PH032**	56C
59.0	2.3	757	29.70	1770	1236	**CH032**	71C4/80A4	**PH032**	56C
53.0	2.1	839	32.89	1770	1236	**CH032**	71C4/80A4	**PH032**	56C
46.0	1.8	967	37.92	1770	1236	**CH032**	71C4/80A4	**PH032**	56C
42.0	1.7	1056	41.40	1770	1236	**CH032**	71C4/80A4	**PH032**	56C
37.0	1.5	1205	47.25	1770	1236	**CH032**	71C4/80A4	**PH032**	56C
33.0	1.3	1338	53.59	1770	1236	**CH033**	71C4/80A4	**PH033**	56C
26.0	1.1	1668	66.78	1770	1236	**CH033**	71C4/80A4	**PH033**	56C
645.0	3.8	70	2.71	266	174	**CH041**	71C4/80A4	**PH041**	56C
417.0	3.7	108	4.20	398	199	**CH041**	71C4/80A4	**PH041**	56C
350.0	3.1	129	5.00	398	209	**CH041**	71C4/80A4	**PH041**	56C
318.0	3.1	142	5.50	443	215	**CH041**	71C4/80A4	**PH041**	56C
287.0	2.8	157	6.09	443	221	**CH041**	71C4/80A4	**PH041**	56C
228.0	2.2	198	7.67	443	225	**CH041**	71C4/80A4	**PH041**	56C
200.0	2.2	225	8.75	487	225	**CH041**	71C4/80A4	**PH041**	56C
76.0	3.9	590	23.15	2301	1484	**CH042**	71C4/80A4	**PH042**	56C
67.0	3.5	664	26.04	2301	1484	**CH042**	71C4/80A4	**PH042**	56C
64.0	3.5	701	27.50	2478	1484	**CH042**	71C4/80A4	**PH042**	56C
57.0	3.2	777	30.45	2478	1484	**CH042**	71C4/80A4	**PH042**	56C
51.0	2.8	870	34.10	2478	1484	**CH042**	71C4/80A4	**PH042**	56C
46.0	2.6	963	37.76	2478	1484	**CH042**	71C4/80A4	**PH042**	56C
40.0	2.2	1116	43.75	2478	1484	**CH042**	71C4/80A4	**PH042**	56C
37.0	2.0	1212	47.53	2478	1484	**CH042**	71C4/80A4	**PH042**	56C
32.0	1.8	1383	54.25	2478	1484	**CH042**	71C4/80A4	**PH042**	56C
28.0	1.7	1544	61.83	2655	1484	**CH043**	71C4/80A4	**PH043**	56C
23.0	1.4	1915	76.67	2655	1484	**CH043**	71C4/80A4	**PH043**	56C
20.0	1.2	2174	87.05	2655	1484	**CH043**	71C4/80A4	**PH043**	56C
39.0	3.7	1157	45.36	4337	1798	**CH052**	71C4/80A4	**PH052**	56C
36.0	3.5	1253	49.13	4337	1798	**CH052**	71C4/80A4	**PH052**	56C
31.0	3.0	1431	56.11	4337	1798	**CH052**	71C4/80A4	**PH052**	56C
30.0	3.0	1469	58.81	4425	1798	**CH053**	71C4/80A4	**PH053**	56C
24.0	2.4	1817	72.75	4425	1798	**CH053**	71C4/80A4	**PH053**	56C
19.0	2.0	2260	90.51	4425	1798	**CH053**	71C4/80A4	**PH053**	56C
16.0	1.6	2721	108.95	4425	1798	**CH053**	71C4/80A4	**PH053**	56C
13.0	1.3	3365	134.76	4425	1798	**CH053**	71C4/80A4	**PH053**	56C
11.0	1.1	3928	157.29	4425	1798	**CH053**	71C4	**PH053**	56C

0.75 HP

Output speed [rpm]	Service factor sf	Output torque [in-lbs]	Exact ratio i	Max. torque [in-lbs]	OHL	Gearmotor		Gear Reducer	
					Output shaft [lbs]	Reducer	Motor	Reducer	NEMA C-input
20.0	3.5	2143	85.82	7523	2698	**CH063**	71C4/80A4	**PH063**	56C
18.0	3.2	2366	94.76	7523	2698	**CH063**	71C4/80A4	**PH063**	56C
15.0	2.6	2947	118.00	7523	2698	**CH063**	71C4/80A4	**PH063**	56C
13.0	2.2	3381	135.40	7523	2698	**CH063**	71C4/80A4	**PH063**	56C
12.0	2.0	3733	149.51	7523	2698	**CH063**	71C4/80A4	**PH063**	56C
10.0	1.8	4262	170.67	7523	2698	**CH063**	71C4/80A4	**PH063**	56C
9.4	1.6	4649	186.18	7523	2698	**CH063**	71C4/80A4	**PH063**	56C
8.1	1.4	5374	215.21	7523	2698	**CH063**	71C4/80A4	**PH063**	56C
7.5	1.3	5860	234.67	7523	2698	**CH063**	71C4/80A4	**PH063**	56C
6.5	1.1	6692	268.00	7523	2698	**CH063**	71C4/80A4	**PH063**	56C
11.0	3.9	4054	162.35	15931	4047	**CH083**	80A4	**PH083**	56C
9.8	3.6	4473	179.13	15931	4047	**CH083**	80A4	**PH083**	56C
9.0	3.3	4871	195.07	15931	4047	**CH083**	80A4	**PH083**	56C
7.9	2.9	5563	222.78	15931	4047	**CH083**	80A4	**PH083**	56C
686.0	2.6	66	2.55	168	128	**HA31**	71C4/80A4	**-**	-
594.0	2.3	76	2.94	177	134	**HA31**	71C4/80A4	**-**	-
551.0	2.2	82	3.18	177	137	**HA31**	71C4/80A4	**-**	-
521.0	2.0	87	3.36	177	140	**HA31**	71C4/80A4	**-**	-
453.0	1.9	100	3.87	186	146	**HA31**	71C4/80A4	**-**	-
415.0	1.7	109	4.21	186	151	**HA31**	71C4/80A4	**-**	-
368.0	1.6	122	4.75	195	157	**HA31**	71C4/80A4	**-**	-
343.0	1.5	131	5.10	204	161	**HA31**	71C4	**-**	-
321.0	1.4	141	5.45	204	164	**HA31**	71C4	**-**	-
278.0	1.3	162	6.30	204	172	**HA31**	71C4	**-**	-
216.0	3.2	207	8.11	664	262	**CHA32**	71C4/80A4	**HA32**	56C
160.0	2.9	279	10.94	797	290	**CHA32**	71C4/80A4	**HA32**	56C
132.0	2.1	338	13.25	708	309	**CHA32**	71C4/80A4	**HA32**	56C
106.0	1.7	421	16.49	708	332	**CHA32**	71C4/80A4	**HA32**	56C
86.0	1.5	517	20.26	797	356	**CHA32**	71C4/80A4	**HA32**	56C
71.0	1.2	626	24.55	752	379	**CHA32**	71C4/80A4	**HA32**	56C
594.0	2.9	76	2.94	221	135	**CHA41**	71C4/80A4	**HA41**	56C
368.0	2.2	122	4.75	266	159	**CHA41**	71C4/80A4	**HA41**	56C
321.0	1.9	141	5.45	266	166	**CHA41**	71C4/80A4	**HA41**	56C
222.0	1.1	203	7.88	221	188	**CHA41**	71C4	**HA41**	56C
132.0	3.7	338	13.25	1239	651	**CHA42**	71C4/80A4	**HA42**	56C
106.0	2.9	421	16.49	1239	700	**CHA42**	71C4/80A4	**HA42**	56C
86.0	2.6	517	20.26	1328	749	**CHA42**	71C4/80A4	**HA42**	56C
71.0	2.2	626	24.55	1372	799	**CHA42**	71C4/80A4	**HA42**	56C
57.0	1.6	779	30.55	1239	859	**CHA42**	71C4/80A4	**HA42**	56C
49.0	1.5	904	35.44	1328	903	**CHA42**	71C4	**HA42**	56C
40.0	1.1	1125	44.10	1239	967	**CHA42**	71C4	**HA42**	56C

5.1 H/HA GEARED MOTORS

0.75 HP

Output speed [rpm]	Service factor sf	Output torque [in-lbs]	Exact ratio i	Max. torque [in-lbs]	OHL	Gearmotor		Gear Reducer	
					Output shaft [lbs]	Reducer	Motor	Reducer	NEMA C-input
34.0	1.0	1282	51.32	1328	967	**CHA43**	71C4	**HA43**	56C
368.0	3.6	122	4.75	443	437	**CHA51**	71C4/80A4	**HA51**	56C
321.0	3.1	141	5.45	443	458	**CHA51**	71C4/80A4	**HA51**	56C
222.0	1.7	203	7.88	354	517	**CHA51**	71C4	**HA51**	56C
69.0	3.8	649	25.43	2478	1011	**CHA52**	80A4	**HA52**	56C
59.0	3.5	762	29.89	2655	1066	**CHA52**	80A4	**HA52**	56C
48.0	2.9	922	36.17	2655	1136	**CHA52**	80A4	**HA52**	56C
39.0	2.2	1146	44.95	2478	1222	**CHA52**	80A4	**HA52**	56C
35.0	2.1	1269	49.78	2655	1264	**CHA52**	80A4	**HA52**	56C
28.0	1.6	1578	61.87	2567	1349	**CHA52**	80A4	**HA52**	56C
35.0	2.1	1243	49.80	2655	1264	**CHA53**	71C4/80A4	**HA53**	56C
29.0	1.8	1504	60.25	2655	1347	**CHA53**	71C4/80A4	**HA53**	56C
23.0	1.4	1870	74.88	2655	1349	**CHA53**	71C4/80A4	**HA53**	56C
20.0	1.2	2198	88.02	2655	1349	**CHA53**	71C4/80A4	**HA53**	56C
226.0	4.0	200	7.75	797	770	**CHA61**	80A4	**HA61**	56C
164.0	2.3	275	10.67	620	857	**CHA61**	80A4	**HA61**	56C
39.0	3.4	1146	44.95	3894	1798	**CHA62**	80A4	**HA62**	56C
35.0	2.6	1269	49.78	3275	1798	**CHA62**	80A4	**HA62**	56C
28.0	2.5	1578	61.87	3894	1798	**CHA62**	80A4	**HA62**	56C
35.0	3.4	1243	49.80	4248	1798	**CHA63**	71C4/80A4	**HA63**	56C
29.0	2.8	1504	60.25	4248	1798	**CHA63**	71C4/80A4	**HA63**	56C
23.0	2.3	1870	74.88	4248	1798	**CHA63**	71C4/80A4	**HA63**	56C
20.0	1.9	2198	88.02	4248	1798	**CHA63**	71C4/80A4	**HA63**	56C
16.0	1.5	2787	111.61	4248	1798	**CHA63**	71C4/80A4	**HA63**	56C
13.0	1.2	3464	138.71	4248	1798	**CHA63**	71C4/80A4	**HA63**	56C
11.0	1.0	4072	163.05	4248	1798	**CHA63**	71C4/80A4	**HA63**	56C

1 HP

Output speed [rpm]	Service factor sf	Output torque [in-lbs]	Exact ratio i	Max. torque [in-lbs]	OHL	Gearmotor		Gear Reducer	
					Output shaft [lbs]	Reducer	Motor	Reducer	NEMA C-input
197.0	3.7	308	8.87	1151	946	**CH032**	80B4	**PH032**	56C/143/145TC
173.0	3.5	353	10.14	1239	982	**CH032**	80B4	**PH032**	56C/143/145TC
149.0	3.1	409	11.76	1283	1021	**CH032**	80B4	**PH032**	56C/143/145TC
128.0	3.2	477	13.72	1505	1062	**CH032**	80B4	**PH032**	56C/143/145TC
119.0	3.0	510	14.66	1505	1080	**CH032**	80B4	**PH032**	56C/143/145TC
104.0	2.9	583	16.77	1682	1117	**CH032**	80B4	**PH032**	56C/143/145TC
96.0	2.8	633	18.20	1770	1139	**CH032**	80B4	**PH032**	56C/143/145TC
88.0	2.6	692	19.90	1770	1163	**CH032**	80B4	**PH032**	56C/143/145TC
77.0	2.2	789	22.68	1770	1197	**CH032**	80B4	**PH032**	56C/143/145TC
73.0	2.1	829	23.83	1770	1210	**CH032**	80B4	**PH032**	56C/143/145TC
66.0	1.9	918	26.39	1770	1236	**CH032**	80B4	**PH032**	56C/143/145TC

1 HP

Output speed [rpm]	Service factor sf	Output torque [in-lbs]	Exact ratio i	Max. torque [in-lbs]	OHL	Gearmotor		Gear Reducer	
					Output shaft [lbs]	Reducer	Motor	Reducer	NEMA C-input
59.0	1.7	1033	29.70	1770	1236	**CH032**	80B4	**PH032**	56C/143/145TC
53.0	1.5	1144	32.89	1770	1236	**CH032**	80B4	**PH032**	56C/143/145TC
46.0	1.3	1319	37.92	1770	1236	**CH032**	80B4	**PH032**	56C/143/145TC
42.0	1.2	1440	41.40	1770	1236	**CH032**	80B4	**PH032**	56C/143/145TC
37.0	1.1	1643	47.25	1770	1236	**CH032**	80B4	**PH032**	56C/143/145TC
875.0	3.1	70	2.00	221	157	**CH041**	80B4	**PH041**	56C/143/145TC
688.0	3.0	89	2.55	266	168	**CH041**	80B4	**PH041**	56C/143/145TC
645.0	2.8	95	2.71	266	171	**CH041**	80B4	**PH041**	56C/143/145TC
564.0	3.2	109	3.11	354	178	**CH041**	80B4	**PH041**	56C/143/145TC
488.0	3.2	126	3.59	398	186	**CH041**	80B4	**PH041**	56C/143/145TC
417.0	2.7	148	4.20	398	194	**CH041**	80B4	**PH041**	56C/143/145TC
350.0	2.3	176	5.00	398	203	**CH041**	80B4	**PH041**	56C/143/145TC
318.0	2.3	193	5.50	443	208	**CH041**	80B4	**PH041**	56C/143/145TC
287.0	2.1	214	6.09	443	214	**CH041**	80B4	**PH041**	56C/143/145TC
228.0	1.6	269	7.67	443	225	**CH041**	80B4	**PH041**	56C/143/145TC
200.0	1.6	307	8.75	487	225	**CH041**	80B4	**PH041**	56C/143/145TC
110.0	4.0	555	15.96	2213	1437	**CH042**	80B4	**PH042**	56C/143/145TC
92.0	3.3	661	19.00	2213	1484	**CH042**	80B4	**PH042**	56C/143/145TC
83.0	3.0	730	21.00	2213	1484	**CH042**	80B4	**PH042**	56C/143/145TC
76.0	2.9	805	23.15	2301	1484	**CH042**	80B4	**PH042**	56C/143/145TC
67.0	2.5	906	26.04	2301	1484	**CH042**	80B4	**PH042**	56C/143/145TC
64.0	2.6	956	27.50	2478	1484	**CH042**	80B4	**PH042**	56C/143/145TC
57.0	2.3	1059	30.45	2478	1484	**CH042**	80B4	**PH042**	56C/143/145TC
51.0	2.1	1186	34.10	2478	1484	**CH042**	80B4	**PH042**	56C/143/145TC
46.0	1.9	1313	37.76	2478	1484	**CH042**	80B4	**PH042**	56C/143/145TC
40.0	1.6	1521	43.75	2478	1484	**CH042**	80B4	**PH042**	56C/143/145TC
37.0	1.5	1653	47.53	2478	1484	**CH042**	80B4	**PH042**	56C/143/145TC
32.0	1.3	1887	54.25	2478	1484	**CH042**	80B4	**PH042**	56C/143/145TC
28.0	1.3	2106	61.83	2655	1484	**CH043**	80B4	**PH043**	56C/143/145TC
23.0	1.0	2611	76.67	2655	1484	**CH043**	80B4	**PH043**	56C/143/145TC
239.0	3.4	258	7.33	885	562	**CH051**	80B4	**PH051**	56C/143/145TC
209.0	3.0	294	8.38	885	562	**CH051**	80B4	**PH051**	56C/143/145TC
56.0	4.0	1096	31.52	4337	1798	**CH052**	80B4	**PH052**	56C/143/145TC
53.0	3.8	1148	33.00	4337	1798	**CH052**	80B4	**PH052**	56C/143/145TC
45.0	3.2	1356	38.98	4337	1798	**CH052**	80B4	**PH052**	56C/143/145TC
39.0	2.7	1578	45.36	4337	1798	**CH052**	80B4	**PH052**	56C/143/145TC
36.0	2.5	1709	49.13	4337	1798	**CH052**	80B4	**PH052**	56C/143/145TC
31.0	2.2	1951	56.11	4337	1798	**CH052**	80B4	**PH052**	56C/143/145TC
30.0	2.2	2003	58.81	4425	1798	**CH053**	80B4	**PH053**	56C/143/145TC
24.0	1.8	2477	72.75	4425	1798	**CH053**	80B4	**PH053**	56C/143/145TC
19.0	1.4	3082	90.51	4425	1798	**CH053**	80B4	**PH053**	56C/143/145TC

1 HP

Output speed [rpm]	Service factor sf	Output torque [in-lbs]	Exact ratio i	Max. torque [in-lbs]	OHL	Gearmotor		Gear Reducer	
					Output shaft [lbs]	Reducer	Motor	Reducer	NEMA C-input
16.0	1.2	3710	108.95	4425	1798	**CH053**	80B4	**PH053**	56C/143/145TC
26.0	3.2	2315	68.00	7523	2698	**-**	-	**PH063**	56C/143/145TC
20.0	2.6	2922	85.82	7523	2698	**CH063**	80B4	**PH063**	56C/143/145TC
18.0	2.3	3227	94.76	7523	2698	**CH063**	80B4	**PH063**	56C/143/145TC
15.0	1.9	4018	118.00	7523	2698	**CH063**	80B4	**PH063**	56C/143/145TC
13.0	1.6	4611	135.40	7523	2698	**CH063**	80B4	**PH063**	56C/143/145TC
12.0	1.5	5091	149.51	7523	2698	**CH063**	80B4	**PH063**	56C/143/145TC
10.0	1.3	5811	170.67	7523	2698	**CH063**	80B4	**PH063**	56C/143/145TC
9.4	1.2	6340	186.18	7523	2698	**CH063**	80B4	**PH063**	56C/143/145TC
8.1	1.0	7328	215.21	7523	2698	**CH063**	80B4	**PH063**	56C/143/145TC
14.0	3.8	4238	124.44	15931	4047	**CH083**	80B4	**PH083**	56C/143/145TC
12.0	3.3	4841	142.15	15931	4047	**CH083**	80B4	**PH083**	56C/143/145TC
11.0	3.0	5270	154.76	15931	4047	**CH083**	80B4	**PH083**	56C/143/145TC
11.0	2.9	5528	162.35	15931	4047	**CH083**	80B4	**PH083**	56C/143/145TC
9.8	2.6	6100	179.13	15931	4047	**CH083**	80B4	**PH083**	56C/143/145TC
9.0	2.4	6642	195.07	15931	4047	**CH083**	80B4	**PH083**	56C/143/145TC
7.9	2.1	7586	222.78	15931	4047	**CH083**	80B4	**PH083**	56C/143/145TC
7.2	3.9	8260	242.59	31863	4946	**-**	-	**PH103**	143/145TC
686.0	1.9	90	2.55	168	128	**HA31**	80B4	**-**	-
594.0	1.7	103	2.94	177	134	**HA31**	80B4	**-**	-
551.0	1.6	112	3.18	177	137	**HA31**	80B4	**-**	-
521.0	1.5	118	3.36	177	140	**HA31**	80B4	**-**	-
453.0	1.4	136	3.87	186	146	**HA31**	80B4	**-**	-
415.0	1.3	148	4.21	186	151	**HA31**	80B4	**-**	-
368.0	1.2	167	4.75	195	157	**HA31**	80B4	**-**	-
325.0	3.8	187	5.38	708	229	**CHA32**	80B4	**HA32**	56C/143/145TC
269.0	3.1	227	6.52	708	244	**CHA32**	80B4	**HA32**	56C/143/145TC
216.0	2.4	282	8.11	664	262	**CHA32**	80B4	**HA32**	56C/143/145TC
160.0	2.1	380	10.94	797	290	**CHA32**	80B4	**HA32**	56C/143/145TC
132.0	1.5	461	13.25	708	309	**CHA32**	80B4	**HA32**	56C/143/145TC
106.0	1.2	573	16.49	708	332	**CHA32**	80B4	**HA32**	56C/143/145TC
86.0	1.1	705	20.26	797	356	**CHA32**	80B4	**HA32**	56C/143/145TC
594.0	2.1	103	2.94	221	135	**CHA41**	80B4	**HA41**	56C/143/145TC
368.0	1.6	167	4.75	266	159	**CHA41**	80B4	**HA41**	56C/143/145TC
321.0	1.4	192	5.45	266	166	**CHA41**	80B4	**HA41**	56C/143/145TC
160.0	3.5	380	10.94	1328	610	**CHA42**	80B4	**HA42**	56C/143/145TC
132.0	2.7	461	13.25	1239	651	**CHA42**	80B4	**HA42**	56C/143/145TC
106.0	2.2	573	16.49	1239	700	**CHA42**	80B4	**HA42**	56C/143/145TC
86.0	1.9	705	20.26	1328	749	**CHA42**	80B4	**HA42**	56C/143/145TC
71.0	1.6	854	24.55	1372	799	**CHA42**	80B4	**HA42**	56C/143/145TC
57.0	1.2	1062	30.55	1239	859	**CHA42**	80B4	**HA42**	56C/143/145TC

5.1 H/HA GEARED MOTORS

1 HP

Output speed [rpm]	Service factor sf	Output torque [in-lbs]	Exact ratio i	Max. torque [in-lbs]	OHL	Gearmotor		Gear Reducer	
					Output shaft [lbs]	Reducer	Motor	Reducer	NEMA C-input
49.0	1.1	1232	35.44	1328	903	**-**	-	**HA42**	56C
594.0	3.4	103	2.94	354	373	**CHA51**	80B4	**HA51**	56C/143/145TC
368.0	2.7	167	4.75	443	437	**CHA51**	80B4	**HA51**	56C/143/145TC
321.0	2.3	192	5.45	443	458	**CHA51**	80B4	**HA51**	56C/143/145TC
222.0	1.3	277	7.88	354	517	**-**	-	**HA51**	56C
86.0	3.6	712	20.46	2567	940	**CHA52**	80B4	**HA52**	56C/143/145TC
69.0	2.8	884	25.43	2478	1011	**CHA52**	80B4	**HA52**	56C/143/145TC
59.0	2.6	1040	29.89	2655	1066	**CHA52**	80B4	**HA52**	56C/143/145TC
48.0	2.1	1258	36.17	2655	1136	**CHA52**	80B4	**HA52**	56C/143/145TC
39.0	1.6	1563	44.95	2478	1222	**CHA52**	80B4	**HA52**	56C/143/145TC
35.0	1.5	1731	49.78	2655	1264	**CHA52**	80B4	**HA52**	56C/143/145TC
28.0	1.2	2151	61.87	2567	1349	**CHA52**	80B4	**HA52**	56C/143/145TC
35.0	1.6	1696	49.80	2655	1264	**CHA53**	80B4	**HA53**	56C/143/145TC
29.0	1.3	2052	60.25	2655	1347	**CHA53**	80B4	**HA53**	56C/143/145TC
23.0	1.0	2550	74.88	2655	1349	**CHA53**	80B4	**HA53**	56C/143/145TC
226.0	2.9	272	7.75	797	770	**CHA61**	80B4	**HA61**	56C/143/145TC
164.0	1.7	375	10.67	620	857	**CHA61**	80B4	**HA61**	56C/143/145TC
59.0	3.8	1040	29.89	3983	1574	**CHA62**	80B4	**HA62**	56C/143/145TC
48.0	3.3	1258	36.17	4160	1677	**CHA62**	80B4	**HA62**	56C/143/145TC
39.0	2.5	1563	44.95	3894	1798	**CHA62**	80B4	**HA62**	56C/143/145TC
35.0	1.9	1731	49.78	3275	1798	**CHA62**	80B4	**HA62**	56C/143/145TC
28.0	1.8	2151	61.87	3894	1798	**CHA62**	80B4	**HA62**	56C/143/145TC
35.0	2.5	1696	49.80	4248	1798	**CHA63**	80B4	**HA63**	56C/143/145TC
29.0	2.1	2052	60.25	4248	1798	**CHA63**	80B4	**HA63**	56C/143/145TC
23.0	1.7	2550	74.88	4248	1798	**CHA63**	80B4	**HA63**	56C/143/145TC
20.0	1.4	2997	88.02	4248	1798	**CHA63**	80B4	**HA63**	56C/143/145TC
16.0	1.1	3800	111.61	4248	1798	**CHA63**	80B4	**HA63**	56C/143/145TC

1.5 HP

Output speed [rpm]	Service factor sf	Output torque [in-lbs]	Exact ratio i	Max. torque [in-lbs]	OHL	Gearmotor		Gear Reducer	
					Output shaft [lbs]	Reducer	Motor	Reducer	NEMA C-input
373.0	3.5	240	4.70	841	768	**CH032**	80D4/90S4	**PH032**	56C/143/145TC
281.0	2.9	318	6.23	929	830	**CH032**	80D4/90S4	**PH032**	56C/143/145TC
225.0	2.8	396	7.76	1106	878	**CH032**	80D4/90S4	**PH032**	56C/143/145TC
197.0	2.5	452	8.87	1151	908	**CH032**	80D4/90S4	**PH032**	56C/143/145TC
173.0	2.4	517	10.14	1239	938	**CH032**	80D4/90S4	**PH032**	56C/143/145TC
149.0	2.1	600	11.76	1283	971	**CH032**	80D4/90S4	**PH032**	56C/143/145TC
128.0	2.2	700	13.72	1505	1004	**CH032**	80D4/90S4	**PH032**	56C/143/145TC
119.0	2.0	748	14.66	1505	1017	**CH032**	80D4/90S4	**PH032**	56C/143/145TC
104.0	2.0	855	16.77	1682	1045	**CH032**	80D4/90S4	**PH032**	56C/143/145TC
96.0	1.9	928	18.20	1770	1061	**CH032**	80D4/90S4	**PH032**	56C/143/145TC

1.5 HP

Output speed [rpm]	Service factor sf	Output torque [in-lbs]	Exact ratio i	Max. torque [in-lbs]	OHL	Gearmotor		Gear Reducer	
					Output shaft [lbs]	Reducer	Motor	Reducer	NEMA C-input
88.0	1.7	1015	19.90	1770	1077	**CH032**	80D4/90S4	**PH032**	56C/143/145TC
77.0	1.5	1157	22.68	1770	1100	**CH032**	80D4/90S4	**PH032**	56C/143/145TC
73.0	1.5	1216	23.83	1770	1108	**CH032**	80D4/90S4	**PH032**	56C/143/145TC
66.0	1.3	1346	26.39	1770	1123	**CH032**	80D4/90S4	**PH032**	56C/143/145TC
59.0	1.2	1515	29.70	1770	1137	**CH032**	80D4/90S4	**PH032**	56C/143/145TC
53.0	1.1	1678	32.89	1770	1148	**CH032**	80D4/90S4	**PH032**	56C/143/145TC
1217.0	3.0	74	1.44	221	139	**CH041**	80D4/90S4	**PH041**	56C/143/145TC
875.0	2.1	103	2.00	221	153	**CH041**	80D4/90S4	**PH041**	56C/143/145TC
688.0	2.0	131	2.55	266	163	**CH041**	80D4/90S4	**PH041**	56C/143/145TC
645.0	1.9	140	2.71	266	166	**CH041**	80D4/90S4	**PH041**	56C/143/145TC
564.0	2.2	160	3.11	354	172	**CH041**	80D4/90S4	**PH041**	56C/143/145TC
488.0	2.2	185	3.59	398	179	**CH041**	80D4/90S4	**PH041**	56C/143/145TC
417.0	1.8	216	4.20	398	186	**CH041**	80D4/90S4	**PH041**	56C/143/145TC
350.0	1.5	258	5.00	398	194	**CH041**	80D4/90S4	**PH041**	56C/143/145TC
318.0	1.6	283	5.50	443	198	**CH041**	80D4/90S4	**PH041**	56C/143/145TC
287.0	1.4	314	6.09	443	202	**CH041**	80D4/90S4	**PH041**	56C/143/145TC
228.0	1.1	395	7.67	443	212	**CH041**	80D4/90S4	**PH041**	56C/143/145TC
200.0	1.1	451	8.75	487	217	**CH041**	80D4/90S4	**PH041**	56C/143/145TC
243.0	3.9	367	7.19	1416	1114	**CH042**	80D4/90S4	**PH042**	56C/143/145TC
148.0	3.7	602	11.80	2213	1279	**CH042**	80D4/90S4	**PH042**	56C/143/145TC
129.0	3.2	692	13.57	2213	1327	**CH042**	80D4/90S4	**PH042**	56C/143/145TC
110.0	2.7	814	15.96	2213	1383	**CH042**	80D4/90S4	**PH042**	56C/143/145TC
92.0	2.3	969	19.00	2213	1443	**CH042**	80D4/90S4	**PH042**	56C/143/145TC
83.0	2.1	1071	21.00	2213	1478	**CH042**	80D4/90S4	**PH042**	56C/143/145TC
76.0	1.9	1181	23.15	2301	1484	**CH042**	80D4/90S4	**PH042**	56C/143/145TC
67.0	1.7	1328	26.04	2301	1484	**CH042**	80D4/90S4	**PH042**	56C/143/145TC
64.0	1.8	1403	27.50	2478	1484	**CH042**	80D4/90S4	**PH042**	56C/143/145TC
57.0	1.6	1553	30.45	2478	1484	**CH042**	80D4/90S4	**PH042**	56C/143/145TC
51.0	1.4	1739	34.10	2478	1484	**CH042**	80D4/90S4	**PH042**	56C/143/145TC
46.0	1.3	1926	37.76	2478	1484	**CH042**	80D4/90S4	**PH042**	56C/143/145TC
40.0	1.1	2231	43.75	2478	1484	**CH042**	80D4/90S4	**PH042**	56C/143/145TC
37.0	1.0	2424	47.53	2478	1484	**CH042**	80D4/90S4	**PH042**	56C/143/145TC
438.0	3.9	206	4.00	797	484	**CH051**	80D4/90S4	**PH051**	56C/143/145TC
367.0	3.4	246	4.77	841	510	**CH051**	80D4/90S4	**PH051**	56C/143/145TC
333.0	3.3	271	5.25	885	525	**CH051**	80D4/90S4	**PH051**	56C/143/145TC
301.0	3.0	300	5.82	885	541	**CH051**	80D4/90S4	**PH051**	56C/143/145TC
239.0	2.3	378	7.33	885	562	**CH051**	80D4/90S4	**PH051**	56C/143/145TC
209.0	2.1	432	8.38	885	562	**CH051**	80D4/90S4	**PH051**	56C/143/145TC
88.0	4.0	1019	19.97	4071	1798	**CH052**	80D4/90S4	**PH052**	56C/143/145TC
81.0	3.8	1105	21.67	4160	1798	**CH052**	80D4/90S4	**PH052**	56C/143/145TC
71.0	3.3	1260	24.71	4160	1798	**CH052**	80D4/90S4	**PH052**	56C/143/145TC

1.5 HP

Output speed [rpm]	Service factor sf	Output torque [in-lbs]	Exact ratio i	Max. torque [in-lbs]	OHL	Gearmotor		Gear Reducer	
					Output shaft [lbs]	Reducer	Motor	Reducer	NEMA C-input
67.0	3.2	1335	26.18	4337	1798	**CH052**	80D4/90S4	**PH052**	56C/143/145TC
62.0	3.0	1450	28.44	4337	1798	**CH052**	80D4/90S4	**PH052**	56C/143/145TC
56.0	2.7	1607	31.52	4337	1798	**CH052**	80D4/90S4	**PH052**	56C/143/145TC
53.0	2.6	1683	33.00	4337	1798	**CH052**	80D4/90S4	**PH052**	56C/143/145TC
45.0	2.2	1988	38.98	4337	1798	**CH052**	80D4/90S4	**PH052**	56C/143/145TC
39.0	1.9	2314	45.36	4337	1798	**CH052**	80D4/90S4	**PH052**	56C/143/145TC
36.0	1.7	2506	49.13	4337	1798	**CH052**	80D4/90S4	**PH052**	56C/143/145TC
31.0	1.5	2862	56.11	4337	1798	**CH052**	80D4/90S4	**PH052**	56C/143/145TC
30.0	1.5	2937	58.81	4425	1798	**CH053**	80D4/90S4	**PH053**	56C/143/145TC
24.0	1.2	3633	72.75	4425	1798	**CH053**	80D4/90S4	**PH053**	56C/143/145TC
239.0	4.0	378	7.33	1505	832	**CH061**	80D4/90S4	**PH061**	56C/143/145TC
209.0	3.5	432	8.38	1505	832	**CH061**	80D4/90S4	**PH061**	56C/143/145TC
47.0	3.8	1887	36.99	7081	2698	**CH062**	80D4/90S4	**PH062**	56C/143/145TC
43.0	3.7	2057	40.33	7523	2698	**CH062**	80D4/90S4	**PH062**	56C/143/145TC
38.0	3.2	2349	46.06	7523	2698	**CH062**	80D4/90S4	**PH062**	56C/143/145TC
35.0	3.0	2470	49.45	7523	2698	**CH063**	90S4	**PH063**	56C/143/145TC
32.0	2.8	2727	54.61	7523	2698	**CH063**	90S4	**PH063**	56C/143/145TC
26.0	2.2	3396	68.00	7523	2698	**CH063**	90S4	**PH063**	56C/143/145TC
20.0	1.8	4286	85.82	7523	2698	**CH063**	80D4/90S4	**PH063**	56C/143/145TC
18.0	1.6	4732	94.76	7523	2698	**CH063**	80D4/90S4	**PH063**	56C/143/145TC
15.0	1.3	5893	118.00	7523	2698	**CH063**	80D4/90S4	**PH063**	56C/143/145TC
13.0	1.1	6762	135.40	7523	2698	**CH063**	80D4/90S4	**PH063**	56C/143/145TC
12.0	1.0	7467	149.51	7523	2698	**CH063**	80D4/90S4	**PH063**	56C/143/145TC
20.0	3.7	4273	85.56	15931	4047	**CH083**	80D4/90S4	**PH083**	56C/143/145TC
18.0	3.3	4899	98.09	15931	4047	**CH083**	80D4/90S4	**PH083**	56C/143/145TC
16.0	2.8	5633	112.78	15931	4047	**CH083**	80D4/90S4	**PH083**	56C/143/145TC
14.0	2.6	6215	124.44	15931	4047	**CH083**	80D4/90S4	**PH083**	56C/143/145TC
12.0	2.2	7099	142.15	15931	4047	**CH083**	80D4/90S4	**PH083**	56C/143/145TC
11.0	2.1	7729	154.76	15931	4047	**CH083**	80D4/90S4	**PH083**	56C/143/145TC
11.0	2.0	8108	162.35	15931	4047	**CH083**	80D4/90S4	**PH083**	56C/143/145TC
9.8	1.8	8946	179.13	15931	4047	**CH083**	80D4/90S4	**PH083**	56C/143/145TC
9.0	1.6	9742	195.07	15931	4047	**CH083**	80D4/90S4	**PH083**	56C/143/145TC
7.9	1.4	11126	222.78	15931	4047	**CH083**	80D4/90S4	**PH083**	56C/143/145TC
11.0	3.9	8032	160.82	30978	4946	**CH103**	90S4	**PH103**	143/145TC
9.7	3.4	9043	181.07	30978	4946	**CH103**	90S4	**PH103**	143/145TC
9.0	3.2	9699	194.21	30978	4946	**CH103**	90S4	**PH103**	143/145TC
8.1	2.9	10760	215.45	30978	4946	**CH103**	90S4	**PH103**	143/145TC
7.2	2.6	12115	242.59	31863	4946	**CH103**	90S4	**PH103**	143/145TC
686.0	1.3	131	2.55	168	128	**HA31**	80D4	**-**	-
594.0	1.2	152	2.94	177	134	**HA31**	80D4	**-**	-
551.0	1.1	164	3.18	177	137	**HA31**	80D4	**-**	-

1.5 HP

Output speed [rpm]	Service factor sf	Output torque [in-lbs]	Exact ratio i	Max. torque [in-lbs]	OHL	Gearmotor		Gear Reducer	
					Output shaft [lbs]	Reducer	Motor	Reducer	NEMA C-input
521.0	1.0	173	3.36	177	140	**HA31**	80D4	**-**	-
325.0	2.6	274	5.38	708	229	**CHA32**	80D4	**HA32**	56C/143/145TC
269.0	2.1	332	6.52	708	244	**CHA32**	80D4	**HA32**	56C/143/145TC
216.0	1.6	414	8.11	664	262	**CHA32**	80D4	**HA32**	56C/143/145TC
160.0	1.4	558	10.94	797	290	**CHA32**	80D4	**HA32**	56C/143/145TC
132.0	1.0	676	13.25	708	309	**CHA32**	80D4	**HA32**	56C/143/145TC
1208.0	3.0	75	1.45	221	107	**CHA41**	80D4	**HA41**	56C/143/145TC
594.0	1.5	152	2.94	221	135	**CHA41**	80D4	**HA41**	56C/143/145TC
368.0	1.1	245	4.75	266	159	**CHA41**	80D4	**HA41**	56C/143/145TC
269.0	3.7	332	6.52	1239	513	**CHA42**	80D4/90S4	**HA42**	56C/143/145TC
216.0	2.8	414	8.11	1151	552	**CHA42**	80D4/90S4	**HA42**	56C/143/145TC
160.0	2.4	558	10.94	1328	610	**CHA42**	80D4/90S4	**HA42**	56C/143/145TC
132.0	1.8	676	13.25	1239	651	**CHA42**	80D4/90S4	**HA42**	56C/143/145TC
106.0	1.5	841	16.49	1239	700	**CHA42**	80D4/90S4	**HA42**	56C/143/145TC
86.0	1.3	1033	20.26	1328	749	**CHA42**	80D4/90S4	**HA42**	56C/143/145TC
71.0	1.1	1252	24.55	1372	799	**CHA42**	80D4/90S4	**HA42**	56C/143/145TC
594.0	2.3	152	2.94	354	373	**CHA51**	80D4/90S4	**HA51**	56C/143/145TC
368.0	1.8	245	4.75	443	437	**CHA51**	80D4/90S4	**HA51**	56C/143/145TC
321.0	1.6	281	5.45	443	458	**CHA51**	80D4/90S4	**HA51**	56C/143/145TC
121.0	3.4	740	14.50	2478	838	**CHA52**	80D4/90S4	**HA52**	56C/143/145TC
103.0	3.1	863	16.91	2655	882	**CHA52**	80D4/90S4	**HA52**	56C/143/145TC
86.0	2.5	1044	20.46	2567	940	**CHA52**	80D4/90S4	**HA52**	56C/143/145TC
69.0	1.9	1297	25.43	2478	1011	**CHA52**	80D4/90S4	**HA52**	56C/143/145TC
59.0	1.7	1525	29.89	2655	1066	**CHA52**	80D4/90S4	**HA52**	56C/143/145TC
48.0	1.4	1845	36.17	2655	1136	**CHA52**	80D4/90S4	**HA52**	56C/143/145TC
39.0	1.1	2293	44.95	2478	1222	**CHA52**	80D4/90S4	**HA52**	56C/143/145TC
35.0	1.0	2539	49.78	2655	1264	**CHA52**	80D4/90S4	**HA52**	56C/143/145TC
35.0	1.1	2487	49.80	2655	1264	**CHA53**	80D4/90S4	**HA53**	56C/143/145TC
226.0	2.0	399	7.75	797	770	**CHA61**	80D4/90S4	**HA61**	56C/143/145TC
164.0	1.1	550	10.67	620	857	**CHA61**	80D4/90S4	**HA61**	56C/143/145TC
86.0	3.9	1044	20.46	4071	1387	**CHA62**	80D4/90S4	**HA62**	56C/143/145TC
69.0	2.9	1297	25.43	3806	1492	**CHA62**	80D4/90S4	**HA62**	56C/143/145TC
59.0	2.6	1525	29.89	3983	1574	**CHA62**	80D4/90S4	**HA62**	56C/143/145TC
48.0	2.3	1845	36.17	4160	1677	**CHA62**	80D4/90S4	**HA62**	56C/143/145TC
39.0	1.7	2293	44.95	3894	1798	**CHA62**	80D4/90S4	**HA62**	56C/143/145TC
35.0	1.3	2539	49.78	3275	1798	**CHA62**	80D4/90S4	**HA62**	56C/143/145TC
28.0	1.2	3155	61.87	3894	1798	**CHA62**	80D4/90S4	**HA62**	56C/143/145TC
35.0	1.7	2487	49.80	4248	1798	**CHA63**	80D4/90S4	**HA63**	56C/143/145TC
29.0	1.4	3009	60.25	4248	1798	**CHA63**	80D4/90S4	**HA63**	56C/143/145TC
23.0	1.1	3740	74.88	4248	1798	**CHA63**	80D4/90S4	**HA63**	56C/143/145TC

2 HP

Output speed [rpm]	Service factor sf	Output torque [in-lbs]	Exact ratio i	Max. torque [in-lbs]	OHL	Gearmotor		Gear Reducer	
					Output shaft [lbs]	Reducer	Motor	Reducer	NEMA C-input
373.0	2.6	327	4.70	841	745	**CH032**	90LA4	**PH032**	56C/143/145TC
281.0	2.1	433	6.23	929	799	**CH032**	90LA4	**PH032**	56C/143/145TC
225.0	2.0	540	7.76	1106	840	**CH032**	90LA4	**PH032**	56C/143/145TC
197.0	1.9	617	8.87	1151	865	**CH032**	90LA4	**PH032**	56C/143/145TC
173.0	1.8	706	10.14	1239	888	**CH032**	90LA4	**PH032**	56C/143/145TC
149.0	1.6	818	11.76	1283	913	**CH032**	90LA4	**PH032**	56C/143/145TC
128.0	1.6	954	13.72	1505	936	**CH032**	90LA4	**PH032**	56C/143/145TC
119.0	1.5	1019	14.66	1505	946	**CH032**	90LA4	**PH032**	56C/143/145TC
104.0	1.4	1166	16.77	1682	963	**CH032**	90LA4	**PH032**	56C/143/145TC
96.0	1.4	1266	18.20	1770	972	**CH032**	90LA4	**PH032**	56C/143/145TC
88.0	1.3	1384	19.90	1770	980	**CH032**	90LA4	**PH032**	56C/143/145TC
77.0	1.1	1577	22.68	1770	989	**CH032**	90LA4	**PH032**	56C/143/145TC
73.0	1.1	1658	23.83	1770	991	**CH032**	90LA4	**PH032**	56C/143/145TC
1217.0	2.2	101	1.44	221	136	**CH041**	90LA4	**PH041**	56C/143/145TC
875.0	1.6	141	2.00	221	148	**CH041**	90LA4	**PH041**	56C/143/145TC
688.0	1.5	179	2.55	266	158	**CH041**	90LA4	**PH041**	56C/143/145TC
645.0	1.4	191	2.71	266	160	**CH041**	90LA4	**PH041**	56C/143/145TC
564.0	1.6	218	3.11	354	165	**CH041**	90LA4	**PH041**	56C/143/145TC
488.0	1.6	252	3.59	398	171	**CH041**	90LA4	**PH041**	56C/143/145TC
417.0	1.3	295	4.20	398	177	**CH041**	90LA4	**PH041**	56C/143/145TC
350.0	1.1	351	5.00	398	183	**CH041**	90LA4	**PH041**	56C/143/145TC
318.0	1.1	387	5.50	443	186	**CH041**	90LA4	**PH041**	56C/143/145TC
287.0	1.0	428	6.09	443	189	**CH041**	90LA4	**PH041**	56C/143/145TC
320.0	3.7	380	5.46	1416	1007	**CH042**	90LA4	**PH042**	56C/143/145TC
243.0	2.8	500	7.19	1416	1086	**CH042**	90LA4	**PH042**	56C/143/145TC
196.0	3.0	620	8.91	1859	1149	**CH042**	90LA4	**PH042**	56C/143/145TC
170.0	3.0	717	10.31	2124	1193	**CH042**	90LA4	**PH042**	56C/143/145TC
148.0	2.7	821	11.80	2213	1233	**CH042**	90LA4	**PH042**	56C/143/145TC
129.0	2.3	944	13.57	2213	1274	**CH042**	90LA4	**PH042**	56C/143/145TC
110.0	2.0	1110	15.96	2213	1320	**CH042**	90LA4	**PH042**	56C/143/145TC
92.0	1.7	1321	19.00	2213	1369	**CH042**	90LA4	**PH042**	56C/143/145TC
83.0	1.5	1461	21.00	2213	1396	**CH042**	90LA4	**PH042**	56C/143/145TC
76.0	1.4	1610	23.15	2301	1420	**CH042**	90LA4	**PH042**	56C/143/145TC
67.0	1.3	1811	26.04	2301	1448	**CH042**	90LA4	**PH042**	56C/143/145TC
64.0	1.3	1913	27.50	2478	1460	**CH042**	90LA4	**PH042**	56C/143/145TC
57.0	1.2	2118	30.45	2478	1482	**CH042**	90LA4	**PH042**	56C/143/145TC
51.0	1.0	2372	34.10	2478	1484	**CH042**	90LA4	**PH042**	56C/143/145TC
1375.0	4.0	89	1.27	354	336	**CH051**	90LA4	**PH051**	143/145TC
824.0	3.6	149	2.13	531	394	**CH051**	90LA4	**PH051**	143/145TC
681.0	3.4	181	2.57	620	417	**CH051**	90LA4	**PH051**	56C/143/145TC
553.0	3.2	223	3.17	708	444	**CH051**	90LA4	**PH051**	56C/143/145TC

2 HP

Output speed [rpm]	Service factor sf	Output torque [in-lbs]	Exact ratio i	Max. torque [in-lbs]	OHL	Gearmotor		Gear Reducer	
					Output shaft [lbs]	Reducer	Motor	Reducer	NEMA C-input
475.0	3.1	259	3.69	797	464	**CH051**	90LA4	**PH051**	56C/143/145TC
438.0	2.8	281	4.00	797	475	**CH051**	90LA4	**PH051**	56C/143/145TC
367.0	2.5	335	4.77	841	500	**CH051**	90LA4	**PH051**	56C/143/145TC
333.0	2.4	369	5.25	885	514	**CH051**	90LA4	**PH051**	56C/143/145TC
301.0	2.2	409	5.82	885	529	**CH051**	90LA4	**PH051**	56C/143/145TC
239.0	1.7	515	7.33	885	562	**CH051**	90LA4	**PH051**	56C/143/145TC
209.0	1.5	589	8.38	885	562	**CH051**	90LA4	**PH051**	56C/143/145TC
123.0	3.8	990	14.24	3806	1682	**CH052**	90LA4	**PH052**	56C/143/145TC
105.0	3.5	1154	16.59	3983	1751	**CH052**	90LA4	**PH052**	56C/143/145TC
97.0	3.3	1252	18.00	4071	1788	**CH052**	90LA4	**PH052**	56C/143/145TC
88.0	2.9	1389	19.97	4071	1798	**CH052**	90LA4	**PH052**	56C/143/145TC
81.0	2.8	1507	21.67	4160	1798	**CH052**	90LA4	**PH052**	56C/143/145TC
71.0	2.4	1718	24.71	4160	1798	**CH052**	90LA4	**PH052**	56C/143/145TC
67.0	2.4	1821	26.18	4337	1798	**CH052**	90LA4	**PH052**	56C/143/145TC
62.0	2.2	1978	28.44	4337	1798	**CH052**	90LA4	**PH052**	56C/143/145TC
56.0	2.0	2192	31.52	4337	1798	**CH052**	90LA4	**PH052**	56C/143/145TC
53.0	1.9	2295	33.00	4337	1798	**CH052**	90LA4	**PH052**	56C/143/145TC
45.0	1.6	2711	38.98	4337	1798	**CH052**	90LA4	**PH052**	56C/143/145TC
39.0	1.4	3155	45.36	4337	1798	**CH052**	90LA4	**PH052**	56C/143/145TC
36.0	1.3	3417	49.13	4337	1798	**CH052**	90LA4	**PH052**	56C/143/145TC
31.0	1.1	3903	56.11	4337	1798	**CH052**	90LA4	**PH052**	56C/143/145TC
30.0	1.1	4005	58.81	4425	1798	**CH053**	90LA4	**PH053**	56C/143/145TC
301.0	3.7	409	5.82	1505	832	**CH061**	90LA4	**PH061**	56C/143/145TC
239.0	2.9	515	7.33	1505	832	**CH061**	90LA4	**PH061**	56C/143/145TC
209.0	2.6	589	8.38	1505	832	**CH061**	90LA4	**PH061**	56C/143/145TC
60.0	3.5	2040	29.33	7081	2698	**CH062**	90LA4	**PH062**	56C/143/145TC
55.0	3.4	2226	32.00	7523	2698	**CH062**	90LA4	**PH062**	56C/143/145TC
47.0	2.8	2573	36.99	7081	2698	**CH062**	90LA4	**PH062**	56C/143/145TC
43.0	2.7	2805	40.33	7523	2698	**CH062**	90LA4	**PH062**	56C/143/145TC
38.0	2.3	3204	46.06	7523	2698	**CH062**	90LA4	**PH062**	56C/143/145TC
35.0	2.2	3368	49.45	7523	2698	**CH063**	90LA4	**PH063**	56C/143/145TC
32.0	2.0	3719	54.61	7523	2698	**CH063**	90LA4	**PH063**	56C/143/145TC
26.0	1.6	4631	68.00	7523	2698	**CH063**	90LA4	**PH063**	56C/143/145TC
20.0	1.3	5844	85.82	7523	2698	**CH063**	90LA4	**PH063**	56C/143/145TC
18.0	1.2	6453	94.76	7523	2698	**CH063**	90LA4	**PH063**	56C/143/145TC
31.0	3.7	3850	56.53	14161	4047	**CH083**	90LA4	**PH083**	56C/143/145TC
24.0	3.3	4868	71.48	15931	4047	**CH083**	90LA4	**PH083**	56C/143/145TC
22.0	3.0	5371	78.87	15931	4047	**CH083**	90LA4	**PH083**	56C/143/145TC
20.0	2.7	5827	85.56	15931	4047	**CH083**	90LA4	**PH083**	56C/143/145TC
18.0	2.4	6680	98.09	15931	4047	**CH083**	90LA4	**PH083**	56C/143/145TC
16.0	2.1	7681	112.78	15931	4047	**CH083**	90LA4	**PH083**	56C/143/145TC

2 HP

Output speed [rpm]	Service factor sf	Output torque [in-lbs]	Exact ratio i	Max. torque [in-lbs]	OHL	Gearmotor		Gear Reducer	
					Output shaft [lbs]	Reducer	Motor	Reducer	NEMA C-input
14.0	1.9	8475	124.44	15931	4047	**CH083**	90LA4	**PH083**	56C/143/145TC
12.0	1.6	9681	142.15	15931	4047	**CH083**	90LA4	**PH083**	56C/143/145TC
11.0	1.5	10540	154.76	15931	4047	**CH083**	90LA4	**PH083**	56C/143/145TC
11.0	1.4	11056	162.35	15931	4047	**CH083**	90LA4	**PH083**	56C/143/145TC
9.8	1.3	12199	179.13	15931	4047	**CH083**	90LA4	**PH083**	56C/143/145TC
9.0	1.2	13285	195.07	15931	4047	**CH083**	90LA4	**PH083**	56C/143/145TC
7.9	1.1	15172	222.78	15931	4047	**CH083**	90LA4	**PH083**	56C/143/145TC
12.0	3.2	9767	143.42	30978	4946	**CH103**	90LA4	**PH103**	143/145TC
11.0	2.8	10952	160.82	30978	4946	**CH103**	90LA4	**PH103**	143/145TC
9.7	2.5	12332	181.07	30978	4946	**CH103**	90LA4	**PH103**	143/145TC
9.0	2.3	13226	194.21	30978	4946	**CH103**	90LA4	**PH103**	143/145TC
8.1	2.1	14673	215.45	30978	4946	**CH103**	90LA4	**PH103**	143/145TC
7.2	1.9	16521	242.59	31863	4946	**CH103**	90LA4	**PH103**	143/145TC
325.0	1.9	374	5.38	708	229	**-**	-	**HA32**	56C/143/145TC
269.0	1.6	453	6.52	708	244	**-**	-	**HA32**	56C/143/145TC
216.0	1.2	564	8.11	664	262	**-**	-	**HA32**	56C/143/145TC
160.0	1.0	761	10.94	797	290	**-**	-	**HA32**	56C/143/145TC
1208.0	2.2	102	1.45	221	107	**-**	-	**HA41**	56C/143/145TC
594.0	1.1	207	2.94	221	135	**-**	-	**HA41**	56C/143/145TC
325.0	3.3	374	5.38	1239	482	**CHA42**	90LA4	**HA42**	56C/143/145TC
269.0	2.7	453	6.52	1239	513	**CHA42**	90LA4	**HA42**	56C/143/145TC
216.0	2.0	564	8.11	1151	552	**CHA42**	90LA4	**HA42**	56C/143/145TC
160.0	1.7	761	10.94	1328	610	**CHA42**	90LA4	**HA42**	56C/143/145TC
132.0	1.3	922	13.25	1239	651	**CHA42**	90LA4	**HA42**	56C/143/145TC
106.0	1.1	1147	16.49	1239	700	**CHA42**	90LA4	**HA42**	56C/143/145TC
1208.0	3.5	102	1.45	354	294	**CHA51**	90LA4	**HA51**	56C/143/145TC
594.0	1.7	207	2.94	354	373	**CHA51**	90LA4	**HA51**	56C/143/145TC
368.0	1.3	334	4.75	443	437	**CHA51**	90LA4	**HA51**	56C/143/145TC
321.0	1.2	383	5.45	443	458	**CHA51**	90LA4	**HA51**	56C/143/145TC
226.0	3.9	538	7.73	2124	680	**CHA52**	90LA4	**HA52**	56C/143/145TC
181.0	4.0	671	9.64	2655	731	**CHA52**	90LA4	**HA52**	56C/143/145TC
150.0	3.1	811	11.67	2478	779	**CHA52**	90LA4	**HA52**	56C/143/145TC
121.0	2.5	1008	14.50	2478	838	**CHA52**	90LA4	**HA52**	56C/143/145TC
103.0	2.3	1176	16.91	2655	882	**CHA52**	90LA4	**HA52**	56C/143/145TC
86.0	1.8	1423	20.46	2567	940	**CHA52**	90LA4	**HA52**	56C/143/145TC
69.0	1.4	1769	25.43	2478	1011	**CHA52**	90LA4	**HA52**	56C/143/145TC
59.0	1.3	2079	29.89	2655	1066	**CHA52**	90LA4	**HA52**	56C/143/145TC
48.0	1.1	2515	36.17	2655	1136	**CHA52**	90LA4	**HA52**	56C/143/145TC
399.0	3.2	308	4.38	974	637	**CHA61**	90LA4	**HA61**	56C/143/145TC
226.0	1.5	545	7.75	797	770	**CHA61**	90LA4	**HA61**	56C/143/145TC
121.0	3.7	1008	14.50	3717	1237	**CHA62**	90LA4	**HA62**	56C/143/145TC

2 HP

Output speed [rpm]	Service factor sf	Output torque [in-lbs]	Exact ratio i	Max. torque [in-lbs]	OHL	Gearmotor		Gear Reducer	
					Output shaft [lbs]	Reducer	Motor	Reducer	NEMA C-input
103.0	3.8	1176	16.91	4425	1302	**CHA62**	90LA4	**HA62**	56C/143/145TC
86.0	2.9	1423	20.46	4071	1387	**CHA62**	90LA4	**HA62**	56C/143/145TC
69.0	2.2	1769	25.43	3806	1492	**CHA62**	90LA4	**HA62**	56C/143/145TC
59.0	1.9	2079	29.89	3983	1574	**CHA62**	90LA4	**HA62**	56C/143/145TC
48.0	1.7	2515	36.17	4160	1677	**CHA62**	90LA4	**HA62**	56C/143/145TC
39.0	1.2	3126	44.95	3894	1798	**CHA62**	90LA4	**HA62**	56C/143/145TC
35.0	1.3	3391	49.80	4248	1798	**CHA63**	90LA4	**HA63**	56C/143/145TC
29.0	1.0	4103	60.25	4248	1798	**CHA63**	90LA4	**HA63**	56C/143/145TC

3 HP

Output speed [rpm]	Service factor sf	Output torque [in-lbs]	Exact ratio i	Max. torque [in-lbs]	OHL	Gearmotor		Gear Reducer	
					Output shaft [lbs]	Reducer	Motor	Reducer	NEMA C-input
373.0	1.8	479	4.70	841	705	**CH032**	100LA4	**PH032**	182/184TC
281.0	1.5	635	6.23	929	746	**CH032**	100LA4	**PH032**	182/184TC
225.0	1.4	792	7.76	1106	774	**CH032**	100LA4	**PH032**	182/184TC
197.0	1.3	904	8.87	1151	789	**CH032**	100LA4	**PH032**	182/184TC
173.0	1.2	1035	10.14	1239	801	**CH032**	100LA4	**PH032**	182/184TC
149.0	1.1	1200	11.76	1283	812	**CH032**	100LA4	**PH032**	182/184TC
128.0	1.1	1400	13.72	1505	819	**CH032**	100LA4	**PH032**	182/184TC
119.0	1.0	1495	14.66	1505	820	**CH032**	100LA4	**PH032**	182/184TC
1217.0	1.5	148	1.44	221	130	**-**	-	**PH041**	182/184TC
875.0	1.1	206	2.00	221	141	**-**	-	**PH041**	182/184TC
688.0	1.0	262	2.55	266	148	**-**	-	**PH041**	182/184TC
564.0	1.1	320	3.11	354	153	**-**	-	**PH041**	182/184TC
488.0	1.1	370	3.59	398	157	**-**	-	**PH041**	182/184TC
320.0	2.5	557	5.46	1416	970	**CH042**	100LA4	**PH042**	182/184TC
243.0	1.9	733	7.19	1416	1037	**CH042**	100LA4	**PH042**	182/184TC
196.0	2.0	909	8.91	1859	1088	**CH042**	100LA4	**PH042**	182/184TC
170.0	2.0	1052	10.31	2124	1122	**CH042**	100LA4	**PH042**	182/184TC
148.0	1.8	1204	11.80	2213	1152	**CH042**	100LA4	**PH042**	182/184TC
129.0	1.6	1384	13.57	2213	1181	**CH042**	100LA4	**PH042**	182/184TC
110.0	1.4	1628	15.96	2213	1211	**CH042**	100LA4	**PH042**	182/184TC
92.0	1.1	1938	19.00	2213	1239	**CH042**	100LA4	**PH042**	182/184TC
83.0	1.0	2142	21.00	2213	1252	**CH042**	100LA4	**PH042**	182/184TC
1375.0	2.7	131	1.27	354	331	**CH051**	100LA4	**PH051**	182/184TC
1233.0	3.6	146	1.42	531	342	**CH051**	100LA4	**PH051**	182/184TC
824.0	2.4	219	2.13	531	386	**CH051**	100LA4	**PH051**	182/184TC
681.0	2.3	265	2.57	620	408	**CH051**	100LA4	**PH051**	182/184TC
553.0	2.2	326	3.17	708	432	**CH051**	100LA4	**PH051**	182/184TC
475.0	2.1	380	3.69	797	451	**CH051**	100LA4	**PH051**	182/184TC
438.0	1.9	412	4.00	797	461	**CH051**	100LA4	**PH051**	182/184TC

3 HP

Output speed [rpm]	Service factor sf	Output torque [in-lbs]	Exact ratio i	Max. torque [in-lbs]	OHL	Gearmotor		Gear Reducer	
					Output shaft [lbs]	Reducer	Motor	Reducer	NEMA C-input
367.0	1.7	492	4.77	841	483	**CH051**	100LA4	**PH051**	182/184TC
333.0	1.6	541	5.25	885	495	**CH051**	100LA4	**PH051**	182/184TC
301.0	1.5	600	5.82	885	508	**CH051**	100LA4	**PH051**	182/184TC
306.0	3.9	584	5.73	2301	1267	**CH052**	100LA4	**PH052**	182/184TC
254.0	3.6	703	6.89	2567	1334	**CH052**	100LA4	**PH052**	182/184TC
205.0	3.5	870	8.53	3009	1412	**CH052**	100LA4	**PH052**	182/184TC
183.0	3.4	975	9.56	3275	1455	**CH052**	100LA4	**PH052**	182/184TC
152.0	2.9	1174	11.51	3452	1524	**CH052**	100LA4	**PH052**	182/184TC
123.0	2.6	1452	14.24	3806	1604	**CH052**	100LA4	**PH052**	182/184TC
105.0	2.4	1693	16.59	3983	1660	**CH052**	100LA4	**PH052**	182/184TC
97.0	2.2	1836	18.00	4071	1689	**CH052**	100LA4	**PH052**	182/184TC
88.0	2.0	2038	19.97	4071	1725	**CH052**	100LA4	**PH052**	182/184TC
81.0	1.9	2210	21.67	4160	1753	**CH052**	100LA4	**PH052**	182/184TC
71.0	1.7	2520	24.71	4160	1796	**CH052**	100LA4	**PH052**	182/184TC
67.0	1.6	2671	26.18	4337	1798	**CH052**	100LA4	**PH052**	182/184TC
62.0	1.5	2901	28.44	4337	1798	**CH052**	100LA4	**PH052**	182/184TC
56.0	1.3	3215	31.52	4337	1798	**CH052**	100LA4	**PH052**	182/184TC
45.0	1.1	3977	38.98	4337	1798	**CH052**	100LA4	**PH052**	182/184TC
553.0	3.5	326	3.17	1151	691	**CH061**	100LA4	**PH061**	182/184TC
475.0	3.5	380	3.69	1328	722	**CH061**	100LA4	**PH061**	182/184TC
438.0	3.2	412	4.00	1328	738	**CH061**	100LA4	**PH061**	182/184TC
367.0	2.9	492	4.77	1416	775	**CH061**	100LA4	**PH061**	182/184TC
333.0	2.8	541	5.25	1505	796	**CH061**	100LA4	**PH061**	182/184TC
301.0	2.5	600	5.82	1505	818	**CH061**	100LA4	**PH061**	182/184TC
239.0	2.0	756	7.33	1505	832	**CH061**	100LA4	**PH061**	182/184TC
209.0	1.7	863	8.38	1505	832	**CH061**	100LA4	**PH061**	182/184TC
86.0	3.6	2069	20.28	7523	2698	**CH062**	100LA4	**PH062**	182/184TC
75.0	3.2	2374	23.27	7523	2698	**CH062**	100LA4	**PH062**	182/184TC
68.0	2.9	2621	25.70	7523	2698	**CH062**	100LA4	**PH062**	182/184TC
60.0	2.4	2992	29.33	7081	2698	**CH062**	100LA4	**PH062**	182/184TC
55.0	2.3	3264	32.00	7523	2698	**CH062**	100LA4	**PH062**	182/184TC
47.0	1.9	3773	36.99	7081	2698	**CH062**	100LA4	**PH062**	182/184TC
43.0	1.8	4114	40.33	7523	2698	**CH062**	100LA4	**PH062**	182/184TC
38.0	1.6	4699	46.06	7523	2698	**CH062**	100LA4	**PH062**	182/184TC
35.0	1.5	4940	49.45	7523	2698	**CH063**	100LA4	**PH063**	182/184TC
32.0	1.4	5454	54.61	7523	2698	**CH063**	100LA4	**PH063**	182/184TC
26.0	1.1	6792	68.00	7523	2698	**CH063**	100LA4	**PH063**	182/184TC
207.0	3.6	870	8.44	3098	899	**CH081**	100LA4	**PH081**	182/184TC
45.0	3.6	3948	38.70	14161	4047	**CH082**	100LA4	**PH082**	182/184TC
41.0	3.2	4361	42.75	14161	4047	**CH082**	100LA4	**PH082**	182/184TC
36.0	2.9	4910	48.13	14161	4047	**CH082**	100LA4	**PH082**	182/184TC

3 HP

Output speed [rpm]	Service factor sf	Output torque [in-lbs]	Exact ratio i	Max. torque [in-lbs]	OHL	Gearmotor		Gear Reducer	
					Output shaft [lbs]	Reducer	Motor	Reducer	NEMA C-input
31.0	2.5	5646	56.53	14161	4047	**CH083**	100LA4	**PH083**	182/184TC
24.0	2.2	7140	71.48	15931	4047	**CH083**	100LA4	**PH083**	182/184TC
22.0	2.0	7878	78.87	15931	4047	**CH083**	100LA4	**PH083**	182/184TC
20.0	1.9	8546	85.56	15931	4047	**CH083**	100LA4	**PH083**	182/184TC
18.0	1.6	9797	98.09	15931	4047	**CH083**	100LA4	**PH083**	182/184TC
16.0	1.4	11265	112.78	15931	4047	**CH083**	100LA4	**PH083**	182/184TC
14.0	1.3	12430	124.44	15931	4047	**CH083**	100LA4	**PH083**	182/184TC
12.0	1.1	14199	142.15	15931	4047	**CH083**	100LA4	**PH083**	182/184TC
11.0	1.0	15458	154.76	15931	4047	**CH083**	100LA4	**PH083**	182/184TC
22.0	3.9	7972	79.82	30978	4946	**CH103**	100LA4	**PH103**	182/184TC
21.0	3.7	8406	84.16	30978	4946	**CH103**	100LA4	**PH103**	182/184TC
19.0	3.3	9326	93.36	30978	4946	**CH103**	100LA4	**PH103**	182/184TC
17.0	3.1	9995	100.07	30978	4946	**CH103**	100LA4	**PH103**	182/184TC
14.0	2.6	12070	120.84	30978	4946	**CH103**	100LA4	**PH103**	182/184TC
13.0	2.3	13391	134.06	30978	4946	**CH103**	100LA4	**PH103**	182/184TC
12.0	2.2	14325	143.42	30978	4946	**CH103**	100LA4	**PH103**	182/184TC
11.0	1.9	16063	160.82	30978	4946	**CH103**	100LA4	**PH103**	182/184TC
9.7	1.7	18086	181.07	30978	4946	**CH103**	100LA4	**PH103**	182/184TC
9.0	1.6	19398	194.21	30978	4946	**CH103**	100LA4	**PH103**	182/184TC
8.1	1.4	21520	215.45	30978	4946	**CH103**	100LA4	**PH103**	182/184TC
7.2	1.3	24230	242.59	31863	4946	**CH103**	100LA4	**PH103**	182/184TC
15.0	3.7	11848	118.62	44254	6744	**CH123**	100LA4	**PH123**	182/184TC
14.0	3.5	12803	128.18	44254	6744	**CH123**	100LA4	**PH123**	182/184TC
12.0	3.1	14462	144.79	44254	6744	**CH123**	100LA4	**PH123**	182/184TC
11.0	2.9	15504	155.22	44254	6744	**CH123**	100LA4	**PH123**	182/184TC
10.0	2.6	17260	172.80	44254	6744	**CH123**	100LA4	**PH123**	182/184TC
9.2	2.3	18897	189.19	44254	6744	**CH123**	100LA4	**PH123**	182/184TC
8.4	2.1	20719	207.43	44254	6744	**CH123**	100LA4	**PH123**	182/184TC
7.6	1.9	23066	230.92	44254	6744	**CH123**	100LA4	**PH123**	182/184TC
6.7	1.7	25934	259.64	44254	6744	**CH123**	100LA4	**PH123**	182/184TC
9.4	3.8	18574	185.96	70806	12364	**-**	-	**PH143**	182/184TC
8.5	3.4	20584	206.08	70806	12364	**-**	-	**PH143**	182/184TC
281.0	3.3	635	6.22	2124	632	**CHA52**	100LA4	**HA52**	182/184TC
226.0	2.7	789	7.73	2124	680	**CHA52**	100LA4	**HA52**	182/184TC
181.0	2.7	984	9.64	2655	731	**CHA52**	100LA4	**HA52**	182/184TC
150.0	2.1	1190	11.67	2478	779	**CHA52**	100LA4	**HA52**	182/184TC
121.0	1.7	1479	14.50	2478	838	**CHA52**	100LA4	**HA52**	182/184TC
103.0	1.5	1725	16.91	2655	882	**CHA52**	100LA4	**HA52**	182/184TC
86.0	1.2	2087	20.46	2567	940	**CHA52**	100LA4	**HA52**	182/184TC
700.0	3.1	258	2.50	797	528	**CHA61**	100LA4	**HA61**	182/184TC
399.0	2.2	452	4.38	974	637	**CHA61**	100LA4	**HA61**	182/184TC

3 HP

Output speed [rpm]	Service factor sf	Output torque [in-lbs]	Exact ratio i	Max. torque [in-lbs]	OHL	Gearmotor		Gear Reducer	
					Output shaft [lbs]	Reducer	Motor	Reducer	NEMA C-input
150.0	3.3	1190	11.67	3894	1150	**CHA62**	100LA4	**HA62**	182/184TC
121.0	2.5	1479	14.50	3717	1237	**CHA62**	100LA4	**HA62**	182/184TC
103.0	2.6	1725	16.91	4425	1302	**CHA62**	100LA4	**HA62**	182/184TC
86.0	2.0	2087	20.46	4071	1387	**CHA62**	100LA4	**HA62**	182/184TC
69.0	1.5	2594	25.43	3806	1492	**CHA62**	100LA4	**HA62**	182/184TC

5 HP

Output speed [rpm]	Service factor sf	Output torque [in-lbs]	Exact ratio i	Max. torque [in-lbs]	OHL	Gearmotor		Gear Reducer	
					Output shaft [lbs]	Reducer	Motor	Reducer	NEMA C-input
320.0	1.4	1013	5.46	1416	874	**CH042**	112MA4	**PH042**	182/184TC
243.0	1.1	1333	7.19	1416	911	**CH042**	112MA4	**PH042**	182/184TC
196.0	1.1	1653	8.91	1859	932	**CH042**	112MA4	**PH042**	182/184TC
170.0	1.1	1913	10.31	2124	941	**CH042**	112MA4	**PH042**	182/184TC
148.0	1.0	2189	11.80	2213	944	**CH042**	112MA4	**PH042**	182/184TC
1375.0	1.5	239	1.27	354	319	**CH051**	112MA4	**PH051**	182/184TC
1233.0	2.0	266	1.42	531	329	**CH051**	112MA4	**PH051**	182/184TC
824.0	1.3	398	2.13	531	366	**CH051**	112MA4	**PH051**	182/184TC
681.0	1.3	482	2.57	620	384	**CH051**	112MA4	**PH051**	182/184TC
553.0	1.2	593	3.17	708	403	**CH051**	112MA4	**PH051**	182/184TC
475.0	1.2	691	3.69	797	417	**CH051**	112MA4	**PH051**	182/184TC
438.0	1.1	750	4.00	797	424	**CH051**	112MA4	**PH051**	182/184TC
306.0	2.2	1062	5.73	2301	1186	**CH052**	112MA4	**PH052**	182/184TC
254.0	2.0	1279	6.89	2567	1236	**CH052**	112MA4	**PH052**	182/184TC
205.0	1.9	1582	8.53	3009	1291	**CH052**	112MA4	**PH052**	182/184TC
183.0	1.8	1774	9.56	3275	1319	**CH052**	112MA4	**PH052**	182/184TC
152.0	1.6	2135	11.51	3452	1361	**CH052**	112MA4	**PH052**	182/184TC
123.0	1.4	2641	14.24	3806	1402	**CH052**	112MA4	**PH052**	182/184TC
105.0	1.3	3078	16.59	3983	1425	**CH052**	112MA4	**PH052**	182/184TC
97.0	1.2	3338	18.00	4071	1434	**CH052**	112MA4	**PH052**	182/184TC
88.0	1.1	3705	19.97	4071	1443	**CH052**	112MA4	**PH052**	182/184TC
81.0	1.0	4019	21.67	4160	1446	**CH052**	112MA4	**PH052**	182/184TC
1302.0	2.8	252	1.34	708	518	**CH061**	112MA4	**PH061**	182/184TC
824.0	2.7	398	2.13	1062	589	**CH061**	112MA4	**PH061**	182/184TC
681.0	2.2	482	2.57	1062	619	**CH061**	112MA4	**PH061**	182/184TC
553.0	1.9	593	3.17	1151	653	**CH061**	112MA4	**PH061**	182/184TC
475.0	1.9	691	3.69	1328	677	**CH061**	112MA4	**PH061**	182/184TC
438.0	1.8	750	4.00	1328	690	**CH061**	112MA4	**PH061**	182/184TC
367.0	1.6	894	4.77	1416	717	**CH061**	112MA4	**PH061**	182/184TC
333.0	1.5	984	5.25	1505	732	**CH061**	112MA4	**PH061**	182/184TC
301.0	1.4	1090	5.82	1505	747	**CH061**	112MA4	**PH061**	182/184TC
239.0	1.1	1374	7.33	1505	778	**CH061**	112MA4	**PH061**	182/184TC

5 HP

Output speed [rpm]	Service factor sf	Output torque [in-lbs]	Exact ratio i	Max. torque [in-lbs]	OHL	Gearmotor		Gear Reducer	
					Output shaft [lbs]	Reducer	Motor	Reducer	NEMA C-input
237.0	3.6	1371	7.39	4868	2277	**CH062**	112MA4	**PH062**	182/184TC
206.0	3.4	1577	8.50	5310	2365	**CH062**	112MA4	**PH062**	182/184TC
186.0	3.1	1741	9.39	5310	2428	**CH062**	112MA4	**PH062**	182/184TC
150.0	2.7	2168	11.69	5753	2568	**CH062**	112MA4	**PH062**	182/184TC
138.0	2.6	2349	12.67	6196	2620	**CH062**	112MA4	**PH062**	182/184TC
119.0	2.3	2736	14.75	6196	2698	**CH062**	112MA4	**PH062**	182/184TC
107.0	2.3	3021	16.29	7081	2698	**CH062**	112MA4	**PH062**	182/184TC
99.0	2.2	3277	17.67	7346	2698	**CH062**	112MA4	**PH062**	182/184TC
86.0	2.0	3762	20.28	7523	2698	**CH062**	112MA4	**PH062**	182/184TC
75.0	1.7	4316	23.27	7523	2698	**CH062**	112MA4	**PH062**	182/184TC
68.0	1.6	4766	25.70	7523	2698	**CH062**	112MA4	**PH062**	182/184TC
60.0	1.3	5440	29.33	7081	2698	**CH062**	112MA4	**PH062**	182/184TC
55.0	1.3	5935	32.00	7523	2698	**CH062**	112MA4	**PH062**	182/184TC
47.0	1.0	6861	36.99	7081	2698	**CH062**	112MA4	**PH062**	182/184TC
43.0	1.0	7481	40.33	7523	2698	**CH062**	112MA4	**PH062**	182/184TC
470.0	3.9	698	3.72	2744	855	**CH081**	112MA4	**PH081**	182/184TC
438.0	3.8	750	4.00	2832	872	**CH081**	112MA4	**PH081**	182/184TC
375.0	3.2	875	4.67	2832	899	**CH081**	112MA4	**PH081**	182/184TC
316.0	2.8	1038	5.54	2921	899	**CH081**	112MA4	**PH081**	182/184TC
288.0	2.6	1140	6.08	3009	899	**CH081**	112MA4	**PH081**	182/184TC
233.0	2.2	1406	7.50	3098	899	**CH081**	112MA4	**PH081**	182/184TC
207.0	2.0	1583	8.44	3098	899	**CH081**	112MA4	**PH081**	182/184TC
94.0	3.9	3436	18.53	13276	3682	**CH082**	112MA4	**PH082**	182/184TC
90.0	3.9	3595	19.38	14161	3726	**CH082**	112MA4	**PH082**	182/184TC
82.0	3.6	3967	21.39	14161	3821	**CH082**	112MA4	**PH082**	182/184TC
77.0	3.3	4229	22.80	14161	3882	**CH082**	112MA4	**PH082**	182/184TC
66.0	2.9	4934	26.60	14161	4031	**CH082**	112MA4	**PH082**	182/184TC
63.0	2.7	5171	27.88	14161	4047	**CH082**	112MA4	**PH082**	182/184TC
56.0	2.5	5778	31.15	14161	4047	**CH082**	112MA4	**PH082**	182/184TC
51.0	2.2	6376	34.38	14161	4047	**CH082**	112MA4	**PH082**	182/184TC
45.0	2.0	7178	38.70	14161	4047	**CH082**	112MA4	**PH082**	182/184TC
41.0	1.8	7929	42.75	14161	4047	**CH082**	112MA4	**PH082**	182/184TC
36.0	1.6	8927	48.13	14161	4047	**CH082**	112MA4	**PH082**	182/184TC
31.0	1.4	10265	56.53	14161	4047	**CH083**	112MA4	**PH083**	182/184TC
24.0	1.2	12981	71.48	15931	4047	**CH083**	112MA4	**PH083**	182/184TC
22.0	1.1	14324	78.87	15931	4047	**CH083**	112MA4	**PH083**	182/184TC
20.0	1.0	15538	85.56	15931	4047	**CH083**	112MA4	**PH083**	182/184TC
208.0	3.7	1574	8.40	5753	1124	**CH101**	112MA4	**PH101**	182/184TC
46.0	3.5	7132	38.45	24782	4946	**CH102**	112MA4	**PH102**	182/184TC
42.0	3.8	7660	41.30	29207	4946	**CH102**	112MA4	**PH102**	182/184TC
38.0	3.4	8498	45.82	29207	4946	**CH102**	112MA4	**PH102**	182/184TC

5 HP

Output speed [rpm]	Service factor sf	Output torque [in-lbs]	Exact ratio i	Max. torque [in-lbs]	OHL	Gearmotor		Gear Reducer	
					Output shaft [lbs]	Reducer	Motor	Reducer	NEMA C-input
34.0	3.1	9555	51.52	29207	4946	**CH102**	112MA4	**PH102**	182/184TC
25.0	2.4	12656	69.69	30978	4946	**CH103**	112MA4	**PH103**	182/184TC
22.0	2.1	14495	79.82	30978	4946	**CH103**	112MA4	**PH103**	182/184TC
21.0	2.0	15284	84.16	30978	4946	**CH103**	112MA4	**PH103**	182/184TC
19.0	1.8	16956	93.36	30978	4946	**CH103**	112MA4	**PH103**	182/184TC
17.0	1.7	18173	100.07	30978	4946	**CH103**	112MA4	**PH103**	182/184TC
14.0	1.4	21946	120.84	30978	4946	**CH103**	112MA4	**PH103**	182/184TC
13.0	1.3	24346	134.06	30978	4946	**CH103**	112MA4	**PH103**	182/184TC
12.0	1.2	26045	143.42	30978	4946	**CH103**	112MA4	**PH103**	182/184TC
11.0	1.1	29206	160.82	30978	4946	**CH103**	112MA4	**PH103**	182/184TC
26.0	3.6	12227	67.32	44254	6744	**CH123**	112MA4	**PH123**	182/184TC
24.0	3.3	13387	73.71	44254	6744	**CH123**	112MA4	**PH123**	182/184TC
21.0	2.9	15134	83.34	44254	6744	**CH123**	112MA4	**PH123**	182/184TC
19.0	2.7	16339	89.97	44254	6744	**CH123**	112MA4	**PH123**	182/184TC
17.0	2.4	18213	100.29	44254	6744	**CH123**	112MA4	**PH123**	182/184TC
16.0	2.2	19676	108.34	44254	6744	**CH123**	112MA4	**PH123**	182/184TC
15.0	2.1	21543	118.62	44254	6744	**CH123**	112MA4	**PH123**	182/184TC
14.0	1.9	23278	128.18	44254	6744	**CH123**	112MA4	**PH123**	182/184TC
12.0	1.7	26294	144.79	44254	6744	**CH123**	112MA4	**PH123**	182/184TC
11.0	1.6	28189	155.22	44254	6744	**CH123**	112MA4	**PH123**	182/184TC
10.0	1.4	31382	172.80	44254	6744	**CH123**	112MA4	**PH123**	182/184TC
9.2	1.3	34359	189.19	44254	6744	**CH123**	112MA4	**PH123**	182/184TC
8.4	1.2	37671	207.43	44254	6744	**CH123**	112MA4	**PH123**	182/184TC
7.6	1.1	41937	230.92	44254	6744	**CH123**	112MA4	**PH123**	182/184TC
11.0	2.5	28027	154.33	70806	12364	**-**	-	**PH143**	182/184TC
9.4	2.1	33771	185.96	70806	12364	**-**	-	**PH143**	182/184TC
8.5	1.9	37426	206.08	70806	12364	**-**	-	**PH143**	182/184TC
340.0	2.2	954	5.14	2124	593	**CHA52**	112MA4	**HA52**	182/184TC
281.0	1.8	1154	6.22	2124	632	**CHA52**	112MA4	**HA52**	182/184TC
226.0	1.5	1434	7.73	2124	680	**CHA52**	112MA4	**HA52**	182/184TC
181.0	1.5	1788	9.64	2655	731	**CHA52**	112MA4	**HA52**	182/184TC
150.0	1.1	2164	11.67	2478	779	**CHA52**	112MA4	**HA52**	182/184TC
1313.0	3.2	250	1.33	797	428	**CHA61**	112MA4	**HA61**	182/184TC
700.0	1.7	469	2.50	797	528	**CHA61**	112MA4	**HA61**	182/184TC
399.0	1.2	822	4.38	974	637	**CHA61**	112MA4	**HA61**	182/184TC
340.0	3.5	954	5.14	3363	875	**CHA62**	112MA4	**HA62**	182/184TC
281.0	2.9	1154	6.22	3363	933	**CHA62**	112MA4	**HA62**	182/184TC
226.0	2.3	1434	7.73	3363	1003	**CHA62**	112MA4	**HA62**	182/184TC
181.0	2.3	1788	9.64	4071	1080	**CHA62**	112MA4	**HA62**	182/184TC
150.0	1.8	2164	11.67	3894	1150	**CHA62**	112MA4	**HA62**	182/184TC
121.0	1.4	2689	14.50	3717	1237	**CHA62**	112MA4	**HA62**	182/184TC

5 HP

Output speed [rpm]	Service factor sf	Output torque [in-lbs]	Exact ratio i	Max. torque [in-lbs]	OHL	Gearmotor		Gear Reducer	
					Output shaft [lbs]	Reducer	Motor	Reducer	NEMA C-input
103.0	1.4	3137	16.91	4425	1302	**CHA62**	112MA4	**HA62**	182/184TC
86.0	1.1	3795	20.46	4071	1387	**CHA62**	112MA4	**HA62**	182/184TC

7.5 HP

Output speed [rpm]	Service factor sf	Output torque [in-lbs]	Exact ratio i	Max. torque [in-lbs]	OHL	Gearmotor		Gear Reducer	
					Output shaft [lbs]	Reducer	Motor	Reducer	NEMA C-input
326.0	3.2	1371	5.38	4425	2027	**CH062**	132S4	**PH062**	213/215TC
295.0	3.2	1514	5.93	4868	2081	**CH062**	132S4	**PH062**	213/215TC
237.0	2.6	1885	7.39	4868	2201	**CH062**	132S4	**PH062**	213/215TC
206.0	2.4	2168	8.50	5310	2277	**CH062**	132S4	**PH062**	213/215TC
186.0	2.2	2393	9.39	5310	2331	**CH062**	132S4	**PH062**	213/215TC
150.0	1.9	2981	11.69	5753	2448	**CH062**	132S4	**PH062**	213/215TC
138.0	1.9	3230	12.67	6196	2489	**CH062**	132S4	**PH062**	213/215TC
119.0	1.6	3762	14.75	6196	2565	**CH062**	132S4	**PH062**	213/215TC
107.0	1.7	4153	16.29	7081	2612	**CH062**	132S4	**PH062**	213/215TC
99.0	1.6	4505	17.67	7346	2649	**CH062**	132S4	**PH062**	213/215TC
86.0	1.5	5172	20.28	7523	2698	**CH062**	132S4	**PH062**	213/215TC
75.0	1.3	5935	23.27	7523	2698	**CH062**	132S4	**PH062**	213/215TC
68.0	1.1	6553	25.70	7523	2698	**CH062**	132S4	**PH062**	213/215TC
689.0	3.8	655	2.54	2478	749	**CH081**	132S4	**PH081**	213/215TC
538.0	3.3	837	3.25	2744	800	**CH081**	132S4	**PH081**	213/215TC
470.0	2.9	959	3.72	2744	828	**CH081**	132S4	**PH081**	213/215TC
438.0	2.7	1031	4.00	2832	843	**CH081**	132S4	**PH081**	213/215TC
375.0	2.4	1203	4.67	2832	876	**CH081**	132S4	**PH081**	213/215TC
316.0	2.0	1427	5.54	2921	899	**CH081**	132S4	**PH081**	213/215TC
288.0	1.9	1568	6.08	3009	899	**CH081**	132S4	**PH081**	213/215TC
233.0	1.6	1933	7.50	3098	899	**CH081**	132S4	**PH081**	213/215TC
207.0	1.4	2176	8.44	3098	899	**CH081**	132S4	**PH081**	213/215TC
237.0	3.8	1886	7.39	7081	2786	**CH082**	132S4	**PH082**	213/215TC
218.0	3.5	2046	8.02	7081	2850	**CH082**	132S4	**PH082**	213/215TC
198.0	3.5	2257	8.85	7966	2928	**CH082**	132S4	**PH082**	213/215TC
159.0	3.5	2807	11.01	9736	3105	**CH082**	132S4	**PH082**	213/215TC
130.0	3.6	3443	13.50	12391	3273	**CH082**	132S4	**PH082**	213/215TC
117.0	3.5	3799	14.90	13276	3354	**CH082**	132S4	**PH082**	213/215TC
105.0	3.1	4237	16.62	13276	3443	**CH082**	132S4	**PH082**	213/215TC
94.0	2.8	4724	18.53	13276	3532	**CH082**	132S4	**PH082**	213/215TC
90.0	2.9	4944	19.38	14161	3569	**CH082**	132S4	**PH082**	213/215TC
82.0	2.6	5455	21.39	14161	3648	**CH082**	132S4	**PH082**	213/215TC
77.0	2.4	5815	22.80	14161	3698	**CH082**	132S4	**PH082**	213/215TC
66.0	2.1	6784	26.60	14161	3816	**CH082**	132S4	**PH082**	213/215TC
63.0	2.0	7111	27.88	14161	3851	**CH082**	132S4	**PH082**	213/215TC

7.5 HP

Output speed [rpm]	Service factor sf	Output torque [in-lbs]	Exact ratio i	Max. torque [in-lbs]	OHL	Gearmotor		Gear Reducer	
					Output shaft [lbs]	Reducer	Motor	Reducer	NEMA C-input
56.0	1.8	7945	31.15	14161	3930	**CH082**	132S4	**PH082**	213/215TC
51.0	1.6	8766	34.38	14161	3997	**CH082**	132S4	**PH082**	213/215TC
45.0	1.4	9870	38.70	14161	4047	**CH082**	132S4	**PH082**	213/215TC
41.0	1.3	10902	42.75	14161	4047	**CH082**	132S4	**PH082**	213/215TC
36.0	1.2	12275	48.13	14161	4047	**CH082**	132S4	**PH082**	213/215TC
31.0	1.0	14115	56.53	14161	4047	**CH083**	132S4	**PH083**	213/215TC
281.0	3.5	1606	6.23	5664	1124	**CH101**	132S4	**PH101**	213/215TC
232.0	3.0	1944	7.55	5753	1124	**CH101**	132S4	**PH101**	213/215TC
208.0	2.7	2165	8.40	5753	1124	**CH101**	132S4	**PH101**	213/215TC
61.0	4.0	7326	28.73	29207	4946	**CH102**	132S4	**PH102**	213/215TC
57.0	3.6	7835	30.72	28322	4946	**CH102**	132S4	**PH102**	213/215TC
51.0	3.2	8722	34.20	28322	4946	**CH102**	132S4	**PH102**	213/215TC
46.0	2.5	9806	38.45	24782	4946	**CH102**	132S4	**PH102**	213/215TC
42.0	2.8	10532	41.30	29207	4946	**CH102**	132S4	**PH102**	213/215TC
38.0	2.5	11685	45.82	29207	4946	**CH102**	132S4	**PH102**	213/215TC
34.0	2.2	13138	51.52	29207	4946	**CH102**	132S4	**PH102**	213/215TC
32.0	2.2	13852	55.47	30978	4946	**CH103**	132S4	**PH103**	213/215TC
25.0	1.8	17402	69.69	30978	4946	**CH103**	132S4	**PH103**	213/215TC
22.0	1.6	19931	79.82	30978	4946	**CH103**	132S4	**PH103**	213/215TC
21.0	1.5	21015	84.16	30978	4946	**CH103**	132S4	**PH103**	213/215TC
19.0	1.3	23314	93.36	30978	4946	**CH103**	132S4	**PH103**	213/215TC
17.0	1.2	24988	100.07	30978	4946	**CH103**	132S4	**PH103**	213/215TC
14.0	1.0	30175	120.84	30978	4946	**CH103**	132S4	**PH103**	213/215TC
40.0	3.9	11247	44.10	44254	6744	**CH122**	132S4	**PH122**	213/215TC
38.0	3.9	11430	45.77	44254	6744	**CH123**	132S4	**PH123**	213/215TC
31.0	3.2	13951	55.87	44254	6744	**CH123**	132S4	**PH123**	213/215TC
26.0	2.6	16812	67.32	44254	6744	**CH123**	132S4	**PH123**	213/215TC
24.0	2.4	18407	73.71	44254	6744	**CH123**	132S4	**PH123**	213/215TC
21.0	2.1	20810	83.34	44254	6744	**CH123**	132S4	**PH123**	213/215TC
19.0	2.0	22466	89.97	44254	6744	**CH123**	132S4	**PH123**	213/215TC
17.0	1.8	25042	100.29	44254	6744	**CH123**	132S4	**PH123**	213/215TC
16.0	1.6	27054	108.34	44254	6744	**CH123**	132S4	**PH123**	213/215TC
15.0	1.5	29621	118.62	44254	6744	**CH123**	132S4	**PH123**	213/215TC
14.0	1.4	32007	128.18	44254	6744	**CH123**	132S4	**PH123**	213/215TC
12.0	1.2	36154	144.79	44254	6744	**CH123**	132S4	**PH123**	213/215TC
11.0	1.1	38760	155.22	44254	6744	**CH123**	132S4	**PH123**	213/215TC
10.0	1.0	43150	172.80	44254	6744	**CH123**	132S4	**PH123**	213/215TC
25.0	4.0	17817	71.35	70806	12364	**CH143**	132S4	**PH143**	213/215TC
22.0	3.6	19746	79.07	70806	12364	**CH143**	132S4	**PH143**	213/215TC
20.0	3.3	21583	86.43	70806	12364	**CH143**	132S4	**PH143**	213/215TC
18.0	2.9	24024	96.21	70806	12364	**CH143**	132S4	**PH143**	213/215TC

7.5 HP

Output speed [rpm]	Service factor sf	Output torque [in-lbs]	Exact ratio i	Max. torque [in-lbs]	OHL	Gearmotor		Gear Reducer	
					Output shaft [lbs]	Reducer	Motor	Reducer	NEMA C-input
17.0	2.7	26097	104.51	70806	12364	**CH143**	132S4	**PH143**	213/215TC
15.0	2.4	28946	115.92	70806	12364	**CH143**	132S4	**PH143**	213/215TC
14.0	2.2	32079	128.47	70806	12364	**CH143**	132S4	**PH143**	213/215TC
13.0	2.0	34848	139.55	70806	12364	**CH143**	132S4	**PH143**	213/215TC
11.0	1.8	38538	154.33	70806	12364	**CH143**	132S4	**PH143**	213/215TC
9.4	1.5	46435	185.96	70806	12364	**CH143**	132S4	**PH143**	213/215TC
8.5	1.4	51460	206.08	70806	12364	**CH143**	132S4	**PH143**	213/215TC

10 HP

Output speed [rpm]	Service factor sf	Output torque [in-lbs]	Exact ratio i	Max. torque [in-lbs]	OHL	Gearmotor		Gear Reducer	
					Output shaft [lbs]	Reducer	Motor	Reducer	NEMA C-input
326.0	2.4	1869	5.38	4425	1953	**CH062**	132MA4	**PH062**	213/215TC
295.0	2.4	2064	5.93	4868	1999	**CH062**	132MA4	**PH062**	213/215TC
237.0	1.9	2570	7.39	4868	2099	**CH062**	132MA4	**PH062**	213/215TC
206.0	1.8	2956	8.50	5310	2161	**CH062**	132MA4	**PH062**	213/215TC
186.0	1.6	3264	9.39	5310	2202	**CH062**	132MA4	**PH062**	213/215TC
150.0	1.4	4064	11.69	5753	2287	**CH062**	132MA4	**PH062**	213/215TC
138.0	1.4	4405	12.67	6196	2316	**CH062**	132MA4	**PH062**	213/215TC
119.0	1.2	5129	14.75	6196	2363	**CH062**	132MA4	**PH062**	213/215TC
107.0	1.3	5664	16.29	7081	2389	**CH062**	132MA4	**PH062**	213/215TC
99.0	1.2	6144	17.67	7346	2406	**CH062**	132MA4	**PH062**	213/215TC
86.0	1.1	7053	20.28	7523	2428	**CH062**	132MA4	**PH062**	213/215TC
1349.0	3.9	456	1.30	1770	605	**CH081**	132MA4	**PH081**	213/215TC
1225.0	3.9	502	1.43	1947	622	**CH081**	132MA4	**PH081**	213/215TC
906.0	3.0	679	1.93	2036	675	**CH081**	132MA4	**PH081**	213/215TC
689.0	2.8	893	2.54	2478	724	**CH081**	132MA4	**PH081**	213/215TC
538.0	2.4	1142	3.25	2744	768	**CH081**	132MA4	**PH081**	213/215TC
470.0	2.1	1308	3.72	2744	792	**CH081**	132MA4	**PH081**	213/215TC
438.0	2.0	1406	4.00	2832	805	**CH081**	132MA4	**PH081**	213/215TC
375.0	1.7	1640	4.67	2832	831	**CH081**	132MA4	**PH081**	213/215TC
316.0	1.5	1946	5.54	2921	858	**CH081**	132MA4	**PH081**	213/215TC
288.0	1.4	2138	6.08	3009	872	**CH081**	132MA4	**PH081**	213/215TC
233.0	1.2	2635	7.50	3098	899	**CH081**	132MA4	**PH081**	213/215TC
207.0	1.0	2967	8.44	3098	899	**CH081**	132MA4	**PH081**	213/215TC
325.0	3.3	1874	5.39	6196	2486	**CH082**	132MA4	**PH082**	213/215TC
294.0	3.0	2068	5.95	6196	2554	**CH082**	132MA4	**PH082**	213/215TC
237.0	2.8	2572	7.39	7081	2706	**CH082**	132MA4	**PH082**	213/215TC
218.0	2.5	2789	8.02	7081	2763	**CH082**	132MA4	**PH082**	213/215TC
198.0	2.6	3078	8.85	7966	2833	**CH082**	132MA4	**PH082**	213/215TC
159.0	2.5	3828	11.01	9736	2986	**CH082**	132MA4	**PH082**	213/215TC
130.0	2.6	4695	13.50	12391	3127	**CH082**	132MA4	**PH082**	213/215TC

10 HP

Output speed [rpm]	Service factor sf	Output torque [in-lbs]	Exact ratio i	Max. torque [in-lbs]	OHL	Gearmotor		Gear Reducer	
					Output shaft [lbs]	Reducer	Motor	Reducer	NEMA C-input
117.0	2.6	5180	14.90	13276	3193	**CH082**	132MA4	**PH082**	213/215TC
105.0	2.3	5778	16.62	13276	3264	**CH082**	132MA4	**PH082**	213/215TC
94.0	2.1	6442	18.53	13276	3333	**CH082**	132MA4	**PH082**	213/215TC
90.0	2.1	6741	19.38	14161	3360	**CH082**	132MA4	**PH082**	213/215TC
82.0	1.9	7438	21.39	14161	3417	**CH082**	132MA4	**PH082**	213/215TC
77.0	1.8	7929	22.80	14161	3452	**CH082**	132MA4	**PH082**	213/215TC
66.0	1.5	9250	26.60	14161	3530	**CH082**	132MA4	**PH082**	213/215TC
63.0	1.5	9696	27.88	14161	3551	**CH082**	132MA4	**PH082**	213/215TC
56.0	1.3	10834	31.15	14161	3595	**CH082**	132MA4	**PH082**	213/215TC
51.0	1.2	11954	34.38	14161	3626	**CH082**	132MA4	**PH082**	213/215TC
45.0	1.1	13460	38.70	14161	3654	**CH082**	132MA4	**PH082**	213/215TC
414.0	3.6	1484	4.22	5399	1095	**CH101**	132MA4	**PH101**	213/215TC
359.0	3.2	1713	4.88	5487	1124	**CH101**	132MA4	**PH101**	213/215TC
332.0	3.0	1851	5.27	5487	1124	**CH101**	132MA4	**PH101**	213/215TC
281.0	2.6	2189	6.23	5664	1124	**CH101**	132MA4	**PH101**	213/215TC
232.0	2.2	2651	7.55	5753	1124	**CH101**	132MA4	**PH101**	213/215TC
208.0	1.9	2952	8.40	5753	1124	**CH101**	132MA4	**PH101**	213/215TC
82.0	3.8	7457	21.44	28322	4946	**CH102**	132MA4	**PH102**	213/215TC
73.0	3.5	8335	23.97	29207	4946	**CH102**	132MA4	**PH102**	213/215TC
68.0	3.2	9005	25.89	29207	4946	**CH102**	132MA4	**PH102**	213/215TC
61.0	2.9	9990	28.73	29207	4946	**CH102**	132MA4	**PH102**	213/215TC
57.0	2.7	10683	30.72	28322	4946	**CH102**	132MA4	**PH102**	213/215TC
51.0	2.4	11893	34.20	28322	4946	**CH102**	132MA4	**PH102**	213/215TC
46.0	1.9	13372	38.45	24782	4946	**CH102**	132MA4	**PH102**	213/215TC
42.0	2.0	14362	41.30	29207	4946	**CH102**	132MA4	**PH102**	213/215TC
38.0	1.8	15934	45.82	29207	4946	**CH102**	132MA4	**PH102**	213/215TC
34.0	1.6	17915	51.52	29207	4946	**CH102**	132MA4	**PH102**	213/215TC
32.0	1.6	18889	55.47	30978	4946	**CH103**	132MA4	**PH103**	213/215TC
25.0	1.3	23730	69.69	30978	4946	**CH103**	132MA4	**PH103**	213/215TC
22.0	1.1	27178	79.82	30978	4946	**CH103**	132MA4	**PH103**	213/215TC
21.0	1.1	28657	84.16	30978	4946	**CH103**	132MA4	**PH103**	213/215TC
280.0	3.6	2196	6.25	7966	1349	**CH121**	132MA4	**PH121**	213/215TC
227.0	3.3	2706	7.70	8851	1349	**CH121**	132MA4	**PH121**	213/215TC
53.0	3.9	11476	33.00	44254	6744	**CH122**	132MA4	**PH122**	213/215TC
48.0	3.5	12565	36.13	44254	6744	**CH122**	132MA4	**PH122**	213/215TC
40.0	2.9	15336	44.10	44254	6744	**CH122**	132MA4	**PH122**	213/215TC
38.0	2.8	15586	45.77	44254	6744	**CH123**	132MA4	**PH123**	213/215TC
31.0	2.3	19024	55.87	44254	6744	**CH123**	132MA4	**PH123**	213/215TC
26.0	1.9	22925	67.32	44254	6744	**CH123**	132MA4	**PH123**	213/215TC
24.0	1.8	25100	73.71	44254	6744	**CH123**	132MA4	**PH123**	213/215TC
21.0	1.6	28377	83.34	44254	6744	**CH123**	132MA4	**PH123**	213/215TC

10 HP

Output speed [rpm]	Service factor sf	Output torque [in-lbs]	Exact ratio i	Max. torque [in-lbs]	OHL	Gearmotor		Gear Reducer	
					Output shaft [lbs]	Reducer	Motor	Reducer	NEMA C-input
19.0	1.4	30636	89.97	44254	6744	**CH123**	132MA4	**PH123**	213/215TC
17.0	1.3	34149	100.29	44254	6744	**CH123**	132MA4	**PH123**	213/215TC
16.0	1.2	36892	108.34	44254	6744	**CH123**	132MA4	**PH123**	213/215TC
15.0	1.1	40392	118.62	44254	6744	**CH123**	132MA4	**PH123**	213/215TC
14.0	1.0	43646	128.18	44254	6744	**CH123**	132MA4	**PH123**	213/215TC
33.0	3.9	18227	53.53	70806	12364	**CH143**	132MA4	**PH143**	213/215TC
30.0	3.5	20164	59.22	70806	12364	**CH143**	132MA4	**PH143**	213/215TC
28.0	3.3	21450	62.99	70806	12364	**CH143**	132MA4	**PH143**	213/215TC
25.0	2.9	24296	71.35	70806	12364	**CH143**	132MA4	**PH143**	213/215TC
22.0	2.6	26926	79.07	70806	12364	**CH143**	132MA4	**PH143**	213/215TC
20.0	2.4	29431	86.43	70806	12364	**CH143**	132MA4	**PH143**	213/215TC
18.0	2.2	32759	96.21	70806	12364	**CH143**	132MA4	**PH143**	213/215TC
17.0	2.0	35587	104.51	70806	12364	**CH143**	132MA4	**PH143**	213/215TC
15.0	1.8	39472	115.92	70806	12364	**CH143**	132MA4	**PH143**	213/215TC
14.0	1.6	43744	128.47	70806	12364	**CH143**	132MA4	**PH143**	213/215TC
13.0	1.5	47520	139.55	70806	12364	**CH143**	132MA4	**PH143**	213/215TC
11.0	1.3	52551	154.33	70806	12364	**CH143**	132MA4	**PH143**	213/215TC
9.4	1.1	63320	185.96	70806	12364	**CH143**	132MA4	**PH143**	213/215TC
8.5	1.0	70173	206.08	70806	12364	**CH143**	132MA4	**PH143**	213/215TC

15 HP

Output speed [rpm]	Service factor sf	Output torque [in-lbs]	Exact ratio i	Max. torque [in-lbs]	OHL	Gearmotor		Gear Reducer	
					Output shaft [lbs]	Reducer	Motor	Reducer	NEMA C-input
326.0	1.6	2741	5.38	4425	1824	**CH062**	132MC4	-	-
295.0	1.6	3027	5.93	4868	1857	**CH062**	132MC4	-	-
237.0	1.3	3770	7.39	4868	1922	**CH062**	132MC4	-	-
206.0	1.2	4335	8.50	5310	1956	**CH062**	132MC4	-	-
186.0	1.1	4787	9.39	5310	1977	**CH062**	132MC4	-	-
1349.0	2.6	669	1.30	1770	583	**CH081**	132MC4	-	-
1225.0	2.6	736	1.43	1947	598	**CH081**	132MC4	-	-
906.0	2.0	995	1.93	2036	642	**CH081**	132MC4	-	-
689.0	1.9	1310	2.54	2478	681	**CH081**	132MC4	-	-
538.0	1.6	1675	3.25	2744	714	**CH081**	132MC4	-	-
470.0	1.4	1918	3.72	2744	729	**CH081**	132MC4	-	-
438.0	1.4	2061	4.00	2832	737	**CH081**	132MC4	-	-
375.0	1.2	2405	4.67	2832	752	**CH081**	132MC4	-	-
316.0	1.0	2854	5.54	2921	765	**CH081**	132MC4	-	-
325.0	2.3	2749	5.39	6196	2385	**CH082**	132MC4	**PH082**	254/256TC
294.0	2.0	3033	5.95	6196	2442	**CH082**	132MC4	**PH082**	254/256TC
237.0	1.9	3772	7.39	7081	2567	**CH082**	132MC4	**PH082**	254/256TC
218.0	1.7	4091	8.02	7081	2612	**CH082**	132MC4	**PH082**	254/256TC

15 HP

Output speed [rpm]	Service factor sf	Output torque [in-lbs]	Exact ratio i	Max. torque [in-lbs]	OHL	Gearmotor		Gear Reducer	
					Output shaft [lbs]	Reducer	Motor	Reducer	NEMA C-input
198.0	1.8	4514	8.85	7966	2666	**CH082**	132MC4	**PH082**	254/256TC
159.0	1.7	5614	11.01	9736	2779	**CH082**	132MC4	**PH082**	254/256TC
130.0	1.8	6886	13.50	12391	2873	**CH082**	132MC4	**PH082**	254/256TC
117.0	1.7	7598	14.90	13276	2912	**CH082**	132MC4	**PH082**	254/256TC
105.0	1.6	8475	16.62	13276	2951	**CH082**	132MC4	**PH082**	254/256TC
94.0	1.4	9449	18.53	13276	2983	**CH082**	132MC4	**PH082**	254/256TC
90.0	1.4	9887	19.38	14161	2995	**CH082**	132MC4	**PH082**	254/256TC
82.0	1.3	10909	21.39	14161	3014	**CH082**	132MC4	**PH082**	254/256TC
77.0	1.2	11629	22.80	14161	3023	**CH082**	132MC4	**PH082**	254/256TC
66.0	1.0	13567	26.60	14161	3028	**CH082**	132MC4	**PH082**	254/256TC
861.0	3.8	1047	2.03	3983	866	**CH101**	132MC4	**PH101**	254/256TC
705.0	3.8	1279	2.48	4868	915	**CH101**	132MC4	**PH101**	254/256TC
535.0	3.1	1687	3.27	5310	985	**CH101**	132MC4	**PH101**	254/256TC
473.0	2.8	1907	3.70	5310	1016	**CH101**	132MC4	**PH101**	254/256TC
414.0	2.5	2176	4.22	5399	1050	**CH101**	132MC4	**PH101**	254/256TC
359.0	2.2	2512	4.88	5487	1087	**CH101**	132MC4	**PH101**	254/256TC
332.0	2.0	2714	5.27	5487	1106	**CH101**	132MC4	**PH101**	254/256TC
281.0	1.8	3211	6.23	5664	1124	**CH101**	132MC4	**PH101**	254/256TC
232.0	1.5	3889	7.55	5753	1124	**CH101**	132MC4	**PH101**	254/256TC
208.0	1.3	4329	8.40	5753	1124	**CH101**	132MC4	**PH101**	254/256TC
109.0	3.5	8207	16.09	28322	4420	**CH102**	132MC4	**PH102**	254/256TC
98.0	3.1	9105	17.85	28322	4517	**CH102**	132MC4	**PH102**	254/256TC
88.0	2.8	10123	19.85	28322	4613	**CH102**	132MC4	**PH102**	254/256TC
82.0	2.6	10937	21.44	28322	4681	**CH102**	132MC4	**PH102**	254/256TC
73.0	2.4	12225	23.97	29207	4773	**CH102**	132MC4	**PH102**	254/256TC
68.0	2.2	13207	25.89	29207	4834	**CH102**	132MC4	**PH102**	254/256TC
61.0	2.0	14652	28.73	29207	4910	**CH102**	132MC4	**PH102**	254/256TC
57.0	1.8	15669	30.72	28322	4946	**CH102**	132MC4	**PH102**	254/256TC
51.0	1.6	17444	34.20	28322	4946	**CH102**	132MC4	**PH102**	254/256TC
46.0	1.3	19612	38.45	24782	4946	**CH102**	132MC4	**PH102**	254/256TC
42.0	1.4	21065	41.30	29207	4946	**CH102**	132MC4	**PH102**	254/256TC
38.0	1.2	23369	45.82	29207	4946	**CH102**	132MC4	**PH102**	254/256TC
34.0	1.1	26275	51.52	29207	4946	**CH102**	132MC4	**PH102**	254/256TC
32.0	1.1	27704	55.47	30978	4946	**CH103**	132MC4	**PH103**	254/256TC
425.0	3.5	2122	4.12	7523	1349	**CH121**	132MC4	**PH121**	254/256TC
365.0	3.1	2474	4.80	7700	1349	**CH121**	132MC4	**PH121**	254/256TC
336.0	2.9	2687	5.21	7789	1349	**CH121**	132MC4	**PH121**	254/256TC
280.0	2.5	3221	6.25	7966	1349	**CH121**	132MC4	**PH121**	254/256TC
227.0	2.2	3968	7.70	8851	1349	**CH121**	132MC4	**PH121**	254/256TC
78.0	3.9	11488	22.52	44254	6744	**CH122**	132MC4	**PH122**	254/256TC
72.0	3.5	12479	24.47	44254	6744	**CH122**	132MC4	**PH122**	254/256TC

15 HP

Output speed [rpm]	Service factor sf	Output torque [in-lbs]	Exact ratio i	Max. torque [in-lbs]	OHL	Gearmotor		Gear Reducer	
					Output shaft [lbs]	Reducer	Motor	Reducer	NEMA C-input
64.0	3.2	14022	27.49	44254	6744	**CH122**	132MC4	**PH122**	254/256TC
59.0	2.9	15232	29.86	44254	6744	**CH122**	132MC4	**PH122**	254/256TC
53.0	2.6	16832	33.00	44254	6744	**CH122**	132MC4	**PH122**	254/256TC
48.0	2.4	18428	36.13	44254	6744	**CH122**	132MC4	**PH122**	254/256TC
40.0	2.0	22493	44.10	44254	6744	**CH122**	132MC4	**PH122**	254/256TC
38.0	1.9	22860	45.77	44254	6744	**CH123**	132MC4	**PH123**	254/256TC
31.0	1.6	27902	55.87	44254	6744	**CH123**	132MC4	**PH123**	254/256TC
26.0	1.3	33623	67.32	44254	6744	**CH123**	132MC4	**PH123**	254/256TC
24.0	1.2	36813	73.71	44254	6744	**CH123**	132MC4	**PH123**	254/256TC
21.0	1.1	41619	83.34	44254	6744	**CH123**	132MC4	**PH123**	254/256TC
45.0	3.6	19815	38.85	70806	11826	**-**	-	**PH142**	254/256TC
41.0	3.2	21960	43.05	70806	12128	**-**	-	**PH142**	254/256TC
36.0	2.9	24146	48.35	70806	12364	**-**	-	**PH143**	254/256TC
33.0	2.6	26733	53.53	70806	12364	**CH143**	132MC4	**PH143**	254/256TC
30.0	2.4	29574	59.22	70806	12364	**CH143**	132MC4	**PH143**	254/256TC
28.0	2.3	31459	62.99	70806	12364	**CH143**	132MC4	**PH143**	254/256TC
25.0	2.0	35635	71.35	70806	12364	**CH143**	132MC4	**PH143**	254/256TC
22.0	1.8	39491	79.07	70806	12364	**CH143**	132MC4	**PH143**	254/256TC
20.0	1.6	43166	86.43	70806	12364	**CH143**	132MC4	**PH143**	254/256TC
18.0	1.5	48047	96.21	70806	12364	**CH143**	132MC4	**PH143**	254/256TC
17.0	1.4	52194	104.51	70806	12364	**CH143**	132MC4	**PH143**	254/256TC
15.0	1.2	57893	115.92	70806	12364	**CH143**	132MC4	**PH143**	254/256TC
14.0	1.1	64158	128.47	70806	12364	**CH143**	132MC4	**PH143**	254/256TC
13.0	1.0	69696	139.55	70806	12364	**CH143**	132MC4	**PH143**	254/256TC

20 HP

Output speed [rpm]	Service factor sf	Output torque [in-lbs]	Exact ratio i	Max. torque [in-lbs]	OHL	Gearmotor		Gear Reducer	
					Output shaft [lbs]	Reducer	Motor	Reducer	NEMA C-input
325.0	1.7	3748	5.39	6196	2269	**-**	-	**PH082**	254/256TC
294.0	1.5	4136	5.95	6196	2314	**-**	-	**PH082**	254/256TC
237.0	1.4	5143	7.39	7081	2407	**-**	-	**PH082**	254/256TC
218.0	1.3	5579	8.02	7081	2439	**-**	-	**PH082**	254/256TC
198.0	1.3	6156	8.85	7966	2475	**-**	-	**PH082**	254/256TC
159.0	1.3	7655	11.01	9736	2542	**-**	-	**PH082**	254/256TC
130.0	1.3	9389	13.50	12391	2582	**-**	-	**PH082**	254/256TC
117.0	1.3	10360	14.90	13276	2591	**-**	-	**PH082**	254/256TC
105.0	1.1	11556	16.62	13276	2593	**-**	-	**PH082**	254/256TC
94.0	1.0	12884	18.53	13276	2584	**-**	-	**PH082**	254/256TC
90.0	1.1	13482	19.38	14161	2577	**-**	-	**PH082**	254/256TC
1354.0	3.9	908	1.29	3540	744	**-**	-	**PH101**	254/256TC
861.0	2.8	1428	2.03	3983	841	**-**	-	**PH101**	254/256TC

20 HP

Output speed [rpm]	Service factor sf	Output torque [in-lbs]	Exact ratio i	Max. torque [in-lbs]	OHL	Gearmotor		Gear Reducer	
					Output shaft [lbs]	Reducer	Motor	Reducer	NEMA C-input
705.0	2.8	1744	2.48	4868	885	-	-	**PH101**	254/256TC
535.0	2.3	2300	3.27	5310	945	-	-	**PH101**	254/256TC
473.0	2.0	2600	3.70	5310	971	-	-	**PH101**	254/256TC
414.0	1.8	2967	4.22	5399	999	-	-	**PH101**	254/256TC
359.0	1.6	3426	4.88	5487	1028	-	-	**PH101**	254/256TC
332.0	1.5	3701	5.27	5487	1042	-	-	**PH101**	254/256TC
281.0	1.3	4379	6.23	5664	1072	-	-	**PH101**	254/256TC
232.0	1.1	5303	7.55	5753	1102	-	-	**PH101**	254/256TC
212.0	3.8	5755	8.27	22127	3620	-	-	**PH102**	254/256TC
175.0	3.6	6950	9.99	24782	3776	-	-	**PH102**	254/256TC
158.0	3.4	7710	11.09	26552	3859	-	-	**PH102**	254/256TC
131.0	3.0	9268	13.32	27437	4001	-	-	**PH102**	254/256TC
109.0	2.5	11191	16.09	28322	4133	-	-	**PH102**	254/256TC
98.0	2.3	12416	17.85	28322	4198	-	-	**PH102**	254/256TC
88.0	2.1	13805	19.85	28322	4259	-	-	**PH102**	254/256TC
82.0	1.9	14914	21.44	28322	4298	-	-	**PH102**	254/256TC
73.0	1.8	16671	23.97	29207	4345	-	-	**PH102**	254/256TC
68.0	1.6	18010	25.89	29207	4372	-	-	**PH102**	254/256TC
61.0	1.5	19980	28.73	29207	4397	-	-	**PH102**	254/256TC
57.0	1.3	21367	30.72	28322	4406	-	-	**PH102**	254/256TC
51.0	1.2	23787	34.20	28322	4409	-	-	**PH102**	254/256TC
42.0	1.0	28725	41.30	29207	4368	-	-	**PH102**	254/256TC
592.0	3.4	2076	2.95	7081	1233	-	-	**PH121**	254/256TC
557.0	3.3	2209	3.14	7258	1254	-	-	**PH121**	254/256TC
489.0	3.0	2515	3.58	7523	1297	-	-	**PH121**	254/256TC
425.0	2.6	2894	4.12	7523	1344	-	-	**PH121**	254/256TC
365.0	2.3	3373	4.80	7700	1349	-	-	**PH121**	254/256TC
336.0	2.1	3664	5.21	7789	1349	-	-	**PH121**	254/256TC
280.0	1.8	4392	6.25	7966	1349	-	-	**PH121**	254/256TC
227.0	1.6	5411	7.70	8851	1349	-	-	**PH121**	254/256TC
103.0	3.6	11769	16.92	42484	6648	-	-	**PH122**	254/256TC
91.0	3.3	13438	19.32	44254	6744	-	-	**PH122**	254/256TC
85.0	3.1	14308	20.57	44254	6744	-	-	**PH122**	254/256TC
78.0	2.8	15665	22.52	44254	6744	-	-	**PH122**	254/256TC
72.0	2.6	17017	24.47	44254	6744	-	-	**PH122**	254/256TC
64.0	2.3	19120	27.49	44254	6744	-	-	**PH122**	254/256TC
59.0	2.1	20771	29.86	44254	6744	-	-	**PH122**	254/256TC
53.0	1.9	22952	33.00	44254	6744	-	-	**PH122**	254/256TC
48.0	1.8	25130	36.13	44254	6744	-	-	**PH122**	254/256TC
40.0	1.4	30672	44.10	44254	6744	-	-	**PH122**	254/256TC
38.0	1.4	31172	45.77	44254	6744	-	-	**PH123**	254/256TC

20 HP

Output speed [rpm]	Service factor sf	Output torque [in-lbs]	Exact ratio i	Max. torque [in-lbs]	OHL	Gearmotor		Gear Reducer	
					Output shaft [lbs]	Reducer	Motor	Reducer	NEMA C-input
31.0	1.2	38048	55.87	44254	6744	-	-	**PH123**	254/256TC
65.0	3.8	18615	26.76	70806	10360	-	-	**PH142**	254/256TC
54.0	3.2	22425	32.24	70806	10825	-	-	**PH142**	254/256TC
45.0	2.6	27021	38.85	70806	11279	-	-	**PH142**	254/256TC
41.0	2.4	29945	43.05	70806	11521	-	-	**PH142**	254/256TC
36.0	2.2	32926	48.35	70806	11838	-	-	**PH143**	254/256TC
33.0	1.9	36454	53.53	70806	12065	-	-	**PH143**	254/256TC
30.0	1.8	40329	59.22	70806	12279	-	-	**PH143**	254/256TC
28.0	1.7	42899	62.99	70806	12364	-	-	**PH143**	254/256TC
25.0	1.5	48593	71.35	70806	12364	-	-	**PH143**	254/256TC
22.0	1.3	53852	79.07	70806	12364	-	-	**PH143**	254/256TC
20.0	1.2	58862	86.43	70806	12364	-	-	**PH143**	254/256TC
18.0	1.1	65519	96.21	70806	12364	-	-	**PH143**	254/256TC

25 HP

Output speed [rpm]	Service factor sf	Output torque [in-lbs]	Exact ratio i	Max. torque [in-lbs]	OHL	Gearmotor		Gear Reducer	
					Output shaft [lbs]	Reducer	Motor	Reducer	NEMA C-input
333.0	3.5	4515	5.26	15931	3155	-	-	**PH102**	284/286TC
275.0	3.2	5452	6.36	17701	3298	-	-	**PH102**	284/286TC
248.0	3.4	6048	7.05	20357	3375	-	-	**PH102**	284/286TC
212.0	3.1	7098	8.27	22127	3491	-	-	**PH102**	284/286TC
175.0	2.9	8571	9.99	24782	3620	-	-	**PH102**	284/286TC
158.0	2.8	9509	11.09	26552	3686	-	-	**PH102**	284/286TC
131.0	2.4	11430	13.32	27437	3792	-	-	**PH102**	284/286TC
109.0	2.1	13803	16.09	28322	3881	-	-	**PH102**	284/286TC
98.0	1.8	15313	17.85	28322	3919	-	-	**PH102**	284/286TC
88.0	1.7	17026	19.85	28322	3949	-	-	**PH102**	284/286TC
82.0	1.5	18394	21.44	28322	3963	-	-	**PH102**	284/286TC
73.0	1.4	20560	23.97	29207	3971	-	-	**PH102**	284/286TC
68.0	1.3	22212	25.89	29207	3967	-	-	**PH102**	284/286TC
61.0	1.2	24642	28.73	29207	3948	-	-	**PH102**	284/286TC
57.0	1.1	26352	30.72	28322	3926	-	-	**PH102**	284/286TC
969.0	4.0	1566	1.81	6196	1058	-	-	**PH121**	284/286TC
875.0	3.8	1733	2.00	6638	1088	-	-	**PH121**	284/286TC
706.0	3.3	2150	2.48	7081	1152	-	-	**PH121**	284/286TC
592.0	2.8	2561	2.95	7081	1205	-	-	**PH121**	284/286TC
557.0	2.7	2724	3.14	7258	1224	-	-	**PH121**	284/286TC
489.0	2.4	3102	3.58	7523	1263	-	-	**PH121**	284/286TC
425.0	2.1	3569	4.12	7523	1305	-	-	**PH121**	284/286TC
365.0	1.9	4160	4.80	7700	1349	-	-	**PH121**	284/286TC
336.0	1.7	4519	5.21	7789	1349	-	-	**PH121**	284/286TC

25 HP

Output speed [rpm]	Service factor sf	Output torque [in-lbs]	Exact ratio i	Max. torque [in-lbs]	OHL	Gearmotor		Gear Reducer	
					Output shaft [lbs]	Reducer	Motor	Reducer	NEMA C-input
280.0	1.5	5417	6.25	7966	1349	-	-	**PH121**	284/286TC
227.0	1.3	6674	7.70	8851	1349	-	-	**PH121**	284/286TC
169.0	4.0	8875	10.35	35403	5734	-	-	**PH122**	284/286TC
138.0	3.6	10862	12.66	38943	6021	-	-	**PH122**	284/286TC
126.0	3.4	11892	13.86	40713	6149	-	-	**PH122**	284/286TC
103.0	2.9	14515	16.92	42484	6424	-	-	**PH122**	284/286TC
91.0	2.7	16574	19.32	44254	6599	-	-	**PH122**	284/286TC
85.0	2.5	17646	20.57	44254	6680	-	-	**PH122**	284/286TC
78.0	2.3	19320	22.52	44254	6744	-	-	**PH122**	284/286TC
72.0	2.1	20988	24.47	44254	6744	-	-	**PH122**	284/286TC
64.0	1.9	23582	27.49	44254	6744	-	-	**PH122**	284/286TC
59.0	1.7	25617	29.86	44254	6744	-	-	**PH122**	284/286TC
53.0	1.6	28308	33.00	44254	6744	-	-	**PH122**	284/286TC
48.0	1.4	30993	36.13	44254	6744	-	-	**PH122**	284/286TC
40.0	1.2	37829	44.10	44254	6744	-	-	**PH122**	284/286TC
38.0	1.2	38446	45.77	44254	6744	-	-	**PH123**	284/286TC
72.0	3.4	20716	24.15	70806	9804	-	-	**PH142**	284/286TC
65.0	3.1	22958	26.76	70806	10030	-	-	**PH142**	284/286TC
54.0	2.6	27658	32.24	70806	10427	-	-	**PH142**	284/286TC
45.0	2.1	33326	38.85	70806	10800	-	-	**PH142**	284/286TC
41.0	1.9	36932	43.05	70806	10990	-	-	**PH142**	284/286TC
36.0	1.7	40608	48.35	70806	11255	-	-	**PH143**	284/286TC
33.0	1.6	44959	53.53	70806	11419	-	-	**PH143**	284/286TC
30.0	1.4	49739	59.22	70806	11564	-	-	**PH143**	284/286TC
28.0	1.3	52909	62.99	70806	11642	-	-	**PH143**	284/286TC
25.0	1.2	59931	71.35	70806	11773	-	-	**PH143**	284/286TC
22.0	1.1	66417	79.07	70806	11849	-	-	**PH143**	284/286TC

30 HP

Output speed [rpm]	Service factor sf	Output torque [in-lbs]	Exact ratio i	Max. torque [in-lbs]	OHL	Gearmotor		Gear Reducer	
					Output shaft [lbs]	Reducer	Motor	Reducer	NEMA C-input
333.0	3.0	5369	5.26	15931	3073	-	-	**PH102**	284/286TC
275.0	2.7	6483	6.36	17701	3199	-	-	**PH102**	284/286TC
248.0	2.8	7193	7.05	20357	3265	-	-	**PH102**	284/286TC
212.0	2.6	8440	8.27	22127	3362	-	-	**PH102**	284/286TC
175.0	2.4	10193	9.99	24782	3464	-	-	**PH102**	284/286TC
158.0	2.3	11308	11.09	26552	3513	-	-	**PH102**	284/286TC
131.0	2.0	13592	13.32	27437	3584	-	-	**PH102**	284/286TC
109.0	1.7	16414	16.09	28322	3630	-	-	**PH102**	284/286TC
98.0	1.6	18210	17.85	28322	3640	-	-	**PH102**	284/286TC
88.0	1.4	20247	19.85	28322	3638	-	-	**PH102**	284/286TC

30 HP

Output speed [rpm]	Service factor sf	Output torque [in-lbs]	Exact ratio i	Max. torque [in-lbs]	OHL	Gearmotor		Gear Reducer	
					Output shaft [lbs]	Reducer	Motor	Reducer	NEMA C-input
82.0	1.3	21874	21.44	28322	3628	-	-	**PH102**	284/286TC
73.0	1.2	24450	23.97	29207	3596	-	-	**PH102**	284/286TC
68.0	1.1	26415	25.89	29207	3562	-	-	**PH102**	284/286TC
969.0	3.3	1862	1.81	6196	1041	-	-	**PH121**	284/286TC
875.0	3.2	2061	2.00	6638	1069	-	-	**PH121**	284/286TC
706.0	2.8	2556	2.48	7081	1129	-	-	**PH121**	284/286TC
592.0	2.3	3045	2.95	7081	1177	-	-	**PH121**	284/286TC
557.0	2.2	3239	3.14	7258	1194	-	-	**PH121**	284/286TC
489.0	2.0	3689	3.58	7523	1229	-	-	**PH121**	284/286TC
425.0	1.8	4244	4.12	7523	1266	-	-	**PH121**	284/286TC
365.0	1.6	4947	4.80	7700	1304	-	-	**PH121**	284/286TC
336.0	1.4	5374	5.21	7789	1324	-	-	**PH121**	284/286TC
280.0	1.2	6442	6.25	7966	1349	-	-	**PH121**	284/286TC
227.0	1.1	7937	7.70	8851	1349	-	-	**PH121**	284/286TC
206.0	3.9	8647	8.48	33633	5337	-	-	**PH122**	284/286TC
169.0	3.4	10554	10.35	35403	5597	-	-	**PH122**	284/286TC
138.0	3.0	12917	12.66	38943	5853	-	-	**PH122**	284/286TC
126.0	2.9	14142	13.86	40713	5965	-	-	**PH122**	284/286TC
103.0	2.5	17261	16.92	42484	6199	-	-	**PH122**	284/286TC
91.0	2.2	19709	19.32	44254	6343	-	-	**PH122**	284/286TC
85.0	2.1	20985	20.57	44254	6407	-	-	**PH122**	284/286TC
78.0	1.9	22976	22.52	44254	6493	-	-	**PH122**	284/286TC
72.0	1.8	24959	24.47	44254	6565	-	-	**PH122**	284/286TC
64.0	1.6	28043	27.49	44254	6653	-	-	**PH122**	284/286TC
59.0	1.5	30464	29.86	44254	6706	-	-	**PH122**	284/286TC
53.0	1.3	33663	33.00	44254	6744	-	-	**PH122**	284/286TC
48.0	1.2	36857	36.13	44254	6744	-	-	**PH122**	284/286TC
100.0	3.9	17805	17.45	69921	8858	-	-	**PH142**	284/286TC
87.0	3.5	20446	20.04	70806	9139	-	-	**PH142**	284/286TC
72.0	2.9	24635	24.15	70806	9506	-	-	**PH142**	284/286TC
65.0	2.6	27301	26.76	70806	9700	-	-	**PH142**	284/286TC
54.0	2.2	32891	32.24	70806	10030	-	-	**PH142**	284/286TC
45.0	1.8	39631	38.85	70806	10321	-	-	**PH142**	284/286TC
41.0	1.6	43920	43.05	70806	10459	-	-	**PH142**	284/286TC
36.0	1.5	48291	48.35	70806	10671	-	-	**PH143**	284/286TC
33.0	1.3	53465	53.53	70806	10773	-	-	**PH143**	284/286TC
30.0	1.2	59149	59.22	70806	10849	-	-	**PH143**	284/286TC
28.0	1.1	62919	62.99	70806	10882	-	-	**PH143**	284/286TC

5.1 H/HA GEARED MOTORS

40 HP

Output speed [rpm]	Service factor sf	Output torque [in-lbs]	Exact ratio i	Max. torque [in-lbs]	OHL	Gearmotor		Gear Reducer	
					Output shaft [lbs]	Reducer	Motor	Reducer	NEMA C-input
332.0	3.6	7337	5.27	26552	4560	-	-	**PH122**	324/326TC
303.0	3.5	8033	5.78	28322	4662	-	-	**PH122**	324/326TC
248.0	3.2	9805	7.05	31863	4882	-	-	**PH122**	324/326TC
226.0	3.0	10769	7.74	32748	4984	-	-	**PH122**	324/326TC
206.0	2.9	11791	8.48	33633	5080	-	-	**PH122**	324/326TC
169.0	2.5	14392	10.35	35403	5283	-	-	**PH122**	324/326TC
138.0	2.2	17614	12.66	38943	5469	-	-	**PH122**	324/326TC
126.0	2.1	19285	13.86	40713	5544	-	-	**PH122**	324/326TC
103.0	1.8	23538	16.92	42484	5686	-	-	**PH122**	324/326TC
91.0	1.6	26877	19.32	44254	5757	-	-	**PH122**	324/326TC
85.0	1.5	28616	20.57	44254	5782	-	-	**PH122**	324/326TC
78.0	1.4	31330	22.52	44254	5809	-	-	**PH122**	324/326TC
64.0	1.2	38241	27.49	44254	5819	-	-	**PH122**	324/326TC
134.0	3.6	18183	13.07	64610	7891	-	-	**PH142**	324/326TC
111.0	3.2	21909	15.75	69036	8202	-	-	**PH142**	324/326TC
100.0	2.9	24280	17.45	69921	8366	-	-	**PH142**	324/326TC
87.0	2.5	27880	20.04	70806	8574	-	-	**PH142**	324/326TC
72.0	2.1	33593	24.15	70806	8826	-	-	**PH142**	324/326TC
65.0	1.9	37229	26.76	70806	8946	-	-	**PH142**	324/326TC
54.0	1.6	44851	32.24	70806	9121	-	-	**PH142**	324/326TC
45.0	1.3	54042	38.85	70806	9226	-	-	**PH142**	324/326TC
41.0	1.2	59890	43.05	70806	9246	-	-	**PH142**	324/326TC
36.0	1.1	65852	48.35	70806	9336	-	-	**PH143**	324/326TC

50 HP

Output speed [rpm]	Service factor sf	Output torque [in-lbs]	Exact ratio i	Max. torque [in-lbs]	OHL	Gearmotor		Gear Reducer	
					Output shaft [lbs]	Reducer	Motor	Reducer	NEMA C-input
332.0	2.9	9049	5.27	26552	4420	-	-	**PH122**	324/326TC
303.0	2.9	9908	5.78	28322	4508	-	-	**PH122**	324/326TC
248.0	2.6	12093	7.05	31863	4695	-	-	**PH122**	324/326TC
226.0	2.5	13282	7.74	32748	4778	-	-	**PH122**	324/326TC
206.0	2.3	14542	8.48	33633	4855	-	-	**PH122**	324/326TC
169.0	2.0	17750	10.35	35403	5008	-	-	**PH122**	324/326TC
138.0	1.8	21724	12.66	38943	5133	-	-	**PH122**	324/326TC
126.0	1.7	23785	13.86	40713	5176	-	-	**PH122**	324/326TC
103.0	1.5	29031	16.92	42484	5236	-	-	**PH122**	324/326TC
91.0	1.3	33148	19.32	44254	5243	-	-	**PH122**	324/326TC
85.0	1.3	35293	20.57	44254	5236	-	-	**PH122**	324/326TC
78.0	1.1	38641	22.52	44254	5211	-	-	**PH122**	324/326TC
275.0	4.0	10903	6.36	43369	6463	-	-	**PH142**	324/326TC
248.0	3.7	12083	7.04	44254	6627	-	-	**PH142**	324/326TC

5.1 H/HA GEARED MOTORS

50 HP

Output speed [rpm]	Service factor sf	Output torque [in-lbs]	Exact ratio i	Max. torque [in-lbs]	OHL	Gearmotor		Gear Reducer	
					Output shaft [lbs]	Reducer	Motor	Reducer	NEMA C-input
223.0	3.5	13455	7.84	46909	6799	-	-	**PH142**	324/326TC
185.0	3.5	16212	9.45	57530	7090	-	-	**PH142**	324/326TC
167.0	3.5	17967	10.47	63725	7247	-	-	**PH142**	324/326TC
134.0	2.9	22425	13.07	64610	7569	-	-	**PH142**	324/326TC
111.0	2.6	27021	15.75	69036	7814	-	-	**PH142**	324/326TC
100.0	2.3	29945	17.45	69921	7936	-	-	**PH142**	324/326TC
87.0	2.1	34386	20.04	70806	8080	-	-	**PH142**	324/326TC
72.0	1.7	41432	24.15	70806	8230	-	-	**PH142**	324/326TC
65.0	1.5	45916	26.76	70806	8286	-	-	**PH142**	324/326TC
54.0	1.3	55316	32.24	70806	8326	-	-	**PH142**	324/326TC
45.0	1.1	66651	38.85	70806	8267	-	-	**PH142**	324/326TC

60 HP

Output speed [rpm]	Service factor sf	Output torque [in-lbs]	Exact ratio i	Max. torque [in-lbs]	OHL	Gearmotor		Gear Reducer	
					Output shaft [lbs]	Reducer	Motor	Reducer	NEMA C-input
332.0	3.7	11005	5.27	40713	6016	-	-	**PH142**	364/365TC
275.0	3.3	13261	6.36	43369	6284	-	-	**PH142**	364/365TC
248.0	3.0	14696	7.04	44254	6429	-	-	**PH142**	364/365TC
223.0	2.9	16365	7.84	46909	6577	-	-	**PH142**	364/365TC
185.0	2.9	19718	9.45	57530	6824	-	-	**PH142**	364/365TC
167.0	2.9	21852	10.47	63725	6952	-	-	**PH142**	364/365TC
134.0	2.4	27274	13.07	64610	7200	-	-	**PH142**	364/365TC
111.0	2.1	32863	15.75	69036	7370	-	-	**PH142**	364/365TC
100.0	1.9	36420	17.45	69921	7444	-	-	**PH142**	364/365TC
87.0	1.7	41820	20.04	70806	7515	-	-	**PH142**	364/365TC
72.0	1.4	50390	24.15	70806	7549	-	-	**PH142**	364/365TC
65.0	1.3	55844	26.76	70806	7531	-	-	**PH142**	364/365TC
54.0	1.1	67276	32.24	70806	7417	-	-	**PH142**	364/365TC

75 HP

Output speed [rpm]	Service factor sf	Output torque [in-lbs]	Exact ratio i	Max. torque [in-lbs]	OHL	Gearmotor		Gear Reducer	
					Output shaft [lbs]	Reducer	Motor	Reducer	NEMA C-input
332.0	3.0	13451	5.27	40713	5830	-	-	**PH142**	364/365TC
275.0	2.7	16207	6.36	43369	6060	-	-	**PH142**	364/365TC
248.0	2.5	17961	7.04	44254	6181	-	-	**PH142**	364/365TC
223.0	2.3	20001	7.84	46909	6301	-	-	**PH142**	364/365TC
185.0	2.4	24100	9.45	57530	6491	-	-	**PH142**	364/365TC
167.0	2.4	26708	10.47	63725	6583	-	-	**PH142**	364/365TC
134.0	1.9	33335	13.07	64610	6740	-	-	**PH142**	364/365TC
111.0	1.7	40166	15.75	69036	6815	-	-	**PH142**	364/365TC

75 HP

Output speed [rpm]	Service factor sf	Output torque [in-lbs]	Exact ratio i	Max. torque [in-lbs]	OHL	Gearmotor		Gear Reducer	
					Output shaft [lbs]	Reducer	Motor	Reducer	NEMA C-input
100.0	1.6	44513	17.45	69921	6829	-	-	**PH142**	364/365TC
87.0	1.4	51114	20.04	70806	6809	-	-	**PH142**	364/365TC
72.0	1.1	61588	24.15	70806	6698	-	-	**PH142**	364/365TC
65.0	1.0	68253	26.76	70806	6588	-	-	**PH142**	364/365TC

5.2 IH/IHA GEAR REDUCER - fs=1, 1750 rpm

Maximum torque [in-lbs]	Output speed [rpm]	Exact ratio i	Maximum Power [HP]	OHL		Gear Reducer	
				Output shaft [lbs]	Input shaft [lbs]	Motorized Input	Shaft Input
841	373.0	4.70	5.2	609	157	**PH032**	**IH032**
929	281.0	6.23	4.3	668	184	**PH032**	**IH032**
1106	225.0	7.76	4.1	691	190	**PH032**	**IH032**
1151	197.0	8.87	3.8	724	201	**PH032**	**IH032**
1239	173.0	10.14	3.5	746	208	**PH032**	**IH032**
1283	149.0	11.76	3.2	790	219	**PH032**	**IH032**
1505	128.0	13.72	3.2	790	219	**PH032**	**IH032**
1505	119.0	14.66	3	819	225	**PH032**	**IH032**
1682	104.0	16.77	2.9	828	227	**PH032**	**IH032**
1770	96.0	18.20	2.8	839	230	**PH032**	**IH032**
1770	88.0	19.90	2.6	878	237	**PH032**	**IH032**
1770	77.0	22.68	2.3	939	247	**PH032**	**IH032**
1770	73.0	23.83	2.1	964	250	**PH032**	**IH032**
1770	66.0	26.39	1.9	1013	256	**PH032**	**IH032**
1770	59.0	29.70	1.7	1069	263	**PH032**	**IH032**
1770	53.0	32.89	1.6	1125	268	**PH032**	**IH032**
1770	46.0	37.92	1.4	1202	274	**PH032**	**IH032**
1770	42.0	41.40	1.2	1236	278	**PH032**	**IH032**
1770	37.0	47.25	1.1	1236	282	**PH032**	**IH032**
1770	33.0	53.59	1	1236	286	**PH033**	**IH033**
1770	26.0	66.78	0.8	1236	292	**PH033**	**IH033**
1770	23.0	74.84	0.7	1236	295	**PH033**	**IH033**
1770	18.0	99.27	0.5	1236	300	**PH033**	**IH033**
1770	16.0	108.05	0.5	1236	301	**PH033**	**IH033**
1770	14.0	123.71	0.4	1236	303	**PH033**	**IH033**
1770	12.0	143.32	0.4	1236	305	**PH033**	**IH033**
1770	9.8	178.60	0.3	1236	307	**PH033**	**IH033**
1770	8.9	197.17	0.3	1236	308	**PH033**	**IH033**
1770	7.1	245.70	0.2	1236	309	**PH033**	**IH033**
221	1217.0	1.44	4.4	122	224	**PH041**	**IH041**
221	875.0	2.00	3.2	139	248	**PH041**	**IH041**
266	688.0	2.55	3	147	251	**PH041**	**IH041**
266	645.0	2.71	2.8	151	254	**PH041**	**IH041**
354	564.0	3.11	3.3	149	246	**PH041**	**IH041**
398	488.0	3.59	3.2	154	247	**PH041**	**IH041**
398	417.0	4.20	2.7	164	256	**PH041**	**IH041**
398	350.0	5.00	2.3	177	264	**PH041**	**IH041**
443	318.0	5.50	2.3	179	264	**PH041**	**IH041**
443	287.0	6.09	2.1	187	268	**PH041**	**IH041**
443	228.0	7.67	1.7	206	276	**PH041**	**IH041**
487	200.0	8.75	1.6	212	278	**PH041**	**IH041**
1416	320.0	5.46	7.5	789	98	**PH042**	**IH042**
1416	243.0	7.19	5.7	894	151	**PH042**	**IH042**

5.2 IH/IHA GEAR REDUCER - fs=1, 1750 rpm

Maximum torque [in-lbs]	Output speed [rpm]	Exact ratio i	Maximum Power [HP]	OHL		Gear Reducer	
				Output shaft [lbs]	Input shaft [lbs]	Motorized Input	Shaft Input
1859	196.0	8.91	6	889	141	**PH042**	**IH042**
2124	170.0	10.31	6	895	144	**PH042**	**IH042**
2213	148.0	11.80	5.4	940	159	**PH042**	**IH042**
2213	129.0	13.57	4.7	1006	180	**PH042**	**IH042**
2213	110.0	15.96	4	1086	202	**PH042**	**IH042**
2213	92.0	19.00	3.4	1182	221	**PH042**	**IH042**
2213	83.0	21.00	3	1239	230	**PH042**	**IH042**
2301	76.0	23.15	2.9	1272	235	**PH042**	**IH042**
2301	67.0	26.04	2.6	1347	245	**PH042**	**IH042**
2478	64.0	27.50	2.6	1338	243	**PH042**	**IH042**
2478	57.0	30.45	2.4	1411	251	**PH042**	**IH042**
2478	51.0	34.10	2.1	1484	258	**PH042**	**IH042**
2478	46.0	37.76	1.9	1484	265	**PH042**	**IH042**
2478	40.0	43.75	1.6	1484	272	**PH042**	**IH042**
2478	37.0	47.53	1.5	1484	276	**PH042**	**IH042**
2478	32.0	54.25	1.3	1484	282	**PH042**	**IH042**
2655	28.0	61.83	1.3	1484	284	**PH043**	**IH043**
2655	23.0	76.67	1	1484	291	**PH043**	**IH043**
2655	20.0	87.05	0.9	1484	295	**PH043**	**IH043**
2655	15.0	114.55	0.7	1484	301	**PH043**	**IH043**
2655	14.0	125.69	0.6	1484	303	**PH043**	**IH043**
2655	12.0	142.04	0.6	1484	305	**PH043**	**IH043**
2655	11.0	165.38	0.5	1484	307	**PH043**	**IH043**
2655	8.5	205.06	0.4	1484	310	**PH043**	**IH043**
2655	7.7	227.50	0.3	1484	311	**PH043**	**IH043**
2655	6.2	282.10	0.3	1484	313	**PH043**	**IH043**
354	1375.0	1.27	8	307	186	**PH051**	**IH051**
531	1233.0	1.42	10.7	300	142	**PH051**	**IH051**
531	824.0	2.12	7.2	351	199	**PH051**	**IH051**
620	681.0	2.57	6.9	369	203	**PH051**	**IH051**
708	553.0	3.17	6.4	390	211	**PH051**	**IH051**
797	475.0	3.69	6.2	405	214	**PH051**	**IH051**
797	438.0	4.00	5.7	418	222	**PH051**	**IH051**
841	367.0	4.77	5	444	232	**PH051**	**IH051**
885	333.0	5.25	4.8	457	236	**PH051**	**IH051**
885	301.0	5.82	4.4	476	243	**PH051**	**IH051**
885	239.0	7.33	3.5	522	258	**PH051**	**IH051**
885	209.0	8.38	3	550	265	**PH051**	**IH051**
2301	306.0	5.73	11.6	975	58	**PH052**	**IH052**
2567	254.0	6.89	10.8	1017	77	**PH052**	**IH052**
3009	205.0	8.53	10.2	1050	89	**PH052**	**IH052**
3275	183.0	9.56	9.9	1065	96	**PH052**	**IH052**
3452	152.0	11.51	8.7	1138	123	**PH052**	**IH052**

5.2 IH/IHA GEAR REDUCER - fs=1, 1750 rpm

Maximum torque [in-lbs]	Output speed [rpm]	Exact ratio i	Maximum Power [HP]	OHL		Gear Reducer	
				Output shaft [lbs]	Input shaft [lbs]	Motorized Input	Shaft Input
3806	123.0	14.24	7.7	1204	144	**PH052**	**IH052**
3983	105.0	16.59	6.9	1274	161	**PH052**	**IH052**
4071	97.0	18.00	6.5	1311	170	**PH052**	**IH052**
4071	88.0	19.97	5.9	1377	184	**PH052**	**IH052**
4160	81.0	21.67	5.6	1420	192	**PH052**	**IH052**
4160	71.0	24.71	4.9	1516	207	**PH052**	**IH052**
4337	67.0	26.18	4.8	1529	209	**PH052**	**IH052**
4337	62.0	28.44	4.4	1588	217	**PH052**	**IH052**
4337	56.0	31.52	4	1669	227	**PH052**	**IH052**
4337	53.0	33.00	3.8	1713	231	**PH052**	**IH052**
4337	45.0	38.98	3.2	1798	243	**PH052**	**IH052**
4337	39.0	45.36	2.8	1798	253	**PH052**	**IH052**
4337	36.0	49.13	2.6	1798	258	**PH052**	**IH052**
4337	31.0	56.11	2.2	1798	265	**PH052**	**IH052**
4425	30.0	58.81	2.2	1798	266	**PH053**	**IH053**
4425	24.0	72.75	1.8	1798	276	**PH053**	**IH053**
4425	19.0	90.51	1.4	1798	283	**PH053**	**IH053**
4425	16.0	108.95	1.2	1798	289	**PH053**	**IH053**
4425	13.0	134.76	1	1798	293	**PH053**	**IH053**
4425	11.0	157.29	0.8	1798	296	**PH053**	**IH053**
4425	9.0	194.56	0.7	1798	300	**PH053**	**IH053**
4425	8.1	216.38	0.6	1798	301	**PH053**	**IH053**
4425	6.5	267.65	0.5	1798	304	**PH053**	**IH053**
708	1302.0	1.34	15.1	453	471	**PH061**	**IH061**
1062	824.0	2.12	14.3	493	481	**PH061**	**IH061**
1062	681.0	2.57	11.8	535	514	**PH061**	**IH061**
1151	553.0	3.17	10.4	572	532	**PH061**	**IH061**
1328	475.0	3.69	10.3	585	534	**PH061**	**IH061**
1328	438.0	4.00	9.5	606	544	**PH061**	**IH061**
1416	367.0	4.77	8.5	642	557	**PH061**	**IH061**
1505	333.0	5.25	8.2	657	561	**PH061**	**IH061**
1505	301.0	5.82	7.4	687	572	**PH061**	**IH061**
1505	239.0	7.33	5.9	759	592	**PH061**	**IH061**
1505	209.0	8.38	5.1	804	601	**PH061**	**IH061**
4425	326.0	5.38	23.8	1574	192	**PH062**	**IH062**
4868	295.0	5.93	23.7	1584	193	**PH062**	**IH062**
4868	237.0	7.39	19	1758	281	**PH062**	**IH062**
5310	206.0	8.50	18.1	1812	300	**PH062**	**IH062**
5310	186.0	9.39	16.4	1902	332	**PH062**	**IH062**
5753	150.0	11.69	14.2	2036	371	**PH062**	**IH062**
6196	138.0	12.67	14.1	2052	373	**PH062**	**IH062**
6196	119.0	14.75	12.1	2202	411	**PH062**	**IH062**
7081	107.0	16.29	12.6	2183	403	**PH062**	**IH062**

5.2 IH/IHA GEAR REDUCER - fs=1, 1750 rpm

Maximum torque [in-lbs]	Output speed [rpm]	Exact ratio i	Maximum Power [HP]	OHL		Gear Reducer	
				Output shaft [lbs]	Input shaft [lbs]	Motorized Input	Shaft Input
7346	99.0	17.67	12	2229	413	**PH062**	**IH062**
7523	86.0	20.28	10.7	2362	437	**PH062**	**IH062**
7523	75.0	23.27	9.3	2524	463	**PH062**	**IH062**
7523	68.0	25.70	8.5	2645	480	**PH062**	**IH062**
7081	60.0	29.33	7	2698	508	**PH062**	**IH062**
7523	55.0	32.00	6.8	2698	511	**PH062**	**IH062**
7081	47.0	36.99	5.5	2698	535	**PH062**	**IH062**
7523	43.0	40.33	5.4	2698	538	**PH062**	**IH062**
7523	38.0	46.06	4.7	2698	550	**PH062**	**IH062**
7523	35.0	49.45	4.5	2698	556	**PH063**	**IH063**
7523	32.0	54.61	4.1	2698	564	**PH063**	**IH063**
7523	26.0	68.00	3.3	2698	579	**PH063**	**IH063**
7523	20.0	85.82	2.6	2698	591	**PH063**	**IH063**
7523	18.0	94.76	2.3	2698	596	**PH063**	**IH063**
7523	15.0	118.00	1.9	2698	604	**PH063**	**IH063**
7523	13.0	135.40	1.6	2698	609	**PH063**	**IH063**
7523	12.0	149.51	1.5	2698	611	**PH063**	**IH063**
7523	10.0	170.67	1.3	2698	615	**PH063**	**IH063**
7523	9.4	186.18	1.2	2698	617	**PH063**	**IH063**
7523	8.1	215.21	1	2698	620	**PH063**	**IH063**
7523	7.5	234.67	0.9	2698	621	**PH063**	**IH063**
7523	6.5	268.00	0.8	2698	624	**PH063**	**IH063**
1770	1349.0	1.30	39.1	470	207	**PH081**	**IH081**
1947	1225.0	1.43	39	473	208	**PH081**	**IH081**
2036	906.0	1.93	30.2	535	316	**PH081**	**IH081**
2478	689.0	2.54	27.9	561	343	**PH081**	**IH081**
2744	538.0	3.25	24.2	604	389	**PH081**	**IH081**
2744	470.0	3.72	21.1	645	426	**PH081**	**IH081**
2832	438.0	4.00	20.3	658	436	**PH081**	**IH081**
2832	375.0	4.67	17.4	708	472	**PH081**	**IH081**
2921	316.0	5.54	15.1	758	499	**PH081**	**IH081**
3009	288.0	6.08	14.2	782	511	**PH081**	**IH081**
3098	233.0	7.50	11.8	853	539	**PH081**	**IH081**
3098	207.0	8.44	10.5	899	555	**PH081**	**IH081**
6196	325.0	5.39	33.3	1984	183	**PH082**	**IH082**
6196	294.0	5.95	30.1	2075	230	**PH082**	**IH082**
7081	237.0	7.39	27.7	2181	266	**PH082**	**IH082**
7081	218.0	8.02	25.5	2266	298	**PH082**	**IH082**
7966	198.0	8.85	26	2264	290	**PH082**	**IH082**
9736	159.0	11.01	25.6	2300	297	**PH082**	**IH082**
12391	130.0	13.50	26.5	2230	283	**PH082**	**IH082**
13276	117.0	14.90	25.8	2258	294	**PH082**	**IH082**
13276	105.0	16.62	23.1	2397	334	**PH082**	**IH082**

5.2 IH/IHA GEAR REDUCER - fs=1, 1750 rpm

Maximum torque [in-lbs]	Output speed [rpm]	Exact ratio i	Maximum Power [HP]	OHL		Gear Reducer	
				Output shaft [lbs]	Input shaft [lbs]	Motorized Input	Shaft Input
13276	94.0	18.52	20.7	2546	369	**PH082**	**IH082**
14161	90.0	19.38	21.1	2502	363	**PH082**	**IH082**
14161	82.0	21.39	19.1	2633	392	**PH082**	**IH082**
14161	77.0	22.80	18	2724	410	**PH082**	**IH082**
14161	66.0	26.60	15.4	2954	448	**PH082**	**IH082**
14161	63.0	27.88	14.7	3026	459	**PH082**	**IH082**
14161	56.0	31.15	13.1	3213	481	**PH082**	**IH082**
14161	51.0	34.38	11.9	3367	500	**PH082**	**IH082**
14161	45.0	38.70	10.6	3580	519	**PH082**	**IH082**
14161	41.0	42.75	9.6	3745	534	**PH082**	**IH082**
14161	36.0	48.13	8.5	3984	550	**PH082**	**IH082**
14161	31.0	56.52	7.4	4047	569	**PH083**	**IH083**
15931	24.0	71.48	6.6	4047	581	**PH083**	**IH083**
15931	22.0	78.87	6	4047	590	**PH083**	**IH083**
15931	20.0	85.56	5.5	4047	596	**PH083**	**IH083**
15931	18.0	98.09	4.8	4047	607	**PH083**	**IH083**
15931	16.0	112.78	4.2	4047	616	**PH083**	**IH083**
15931	14.0	124.44	3.8	4047	621	**PH083**	**IH083**
15931	12.0	142.15	3.3	4047	628	**PH083**	**IH083**
15931	11.0	154.76	3	4047	632	**PH083**	**IH083**
15931	11.0	162.35	2.9	4047	634	**PH083**	**IH083**
15931	9.8	179.13	2.6	4047	638	**PH083**	**IH083**
15931	9.0	195.07	2.4	4047	641	**PH083**	**IH083**
15931	7.9	222.78	2.1	4047	646	**PH083**	**IH083**
3540	1354.0	1.29	78.4	573	408	**PH101**	**IH101**
3983	1241.0	1.41	80.8	568	393	**PH101**	**IH101**
3983	861.0	2.03	56.1	676	546	**PH101**	**IH101**
4868	705.0	2.48	56.2	683	545	**PH101**	**IH101**
5310	535.0	3.27	46.4	750	605	**PH101**	**IH101**
5310	473.0	3.70	41.1	796	638	**PH101**	**IH101**
5399	414.0	4.22	36.6	842	666	**PH101**	**IH101**
5487	359.0	4.88	32.2	894	693	**PH101**	**IH101**
5487	332.0	5.27	29.8	927	707	**PH101**	**IH101**
5664	281.0	6.23	26	989	731	**PH101**	**IH101**
5753	232.0	7.55	21.8	1073	757	**PH101**	**IH101**
5753	208.0	8.40	19.6	1124	770	**PH101**	**IH101**
15931	333.0	5.26	87.5	2054	389	**PH102**	**IH102**
17701	275.0	6.36	80.6	2120	432	**PH102**	**IH102**
20357	248.0	7.05	83.5	1998	414	**PH102**	**IH102**
22127	212.0	8.27	77.3	2040	451	**PH102**	**IH102**
24782	175.0	9.99	71.7	2060	485	**PH102**	**IH102**
26552	158.0	11.09	69.3	2044	500	**PH102**	**IH102**
27437	131.0	13.32	59.6	2255	559	**PH102**	**IH102**

5.2 IH/IHA GEAR REDUCER - fs=1, 1750 rpm

Maximum torque [in-lbs]	Output speed [rpm]	Exact ratio i	Maximum Power [HP]	OHL		Gear Reducer	
				Output shaft [lbs]	Input shaft [lbs]	Motorized Input	Shaft Input
28322	109.0	16.09	50.9	2479	611	**PH102**	**IH102**
28322	98.0	17.85	45.9	2667	642	**PH102**	**IH102**
28322	88.0	19.85	41.3	2864	670	**PH102**	**IH102**
28322	82.0	21.44	38.2	2998	688	**PH102**	**IH102**
29207	73.0	23.97	35.2	3139	706	**PH102**	**IH102**
29207	68.0	25.89	32.6	3281	722	**PH102**	**IH102**
29207	61.0	28.73	29.4	3506	742	**PH102**	**IH102**
28322	57.0	30.72	26.7	3735	758	**PH102**	**IH102**
28322	51.0	34.20	24	3979	775	**PH102**	**IH102**
24782	46.0	38.45	18.6	4555	807	**PH102**	**IH102**
29207	42.0	41.30	20.5	4343	796	**PH102**	**IH102**
29207	38.0	45.82	18.4	4585	808	**PH102**	**IH102**
29207	34.0	51.52	16.4	4865	820	**PH102**	**IH102**
30978	32.0	55.47	16.5	4851	822	**PH103**	**IH103**
30978	25.0	69.69	13.1	4946	842	**PH103**	**IH103**
30978	22.0	79.82	11.5	4946	852	**PH103**	**IH103**
30978	21.0	84.16	10.9	4946	855	**PH103**	**IH103**
30978	19.0	93.36	9.8	4946	862	**PH103**	**IH103**
30978	17.0	100.07	9.1	4946	866	**PH103**	**IH103**
30978	14.0	120.84	7.6	4946	875	**PH103**	**IH103**
30978	13.0	134.06	6.8	4946	879	**PH103**	**IH103**
30978	12.0	143.42	6.4	4946	882	**PH103**	**IH103**
30978	11.0	160.82	5.7	4946	886	**PH103**	**IH103**
30978	9.7	181.07	5.1	4946	890	**PH103**	**IH103**
30978	9.0	194.21	4.7	4946	892	**PH103**	**IH103**
30978	8.1	215.45	4.2	4946	895	**PH103**	**IH103**
31863	7.2	242.59	3.9	4946	897	**PH103**	**IH103**
5753	1422.0	1.23	133.8	677	195	**PH121**	**IH121**
6196	1235.0	1.42	125.2	700	240	**PH121**	**IH121**
6196	969.0	1.81	98.2	789	379	**PH121**	**IH121**
6638	875.0	2.00	95	804	395	**PH121**	**IH121**
7081	706.0	2.48	81.7	866	463	**PH121**	**IH121**
7081	592.0	2.95	68.6	943	531	**PH121**	**IH121**
7258	557.0	3.14	66.1	961	544	**PH121**	**IH121**
7523	489.0	3.58	60.2	1007	574	**PH121**	**IH121**
7523	425.0	4.12	52.3	1076	615	**PH121**	**IH121**
7700	365.0	4.80	45.9	1144	648	**PH121**	**IH121**
7789	336.0	5.21	42.8	1183	664	**PH121**	**IH121**
7966	280.0	6.25	36.5	1276	696	**PH121**	**IH121**
8851	227.0	7.70	32.9	1349	715	**PH121**	**IH121**
26552	332.0	5.27	145.6	2987	175	**PH122**	**IH122**
28322	303.0	5.78	141.8	3002	194	**PH122**	**IH122**
31863	248.0	7.05	130.7	3080	249	**PH122**	**IH122**

5.2 IH/IHA GEAR REDUCER - fs=1, 1750 rpm

Maximum torque [in-lbs]	Output speed [rpm]	Exact ratio i	Maximum Power [HP]	OHL		Gear Reducer	
				Output shaft [lbs]	Input shaft [lbs]	Motorized Input	Shaft Input
32748	226.0	7.74	122.3	3186	292	**PH122**	**IH122**
33633	206.0	8.48	114.8	3298	330	**PH122**	**IH122**
35403	169.0	10.35	99	3566	409	**PH122**	**IH122**
38943	138.0	12.66	88.9	3728	459	**PH122**	**IH122**
40713	126.0	13.86	84.9	3796	479	**PH122**	**IH122**
42484	103.0	16.92	72.6	4146	541	**PH122**	**IH122**
44254	91.0	19.32	66.2	4322	573	**PH122**	**IH122**
44254	85.0	20.57	62.2	4505	593	**PH122**	**IH122**
44254	78.0	22.52	56.8	4741	621	**PH122**	**IH122**
44254	72.0	24.47	52.3	4967	643	**PH122**	**IH122**
44254	64.0	27.49	46.6	5311	672	**PH122**	**IH122**
44254	59.0	29.86	42.9	5557	691	**PH122**	**IH122**
44254	53.0	33.00	38.8	5891	711	**PH122**	**IH122**
44254	48.0	36.13	35.4	6210	728	**PH122**	**IH122**
44254	40.0	44.10	29	6744	760	**PH122**	**IH122**
44254	38.0	45.77	28.6	6744	765	**PH123**	**IH123**
44254	31.0	55.87	23.4	6744	791	**PH123**	**IH123**
44254	26.0	67.32	19.4	6744	810	**PH123**	**IH123**
44254	24.0	73.71	17.7	6744	819	**PH123**	**IH123**
44254	21.0	83.34	15.7	6744	829	**PH123**	**IH123**
44254	19.0	89.97	14.5	6744	834	**PH123**	**IH123**
44254	17.0	100.29	13	6744	842	**PH123**	**IH123**
44254	16.0	108.34	12.1	6744	846	**PH123**	**IH123**
44254	15.0	118.62	11	6744	852	**PH123**	**IH123**
44254	14.0	128.18	10.2	6744	856	**PH123**	**IH123**
44254	12.0	144.79	9	6744	861	**PH123**	**IH123**
44254	11.0	155.22	8.4	6744	864	**PH123**	**IH123**
44254	10.0	172.80	7.6	6744	869	**PH123**	**IH123**
44254	9.2	189.19	6.9	6744	872	**PH123**	**IH123**
44254	8.4	207.43	6.3	6744	875	**PH123**	**IH123**
44254	7.6	230.92	5.7	6744	878	**PH123**	**IH123**
44254	6.7	259.64	5	6744	-	**PH123**	**-**
40713	332.0	5.27	223.2	3757	1147	**PH142**	**IH142**
43369	275.0	6.36	197.4	3999	1288	**PH142**	**IH142**
44254	248.0	7.04	181.7	4188	1373	**PH142**	**IH142**
46909	223.0	7.84	173	4258	1421	**PH142**	**IH142**
57530	185.0	9.45	176.1	3954	1404	**PH142**	**IH142**
63725	167.0	10.47	176	3772	1405	**PH142**	**IH142**
64610	134.0	13.07	143	4360	1585	**PH142**	**IH142**
69036	111.0	15.75	126.8	4625	1673	**PH142**	**IH142**
69921	100.0	17.45	115.9	4907	1733	**PH142**	**IH142**
70806	87.0	20.04	102.2	5325	1807	**PH142**	**IH142**
70806	72.0	24.15	84.8	6022	1902	**PH142**	**IH142**

5.2 IH/IHA GEAR REDUCER - fs=1, 1750 rpm

Maximum torque [in-lbs]	Output speed [rpm]	Exact ratio i	Maximum Power [HP]	OHL		Gear Reducer	
				Output shaft [lbs]	Input shaft [lbs]	Motorized Input	Shaft Input
70806	65.0	26.76	76.5	6418	1947	**PH142**	**IH142**
70806	54.0	32.24	63.5	7170	2018	**PH142**	**IH142**
70806	45.0	38.85	52.7	7956	2077	**PH142**	**IH142**
70806	41.0	43.05	47.6	8376	2105	**PH142**	**IH142**
70806	36.0	48.35	43.3	8986	2134	**PH143**	**IH143**
70806	33.0	53.53	39.1	9409	2156	**PH143**	**IH143**
70806	30.0	59.22	35.3	9886	2176	**PH143**	**IH143**
70806	28.0	62.99	33.2	10241	2188	**PH143**	**IH143**
70806	25.0	71.35	29.3	10843	2208	**PH143**	**IH143**
70806	22.0	79.07	26.4	11549	2224	**PH143**	**IH143**
70806	20.0	86.43	24.2	12095	2236	**PH143**	**IH143**
70806	18.0	96.21	21.7	12364	2249	**PH143**	**IH143**
70806	17.0	104.51	20	12364	2258	**PH143**	**IH143**
70806	15.0	115.92	18	12364	2269	**PH143**	**IH143**
70806	14.0	128.47	16.3	12364	2278	**PH143**	**IH143**
70806	13.0	139.55	15	12364	2285	**PH143**	**IH143**
70806	11.0	154.33	13.6	12364	2293	**PH143**	**IH143**
70806	9.4	185.96	11.2	12364	2305	**PH143**	**IH143**
70806	8.5	206.08	10.1	12364	2311	**PH143**	**IH143**
168	686.0	2.55	1.9	128	-	**HA31**	**-**
177	594.0	2.94	1.7	134	-	**HA31**	**-**
177	551.0	3.18	1.6	137	-	**HA31**	**-**
177	521.0	3.36	1.5	140	-	**HA31**	**-**
186	453.0	3.87	1.4	146	-	**HA31**	**-**
186	415.0	4.21	1.3	151	-	**HA31**	**-**
195	368.0	4.75	1.2	157	-	**HA31**	**-**
204	343.0	5.10	1.1	161	-	**HA31**	**-**
204	321.0	5.45	1.1	164	-	**HA31**	**-**
204	278.0	6.30	0.9	172	-	**HA31**	**-**
195	222.0	7.88	0.7	186	-	**HA31**	**-**
124	162.0	10.83	0.3	206	-	**HA31**	**-**
708	325.0	5.38	3.8	229	74	**HA32**	**IHA32**
708	269.0	6.52	3.1	244	92	**HA32**	**IHA32**
664	216.0	8.11	2.4	262	84	**HA32**	**IHA32**
797	160.0	10.94	2.1	290	99	**HA32**	**IHA32**
708	132.0	13.25	1.5	309	82	**HA32**	**IHA32**
708	106.0	16.49	1.2	332	89	**HA32**	**IHA32**
797	86.0	20.26	1.1	356	102	**HA32**	**IHA32**
752	71.0	24.55	0.9	380	87	**HA32**	**IHA32**
708	57.0	30.55	0.7	409	84	**HA32**	**IHA32**
797	49.0	35.44	0.7	430	108	**HA32**	**IHA32**
797	40.0	44.10	0.5	450	89	**HA32**	**IHA32**
708	36.0	48.75	0.4	450	89	**HA32**	**IHA32**

5.2 IH/IHA GEAR REDUCER - fs=1, 1750 rpm

Maximum torque [in-lbs]	Output speed [rpm]	Exact ratio i	Maximum Power [HP]	OHL		Gear Reducer	
				Output shaft [lbs]	Input shaft [lbs]	Motorized Input	Shaft Input
841	29.0	60.67	0.4	450	106	**HA32**	**IHA32**
885	34.0	51.32	0.5	450	106	**HA33**	**IHA33**
885	29.0	59.65	0.4	450	106	**HA33**	**IHA33**
885	24.0	72.27	0.4	450	106	**HA33**	**IHA33**
885	19.0	89.94	0.3	450	106	**HA33**	**IHA33**
885	16.0	110.51	0.2	450	106	**HA33**	**IHA33**
885	13.0	133.88	0.2	450	106	**HA33**	**IHA33**
885	11.0	166.61	0.2	450	106	**HA33**	**IHA33**
885	9.1	193.30	0.1	450	106	**HA33**	**IHA33**
885	7.3	240.55	0.1	450	106	**HA33**	**IHA33**
885	6.3	279.07	0.1	450	106	**HA33**	**IHA33**
885	5.0	347.29	0.1	450	106	**HA33**	**IHA33**
221	1208.0	1.45	4.4	107	74	**HA41**	**IHA41**
221	594.0	2.94	2.2	135	74	**HA41**	**IHA41**
266	368.0	4.75	1.6	159	74	**HA41**	**IHA41**
266	321.0	5.45	1.4	166	74	**HA41**	**IHA41**
221	222.0	7.88	0.8	188	74	**HA41**	**IHA41**
177	162.0	10.83	0.5	209	74	**HA41**	**IHA41**
1239	325.0	5.38	6.7	482	74	**HA42**	**IHA42**
1239	269.0	6.52	5.5	513	92	**HA42**	**IHA42**
1151	216.0	8.11	4.1	552	83	**HA42**	**IHA42**
1328	160.0	10.94	3.5	610	95	**HA42**	**IHA42**
1239	132.0	13.25	2.7	651	86	**HA42**	**IHA42**
1239	106.0	16.49	2.2	700	89	**HA42**	**IHA42**
1328	86.0	20.26	1.9	751	97	**HA42**	**IHA42**
1372	71.0	24.55	1.6	800	95	**HA42**	**IHA42**
1239	57.0	30.55	1.2	861	81	**HA42**	**IHA42**
1328	49.0	35.44	1.1	905	103	**HA42**	**IHA42**
1239	40.0	44.10	0.8	967	83	**HA42**	**IHA42**
1018	36.0	48.75	0.6	967	93	**HA42**	**IHA42**
1151	29.0	60.67	0.5	967	96	**HA42**	**IHA42**
1328	34.0	51.32	0.8	967	96	**HA43**	**IHA43**
1328	29.0	59.65	0.7	967	96	**HA43**	**IHA43**
1328	24.0	72.27	0.5	967	92	**HA43**	**IHA43**
1328	19.0	89.94	0.4	967	89	**HA43**	**IHA43**
1328	16.0	110.51	0.4	967	91	**HA43**	**IHA43**
1328	13.0	133.88	0.3	967	92	**HA43**	**IHA43**
1328	11.0	166.61	0.2	967	89	**HA43**	**IHA43**
1328	9.1	193.30	0.2	967	96	**HA43**	**IHA43**
1328	7.3	240.55	0.2	967	89	**HA43**	**IHA43**
1328	6.3	279.07	0.1	967	96	**HA43**	**IHA43**
1328	5.0	347.29	0.1	967	89	**HA43**	**IHA43**
354	1208.0	1.45	7	294	74	**HA51**	**IHA51**

5.2 IH/IHA GEAR REDUCER - fs=1, 1750 rpm

Maximum torque [in-lbs]	Output speed [rpm]	Exact ratio i	Maximum Power [HP]	OHL		Gear Reducer	
				Output shaft [lbs]	Input shaft [lbs]	Motorized Input	Shaft Input
354	594.0	2.94	3.4	373	74	**HA51**	**IHA51**
443	368.0	4.75	2.7	437	74	**HA51**	**IHA51**
443	321.0	5.45	2.3	458	74	**HA51**	**IHA51**
354	222.0	7.88	1.3	518	74	**HA51**	**IHA51**
221	162.0	10.83	0.6	575	74	**HA51**	**IHA51**
2124	340.0	5.14	11.9	593	124	**HA52**	**IHA52**
2124	281.0	6.22	9.9	632	153	**HA52**	**IHA52**
2124	226.0	7.73	7.9	680	149	**HA52**	**IHA52**
2655	181.0	9.64	8	732	186	**HA52**	**IHA52**
2478	150.0	11.67	6.1	779	143	**HA52**	**IHA52**
2478	121.0	14.50	4.9	837	149	**HA52**	**IHA52**
2655	103.0	16.91	4.5	883	170	**HA52**	**IHA52**
2567	86.0	20.46	3.6	938	148	**HA52**	**IHA52**
2478	69.0	25.43	2.8	1010	144	**HA52**	**IHA52**
2655	59.0	29.89	2.6	1064	169	**HA52**	**IHA52**
2655	48.0	36.17	2.1	1139	153	**HA52**	**IHA52**
2478	39.0	44.95	1.6	1221	139	**HA52**	**IHA52**
2655	35.0	49.78	1.5	1266	179	**HA52**	**IHA52**
2567	28.0	61.87	1.2	1349	144	**HA52**	**IHA52**
2655	35.0	49.80	1.6	1266	74	**HA53**	**IHA53**
2655	29.0	60.25	1.3	1348	92	**HA53**	**IHA53**
2655	23.0	74.88	1	1349	90	**HA53**	**IHA53**
2655	20.0	88.02	0.9	1349	95	**HA53**	**IHA53**
2655	16.0	111.61	0.7	1349	88	**HA53**	**IHA53**
2655	13.0	138.71	0.6	1349	90	**HA53**	**IHA53**
2655	11.0	163.05	0.5	1349	95	**HA53**	**IHA53**
2655	8.7	200.27	0.4	1349	91	**HA53**	**IHA53**
2655	7.4	235.41	0.3	1349	95	**HA53**	**IHA53**
2655	6.1	284.81	0.3	1349	92	**HA53**	**IHA53**
2655	4.9	353.98	0.2	1349	90	**HA53**	**IHA53**
797	1313.0	1.33	17.1	428	124	**HA61**	**IHA61**
797	700.0	2.50	9.1	528	124	**HA61**	**IHA61**
974	399.0	4.38	6.4	637	124	**HA61**	**IHA61**
797	226.0	7.75	2.9	770	124	**HA61**	**IHA61**
620	164.0	10.67	1.7	857	124	**HA61**	**IHA61**
3363	340.0	5.14	18.9	876	124	**HA62**	**IHA62**
3363	281.0	6.22	15.6	933	153	**HA62**	**IHA62**
3363	226.0	7.73	12.6	1003	149	**HA62**	**IHA62**
4071	181.0	9.64	12.2	1081	180	**HA62**	**IHA62**
3894	150.0	11.67	9.7	1150	147	**HA62**	**IHA62**
3717	121.0	14.50	7.4	1236	142	**HA62**	**IHA62**
4425	103.0	16.91	7.6	1304	189	**HA62**	**IHA62**
4071	86.0	20.46	5.8	1385	141	**HA62**	**IHA62**

5.2 IH/IHA GEAR REDUCER - fs=1, 1750 rpm

Maximum torque [in-lbs]	Output speed [rpm]	Exact ratio i	Maximum Power [HP]	OHL		Gear Reducer	
				Output shaft [lbs]	Input shaft [lbs]	Motorized Input	Shaft Input
3806	69.0	25.43	4.3	1490	139	**HA62**	**IHA62**
3983	59.0	29.89	3.9	1570	165	**HA62**	**IHA62**
4160	48.0	36.17	3.3	1682	160	**HA62**	**IHA62**
3894	39.0	44.95	2.5	1798	140	**HA62**	**IHA62**
3275	35.0	49.78	1.9	1798	141	**HA62**	**IHA62**
3894	28.0	61.87	1.8	1798	177	**HA62**	**IHA62**
4248	35.0	49.80	2.5	1798	74	**HA63**	**IHA63**
4248	29.0	60.25	2.1	1798	92	**HA63**	**IHA63**
4248	23.0	74.88	1.7	1798	90	**HA63**	**IHA63**
4248	20.0	88.02	1.4	1798	95	**HA63**	**IHA63**
4248	16.0	111.61	1.1	1798	88	**HA63**	**IHA63**
4248	13.0	138.71	0.9	1798	90	**HA63**	**IHA63**
4248	11.0	163.05	0.8	1798	95	**HA63**	**IHA63**
4248	8.7	200.27	0.6	1798	91	**HA63**	**IHA63**
4248	7.4	235.41	0.5	1798	95	**HA63**	**IHA63**
4248	6.1	284.81	0.4	1798	92	**HA63**	**IHA63**
4248	4.9	353.98	0.4	1798	90	**HA63**	**IHA63**

5.3 IH/IHA GEAR REDUCER - fs=1, 1140 rpm

Maximum torque [in-lbs]	Output speed [rpm]	Exact ratio i	Maximum Power [HP]	OHL		Gear Reducer	
				Output shaft [lbs]	Input shaft [lbs]	Motorized Input	Shaft Input
841	243.0	4.70	3.4	737	157	**PH032**	**IH032**
929	183.0	6.23	2.8	808	184	**PH032**	**IH032**
1106	147.0	7.76	2.7	841	190	**PH032**	**IH032**
1151	129.0	8.87	2.4	880	201	**PH032**	**IH032**
1239	112.0	10.14	2.3	914	208	**PH032**	**IH032**
1283	97.0	11.76	2.1	963	219	**PH032**	**IH032**
1505	83.0	13.72	2.1	974	219	**PH032**	**IH032**
1505	78.0	14.66	1.9	1003	225	**PH032**	**IH032**
1682	68.0	16.77	1.9	1021	227	**PH032**	**IH032**
1770	63.0	18.20	1.8	1036	230	**PH032**	**IH032**
1770	57.0	19.90	1.7	1087	237	**PH032**	**IH032**
1770	50.0	22.68	1.5	1156	247	**PH032**	**IH032**
1770	48.0	23.83	1.4	1179	250	**PH032**	**IH032**
1770	43.0	26.39	1.3	1236	256	**PH032**	**IH032**
1770	38.0	29.70	1.1	1236	263	**PH032**	**IH032**
1770	35.0	32.89	1	1236	268	**PH032**	**IH032**
1770	30.0	37.92	0.9	1236	274	**PH032**	**IH032**
1770	28.0	41.40	0.8	1236	278	**PH032**	**IH032**
1770	24.0	47.25	0.7	1236	282	**PH032**	**IH032**
1770	21.0	53.59	0.6	1236	286	**PH033**	**IH033**
1770	17.0	66.78	0.5	1236	292	**PH033**	**IH033**
1770	15.0	74.84	0.5	1236	295	**PH033**	**IH033**
1770	11.0	99.27	0.3	1236	300	**PH033**	**IH033**
1770	11.0	108.05	0.3	1236	301	**PH033**	**IH033**
1770	9.2	123.71	0.3	1236	303	**PH033**	**IH033**
1770	8.0	143.32	0.2	1236	305	**PH033**	**IH033**
1770	6.4	178.60	0.2	1236	307	**PH033**	**IH033**
1770	5.8	197.17	0.2	1236	308	**PH033**	**IH033**
1770	4.6	245.70	0.1	1236	309	**PH033**	**IH033**
221	793.0	1.44	2.9	144	224	**PH041**	**IH041**
221	570.0	2.00	2.1	164	248	**PH041**	**IH041**
266	448.0	2.55	1.9	175	251	**PH041**	**IH041**
266	420.0	2.71	1.8	179	254	**PH041**	**IH041**
354	367.0	3.11	2.1	179	246	**PH041**	**IH041**
398	318.0	3.59	2.1	184	247	**PH041**	**IH041**
398	271.0	4.20	1.8	197	256	**PH041**	**IH041**
398	228.0	5.00	1.5	211	264	**PH041**	**IH041**
443	207.0	5.50	1.5	215	264	**PH041**	**IH041**
443	187.0	6.09	1.4	224	268	**PH041**	**IH041**
443	149.0	7.67	1.1	225	276	**PH041**	**IH041**
487	130.0	8.75	1	225	278	**PH041**	**IH041**
1416	209.0	5.46	4.9	955	98	**PH042**	**IH042**
1416	159.0	7.19	3.7	1075	151	**PH042**	**IH042**

5.3 IH/IHA GEAR REDUCER - fs=1, 1140 rpm

Maximum torque [in-lbs]	Output speed [rpm]	Exact ratio i	Maximum Power [HP]	OHL		Gear Reducer	
				Output shaft [lbs]	Input shaft [lbs]	Motorized Input	Shaft Input
1859	128.0	8.91	3.9	1085	141	**PH042**	**IH042**
2124	111.0	10.31	3.9	1101	144	**PH042**	**IH042**
2213	97.0	11.80	3.5	1153	159	**PH042**	**IH042**
2213	84.0	13.57	3.1	1232	180	**PH042**	**IH042**
2213	71.0	15.96	2.6	1330	202	**PH042**	**IH042**
2213	60.0	19.00	2.2	1434	221	**PH042**	**IH042**
2213	54.0	21.00	2	1484	230	**PH042**	**IH042**
2301	49.0	23.15	1.9	1484	235	**PH042**	**IH042**
2301	44.0	26.04	1.7	1484	245	**PH042**	**IH042**
2478	41.0	27.50	1.7	1484	243	**PH042**	**IH042**
2478	37.0	30.45	1.5	1484	251	**PH042**	**IH042**
2478	33.0	34.10	1.4	1484	258	**PH042**	**IH042**
2478	30.0	37.76	1.2	1484	265	**PH042**	**IH042**
2478	26.0	43.75	1.1	1484	272	**PH042**	**IH042**
2478	24.0	47.53	1	1484	276	**PH042**	**IH042**
2478	21.0	54.25	0.9	1484	282	**PH042**	**IH042**
2655	18.0	61.83	0.8	1484	284	**PH043**	**IH043**
2655	15.0	76.67	0.7	1484	291	**PH043**	**IH043**
2655	13.0	87.05	0.6	1484	295	**PH043**	**IH043**
2655	10.0	114.55	0.4	1484	301	**PH043**	**IH043**
2655	9.1	125.69	0.4	1484	303	**PH043**	**IH043**
2655	8.0	142.04	0.4	1484	305	**PH043**	**IH043**
2655	6.9	165.38	0.3	1484	307	**PH043**	**IH043**
2655	5.6	205.06	0.2	1484	310	**PH043**	**IH043**
2655	5.0	227.50	0.2	1484	311	**PH043**	**IH043**
2655	4.0	282.10	0.2	1484	313	**PH043**	**IH043**
354	896.0	1.27	5.2	360	186	**PH051**	**IH051**
531	803.0	1.42	7	355	142	**PH051**	**IH051**
531	536.0	2.12	4.7	415	199	**PH051**	**IH051**
620	443.0	2.57	4.5	436	203	**PH051**	**IH051**
708	360.0	3.17	4.2	462	211	**PH051**	**IH051**
797	309.0	3.69	4	481	214	**PH051**	**IH051**
797	285.0	4.00	3.7	496	222	**PH051**	**IH051**
841	239.0	4.77	3.3	527	232	**PH051**	**IH051**
885	217.0	5.25	3.1	542	236	**PH051**	**IH051**
885	196.0	5.82	2.8	562	243	**PH051**	**IH051**
885	155.0	7.33	2.3	562	258	**PH051**	**IH051**
885	136.0	8.38	2	562	265	**PH051**	**IH051**
2301	199.0	5.73	7.6	1185	58	**PH052**	**IH052**
2567	165.0	6.89	7	1242	77	**PH052**	**IH052**
3009	134.0	8.53	6.6	1287	89	**PH052**	**IH052**
3275	119.0	9.56	6.5	1315	96	**PH052**	**IH052**
3452	99.0	11.51	5.6	1403	123	**PH052**	**IH052**

5.3 IH/IHA GEAR REDUCER - fs=1, 1140 rpm

Maximum torque [in-lbs]	Output speed [rpm]	Exact ratio i	Maximum Power [HP]	OHL		Gear Reducer	
				Output shaft [lbs]	Input shaft [lbs]	Motorized Input	Shaft Input
3806	80.0	14.24	5	1489	144	**PH052**	**IH052**
3983	69.0	16.59	4.5	1567	161	**PH052**	**IH052**
4071	63.0	18.00	4.3	1621	170	**PH052**	**IH052**
4071	57.0	19.97	3.8	1700	184	**PH052**	**IH052**
4160	53.0	21.67	3.6	1743	192	**PH052**	**IH052**
4160	46.0	24.71	3.2	1798	207	**PH052**	**IH052**
4337	44.0	26.18	3.1	1798	209	**PH052**	**IH052**
4337	40.0	28.44	2.9	1798	217	**PH052**	**IH052**
4337	36.0	31.52	2.6	1798	227	**PH052**	**IH052**
4337	35.0	33.00	2.5	1798	231	**PH052**	**IH052**
4337	29.0	38.98	2.1	1798	243	**PH052**	**IH052**
4337	25.0	45.36	1.8	1798	253	**PH052**	**IH052**
4337	23.0	49.13	1.7	1798	258	**PH052**	**IH052**
4337	20.0	56.11	1.5	1798	265	**PH052**	**IH052**
4425	19.0	58.81	1.4	1798	266	**PH053**	**IH053**
4425	16.0	72.75	1.2	1798	276	**PH053**	**IH053**
4425	13.0	90.51	0.9	1798	283	**PH053**	**IH053**
4425	10.0	108.95	0.8	1798	289	**PH053**	**IH053**
4425	8.5	134.76	0.6	1798	293	**PH053**	**IH053**
4425	7.2	157.29	0.5	1798	296	**PH053**	**IH053**
4425	5.9	194.56	0.4	1798	300	**PH053**	**IH053**
4425	5.3	216.38	0.4	1798	301	**PH053**	**IH053**
4425	4.3	267.65	0.3	1798	304	**PH053**	**IH053**
708	848.0	1.34	9.8	538	471	**PH061**	**IH061**
1062	536.0	2.12	9.3	593	481	**PH061**	**IH061**
1062	443.0	2.57	7.7	641	514	**PH061**	**IH061**
1151	360.0	3.17	6.8	686	532	**PH061**	**IH061**
1328	309.0	3.69	6.7	704	534	**PH061**	**IH061**
1328	285.0	4.00	6.2	729	544	**PH061**	**IH061**
1416	239.0	4.77	5.5	772	557	**PH061**	**IH061**
1505	217.0	5.25	5.3	791	561	**PH061**	**IH061**
1505	196.0	5.82	4.8	826	572	**PH061**	**IH061**
1505	155.0	7.33	3.8	832	592	**PH061**	**IH061**
1505	136.0	8.38	3.3	832	601	**PH061**	**IH061**
4425	212.0	5.38	15.5	1918	192	**PH062**	**IH062**
4868	192.0	5.93	15.5	1939	193	**PH062**	**IH062**
4868	154.0	7.39	12.4	2142	281	**PH062**	**IH062**
5310	134.0	8.50	11.8	2212	300	**PH062**	**IH062**
5310	121.0	9.39	10.7	2316	332	**PH062**	**IH062**
5753	98.0	11.69	9.3	2476	371	**PH062**	**IH062**
6196	90.0	12.67	9.2	2506	373	**PH062**	**IH062**
6196	77.0	14.75	7.9	2689	411	**PH062**	**IH062**
7081	70.0	16.29	8.2	2674	403	**PH062**	**IH062**

5.3 IH/IHA GEAR REDUCER - fs=1, 1140 rpm

Maximum torque [in-lbs]	Output speed [rpm]	Exact ratio i	Maximum Power [HP]	OHL		Gear Reducer	
				Output shaft [lbs]	Input shaft [lbs]	Motorized Input	Shaft Input
7346	65.0	17.67	7.8	2698	413	**PH062**	**IH062**
7523	56.0	20.28	7	2698	437	**PH062**	**IH062**
7523	49.0	23.27	6.1	2698	463	**PH062**	**IH062**
7523	44.0	25.70	5.5	2698	480	**PH062**	**IH062**
7081	39.0	29.33	4.5	2698	508	**PH062**	**IH062**
7523	36.0	32.00	4.4	2698	511	**PH062**	**IH062**
7081	31.0	36.99	3.6	2698	535	**PH062**	**IH062**
7523	28.0	40.33	3.5	2698	538	**PH062**	**IH062**
7523	25.0	46.06	3.1	2698	550	**PH062**	**IH062**
7523	23.0	49.45	2.9	2698	556	**PH063**	**IH063**
7523	21.0	54.61	2.7	2698	564	**PH063**	**IH063**
7523	17.0	68.00	2.1	2698	579	**PH063**	**IH063**
7523	13.0	85.82	1.7	2698	591	**PH063**	**IH063**
7523	12.0	94.76	1.5	2698	596	**PH063**	**IH063**
7523	9.7	118.00	1.2	2698	604	**PH063**	**IH063**
7523	8.4	135.40	1.1	2698	609	**PH063**	**IH063**
7523	7.6	149.51	1	2698	611	**PH063**	**IH063**
7523	6.7	170.67	0.8	2698	615	**PH063**	**IH063**
7523	6.1	186.18	0.8	2698	617	**PH063**	**IH063**
7523	5.3	215.21	0.7	2698	620	**PH063**	**IH063**
7523	4.9	234.67	0.6	2698	621	**PH063**	**IH063**
7523	4.3	268.00	0.5	2698	624	**PH063**	**IH063**
1770	879.0	1.30	25.4	570	207	**PH081**	**IH081**
1947	798.0	1.43	25.4	577	208	**PH081**	**IH081**
2036	590.0	1.93	19.7	650	316	**PH081**	**IH081**
2478	449.0	2.54	18.2	686	343	**PH081**	**IH081**
2744	351.0	3.25	15.7	739	389	**PH081**	**IH081**
2744	306.0	3.72	13.7	787	426	**PH081**	**IH081**
2832	285.0	4.00	13.2	804	436	**PH081**	**IH081**
2832	244.0	4.67	11.3	862	472	**PH081**	**IH081**
2921	206.0	5.54	9.8	899	499	**PH081**	**IH081**
3009	187.0	6.08	9.2	899	511	**PH081**	**IH081**
3098	152.0	7.50	7.7	899	539	**PH081**	**IH081**
3098	135.0	8.44	6.8	899	555	**PH081**	**IH081**
6196	212.0	5.39	21.7	2397	183	**PH082**	**IH082**
6196	192.0	5.95	19.6	2502	230	**PH082**	**IH082**
7081	154.0	7.39	18	2645	266	**PH082**	**IH082**
7081	142.0	8.02	16.6	2740	298	**PH082**	**IH082**
7966	129.0	8.85	17	2753	290	**PH082**	**IH082**
9736	104.0	11.01	16.7	2821	297	**PH082**	**IH082**
12391	84.0	13.50	17.3	2805	283	**PH082**	**IH082**
13276	77.0	14.90	16.8	2827	294	**PH082**	**IH082**
13276	69.0	16.62	15.1	2989	334	**PH082**	**IH082**

5.3 IH/IHA GEAR REDUCER - fs=1, 1140 rpm

Maximum torque [in-lbs]	Output speed [rpm]	Exact ratio i	Maximum Power [HP]	OHL		Gear Reducer	
				Output shaft [lbs]	Input shaft [lbs]	Motorized Input	Shaft Input
13276	62.0	18.52	13.5	3154	369	**PH082**	**IH082**
14161	59.0	19.38	13.8	3129	363	**PH082**	**IH082**
14161	53.0	21.39	12.5	3303	392	**PH082**	**IH082**
14161	50.0	22.80	11.7	3400	410	**PH082**	**IH082**
14161	43.0	26.60	10	3660	448	**PH082**	**IH082**
14161	41.0	27.88	9.6	3745	459	**PH082**	**IH082**
14161	37.0	31.15	8.6	3933	481	**PH082**	**IH082**
14161	33.0	34.38	7.8	4047	500	**PH082**	**IH082**
14161	29.0	38.70	6.9	4047	519	**PH082**	**IH082**
14161	27.0	42.75	6.2	4047	534	**PH082**	**IH082**
14161	24.0	48.13	5.5	4047	550	**PH082**	**IH082**
14161	20.0	56.52	4.8	4047	569	**PH083**	**IH083**
15931	16.0	71.48	4.3	4047	581	**PH083**	**IH083**
15931	14.0	78.87	3.9	4047	590	**PH083**	**IH083**
15931	13.0	85.56	3.6	4047	596	**PH083**	**IH083**
15931	12.0	98.09	3.1	4047	607	**PH083**	**IH083**
15931	10.0	112.78	2.7	4047	616	**PH083**	**IH083**
15931	9.2	124.44	2.5	4047	621	**PH083**	**IH083**
15931	8.0	142.15	2.2	4047	628	**PH083**	**IH083**
15931	7.4	154.76	2	4047	632	**PH083**	**IH083**
15931	7.0	162.35	1.9	4047	634	**PH083**	**IH083**
15931	6.4	179.13	1.7	4047	638	**PH083**	**IH083**
15931	5.8	195.07	1.6	4047	641	**PH083**	**IH083**
15931	5.1	222.78	1.4	4047	646	**PH083**	**IH083**
3540	882.0	1.29	51.1	697	408	**PH101**	**IH101**
3983	808.0	1.41	52.7	696	393	**PH101**	**IH101**
3983	561.0	2.03	36.5	819	546	**PH101**	**IH101**
4868	459.0	2.48	36.6	836	545	**PH101**	**IH101**
5310	348.0	3.27	30.3	919	605	**PH101**	**IH101**
5310	308.0	3.70	26.8	971	638	**PH101**	**IH101**
5399	270.0	4.22	23.8	1024	666	**PH101**	**IH101**
5487	234.0	4.88	21	1086	693	**PH101**	**IH101**
5487	216.0	5.27	19.4	1124	707	**PH101**	**IH101**
5664	183.0	6.23	17	1124	731	**PH101**	**IH101**
5753	151.0	7.55	14.2	1124	757	**PH101**	**IH101**
5753	136.0	8.40	12.8	1124	770	**PH101**	**IH101**
15931	217.0	5.26	57	2605	389	**PH102**	**IH102**
17701	179.0	6.36	52.5	2709	432	**PH102**	**IH102**
20357	162.0	7.05	54.4	2602	414	**PH102**	**IH102**
22127	138.0	8.27	50.4	2682	451	**PH102**	**IH102**
24782	114.0	9.99	46.7	2743	485	**PH102**	**IH102**
26552	103.0	11.09	45.1	2749	500	**PH102**	**IH102**
27437	86.0	13.32	38.8	2993	559	**PH102**	**IH102**

5.3 IH/IHA GEAR REDUCER - fs=1, 1140 rpm

Maximum torque [in-lbs]	Output speed [rpm]	Exact ratio i	Maximum Power [HP]	OHL		Gear Reducer	
				Output shaft [lbs]	Input shaft [lbs]	Motorized Input	Shaft Input
28322	71.0	16.09	33.2	3279	611	**PH102**	**IH102**
28322	64.0	17.85	29.9	3491	642	**PH102**	**IH102**
28322	57.0	19.85	26.9	3735	670	**PH102**	**IH102**
28322	53.0	21.44	24.9	3894	688	**PH102**	**IH102**
29207	48.0	23.97	23	4031	706	**PH102**	**IH102**
29207	44.0	25.89	21.3	4233	722	**PH102**	**IH102**
29207	40.0	28.73	19.2	4460	742	**PH102**	**IH102**
28322	37.0	30.72	17.4	4737	758	**PH102**	**IH102**
28322	33.0	34.20	15.6	4946	775	**PH102**	**IH102**
24782	30.0	38.45	12.1	4946	807	**PH102**	**IH102**
29207	28.0	41.30	13.3	4946	796	**PH102**	**IH102**
29207	25.0	45.82	12	4946	808	**PH102**	**IH102**
29207	22.0	51.52	10.7	4946	820	**PH102**	**IH102**
30978	21.0	55.47	10.7	4946	822	**PH103**	**IH103**
30978	16.0	69.69	8.6	4946	842	**PH103**	**IH103**
30978	14.0	79.82	7.5	4946	852	**PH103**	**IH103**
30978	14.0	84.16	7.1	4946	855	**PH103**	**IH103**
30978	12.0	93.36	6.4	4946	862	**PH103**	**IH103**
30978	11.0	100.07	6	4946	866	**PH103**	**IH103**
30978	9.4	120.84	4.9	4946	875	**PH103**	**IH103**
30978	8.5	134.06	4.4	4946	879	**PH103**	**IH103**
30978	7.9	143.42	4.2	4946	882	**PH103**	**IH103**
30978	7.1	160.82	3.7	4946	886	**PH103**	**IH103**
30978	6.3	181.07	3.3	4946	890	**PH103**	**IH103**
30978	5.9	194.21	3.1	4946	892	**PH103**	**IH103**
30978	5.3	215.45	2.8	4946	895	**PH103**	**IH103**
31863	4.7	242.59	2.5	4946	897	**PH103**	**IH103**
5753	926.0	1.23	87.2	833	195	**PH121**	**IH121**
6196	805.0	1.42	81.5	863	240	**PH121**	**IH121**
6196	631.0	1.81	63.9	966	379	**PH121**	**IH121**
6638	570.0	2.00	61.9	986	395	**PH121**	**IH121**
7081	460.0	2.48	53.2	1062	463	**PH121**	**IH121**
7081	386.0	2.95	44.7	1151	531	**PH121**	**IH121**
7258	363.0	3.14	43.1	1173	544	**PH121**	**IH121**
7523	319.0	3.58	39.2	1227	574	**PH121**	**IH121**
7523	277.0	4.12	34.1	1308	615	**PH121**	**IH121**
7700	238.0	4.80	29.9	1349	648	**PH121**	**IH121**
7789	219.0	5.21	27.9	1349	664	**PH121**	**IH121**
7966	182.0	6.25	23.8	1349	696	**PH121**	**IH121**
8851	148.0	7.70	21.4	1349	715	**PH121**	**IH121**
26552	216.0	5.27	94.8	3782	175	**PH122**	**IH122**
28322	197.0	5.78	92.4	3823	194	**PH122**	**IH122**
31863	162.0	7.05	85.2	3947	249	**PH122**	**IH122**

5.3 IH/IHA GEAR REDUCER - fs=1, 1140 rpm

Maximum torque [in-lbs]	Output speed [rpm]	Exact ratio i	Maximum Power [HP]	OHL		Gear Reducer	
				Output shaft [lbs]	Input shaft [lbs]	Motorized Input	Shaft Input
32748	147.0	7.74	79.7	4090	292	**PH122**	**IH122**
33633	134.0	8.48	74.8	4230	330	**PH122**	**IH122**
35403	110.0	10.35	64.5	4560	409	**PH122**	**IH122**
38943	90.0	12.66	57.9	4786	459	**PH122**	**IH122**
40713	82.0	13.86	55.3	4893	479	**PH122**	**IH122**
42484	67.0	16.92	47.3	5321	541	**PH122**	**IH122**
44254	59.0	19.32	43.2	5557	573	**PH122**	**IH122**
44254	55.0	20.57	40.5	5774	593	**PH122**	**IH122**
44254	51.0	22.52	37	6013	621	**PH122**	**IH122**
44254	47.0	24.47	34.1	6279	643	**PH122**	**IH122**
44254	41.0	27.49	30.3	6740	672	**PH122**	**IH122**
44254	38.0	29.86	27.9	6744	691	**PH122**	**IH122**
44254	35.0	33.00	25.3	6744	711	**PH122**	**IH122**
44254	32.0	36.13	23.1	6744	728	**PH122**	**IH122**
44254	26.0	44.10	18.9	6744	760	**PH122**	**IH122**
44254	25.0	45.77	18.6	6744	765	**PH123**	**IH123**
44254	20.0	55.87	15.2	6744	791	**PH123**	**IH123**
44254	17.0	67.32	12.6	6744	810	**PH123**	**IH123**
44254	15.0	73.71	11.6	6744	819	**PH123**	**IH123**
44254	14.0	83.34	10.2	6744	829	**PH123**	**IH123**
44254	13.0	89.97	9.5	6744	834	**PH123**	**IH123**
44254	11.0	100.29	8.5	6744	842	**PH123**	**IH123**
44254	11.0	108.34	7.9	6744	846	**PH123**	**IH123**
44254	9.6	118.62	7.2	6744	852	**PH123**	**IH123**
44254	8.9	128.18	6.6	6744	856	**PH123**	**IH123**
44254	7.9	144.79	5.9	6744	861	**PH123**	**IH123**
44254	7.3	155.22	5.5	6744	864	**PH123**	**IH123**
44254	6.6	172.80	4.9	6744	869	**PH123**	**IH123**
44254	6.0	189.19	4.5	6744	872	**PH123**	**IH123**
44254	5.5	207.43	4.1	6744	875	**PH123**	**IH123**
44254	4.9	230.92	3.7	6744	878	**PH123**	**IH123**
44254	4.4	259.64	3.3	6744	-	**PH123**	**-**
40713	216.0	5.27	145.4	4812	1147	**PH142**	**IH142**
43369	179.0	6.36	128.6	5122	1288	**PH142**	**IH142**
44254	162.0	7.04	118.4	5339	1373	**PH142**	**IH142**
46909	145.0	7.84	112.7	5465	1421	**PH142**	**IH142**
57530	121.0	9.45	114.7	5219	1404	**PH142**	**IH142**
63725	109.0	10.47	114.6	5088	1405	**PH142**	**IH142**
64610	87.0	13.07	93.1	5796	1585	**PH142**	**IH142**
69036	72.0	15.75	82.6	6157	1673	**PH142**	**IH142**
69921	65.0	17.45	75.5	6485	1733	**PH142**	**IH142**
70806	57.0	20.04	66.6	6946	1807	**PH142**	**IH142**
70806	47.0	24.15	55.2	7764	1902	**PH142**	**IH142**

5.3 IH/IHA GEAR REDUCER - fs=1, 1140 rpm

Maximum torque [in-lbs]	Output speed [rpm]	Exact ratio i	Maximum Power [HP]	OHL		Gear Reducer	
				Output shaft [lbs]	Input shaft [lbs]	Motorized Input	Shaft Input
70806	43.0	26.76	49.8	8160	1947	**PH142**	**IH142**
70806	35.0	32.24	41.4	9122	2018	**PH142**	**IH142**
70806	29.0	38.85	34.3	10060	2077	**PH142**	**IH142**
70806	26.0	43.05	31	10632	2105	**PH142**	**IH142**
70806	24.0	48.35	28.2	11065	2134	**PH143**	**IH143**
70806	21.0	53.53	25.5	11814	2156	**PH143**	**IH143**
70806	19.0	59.22	23	12364	2176	**PH143**	**IH143**
70806	18.0	62.99	21.6	12364	2188	**PH143**	**IH143**
70806	16.0	71.35	19.1	12364	2208	**PH143**	**IH143**
70806	14.0	79.07	17.2	12364	2224	**PH143**	**IH143**
70806	13.0	86.43	15.8	12364	2236	**PH143**	**IH143**
70806	12.0	96.21	14.2	12364	2249	**PH143**	**IH143**
70806	11.0	104.51	13	12364	2258	**PH143**	**IH143**
70806	9.8	115.92	11.8	12364	2269	**PH143**	**IH143**
70806	8.9	128.47	10.6	12364	2278	**PH143**	**IH143**
70806	8.2	139.55	9.8	12364	2285	**PH143**	**IH143**
70806	7.4	154.33	8.8	12364	2293	**PH143**	**IH143**
70806	6.1	185.96	7.3	12364	2305	**PH143**	**IH143**
70806	5.5	206.08	6.6	12364	2311	**PH143**	**IH143**
168	447.0	2.55	1.2	147	-	**HA31**	**-**
177	387.0	2.94	1.1	154	-	**HA31**	**-**
177	359.0	3.18	1	158	-	**HA31**	**-**
177	340.0	3.36	1	161	-	**HA31**	**-**
186	295.0	3.87	0.9	169	-	**HA31**	**-**
186	271.0	4.21	0.8	174	-	**HA31**	**-**
195	240.0	4.75	0.8	181	-	**HA31**	**-**
204	224.0	5.10	0.7	185	-	**HA31**	**-**
204	209.0	5.45	0.7	190	-	**HA31**	**-**
204	181.0	6.30	0.6	199	-	**HA31**	**-**
195	145.0	7.88	0.5	214	-	**HA31**	**-**
124	105.0	10.83	0.2	238	-	**HA31**	**-**
708	212.0	5.38	2.5	264	74	**HA32**	**IHA32**
708	175.0	6.52	2	281	92	**HA32**	**IHA32**
664	141.0	8.11	1.5	302	84	**HA32**	**IHA32**
797	104.0	10.94	1.4	335	99	**HA32**	**IHA32**
708	86.0	13.25	1	356	82	**HA32**	**IHA32**
708	69.0	16.49	0.8	384	89	**HA32**	**IHA32**
797	56.0	20.26	0.7	411	102	**HA32**	**IHA32**
752	46.0	24.55	0.6	439	87	**HA32**	**IHA32**
708	37.0	30.55	0.4	450	84	**HA32**	**IHA32**
797	32.0	35.44	0.4	450	108	**HA32**	**IHA32**
797	26.0	44.10	0.3	450	89	**HA32**	**IHA32**
708	23.0	48.75	0.3	450	89	**HA32**	**IHA32**

5.3 IH/IHA GEAR REDUCER - fs=1, 1140 rpm

Maximum torque [in-lbs]	Output speed [rpm]	Exact ratio i	Maximum Power [HP]	OHL		Gear Reducer	
				Output shaft [lbs]	Input shaft [lbs]	Motorized Input	Shaft Input
841	19.0	60.67	0.3	450	106	**HA32**	**IHA32**
885	22.0	51.32	0.3	450	106	**HA33**	**IHA33**
885	19.0	59.65	0.3	450	106	**HA33**	**IHA33**
885	16.0	72.27	0.2	450	106	**HA33**	**IHA33**
885	13.0	89.94	0.2	450	106	**HA33**	**IHA33**
885	10.0	110.51	0.2	450	106	**HA33**	**IHA33**
885	8.5	133.88	0.1	450	106	**HA33**	**IHA33**
885	6.8	166.61	0.1	450	106	**HA33**	**IHA33**
885	5.9	193.30	0.1	450	106	**HA33**	**IHA33**
885	4.7	240.55	0.1	450	106	**HA33**	**IHA33**
885	4.1	279.07	0.1	450	106	**HA33**	**IHA33**
885	3.3	347.29	-	450	106	**HA33**	**IHA33**
221	787.0	1.45	2.8	123	74	**HA41**	**IHA41**
221	387.0	2.94	1.4	156	74	**HA41**	**IHA41**
266	240.0	4.75	1	183	74	**HA41**	**IHA41**
266	209.0	5.45	0.9	192	74	**HA41**	**IHA41**
221	145.0	7.88	0.5	216	74	**HA41**	**IHA41**
177	105.0	10.83	0.3	241	74	**HA41**	**IHA41**
1239	212.0	5.38	4.3	556	74	**HA42**	**IHA42**
1239	175.0	6.52	3.6	592	92	**HA42**	**IHA42**
1151	141.0	8.11	2.7	636	83	**HA42**	**IHA42**
1328	104.0	10.94	2.3	704	95	**HA42**	**IHA42**
1239	86.0	13.25	1.8	751	86	**HA42**	**IHA42**
1239	69.0	16.49	1.4	808	89	**HA42**	**IHA42**
1328	56.0	20.26	1.2	866	97	**HA42**	**IHA42**
1372	46.0	24.55	1.1	925	95	**HA42**	**IHA42**
1239	37.0	30.55	0.8	967	81	**HA42**	**IHA42**
1328	32.0	35.44	0.7	967	103	**HA42**	**IHA42**
1239	26.0	44.10	0.5	967	83	**HA42**	**IHA42**
1018	23.0	48.75	0.4	967	93	**HA42**	**IHA42**
1151	19.0	60.67	0.4	967	96	**HA42**	**IHA42**
1328	22.0	51.32	0.5	967	96	**HA43**	**IHA43**
1328	19.0	59.65	0.4	967	96	**HA43**	**IHA43**
1328	16.0	72.27	0.4	967	92	**HA43**	**IHA43**
1328	13.0	89.94	0.3	967	89	**HA43**	**IHA43**
1328	10.0	110.51	0.2	967	91	**HA43**	**IHA43**
1328	8.5	133.88	0.2	967	92	**HA43**	**IHA43**
1328	6.8	166.61	0.2	967	89	**HA43**	**IHA43**
1328	5.9	193.30	0.1	967	96	**HA43**	**IHA43**
1328	4.7	240.55	0.1	967	89	**HA43**	**IHA43**
1328	4.1	279.07	0.1	967	96	**HA43**	**IHA43**
1328	3.3	347.29	0.1	967	89	**HA43**	**IHA43**
354	787.0	1.45	4.6	339	74	**HA51**	**IHA51**

5.3 IH/IHA GEAR REDUCER - fs=1, 1140 rpm

Maximum torque [in-lbs]	Output speed [rpm]	Exact ratio i	Maximum Power [HP]	OHL		Gear Reducer	
				Output shaft [lbs]	Input shaft [lbs]	Motorized Input	Shaft Input
354	387.0	2.94	2.2	430	74	**HA51**	**IHA51**
443	240.0	4.75	1.7	504	74	**HA51**	**IHA51**
443	209.0	5.45	1.5	528	74	**HA51**	**IHA51**
354	145.0	7.88	0.8	597	74	**HA51**	**IHA51**
221	105.0	10.83	0.4	664	74	**HA51**	**IHA51**
2124	222.0	5.14	7.8	684	124	**HA52**	**IHA52**
2124	183.0	6.22	6.4	729	153	**HA52**	**IHA52**
2124	147.0	7.73	5.2	785	149	**HA52**	**IHA52**
2655	118.0	9.64	5.2	844	186	**HA52**	**IHA52**
2478	98.0	11.67	4	898	143	**HA52**	**IHA52**
2478	79.0	14.50	3.2	965	149	**HA52**	**IHA52**
2655	67.0	16.91	3	1020	170	**HA52**	**IHA52**
2567	56.0	20.46	2.4	1082	148	**HA52**	**IHA52**
2478	45.0	25.43	1.8	1164	144	**HA52**	**IHA52**
2655	38.0	29.89	1.7	1232	169	**HA52**	**IHA52**
2655	32.0	36.17	1.4	1304	153	**HA52**	**IHA52**
2478	25.0	44.95	1	1349	139	**HA52**	**IHA52**
2655	23.0	49.78	1	1349	179	**HA52**	**IHA52**
2567	18.0	61.87	0.8	1349	144	**HA52**	**IHA52**
2655	23.0	49.80	1	1349	74	**HA53**	**IHA53**
2655	19.0	60.25	0.8	1349	92	**HA53**	**IHA53**
2655	15.0	74.88	0.7	1349	90	**HA53**	**IHA53**
2655	13.0	88.02	0.6	1349	95	**HA53**	**IHA53**
2655	10.0	111.61	0.5	1349	88	**HA53**	**IHA53**
2655	8.2	138.71	0.4	1349	90	**HA53**	**IHA53**
2655	7.0	163.05	0.3	1349	95	**HA53**	**IHA53**
2655	5.7	200.27	0.3	1349	91	**HA53**	**IHA53**
2655	4.8	235.41	0.2	1349	95	**HA53**	**IHA53**
2655	4.0	284.81	0.2	1349	92	**HA53**	**IHA53**
2655	3.2	353.98	0.1	1349	90	**HA53**	**IHA53**
797	855.0	1.33	11.1	494	124	**HA61**	**IHA61**
797	456.0	2.50	5.9	609	124	**HA61**	**IHA61**
974	260.0	4.38	4.1	735	124	**HA61**	**IHA61**
797	147.0	7.75	1.9	889	124	**HA61**	**IHA61**
620	107.0	10.67	1.1	988	124	**HA61**	**IHA61**
3363	222.0	5.14	12.3	1009	124	**HA62**	**IHA62**
3363	183.0	6.22	10.2	1077	153	**HA62**	**IHA62**
3363	147.0	7.73	8.2	1158	149	**HA62**	**IHA62**
4071	118.0	9.64	8	1246	180	**HA62**	**IHA62**
3894	98.0	11.67	6.3	1326	147	**HA62**	**IHA62**
3717	79.0	14.50	4.8	1424	142	**HA62**	**IHA62**
4425	67.0	16.91	4.9	1505	189	**HA62**	**IHA62**
4071	56.0	20.46	3.7	1598	141	**HA62**	**IHA62**

5.3 IH/IHA GEAR REDUCER - fs=1, 1140 rpm

Maximum torque [in-lbs]	Output speed [rpm]	Exact ratio i	Maximum Power [HP]	OHL		Gear Reducer	
				Output shaft [lbs]	Input shaft [lbs]	Motorized Input	Shaft Input
3806	45.0	25.43	2.8	1718	139	**HA62**	**IHA62**
3983	38.0	29.89	2.5	1798	165	**HA62**	**IHA62**
4160	32.0	36.17	2.2	1798	160	**HA62**	**IHA62**
3894	25.0	44.95	1.6	1798	140	**HA62**	**IHA62**
3275	23.0	49.78	1.2	1798	141	**HA62**	**IHA62**
3894	18.0	61.87	1.2	1798	177	**HA62**	**IHA62**
4248	23.0	49.80	1.6	1798	74	**HA63**	**IHA63**
4248	19.0	60.25	1.4	1798	92	**HA63**	**IHA63**
4248	15.0	74.88	1.1	1798	90	**HA63**	**IHA63**
4248	13.0	88.02	0.9	1798	95	**HA63**	**IHA63**
4248	10.0	111.61	0.7	1798	88	**HA63**	**IHA63**
4248	8.2	138.71	0.6	1798	90	**HA63**	**IHA63**
4248	7.0	163.05	0.5	1798	95	**HA63**	**IHA63**
4248	5.7	200.27	0.4	1798	91	**HA63**	**IHA63**
4248	4.8	235.41	0.3	1798	95	**HA63**	**IHA63**
4248	4.0	284.81	0.3	1798	92	**HA63**	**IHA63**
4248	3.2	353.98	0.2	1798	90	**HA63**	**IHA63**

5.4 IH/IHA GEAR REDUCER - fs=1, 875 rpm

Maximum torque [in-lbs]	Output speed [rpm]	Exact ratio i	Maximum Power [HP]	OHL		Gear Reducer	
				Output shaft [lbs]	Input shaft [lbs]	Motorized Input	Shaft Input
841	186.0	4.70	2.6	826	157	**PH032**	**IH032**
929	140.0	6.23	2.2	907	184	**PH032**	**IH032**
1106	113.0	7.76	2.1	945	190	**PH032**	**IH032**
1151	99.0	8.87	1.9	989	201	**PH032**	**IH032**
1239	86.0	10.14	1.8	1028	208	**PH032**	**IH032**
1283	74.0	11.76	1.6	1086	219	**PH032**	**IH032**
1505	64.0	13.72	1.6	1098	219	**PH032**	**IH032**
1505	60.0	14.66	1.5	1131	225	**PH032**	**IH032**
1682	52.0	16.77	1.5	1159	227	**PH032**	**IH032**
1770	48.0	18.20	1.4	1179	230	**PH032**	**IH032**
1770	44.0	19.90	1.3	1227	237	**PH032**	**IH032**
1770	39.0	22.68	1.1	1236	247	**PH032**	**IH032**
1770	37.0	23.83	1.1	1236	250	**PH032**	**IH032**
1770	33.0	26.39	1	1236	256	**PH032**	**IH032**
1770	29.0	29.70	0.9	1236	263	**PH032**	**IH032**
1770	27.0	32.89	0.8	1236	268	**PH032**	**IH032**
1770	23.0	37.92	0.7	1236	274	**PH032**	**IH032**
1770	21.0	41.40	0.6	1236	278	**PH032**	**IH032**
1770	19.0	47.25	0.5	1236	282	**PH032**	**IH032**
1770	16.0	53.59	0.5	1236	286	**PH033**	**IH033**
1770	13.0	66.78	0.4	1236	292	**PH033**	**IH033**
1770	12.0	74.84	0.3	1236	295	**PH033**	**IH033**
1770	8.8	99.27	0.3	1236	300	**PH033**	**IH033**
1770	8.1	108.05	0.2	1236	301	**PH033**	**IH033**
1770	7.1	123.71	0.2	1236	303	**PH033**	**IH033**
1770	6.1	143.32	0.2	1236	305	**PH033**	**IH033**
1770	4.9	178.60	0.1	1236	307	**PH033**	**IH033**
1770	4.4	197.17	0.1	1236	308	**PH033**	**IH033**
1770	3.6	245.70	0.1	1236	309	**PH033**	**IH033**
221	609.0	1.44	2.2	160	224	**PH041**	**IH041**
221	438.0	2.00	1.6	182	248	**PH041**	**IH041**
266	344.0	2.55	1.5	194	251	**PH041**	**IH041**
266	322.0	2.71	1.4	199	254	**PH041**	**IH041**
354	282.0	3.11	1.6	199	246	**PH041**	**IH041**
398	244.0	3.59	1.6	206	247	**PH041**	**IH041**
398	208.0	4.20	1.4	219	256	**PH041**	**IH041**
398	175.0	5.00	1.1	225	264	**PH041**	**IH041**
443	159.0	5.50	1.2	225	264	**PH041**	**IH041**
443	144.0	6.09	1	225	268	**PH041**	**IH041**
443	114.0	7.67	0.8	225	276	**PH041**	**IH041**
487	100.0	8.75	0.8	225	278	**PH041**	**IH041**
1416	160.0	5.46	3.7	1072	98	**PH042**	**IH042**
1416	122.0	7.19	2.8	1202	151	**PH042**	**IH042**

5.4 IH/IHA GEAR REDUCER - fs=1, 875 rpm

Maximum torque [in-lbs]	Output speed [rpm]	Exact ratio i	Maximum Power [HP]	OHL		Gear Reducer	
				Output shaft [lbs]	Input shaft [lbs]	Motorized Input	Shaft Input
1859	98.0	8.91	3	1222	141	**PH042**	**IH042**
2124	85.0	10.31	3	1245	144	**PH042**	**IH042**
2213	74.0	11.80	2.7	1306	159	**PH042**	**IH042**
2213	64.0	13.57	2.4	1394	180	**PH042**	**IH042**
2213	55.0	15.96	2	1484	202	**PH042**	**IH042**
2213	46.0	19.00	1.7	1484	221	**PH042**	**IH042**
2213	42.0	21.00	1.5	1484	230	**PH042**	**IH042**
2301	38.0	23.15	1.4	1484	235	**PH042**	**IH042**
2301	34.0	26.04	1.3	1484	245	**PH042**	**IH042**
2478	32.0	27.50	1.3	1484	243	**PH042**	**IH042**
2478	29.0	30.45	1.2	1484	251	**PH042**	**IH042**
2478	26.0	34.10	1.1	1484	258	**PH042**	**IH042**
2478	23.0	37.76	0.9	1484	265	**PH042**	**IH042**
2478	20.0	43.75	0.8	1484	272	**PH042**	**IH042**
2478	18.0	47.53	0.8	1484	276	**PH042**	**IH042**
2478	16.0	54.25	0.7	1484	282	**PH042**	**IH042**
2655	14.0	61.83	0.6	1484	284	**PH043**	**IH043**
2655	11.0	76.67	0.5	1484	291	**PH043**	**IH043**
2655	10.0	87.05	0.5	1484	295	**PH043**	**IH043**
2655	7.6	114.55	0.3	1484	301	**PH043**	**IH043**
2655	7.0	125.69	0.3	1484	303	**PH043**	**IH043**
2655	6.2	142.04	0.3	1484	305	**PH043**	**IH043**
2655	5.3	165.38	0.2	1484	307	**PH043**	**IH043**
2655	4.3	205.06	0.2	1484	310	**PH043**	**IH043**
2655	3.8	227.50	0.2	1484	311	**PH043**	**IH043**
2655	3.1	282.10	0.1	1484	313	**PH043**	**IH043**
354	688.0	1.27	4	396	186	**PH051**	**IH051**
531	616.0	1.42	5.4	393	142	**PH051**	**IH051**
531	412.0	2.12	3.6	458	199	**PH051**	**IH051**
620	340.0	2.57	3.4	482	203	**PH051**	**IH051**
708	276.0	3.17	3.2	512	211	**PH051**	**IH051**
797	237.0	3.69	3.1	533	214	**PH051**	**IH051**
797	219.0	4.00	2.9	550	222	**PH051**	**IH051**
841	183.0	4.77	2.5	562	232	**PH051**	**IH051**
885	167.0	5.25	2.4	562	236	**PH051**	**IH051**
885	150.0	5.82	2.2	562	243	**PH051**	**IH051**
885	119.0	7.33	1.7	562	258	**PH051**	**IH051**
885	104.0	8.38	1.5	562	265	**PH051**	**IH051**
2301	153.0	5.73	5.8	1330	58	**PH052**	**IH052**
2567	127.0	6.89	5.4	1395	77	**PH052**	**IH052**
3009	103.0	8.53	5.1	1452	89	**PH052**	**IH052**
3275	92.0	9.56	5	1482	96	**PH052**	**IH052**
3452	76.0	11.51	4.3	1586	123	**PH052**	**IH052**

5.4 IH/IHA GEAR REDUCER - fs=1, 875 rpm

Maximum torque [in-lbs]	Output speed [rpm]	Exact ratio i	Maximum Power [HP]	OHL		Gear Reducer	
				Output shaft [lbs]	Input shaft [lbs]	Motorized Input	Shaft Input
3806	61.0	14.24	3.9	1691	144	**PH052**	**IH052**
3983	53.0	16.59	3.5	1773	161	**PH052**	**IH052**
4071	49.0	18.00	3.3	1798	170	**PH052**	**IH052**
4071	44.0	19.97	2.9	1798	184	**PH052**	**IH052**
4160	40.0	21.67	2.8	1798	192	**PH052**	**IH052**
4160	35.0	24.71	2.4	1798	207	**PH052**	**IH052**
4337	33.0	26.18	2.4	1798	209	**PH052**	**IH052**
4337	31.0	28.44	2.2	1798	217	**PH052**	**IH052**
4337	28.0	31.52	2	1798	227	**PH052**	**IH052**
4337	27.0	33.00	1.9	1798	231	**PH052**	**IH052**
4337	22.0	38.98	1.6	1798	243	**PH052**	**IH052**
4337	19.0	45.36	1.4	1798	253	**PH052**	**IH052**
4337	18.0	49.13	1.3	1798	258	**PH052**	**IH052**
4337	16.0	56.11	1.1	1798	265	**PH052**	**IH052**
4425	15.0	58.81	1.1	1798	266	**PH053**	**IH053**
4425	12.0	72.75	0.9	1798	276	**PH053**	**IH053**
4425	9.7	90.51	0.7	1798	283	**PH053**	**IH053**
4425	8.0	108.95	0.6	1798	289	**PH053**	**IH053**
4425	6.5	134.76	0.5	1798	293	**PH053**	**IH053**
4425	5.6	157.29	0.4	1798	296	**PH053**	**IH053**
4425	4.5	194.56	0.3	1798	300	**PH053**	**IH053**
4425	4.0	216.38	0.3	1798	301	**PH053**	**IH053**
4425	3.3	267.65	0.2	1798	304	**PH053**	**IH053**
708	651.0	1.34	7.5	597	471	**PH061**	**IH061**
1062	412.0	2.12	7.2	661	481	**PH061**	**IH061**
1062	340.0	2.57	5.9	715	514	**PH061**	**IH061**
1151	276.0	3.17	5.2	764	532	**PH061**	**IH061**
1328	237.0	3.69	5.2	787	534	**PH061**	**IH061**
1328	219.0	4.00	4.8	813	544	**PH061**	**IH061**
1416	183.0	4.77	4.2	832	557	**PH061**	**IH061**
1505	167.0	5.25	4.1	832	561	**PH061**	**IH061**
1505	150.0	5.82	3.7	832	572	**PH061**	**IH061**
1505	119.0	7.33	2.9	832	592	**PH061**	**IH061**
1505	104.0	8.38	2.6	832	601	**PH061**	**IH061**
4425	163.0	5.38	11.9	2153	192	**PH062**	**IH062**
4868	147.0	5.93	11.9	2186	193	**PH062**	**IH062**
4868	118.0	7.39	9.5	2407	281	**PH062**	**IH062**
5310	103.0	8.50	9	2487	300	**PH062**	**IH062**
5310	93.0	9.39	8.2	2600	332	**PH062**	**IH062**
5753	75.0	11.69	7.1	2698	371	**PH062**	**IH062**
6196	69.0	12.67	7.1	2698	373	**PH062**	**IH062**
6196	59.0	14.75	6.1	2698	411	**PH062**	**IH062**
7081	54.0	16.29	6.3	2698	403	**PH062**	**IH062**

5.4 IH/IHA GEAR REDUCER - fs=1, 875 rpm

Maximum torque [in-lbs]	Output speed [rpm]	Exact ratio i	Maximum Power [HP]	OHL		Gear Reducer	
				Output shaft [lbs]	Input shaft [lbs]	Motorized Input	Shaft Input
7346	50.0	17.67	6	2698	413	**PH062**	**IH062**
7523	43.0	20.28	5.4	2698	437	**PH062**	**IH062**
7523	38.0	23.27	4.7	2698	463	**PH062**	**IH062**
7523	34.0	25.70	4.2	2698	480	**PH062**	**IH062**
7081	30.0	29.33	3.5	2698	508	**PH062**	**IH062**
7523	27.0	32.00	3.4	2698	511	**PH062**	**IH062**
7081	24.0	36.99	2.8	2698	535	**PH062**	**IH062**
7523	22.0	40.33	2.7	2698	538	**PH062**	**IH062**
7523	19.0	46.06	2.4	2698	550	**PH062**	**IH062**
7523	18.0	49.45	2.2	2698	556	**PH063**	**IH063**
7523	16.0	54.61	2	2698	564	**PH063**	**IH063**
7523	13.0	68.00	1.6	2698	579	**PH063**	**IH063**
7523	10.0	85.82	1.3	2698	591	**PH063**	**IH063**
7523	9.2	94.76	1.2	2698	596	**PH063**	**IH063**
7523	7.4	118.00	0.9	2698	604	**PH063**	**IH063**
7523	6.5	135.40	0.8	2698	609	**PH063**	**IH063**
7523	5.9	149.51	0.7	2698	611	**PH063**	**IH063**
7523	5.1	170.67	0.7	2698	615	**PH063**	**IH063**
7523	4.7	186.18	0.6	2698	617	**PH063**	**IH063**
7523	4.1	215.21	0.5	2698	620	**PH063**	**IH063**
7523	3.7	234.67	0.5	2698	621	**PH063**	**IH063**
7523	3.3	268.00	0.4	2698	624	**PH063**	**IH063**
1770	674.0	1.30	19.5	640	207	**PH081**	**IH081**
1947	613.0	1.43	19.5	648	208	**PH081**	**IH081**
2036	453.0	1.93	15.1	729	316	**PH081**	**IH081**
2478	344.0	2.54	14	774	343	**PH081**	**IH081**
2744	269.0	3.25	12.1	834	389	**PH081**	**IH081**
2744	235.0	3.72	10.5	886	426	**PH081**	**IH081**
2832	219.0	4.00	10.1	899	436	**PH081**	**IH081**
2832	188.0	4.67	8.7	899	472	**PH081**	**IH081**
2921	158.0	5.54	7.5	899	499	**PH081**	**IH081**
3009	144.0	6.08	7.1	899	511	**PH081**	**IH081**
3098	117.0	7.50	5.9	899	539	**PH081**	**IH081**
3098	104.0	8.44	5.3	899	555	**PH081**	**IH081**
6196	162.0	5.39	16.6	2690	183	**PH082**	**IH082**
6196	147.0	5.95	15.1	2802	230	**PH082**	**IH082**
7081	118.0	7.39	13.8	2967	266	**PH082**	**IH082**
7081	109.0	8.02	12.8	3068	298	**PH082**	**IH082**
7966	99.0	8.85	13	3092	290	**PH082**	**IH082**
9736	79.0	11.01	12.8	3201	297	**PH082**	**IH082**
12391	65.0	13.50	13.3	3183	283	**PH082**	**IH082**
13276	59.0	14.90	12.9	3232	294	**PH082**	**IH082**
13276	53.0	16.62	11.6	3406	334	**PH082**	**IH082**

5.4 IH/IHA GEAR REDUCER - fs=1, 875 rpm

Maximum torque [in-lbs]	Output speed [rpm]	Exact ratio i	Maximum Power [HP]	OHL		Gear Reducer	
				Output shaft [lbs]	Input shaft [lbs]	Motorized Input	Shaft Input
13276	47.0	18.52	10.4	3608	369	**PH082**	**IH082**
14161	45.0	19.38	10.6	3580	363	**PH082**	**IH082**
14161	41.0	21.39	9.6	3745	392	**PH082**	**IH082**
14161	38.0	22.80	9	3883	410	**PH082**	**IH082**
14161	33.0	26.60	7.7	4047	448	**PH082**	**IH082**
14161	31.0	27.88	7.3	4047	459	**PH082**	**IH082**
14161	28.0	31.15	6.6	4047	481	**PH082**	**IH082**
14161	25.0	34.38	6	4047	500	**PH082**	**IH082**
14161	23.0	38.70	5.3	4047	519	**PH082**	**IH082**
14161	20.0	42.75	4.8	4047	534	**PH082**	**IH082**
14161	18.0	48.13	4.3	4047	550	**PH082**	**IH082**
14161	15.0	56.52	3.7	4047	569	**PH083**	**IH083**
15931	12.0	71.48	3.3	4047	581	**PH083**	**IH083**
15931	11.0	78.87	3	4047	590	**PH083**	**IH083**
15931	10.0	85.56	2.8	4047	596	**PH083**	**IH083**
15931	8.9	98.09	2.4	4047	607	**PH083**	**IH083**
15931	7.8	112.78	2.1	4047	616	**PH083**	**IH083**
15931	7.0	124.44	1.9	4047	621	**PH083**	**IH083**
15931	6.2	142.15	1.7	4047	628	**PH083**	**IH083**
15931	5.7	154.76	1.5	4047	632	**PH083**	**IH083**
15931	5.4	162.35	1.4	4047	634	**PH083**	**IH083**
15931	4.9	179.13	1.3	4047	638	**PH083**	**IH083**
15931	4.5	195.07	1.2	4047	641	**PH083**	**IH083**
15931	3.9	222.78	1.1	4047	646	**PH083**	**IH083**
3540	677.0	1.29	39.2	782	408	**PH101**	**IH101**
3983	620.0	1.41	40.4	784	393	**PH101**	**IH101**
3983	431.0	2.03	28	918	546	**PH101**	**IH101**
4868	353.0	2.48	28.1	941	545	**PH101**	**IH101**
5310	267.0	3.27	23.2	1035	605	**PH101**	**IH101**
5310	236.0	3.70	20.5	1093	638	**PH101**	**IH101**
5399	207.0	4.22	18.3	1124	666	**PH101**	**IH101**
5487	179.0	4.88	16.1	1124	693	**PH101**	**IH101**
5487	166.0	5.27	14.9	1124	707	**PH101**	**IH101**
5664	140.0	6.23	13	1124	731	**PH101**	**IH101**
5753	116.0	7.55	10.9	1124	757	**PH101**	**IH101**
5753	104.0	8.40	9.8	1124	770	**PH101**	**IH101**
15931	166.0	5.26	43.8	2991	389	**PH102**	**IH102**
17701	138.0	6.36	40.3	3108	432	**PH102**	**IH102**
20357	124.0	7.05	41.7	3027	414	**PH102**	**IH102**
22127	106.0	8.27	38.7	3125	451	**PH102**	**IH102**
24782	88.0	9.99	35.9	3205	485	**PH102**	**IH102**
26552	79.0	11.09	34.6	3240	500	**PH102**	**IH102**
27437	66.0	13.32	29.8	3512	559	**PH102**	**IH102**

5.4 IH/IHA GEAR REDUCER - fs=1, 875 rpm

Maximum torque [in-lbs]	Output speed [rpm]	Exact ratio i	Maximum Power [HP]	OHL		Gear Reducer	
				Output shaft [lbs]	Input shaft [lbs]	Motorized Input	Shaft Input
28322	54.0	16.09	25.5	3853	611	**PH102**	**IH102**
28322	49.0	17.85	22.9	4070	642	**PH102**	**IH102**
28322	44.0	19.85	20.6	4318	670	**PH102**	**IH102**
28322	41.0	21.44	19.1	4486	688	**PH102**	**IH102**
29207	37.0	23.97	17.6	4651	706	**PH102**	**IH102**
29207	34.0	25.89	16.3	4865	722	**PH102**	**IH102**
29207	30.0	28.73	14.7	4946	742	**PH102**	**IH102**
28322	28.0	30.72	13.3	4946	758	**PH102**	**IH102**
28322	26.0	34.20	12	4946	775	**PH102**	**IH102**
24782	23.0	38.45	9.3	4946	807	**PH102**	**IH102**
29207	21.0	41.30	10.2	4946	796	**PH102**	**IH102**
29207	19.0	45.82	9.2	4946	808	**PH102**	**IH102**
29207	17.0	51.52	8.2	4946	820	**PH102**	**IH102**
30978	16.0	55.47	8.2	4946	822	**PH103**	**IH103**
30978	13.0	69.69	6.6	4946	842	**PH103**	**IH103**
30978	11.0	79.82	5.7	4946	852	**PH103**	**IH103**
30978	10.0	84.16	5.4	4946	855	**PH103**	**IH103**
30978	9.4	93.36	4.9	4946	862	**PH103**	**IH103**
30978	8.7	100.07	4.6	4946	866	**PH103**	**IH103**
30978	7.2	120.84	3.8	4946	875	**PH103**	**IH103**
30978	6.5	134.06	3.4	4946	879	**PH103**	**IH103**
30978	6.1	143.42	3.2	4946	882	**PH103**	**IH103**
30978	5.4	160.82	2.8	4946	886	**PH103**	**IH103**
30978	4.8	181.07	2.5	4946	890	**PH103**	**IH103**
30978	4.5	194.21	2.4	4946	892	**PH103**	**IH103**
30978	4.1	215.45	2.1	4946	895	**PH103**	**IH103**
31863	3.6	242.59	1.9	4946	897	**PH103**	**IH103**
5753	711.0	1.23	66.9	940	195	**PH121**	**IH121**
6196	618.0	1.42	62.6	975	240	**PH121**	**IH121**
6196	484.0	1.81	49.1	1089	379	**PH121**	**IH121**
6638	438.0	2.00	47.5	1112	395	**PH121**	**IH121**
7081	353.0	2.48	40.9	1198	463	**PH121**	**IH121**
7081	296.0	2.95	34.3	1295	531	**PH121**	**IH121**
7258	278.0	3.14	33	1321	544	**PH121**	**IH121**
7523	244.0	3.58	30.1	1349	574	**PH121**	**IH121**
7523	213.0	4.12	26.1	1349	615	**PH121**	**IH121**
7700	182.0	4.80	23	1349	648	**PH121**	**IH121**
7789	168.0	5.21	21.4	1349	664	**PH121**	**IH121**
7966	140.0	6.25	18.2	1349	696	**PH121**	**IH121**
8851	114.0	7.70	16.5	1349	715	**PH121**	**IH121**
26552	166.0	5.27	72.8	4328	175	**PH122**	**IH122**
28322	152.0	5.78	70.9	4377	194	**PH122**	**IH122**
31863	124.0	7.05	65.4	4558	249	**PH122**	**IH122**

5.4 IH/IHA GEAR REDUCER - fs=1, 875 rpm

Maximum torque [in-lbs]	Output speed [rpm]	Exact ratio i	Maximum Power [HP]	OHL		Gear Reducer	
				Output shaft [lbs]	Input shaft [lbs]	Motorized Input	Shaft Input
32748	113.0	7.74	61.2	4711	292	**PH122**	**IH122**
33633	103.0	8.48	57.4	4870	330	**PH122**	**IH122**
35403	85.0	10.35	49.5	5229	409	**PH122**	**IH122**
38943	69.0	12.66	44.5	5525	459	**PH122**	**IH122**
40713	63.0	13.86	42.5	5648	479	**PH122**	**IH122**
42484	52.0	16.92	36.3	6096	541	**PH122**	**IH122**
44254	45.0	19.32	33.1	6424	573	**PH122**	**IH122**
44254	43.0	20.57	31.1	6577	593	**PH122**	**IH122**
44254	39.0	22.52	28.4	6744	621	**PH122**	**IH122**
44254	36.0	24.47	26.2	6744	643	**PH122**	**IH122**
44254	32.0	27.49	23.3	6744	672	**PH122**	**IH122**
44254	29.0	29.86	21.4	6744	691	**PH122**	**IH122**
44254	27.0	33.00	19.4	6744	711	**PH122**	**IH122**
44254	24.0	36.13	17.7	6744	728	**PH122**	**IH122**
44254	20.0	44.10	14.5	6744	760	**PH122**	**IH122**
44254	19.0	45.77	14.3	6744	765	**PH123**	**IH123**
44254	16.0	55.87	11.7	6744	791	**PH123**	**IH123**
44254	13.0	67.32	9.7	6744	810	**PH123**	**IH123**
44254	12.0	73.71	8.9	6744	819	**PH123**	**IH123**
44254	10.0	83.34	7.8	6744	829	**PH123**	**IH123**
44254	9.7	89.97	7.3	6744	834	**PH123**	**IH123**
44254	8.7	100.29	6.5	6744	842	**PH123**	**IH123**
44254	8.1	108.34	6	6744	846	**PH123**	**IH123**
44254	7.4	118.62	5.5	6744	852	**PH123**	**IH123**
44254	6.8	128.18	5.1	6744	856	**PH123**	**IH123**
44254	6.0	144.79	4.5	6744	861	**PH123**	**IH123**
44254	5.6	155.22	4.2	6744	864	**PH123**	**IH123**
44254	5.1	172.80	3.8	6744	869	**PH123**	**IH123**
44254	4.6	189.19	3.5	6744	872	**PH123**	**IH123**
44254	4.2	207.43	3.2	6744	875	**PH123**	**IH123**
44254	3.8	230.92	2.8	6744	878	**PH123**	**IH123**
44254	3.4	259.64	2.5	6744	-	**PH123**	**-**
40713	166.0	5.27	111.6	5538	1147	**PH142**	**IH142**
43369	138.0	6.36	98.7	5884	1288	**PH142**	**IH142**
44254	124.0	7.04	90.9	6150	1373	**PH142**	**IH142**
46909	112.0	7.84	86.5	6277	1421	**PH142**	**IH142**
57530	93.0	9.45	88	6099	1404	**PH142**	**IH142**
63725	84.0	10.47	88	5989	1405	**PH142**	**IH142**
64610	67.0	13.07	71.5	6770	1585	**PH142**	**IH142**
69036	56.0	15.75	63.4	7153	1673	**PH142**	**IH142**
69921	50.0	17.45	57.9	7563	1733	**PH142**	**IH142**
70806	44.0	20.04	51.1	8056	1807	**PH142**	**IH142**
70806	36.0	24.15	42.4	8986	1902	**PH142**	**IH142**

5.4 IH/IHA GEAR REDUCER - fs=1, 875 rpm

Maximum torque [in-lbs]	Output speed [rpm]	Exact ratio i	Maximum Power [HP]	OHL		Gear Reducer	
				Output shaft [lbs]	Input shaft [lbs]	Motorized Input	Shaft Input
70806	33.0	26.76	38.3	9409	1947	**PH142**	**IH142**
70806	27.0	32.24	31.8	10432	2018	**PH142**	**IH142**
70806	23.0	38.85	26.4	11300	2077	**PH142**	**IH142**
70806	20.0	43.05	23.8	12095	2105	**PH142**	**IH142**
70806	18.0	48.35	21.6	12364	2134	**PH143**	**IH143**
70806	16.0	53.53	19.5	12364	2156	**PH143**	**IH143**
70806	15.0	59.22	17.7	12364	2176	**PH143**	**IH143**
70806	14.0	62.99	16.6	12364	2188	**PH143**	**IH143**
70806	12.0	71.35	14.7	12364	2208	**PH143**	**IH143**
70806	11.0	79.07	13.2	12364	2224	**PH143**	**IH143**
70806	10.0	86.43	12.1	12364	2236	**PH143**	**IH143**
70806	9.1	96.21	10.9	12364	2249	**PH143**	**IH143**
70806	8.4	104.51	10	12364	2258	**PH143**	**IH143**
70806	7.5	115.92	9	12364	2269	**PH143**	**IH143**
70806	6.8	128.47	8.1	12364	2278	**PH143**	**IH143**
70806	6.3	139.55	7.5	12364	2285	**PH143**	**IH143**
70806	5.7	154.33	6.8	12364	2293	**PH143**	**IH143**
70806	4.7	185.96	5.6	12364	2305	**PH143**	**IH143**
70806	4.2	206.08	5.1	12364	2311	**PH143**	**IH143**
168	343.0	2.55	0.9	161	-	**HA31**	**-**
177	297.0	2.94	0.9	169	-	**HA31**	**-**
177	275.0	3.18	0.8	173	-	**HA31**	**-**
177	261.0	3.36	0.8	176	-	**HA31**	**-**
186	226.0	3.87	0.7	185	-	**HA31**	**-**
186	208.0	4.21	0.6	190	-	**HA31**	**-**
195	184.0	4.75	0.6	198	-	**HA31**	**-**
204	172.0	5.10	0.6	202	-	**HA31**	**-**
204	160.0	5.45	0.5	207	-	**HA31**	**-**
204	139.0	6.30	0.5	217	-	**HA31**	**-**
195	111.0	7.88	0.4	234	-	**HA31**	**-**
124	81.0	10.83	0.2	247	-	**HA31**	**-**
708	163.0	5.38	1.9	288	74	**HA32**	**IHA32**
708	134.0	6.52	1.6	308	92	**HA32**	**IHA32**
664	108.0	8.11	1.2	330	84	**HA32**	**IHA32**
797	80.0	10.94	1.1	365	99	**HA32**	**IHA32**
708	66.0	13.25	0.8	389	82	**HA32**	**IHA32**
708	53.0	16.49	0.6	419	89	**HA32**	**IHA32**
797	43.0	20.26	0.6	449	102	**HA32**	**IHA32**
752	36.0	24.55	0.4	450	87	**HA32**	**IHA32**
708	29.0	30.55	0.3	450	84	**HA32**	**IHA32**
797	25.0	35.44	0.3	450	108	**HA32**	**IHA32**
797	20.0	44.10	0.3	450	89	**HA32**	**IHA32**
708	18.0	48.75	0.2	450	89	**HA32**	**IHA32**

5.4 IH/IHA GEAR REDUCER - fs=1, 875 rpm

Maximum torque [in-lbs]	Output speed [rpm]	Exact ratio i	Maximum Power [HP]	OHL		Gear Reducer	
				Output shaft [lbs]	Input shaft [lbs]	Motorized Input	Shaft Input
841	14.0	60.67	0.2	450	106	**HA32**	**IHA32**
885	17.0	51.32	0.3	450	106	**HA33**	**IHA33**
885	15.0	59.65	0.2	450	106	**HA33**	**IHA33**
885	12.0	72.27	0.2	450	106	**HA33**	**IHA33**
885	9.7	89.94	0.1	450	106	**HA33**	**IHA33**
885	7.9	110.51	0.1	450	106	**HA33**	**IHA33**
885	6.5	133.88	0.1	450	106	**HA33**	**IHA33**
885	5.3	166.61	0.1	450	106	**HA33**	**IHA33**
885	4.5	193.30	0.1	450	106	**HA33**	**IHA33**
885	3.6	240.55	0.1	450	106	**HA33**	**IHA33**
885	3.1	279.07	-	450	106	**HA33**	**IHA33**
885	2.5	347.29	-	450	106	**HA33**	**IHA33**
221	604.0	1.45	2.2	135	74	**HA41**	**IHA41**
221	297.0	2.94	1.1	170	74	**HA41**	**IHA41**
266	184.0	4.75	0.8	200	74	**HA41**	**IHA41**
266	160.0	5.45	0.7	209	74	**HA41**	**IHA41**
221	111.0	7.88	0.4	237	74	**HA41**	**IHA41**
177	81.0	10.83	0.2	247	74	**HA41**	**IHA41**
1239	163.0	5.38	3.3	606	74	**HA42**	**IHA42**
1239	134.0	6.52	2.7	647	92	**HA42**	**IHA42**
1151	108.0	8.11	2.1	696	83	**HA42**	**IHA42**
1328	80.0	10.94	1.8	769	95	**HA42**	**IHA42**
1239	66.0	13.25	1.4	820	86	**HA42**	**IHA42**
1239	53.0	16.49	1.1	882	89	**HA42**	**IHA42**
1328	43.0	20.26	0.9	946	97	**HA42**	**IHA42**
1372	36.0	24.55	0.8	967	95	**HA42**	**IHA42**
1239	29.0	30.55	0.6	967	81	**HA42**	**IHA42**
1328	25.0	35.44	0.5	967	103	**HA42**	**IHA42**
1239	20.0	44.10	0.4	967	83	**HA42**	**IHA42**
1018	18.0	48.75	0.3	967	93	**HA42**	**IHA42**
1151	14.0	60.67	0.3	967	96	**HA42**	**IHA42**
1328	17.0	51.32	0.4	967	96	**HA43**	**IHA43**
1328	15.0	59.65	0.3	967	96	**HA43**	**IHA43**
1328	12.0	72.27	0.3	967	92	**HA43**	**IHA43**
1328	9.7	89.94	0.2	967	89	**HA43**	**IHA43**
1328	7.9	110.51	0.2	967	91	**HA43**	**IHA43**
1328	6.5	133.88	0.1	967	92	**HA43**	**IHA43**
1328	5.3	166.61	0.1	967	89	**HA43**	**IHA43**
1328	4.5	193.30	0.1	967	96	**HA43**	**IHA43**
1328	3.6	240.55	0.1	967	89	**HA43**	**IHA43**
1328	3.1	279.07	0.1	967	96	**HA43**	**IHA43**
1328	2.5	347.29	0.1	967	89	**HA43**	**IHA43**
354	604.0	1.45	3.5	371	74	**HA51**	**IHA51**

5.4 IH/IHA GEAR REDUCER - fs=1, 875 rpm

Maximum torque [in-lbs]	Output speed [rpm]	Exact ratio i	Maximum Power [HP]	OHL		Gear Reducer	
				Output shaft [lbs]	Input shaft [lbs]	Motorized Input	Shaft Input
354	297.0	2.94	1.7	470	74	**HA51**	**IHA51**
443	184.0	4.75	1.3	551	74	**HA51**	**IHA51**
443	160.0	5.45	1.2	577	74	**HA51**	**IHA51**
354	111.0	7.88	0.6	652	74	**HA51**	**IHA51**
221	81.0	10.83	0.3	674	74	**HA51**	**IHA51**
2124	170.0	5.14	6	748	124	**HA52**	**IHA52**
2124	141.0	6.22	4.9	796	153	**HA52**	**IHA52**
2124	113.0	7.73	4	857	149	**HA52**	**IHA52**
2655	91.0	9.64	4	921	186	**HA52**	**IHA52**
2478	75.0	11.67	3.1	982	143	**HA52**	**IHA52**
2478	60.0	14.50	2.5	1058	149	**HA52**	**IHA52**
2655	52.0	16.91	2.3	1109	170	**HA52**	**IHA52**
2567	43.0	20.46	1.8	1182	148	**HA52**	**IHA52**
2478	34.0	25.43	1.4	1278	144	**HA52**	**IHA52**
2655	29.0	29.89	1.3	1348	169	**HA52**	**IHA52**
2655	24.0	36.17	1.1	1349	153	**HA52**	**IHA52**
2478	19.0	44.95	0.8	1349	139	**HA52**	**IHA52**
2655	18.0	49.78	0.8	1349	179	**HA52**	**IHA52**
2567	14.0	61.87	0.6	1349	144	**HA52**	**IHA52**
2655	18.0	49.80	0.8	1349	74	**HA53**	**IHA53**
2655	15.0	60.25	0.7	1349	92	**HA53**	**IHA53**
2655	12.0	74.88	0.5	1349	90	**HA53**	**IHA53**
2655	9.9	88.02	0.4	1349	95	**HA53**	**IHA53**
2655	7.8	111.61	0.4	1349	88	**HA53**	**IHA53**
2655	6.3	138.71	0.3	1349	90	**HA53**	**IHA53**
2655	5.4	163.05	0.2	1349	95	**HA53**	**IHA53**
2655	4.4	200.27	0.2	1349	91	**HA53**	**IHA53**
2655	3.7	235.41	0.2	1349	95	**HA53**	**IHA53**
2655	3.1	284.81	0.1	1349	92	**HA53**	**IHA53**
2655	2.5	353.98	0.1	1349	90	**HA53**	**IHA53**
797	656.0	1.33	8.6	540	124	**HA61**	**IHA61**
797	350.0	2.50	4.6	666	124	**HA61**	**IHA61**
974	200.0	4.38	3.2	802	124	**HA61**	**IHA61**
797	113.0	7.75	1.5	970	124	**HA61**	**IHA61**
620	82.0	10.67	0.8	1012	124	**HA61**	**IHA61**
3363	170.0	5.14	9.5	1103	124	**HA62**	**IHA62**
3363	141.0	6.22	7.8	1174	153	**HA62**	**IHA62**
3363	113.0	7.73	6.3	1264	149	**HA62**	**IHA62**
4071	91.0	9.64	6.1	1359	180	**HA62**	**IHA62**
3894	75.0	11.67	4.8	1449	147	**HA62**	**IHA62**
3717	60.0	14.50	3.7	1561	142	**HA62**	**IHA62**
4425	52.0	16.91	3.8	1638	189	**HA62**	**IHA62**
4071	43.0	20.46	2.9	1745	141	**HA62**	**IHA62**

5.4 IH/IHA GEAR REDUCER - fs=1, 875 rpm

Maximum torque [in-lbs]	Output speed [rpm]	Exact ratio i	Maximum Power [HP]	OHL		Gear Reducer	
				Output shaft [lbs]	Input shaft [lbs]	Motorized Input	Shaft Input
3806	34.0	25.43	2.2	1798	139	**HA62**	**IHA62**
3983	29.0	29.89	1.9	1798	165	**HA62**	**IHA62**
4160	24.0	36.17	1.7	1798	160	**HA62**	**IHA62**
3894	19.0	44.95	1.3	1798	140	**HA62**	**IHA62**
3275	18.0	49.78	1	1798	141	**HA62**	**IHA62**
3894	14.0	61.87	0.9	1798	177	**HA62**	**IHA62**
4248	18.0	49.80	1.3	1798	74	**HA63**	**IHA63**
4248	15.0	60.25	1	1798	92	**HA63**	**IHA63**
4248	12.0	74.88	0.8	1798	90	**HA63**	**IHA63**
4248	9.9	88.02	0.7	1798	95	**HA63**	**IHA63**
4248	7.8	111.61	0.6	1798	88	**HA63**	**IHA63**
4248	6.3	138.71	0.5	1798	90	**HA63**	**IHA63**
4248	5.4	163.05	0.4	1798	95	**HA63**	**IHA63**
4248	4.4	200.27	0.3	1798	91	**HA63**	**IHA63**
4248	3.7	235.41	0.3	1798	95	**HA63**	**IHA63**
4248	3.1	284.81	0.2	1798	92	**HA63**	**IHA63**
4248	2.5	353.98	0.2	1798	90	**HA63**	**IHA63**

6.1 SALES CONDITIONS

All supplies effected by Motovario are governed exclusively by the general terms of sale that you can find on our website:

http://www.motovario.com/eng/corporate/sales-conditions

NOTES

NOTES

H / US / STD / REV.0 / 2017