TECHNICAL CATALOGUE

S SERIES

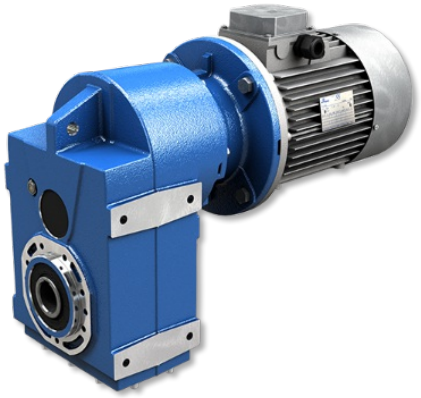

SHAFT**MOUNTED** GEARED**MOTORS**

MOTOVARIO®
HEART OF MOTION
a TECO Group company

1. GENERAL INFORMATION

1.1 SYMBOLS AND FORMULAS 4
1.1.1 Symbols 4
1.1.2 Formulas 5
1.2 PRODUCT SELECTION 7
1.3 SERVICE FACTOR 8
1.4 INSTALLATION 9

2. PRODUCT INFORMATION

2.1 DESIGN FEATURES 10
2.2 TYPOLOGY 11
2.2.1 Designation 11
2.2.2 Versions 12
2.2.3 Modularity 13
2.3 MOUNTING POSITIONS 14
2.3.1 Mounting positions 14
2.3.2 Position of terminal box 14
2.4 THERMAL POWER 15
2.4.1 Information 15
2.4.2 Verification 16
2.5 CRITICAL APPLICATIONS 17
2.5.1 Critical applications 17
2.5.2 Information 17
2.6 MOTOR FLANGE AVAILABILITY 18
2.7 OUTPUT SHAFT BEARINGS 22
2.8 OVERHUNG LOAD 23
2.8.1 Information 23
2.8.2 Input 23
2.8.3 Output 24
2.9 LUBRICATION 25
2.9.1 Information 25
2.9.2 Lubricants 25
2.9.3 Special lubricants 26

2.9.4 Quantity 27

2.10 MOMENTS OF INERTIA 28

3. DIMENSIONS

3.1 REDUCERS/GEARED MOTORS 29

3.1.1 S 052...123 29

3.1.2 S 142...153 30

3.1.3 CS 052...123 31

3.1.4 IS 052...123 32

3.1.5 IS 142...153 33

3.2 ELECTRIC MOTORS 34

3.2.1 Electric motors 34

3.2.2 Nominal power - [HP] 36

3.3 WEIGHT 37

4. ACCESSORIES AND OPTIONS

4.1 LOW SPEED SHAFTS 38

4.2 OUTPUT FLANGE 39

4.3 SHAFT MOUNTING FASTENING 40

4.3.1 Reaction bolt 40

4.3.2 Torque arm - S 142...153 40

4.4 BACKSTOP DEVICE 41

4.5 OUTPUT SHAFT WITH SHRINK DISC 42

4.6 REINFORCED OIL SEALS FOR OUTPUT SHAFT 43

4.7 ASSEMBLING/DISASSEMBLING KIT 44

5. PERFORMANCES

5.1 S GEARED MOTORS 45

5.2 IS GEAR REDUCER - fs=1, 1750 rpm 78

5.3 IS GEAR REDUCER - fs=1, 1140 rpm 85

5.4 IS GEAR REDUCER - fs=1, 875 rpm 92

6. SALES CONDITIONS

6.1 SALES CONDITIONS 99

1.1 SYMBOLS AND FORMULAS

1.1.1 Symbols

Physical dimension	Symbol	Symbol units of measure	Input	Output
Power	P	[HP]	P_1	P_2
Requested power	Pr	[HP]	Pr_1	Pr_2
Nominal power	Pn	[HP]	Pn_1	Pn_2
Torque	M	[in-lb]	M_1	M_2
Nominal torque	Mn	[in-lb]		Mn_2
Requested torque	Mr	[in-lb]	Mr_1	Mr_2
Speed	n	[rpm]	n_1	n_2
Load	F	[lb]		
Radial load	Fr	[lb]	Fr_1	Fr_2
Radial axial	Fa	[lb]	Fa_1	Fa_2
Reduction ratio	i			
Dynamic efficiency	η_d			
Speed	ips	[inch/second]		
Service factor	f.s.			
Static	s			
Dynamic	d			
Calculated	c			
Maximum	max			
Minimum	min			
Moment of inertia	J	[lb*in2]	J_1	
Ambient temperature	T_{amb}	[°F]		
Dimensions		[inch]		

1.1.2 Formulas

REDUCER		
Starting or stopping time	$t= v / a$	[s]
Velocity in rotary motion	$v= \pi * d * n / 60$ $v= \omega * r$	[m/s]
Speed velocity Angular velocity	$n= 60 * v / (\pi * d)$ $\omega= v / r$	[rpm] [rad/s]
Acceleration or deceleration according to a starting / stopping time	$a= v / t$	[m/s^2]
Angular acceleration	$\alpha= n / (9,55 * t)$ $\alpha= \omega / t$	[rad/s^2]
Starting or stopping distance (according to acceleration / deceleration or angular velocity)	$s= a * t^2 / 2$ $s= v * t / 2$	[m]
Horizontal translation force	$F= \mu * m * g$	[N]
Vertical translation force (lifting)	$F= m * g$	
Inclined plane translation force	$F= m * g (\mu * \cos\beta + \mathrm{sen}\beta)$	
m= mass [kg]; g= gravity acceleration [m/s^2]; μ= friction coefficent; β= angle of inclination		
Moment of inertia	$J= m * v^2 / \omega^2$	[kgm^2]
Torque	$M= F * d / 2$ $M= J * \omega / t$	[Nm]

MOTOR and GEARMOTOR		
Starting time	$ta= (Jext+Jm)*n_n/9,55+(M_{peak}-Mr)$	[s]
Braking time	$ts= (Jext+Jm)*n_n/9,55+(M_{peak}+Mr)$	[s]
Motor rotation angle during starting	$\varphi= n_n * ta / 19,1$	[rad]
Motor rotation angle during braking	$\varphi= n_n * ts / 19,1$	[rad]
Power available at the shaft of single phase motor	$P= V * I * \eta * \cos\omega$	[W]
Power available at the shaft of three phase motor	$P= 1,73 * V * I * \eta * \cos\omega$	[W]

RUNNING at 60Hz		
Speed velocity at 60Hz	$n_{60Hz}= 1,2 * n_{50Hz}$	[rpm]
Power at 60Hz	$P1_{60Hz}= P1_{50Hz} * V_{60Hz}/V_{50Hz}$	[kW]
If input voltage at 60 Hz (V_{60Hz}) corresponds to winding voltage at 50 Hz (V_{50Hz}), power doesn't change $P1_{60Hz}= P1_{50Hz}$ If input voltage at 60 Hz (V_{60Hz}) is 20% higher than winding voltage at 50 Hz (V_{50Hz}), power increases by 20% $P1_{60Hz}= 1,2\ P1_{50Hz}$		
Torque at 60Hz	$M_{60hz}= M_{50Hz} * P1_{60Hz} / (1,2 * P1_{50Hz})$	[Nm]
Service factor at 60Hz	$f.s_{60Hz}= f.s_{50Hz} * 1,175 * P1_{50Hz} / P1_{60Hz}$	-

1.1 SYMBOLS AND FORMULAS

UNIT CONVERSION TABLE				
Description	Imperial units	International System of Units (SI)	Technical System (metric)	
Lenght, Distance	1 inch 1 foot	[in] = 0.0254 [ft] = 0.3048	meter	[m]
Mass	1 pound 1 ounce	[lb] = 0.4536 [oz] = 0.0283	kilogram	[kg]
Volume	US liquid gallon	[gal] =3.7854	liter	[l]
Temperature	Farenheit degree	[°F] = 1.8 * °C + 32	Celsius degree	[°C]
Force	1 pound-force	$[lb_{(f)}]$ = 4.4482 $[lb_{(f)}]$ = 0.4536	newton kilogram force	[N] $[kg_{(f)}]$
Power	1 horse power	[hp] = 0.7457	kilowatt	[kW]
Torque, Work	1 pound-force inch 1 pound-force foot	$[lb_{(f)}\ in]$ = 0.1130 $[lb_{(f)}\ in]$ = 0.0115 $[lb_{(f)}\ ft]$ = 1.3560 $[lb_{(f)}\ ft]$ = 0.1383	newton meter, joule kilogram-force meter	[N m], [J] $[kg_{(f)}\ m]$
Pressure	1 pound-force per square inch (psi)	$[lb_{(f)}/in^2]$ = 0.0689	bar	[bar]
Moment of inertia	1 WK^2	$[lb_{(f)}\ ft^2]$ = 0.0421	kilogram square-meter	$[kg\ m^2]$

1.2 PRODUCT SELECTION

For correctly selecting a gear reducer or geared motor, several essential pieces of data are required:

A. The rotational input speed to the gear reducer **(n_1)** and the rotational output speed **(n_2).** Through these two values it is possible to calculate the reduction ratio **(i)** of the gear reducer using the following formula: **$i=n_1/n_2$**

B. The torque required by the application **(Mr_2)**.

The geared motor or gear reducer can be selected once this data is known.
This guide helps you to select the right product in just a few steps:

Geared motor selection

1. Determine the application's actual service factor **(s.f.)**. This parameter depends on the type of load of the powered machine, the number of starts per hour and the hours of operation (refer to the "Service factor" paragraph).
2. Calculate the input power **Pr_1** using the required torque value **Mr_2**, the speed **n_2** and dynamic efficiency value. **$Pr_1=(Mr_2*n_2)/(\mu_d*63.025)$**. The dynamic efficiency value depends on the type of gear reducer and on the number of gear reduction stages. (To calculate the efficiency value see its page).
3. Consult the geared motor performance tables and identify a normalised power value **Pn_1** exceeding the required power **Pr_1**, such that: **$Pn_1 \geq Pr_1$**
4. Once the suitable nominal power has been identified, select the geared motor capable of generating the rotational speed closest to the desired n_2 value and with service factor s.f. greater or equal to that required by the application.

In the geared motor selection tables the combinations include 2-pole, 4-pole and 6-pole motors powered at 50Hz.

Gear reducer selection

1. Determine the application's service factor **(s.f.)** (consult to the "Service factor" paragraph on its page).
2. Calculate the reduction ratio i from the requested output speed **n_2** and from the input speed **n_1. $i=n_1/n_2$**
3. Calculate the torque **Mc_2** for selecting the gear reducer through the torque required by the application **Mr_2** and the service factor s.f.: **$Mc_2=Mr_2*(f.s.)$**
4. Consult the Gear Reducer Performance tables looking for the reducer that, with the reduction ratio closer to the calculated one, has a nominal torque **Mn_2** so that: **$Mn_2 \geq Mc_2$**

Checks

Once the gear reducer or geared motor has been selected, the following checks should be performed:

A. **Thermal power**

The gear reducer's thermal power must be equal to or greater than the installed mechanical power, or the power required by the application according to the indications contained in the section (refer to the "Thermal power" paragraph).

B. **Maximum torque**

Generally, the maximum torque (peak instantaneous load) that can be applied to the gear reducer must not exceed 200% of the nominal torque **Mn_2** (ATEX - M_2max).

C. **Radial loads**

1. Verify that the radial loads acting on the input and/or output shafts are within with the values indicated in the catalogue. If they exceed these values, increase the size of the gear reducer or modify the external load capacity. During the checking phase, it is important to remember that the values indicated in the catalogue refer to loads acting on the mid-point of the shaft protrusion, therefore, if the load is applied to a different position, appropriate formulas must be used to calculate the admissible load in the desired position (refer to the "Radial loads" paragraph).
2. If accessory output shafts are present, make sure that the applied load is compatible with shaft size. If help is needed: contact MOTOVARIO TECHNICAL SERVICE.

D. If an electric motor is going to be fitted to the selected gear reducer, check for its applicability by referring to the configuration table (see paragraph "Configurations"). From IEC 180 motors, verify if necessary to support the motor with feet. In case of need please contact MOTOVARIO TECHNICAL SERVICE.

1.3 SERVICE FACTOR

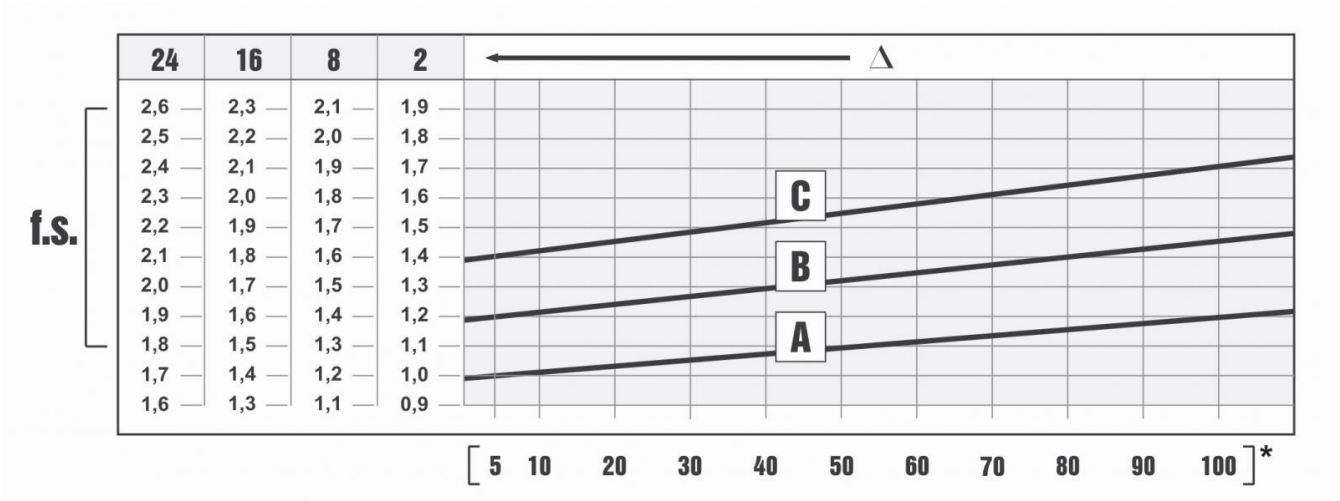

The service factor (f.s.) depends on the operating conditions the gear reducer is subjected to. The parameters that need to be taken into consideration to select the most adequate service factor correctly comprise:

- type of load of the operated machine : A - B - C
- length of daily operating time: hours/day (Δ)
- start-up frequency: starts/hour (*)

LOAD:

- **A** - uniform = fa ≤ 0,3
- **B** - moderate shocks = fa ≤ 3
- **C** - heavy shocks = fa ≤ 10

fa = Je/Jm

- Je [in-lb^2] moment of reduced external inertia at the drive-shaft
- Jm [in-lb^2] moment of inertia of motor

If fa > 10 call our Technical Service.

A. Screw feeders for light materials, fans, assembly lines, conveyor belts for light materials, small mixers, lifts, cleaning machines, fillers, control machines.
B. Winding devices, woodworking machine feeders, goods lifts, balancers, threading machines, medium mixers, conveyor belts for heavy materials, winches, sliding doors, fertilizer scrapers, packing machines, concrete mixers, crane mechanisms, milling cutters, folding machines, gear pumps.
C. Mixers for heavy materials, shears, presses, centrifuges, rotating supports, winches and lifts for heavy materials, grinding lathes, stone mills, bucket elevators, drilling machines, hammer mills, cam presses, folding machines, turntables, tumbling barrels, vibrators, shredders.

1.4 INSTALLATION

To install the gear reducer it is necessary to note the following recommendations:

- Check the correct direction of rotation of the gear reducer output shaft before fitting the unit to the machine.
- In the case of particularly lengthy periods of storage (4/6 months), if the oil seal is not immersed in the lubricant inside the unit, it is recommended to change it since the rubber could stick to the shaft or may even have lost the elasticity it needs to function properly.
- Whenever possible, protect the gear reducer against solar radiation and bad weather.
- Ensure the motor cools correctly by ensuring good passage of air from the fan side.
- In the case of ambient temperatures < 23°F or > 104°F call the Technical Service.
- The various parts (pulleys, gear wheels, couplings, shafts, etc.) must be mounted on the shafts using special threaded holes or other systems that anyhow ensure correct operation without risking damage to the bearings or external parts of the units. Lubricate the surfaces in contact to avoid seizure or oxidation.
- Painting must definitely not go over rubber parts and the holes on the breather plugs, if any.
- For units equipped with oil plugs, replace the closed plug used for shipping with the special breather plug.
- Check the correct level of the lubricant through the indicator, if there is one.
- Starting must take place gradually, without immediately applying the maximum load.
- When there are parts, objects or materials under the motor drive that can be damaged by even limited spillage of oil, special protection should be fitted.

Assembling motor on pam flange

When the unit is supplied without motor, it is necessary to follow these recommendation to ensure the correct assembly of the electric motor. Check that the tolerances for the motor shaft and flange correspond to the “standard”. Carefully clean the shaft, spigot and surfaces of the flange removing traces of paint and dirt, and confirm the key is fitted correctly. Fit the half coupling/sleeve to the motor shaft (see picture) taking care to ensure the motor shaft and bearings are not damaged by avoiding excessive force and where necessary using assembly equipment. Place the couplings elastic element onto the motor half coupling and position the motor up to the gear unit ensuring the coupling element is aligned with the driven half coupling. Complete the assembly using the fixing bolts. Key-ways with tightened tolerances.

Flexible joint

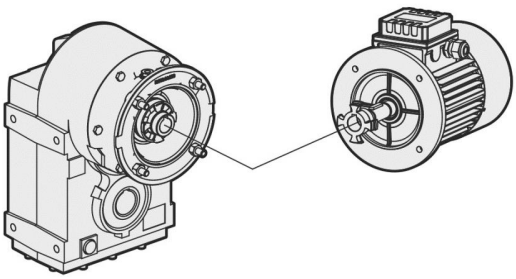

PAM Sleeve

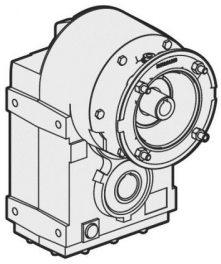

2.1 DESIGN FEATURES

Motovario products are supplied with the following surface treatment features:

Grey-coloured cast-iron cases for gears
- Die-cast materials are always painted.

Painting specifications:
- Orange-peel blue epoxy-polyester RAL 5010. Polyester resin based heat-hardening powders, altered with epoxy resins.

Mechanical properties
- Tests carried out onto degreased Unichim white lattens film thickness: 2.5 mils comply with the following specifications: adherence (ISO2409).

Heat resistance
- 24 HOURS AT 302°F.

Corrosion strength
- ASTM B 117/97 salt fog from 100 to 500 hours depending on the support's preliminary treatment.

Performance:
- Loading capacity in accordance with DIN 3990, ISO 6336, AGMA 2101, ISO 10300, DIN 3991, ISO 281, DIN 743.

Efficiency η:
- The operating efficiency is the ratio between the output power P_2 and the power absorbed by thegear reducer P_1: $\eta = P_2/P_1$.

S-range shaft-mounted reducers have an average value equal to:
S..2 stages = 0,96
S..3 stages = 0,94

2.2.1 Designation

2.2.2 Versions

S... C - S... D - S... L

S.. C FOOT-FLANGE MOUNTING / HOLLOW SHAFT

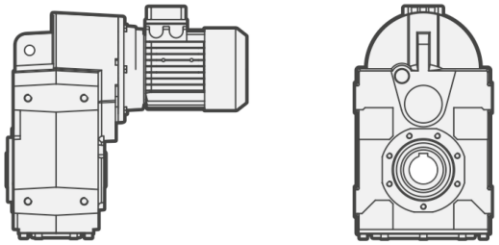

S.. D FOOT-FLANGE MOUNTING / D SOLID SHAFT

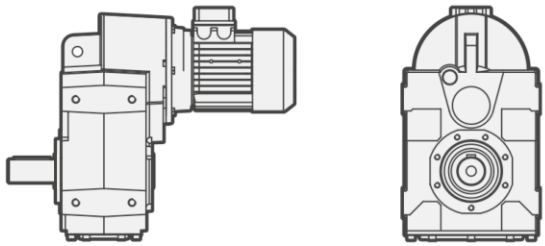

S.. L FOOT-FLANGE MOUNTING / SHRINK DISC SHAFT

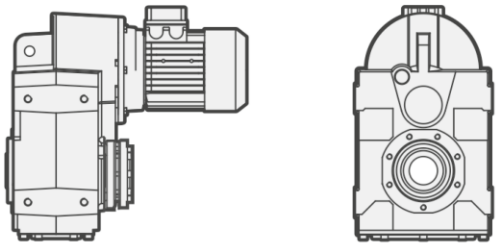

2.2.3 Modularity

S GREY CAST IRON SERIES

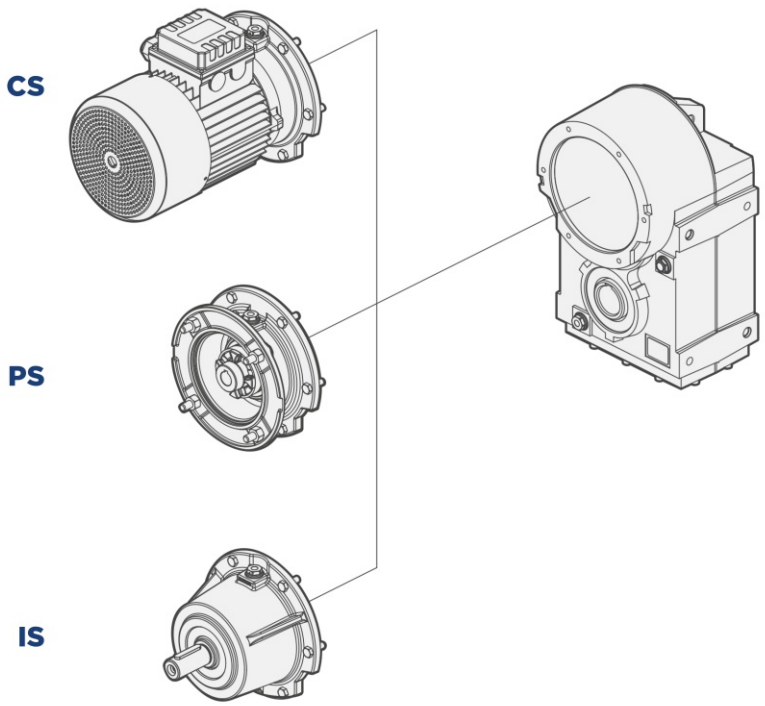

CS
Compact electric motor versions

IS
Input shaft versions

PS
Fitted for motor mounting
with flexible coupling

2.3 MOUNTING POSITIONS

2.3.1 Mounting positions

The mounting position of the gear unit identifies its space orientation. B3 mounting position, as from a technical point of view, ensures lower oil splash, better lubrication and less heating.

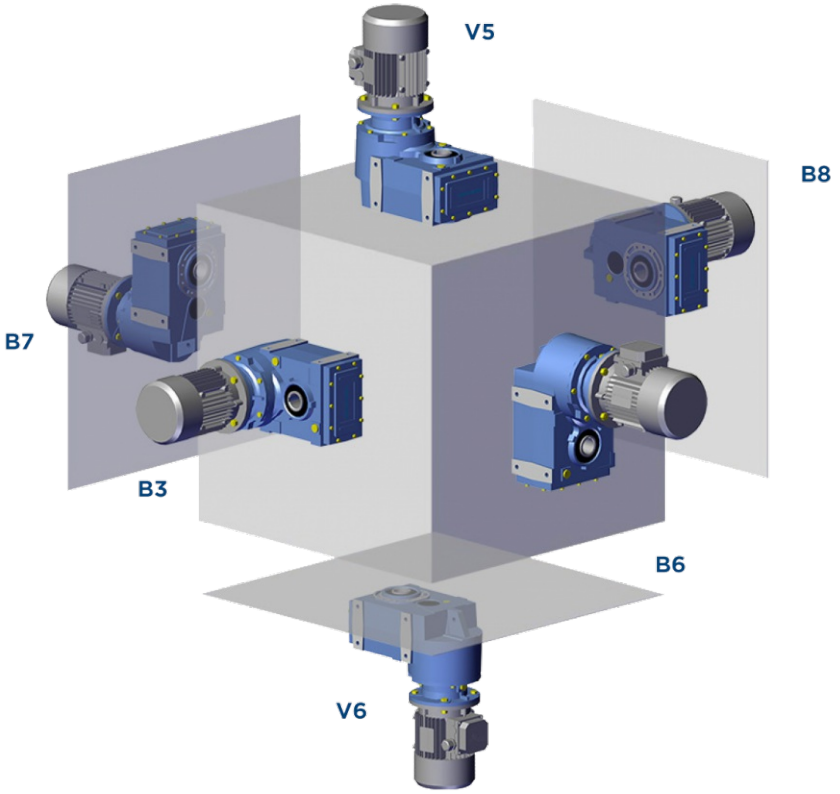

2.3.2 Position of terminal box

Unless otherwise specified when ordering, the gear reducer is supplied with terminal box in position 1.

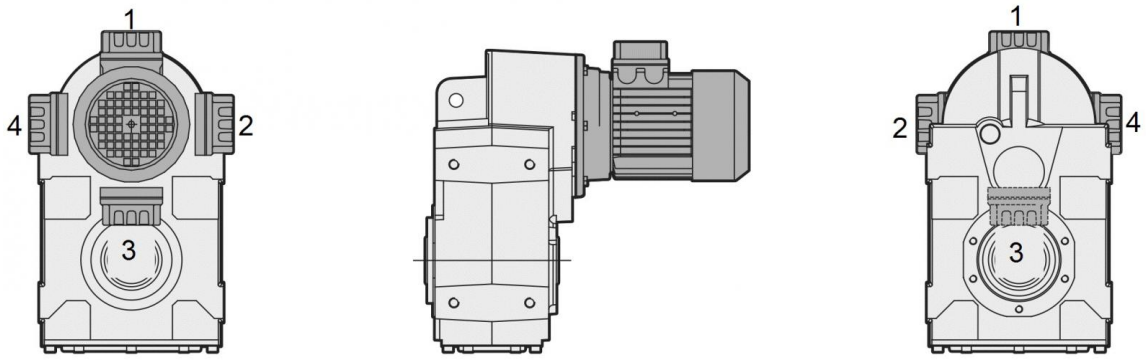

2.4 THERMAL POWER

2.4.1 Information

The scheme below indicates the nominal thermal power Pth capacity [HP] according to the following conditions:

- mounting position B3
- continuous operation at input speed <= 1800 rpm
- environment temperature 77°F
- sea level altitude
- air speed around the gear reducer >=38ips
- absence of external radial and/or axial loads

n_1 = 1,750rpm	
	Pth [HP]
S052	7,5
S062	11
S082	20
S102	26
S122	40
S142	60
S152	70

A correct lubrication and a proper running condition of the gearbox are guaranteed only applying an input power not exceeding Pth (at the above reference conditions) (T oil max=203°F).

NOTE: Normally, three stages gearboxes do not require thermal power verification because the thermal rating usually exceed the mechanical one.

2.4.2 Verification

Application check

Except for continuous operating times below two (2) hours and successive pauses capable of bringing the gear reducer back to ambient temperature, for each application it is advisable to verify the gear reducer's thermal limit according to the following formula: **P_1 < Pth * Fc * Fv*Fa,** where:

- P_1 = input power to the gear reducer
- Pth = thermal power at the reference conditions (see above table)
- Fc = ambient and operating temperature correction factor
- Fv = ventilation correction factor
- Fa = altitude correction factor

The correction factors refer to different operating conditions compared to the reference conditions, and are provided by the following ISO14179 tables:

		Duty per hour of operation %				
	Fc	100	80	70	40	20
Ambient temperature °F	13,4	1,15	1,21	1,32	1,55	2,07
	24,1	1,07	1,12	1,23	1,44	1,93
	33,5	1,00	1,05	1,15	1,35	1,80
	40,2	0,93	0,98	1,07	1,26	1,67
	53,6	0,83	0,87	0,95	1,12	1,49
	57,7	0,75	0,79	0,86	1,01	1,35
	67,1	0,67	0,70	0,77	0,90	1,21

Altitude correction factor	Fa
0*	1
2460	0,95
4921	0,9
7382	0,85
9843	0,81

Ventilation correction factor	Fv
Stagnant air (<1,12 mph)	0.75
Indoor installation with slight ventilation	1
Indoor installation with good ventilation (>3,13 mph)	1.4
Installazione all'aperto (>8,3 mph)	1.9

*Sea level (ft)

In case of operation at input speeds exceeding 2000 rpm, or ambient temperatures greater than 104°F, it is advisable to contact out technical department.

2.5 CRITICAL APPLICATIONS

2.5.1 Critical applications

S	050	060	080	100	125	140	150
2000 < n1 < 3000	✔	✔	✔	✔	✔	B	B
V6	B	B	B	B	B	B	B
n1 > 3000	B	B	B	B	B	A	A
...L : V5 - V6	B	B	B	B	B	B	B
(*) ...L	B	B	B	B	B	B	B

✔ Verified application
A Application not recommended
B Check the application and/or call our technical service

(*) The shrink disc is designed only to transmit the output torque.
In case of mounting position with radial and/or axial loads, please contact the technical support.

2.5.2 Information

The performance given in the catalogue correspond to mounting position B3 or similar, when the first stage is not entirely immersed in oil. For other mounting positions and/or particular input speeds, refer to the tables that highlight different critical situations for each size of gear reducer. It is also necessary to take due consideration of and carefully assess the following applications by calling our Technical Service:

- To avoid the use as multiplier.
- Use in services that could be hazardous for people if the gear reducer fails.
- Applications with especially high inertia.
- Use as a lifting winch.
- Applications with high dynamic strain on the case of the gear reducer.
- In places with T_{amb} under 23°F °C or over 104°F.
- Use in chemically aggressive environments.
- Use in a salty environment.
- Mounting positions not envisaged in the catalogue.
- Use in radioactive environments.
- Use in environments pressures other than atmospheric pressure.

Avoid applications where even partial immersion of the reducer is required.
In the presence of overloading due to full load, braking, shocks or other static and dynamic causes, please verify that the peak torque is less than $2*Mn_2$.

2.6 MOTOR FLANGE AVAILABILITY

These tables report all possible dimensions. Please verify service factor.

PS 052			
i	56C	140TC	180TC
8,63	•	•	•
11,14	•	•	•
12,00	•	•	•
13,66	•	•	•
15,27	•	•	•
16,29	•	•	•
18,63	•	•	•
19,73	•	•	•
21,04	•	•	•
21,53	•	•	•
24,07	•	•	•
25,20	•	•	•
25,79	•	•	•
27,81	•	•	•
30,00	•	•	
32,55	•	•	•
33,00	•	•	
34,09	•	•	
36,55	•	•	
38,75	•	•	
39,90	•	•	•
42,63	•	•	
46,00	•	•	
47,20	•	•	
52,25	•	•	
57,86	•	•	
59,42	•	•	
72,83	•	•	

PS 053		
i	56C	140TC
36,50	•	•
47,14	•	•
57,79	•	•
63,74	•	•
78,14	•	•
74,20	•	•
95,84	•	•
117,48	•	•
137,45	•	•
177,55	•	•
198,45	•	
217,64	•	•
256,33	•	
314,21	•	

PS 062			
i	56C	140TC	180TC
8,00	•	•	•
8,92	•	•	•
9,55	•	•	•
10,65	•	•	•
11,71	•	•	•
13,06	•	•	•
13,36	•	•	•
15,94	•	•	•
16,16	•	•	•
19,29	•	•	•
19,55	•	•	•
23,18	•	•	•
23,75	•	•	•
25,14	•	•	•
27,66	•	•	•
30,00	•	•	•
33,93	•	•	•
36,57	•	•	•
39,38	•	•	•
43,64	•	•	•
46,10	•	•	
48,30	•	•	
53,53	•	•	•
55,00	•	•	
67,47	•	•	

PS 063		
i	56C	140TC
33,57	•	•
37,77	•	•
40,05	•	•
49,13	•	•
55,29	•	•
58,72	•	•
65,85	•	•
68,25	•	•
73,63	•	•
81,43	•	•
99,89	•	•
126,43	•	•
150,85	•	•
182,53	•	•
185,05	•	•
217,79	•	
267,16	•	

2.6 MOTOR FLANGE AVAILABILITY

PS 082				
i	56C	140TC	180TC	210TC
7,34	•	•	•	•
8,06	•	•	•	•
9,94	•	•	•	•
11,61	•	•	•	•
12,75	•	•	•	•
14,04	•	•	•	•
15,43	•	•	•	•
15,73	•	•	•	•
17,29	•	•	•	•
19,03	•	•	•	•
20,14	•	•	•	•
22,13	•	•	•	•
24,00	•	•	•	•
26,05	•	•	•	•
27,29	•	•	•	•
28,67	•	•	•	•
29,60	•	•	•	•
31,78	•	•	•	•
34,91	•	•	•	•
35,50	•	•	•	
40,05	•	•	•	•
43,05	•	•	•	•
50,25	•	•	•	
54,27	•	•	•	
61,98	•	•	•	

PS 083			
i	56C	140TC	180TC
67,52	•	•	•
74,18	•	•	•
81,71	•	•	•
91,49	•	•	•
100,62	•	•	•
117,17	•	•	
128,73	•	•	
136,34	•	•	
158,76	•	•	
184,88	•	•	
203,11	•	•	
205,34	•	•	
226,04	•	•	
250,50	•	•	
266,13	•	•	
292,36	•	•	
315,73	•	•	
360,58	•	•	

PS 102					
i	56C	140TC	180TC	210TC	250TC
8,06				•	•
8,85				•	•
10,88				•	•
12,75				•	•
13,99				•	•
15,43				•	•
17,21				•	•
19,00	•	•	•	•	•
20,83	•	•	•	•	•
22,13	•	•	•	•	•
24,28	•	•	•	•	•
26,33	•	•	•	•	•
29,87	•	•	•	•	•
32,40	•	•	•	•	•
34,91	•	•	•	•	•
38,30	•	•	•	•	•
42,53	•	•	•	•	•
44,00	•	•	•		
47,13	•	•	•	•	•
50,25	•	•	•		
55,14	•	•	•		
59,40	•	•	•		
67,84	•	•	•		

PS 103			
i	56C	140TC	180TC
74,18	•	•	•
81,39	•	•	•
89,77	•	•	•
100,15	•	•	•
110,55	•	•	•
121,29	•	•	•
128,73	•	•	•
141,24	•	•	•
173,78	•	•	•
188,51	•	•	•
203,11	•	•	•
222,85	•	•	•
224,76	•	•	•
274,20	•	•	•
280,89	•	•	
292,36	•	•	
320,79	•	•	
345,60	•	•	
394,69	•	•	

2.6 MOTOR FLANGE AVAILABILITY

PS 122						
i	140TC	180TC	210TC	250TC	280TC	320TC
8,48			•	•	•	•
9,30			•	•	•	•
10,24			•	•	•	•
11,42			•	•	•	•
12,63			•	•	•	•
13,84			•	•	•	•
16,99			•	•	•	•
21,25		•	•	•	•	
22,37		•	•	•	•	
23,29		•	•	•	•	
26,15		•	•	•	•	
28,60		•	•	•	•	
30,51		•	•	•	•	
32,76		•	•	•	•	
33,44		•	•	•	•	
35,20		•	•	•	•	
41,07		•	•	•	•	
43,60	•	•	•	•		
44,63	•	•	•	•		
49,04	•	•	•	•		
53,75	•	•	•	•		
66,00	•	•	•	•		

PS 123					
i	140TC	180TC	210TC	250TC	280TC
64,84		•	•	•	•
71,07		•	•	•	•
78,46		•	•	•	•
87,27		•	•	•	•
105,91	•	•	•	•	
112,52	•	•	•	•	
123,33	•	•	•	•	
130,04	•	•	•	•	
133,78	•	•	•	•	
151,43	•	•	•	•	
177,53	•	•	•	•	
194,59	•	•	•	•	
215,60	•	•	•	•	
238,93	•	•	•	•	
255,54	•	•			
280,10	•	•			
301,16	•	•			
343,93	•	•			

S142				
i	210TC	250TC	280TC	320TC
4.11	•	•	•	•
4.58	•	•	•	•
5.14	•	•	•	•
5.81	•	•	•	•
6.21	•	•	•	•
7.31	•	•	•	•
8.20	•	•	•	•
9.28	•	•	•	•
9.91	•	•	•	•
11.40	•	•	•	•
12.81	•	•	•	•
14.27	•	•	•	•
16.00	•	•	•	•
18.10	•	•	•	•
19.33	•	•	•	•
22.24	•	•	•	•
25.26	•	•	•	
28.33	•	•	•	
32.05	•	•	•	
34.22	•	•	•	
39.37	•	•	•	

S143			
i	180TC	210TC	250TC
45.76	•	•	•
50.97	•	•	•
57.17	•	•	•
64.67	•	•	•
69.05	•	•	•
79.45	•	•	•
98.80	•	•	
110.05	•	•	
123.43	•	•	
139.64	•	•	
149.09	•	•	
157.48	•		
171.54	•	•	
175.40	•		
196.73	•		
222.56	•		
237.62	•		
273.41	•		

2.6 MOTOR FLANGE AVAILABILITY

S152				
i	250TC	280TC	320TC	360TC
4.06	•	•	•	•
4.53	•	•	•	•
5.20	•	•	•	•
5.71	•	•	•	•
6.52	•	•	•	•
7.28	•	•	•	•
8.35	•	•	•	•
9.17	•	•	•	•
10.41	•	•	•	•
12.46	•	•	•	•
13.90	•	•	•	•
15.96	•	•	•	•
17.52	•	•	•	•
19.90	•	•	•	•
22.88	•	•	•	•
27.10	•	•	•	•
29.75	•	•	•	•
33.79	•	•	•	•
38.84	•	•	•	•

PS 153			
i	210TC	250TC	280TC
40.10	•	•	•
44.75	•	•	•
51.37	•	•	•
56.39	•	•	•
64.05	•	•	•
73.62	•	•	•
87.16	•	•	
97.27	•	•	
111.66	•	•	
122.56	•	•	
139.20	•	•	
154.01	•		
160.01	•		
176.81	•		
194.05	•		
220.41	•		
253.35	•		

2.7 OUTPUT SHAFT BEARINGS

S	S050		S060		S080		S100	
Versions	Standard	On request	Standard	On request	Standard	On request	Standard	On request
C	1	/	1	2	1 (Ø40)	2 (Ø40)	1	2
						1 (Ø45)		
D	1	/	1	/	2	/	2	/
L	1	/	1	/	1	/	1	/

S	S125		S140		S150	
Versions	Standard	On request	Standard	On request	Standard	On request
C	1	2	1	2	1	2
D	2	/	2	/	2	/
L	1	/	1	/	1	/

1 - Ball Bearing

2 - Roller bearings

/ - Not available

2.8 OVERHUNG LOAD

2.8.1 Information

The value of the admissible radial load [lb] is given in the tables relating to the performance of the gear reducer at issue. It is related to the load applied on the centre line of the shaft and in the most unfavourable conditions of angle of application and direction of rotation. The maximum admissible axial loads are 1/5 of the value of the given radial load when they are applied in combination with the radial load. The tables relating to the output shafts give the maximum admissible value. This value must never be exceeded since it relates to the strength of the case. Particular conditions of radial load higher than the limits of the catalogue may occur. In this case, call our Technical Sevice and provide details on the application: direction of the load, direction of rotation of the shaft, type of service. In case of double extension shafts with radial load applied on both ends, the max. admissible radial loads must be defined according to the specific running conditions, in this case call our Technical Service.

The radial load on the shaft is calculated with the following formula: **Fre=(2*M*fz)/D≤Fr1 or Fr2**

- **Fre** [lb] Resulting radial load
- **M** [lb-in] Torque on the shaft
- **D** [in] Diameter of the transmission member mounted on the shaft
- **Fr1-Fr2** [lb] Value of the maximum admitted radial load (see relative tables)
- **fz** = 1,1 gear pinion - 1,4 chain wheel - 1,7 v-pulley - 2,5 flat pulley

2.8.2 Input

When the radial load is not on the centre line of the shaft, it is necessary to adjust the admissible radial load Fr1 with the following formula: **Frx=(Fr1*a)/(b+x)**

- **a** , **b** = values given in the tables
- **x** = distance from the point of application of the load to the shaft shoulder

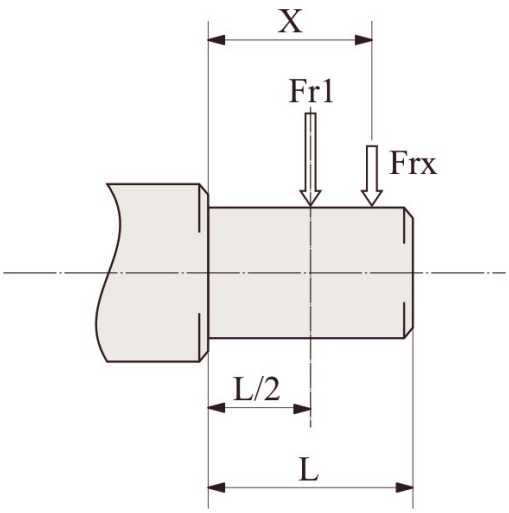

IS	052/053	062/063	082/083	102/103	122/123	142/143	152/153
a	4,13	4,13	5,39	5,39	6,89	6	7
b	3,15	3,15	4,25	4,25	5,31	4	5
Fr1 max(**)	337	562	809	809	1619	944	1169

(**Fr1 max) Max admissible value of the reducer in static conditions and/or for limited operations. For continuous overhung loads please check the values on the performances tables calculated according to the casing, the shaft and bearings.

2.8.3 Output

When the radial load is not on the centre line of the shaft, it is necessary to adjust the admissible radial load Fr2 with the following formula: **Frx=(Fr2*a)/(b+x)**

- **a** , **b** = values given in the tables
- **x** = distance from the point of application of the load to the shaft shoulder

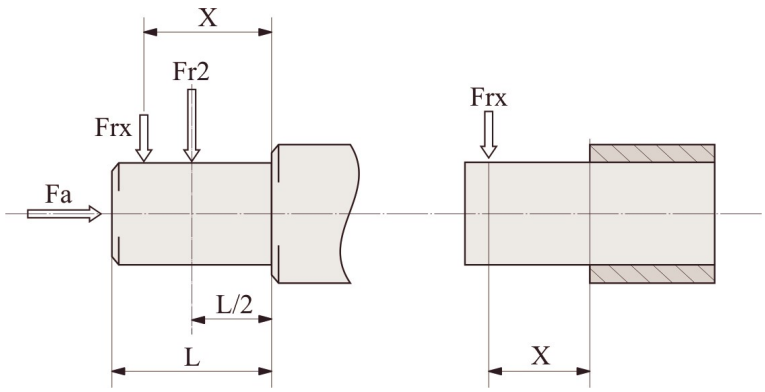

S	052/053	062/063	082/083	102/103	122/123	142/143	152/153
a	4,92	5,71	7,48	8,86	10,43	14,19	16,12
b	3,78	4,57	5,91	6,89	7,95	10,28	11,77
D (Fr2 max**)	1349	2248	4047	4946	6744	7868	8992
C (Fr2 max**)	1349	899	1619	2023	2518	4159	4361

(**Fr2 max) Max admissible value of the reducer in static conditions and/or for limited operations. For continuous overhung loads please check the values on the performances tables calculated according to the casing, the shaft and bearings.

2.9 LUBRICATION

2.9.1 Information

In cases of ambient temperatures not envisaged in the table, call our Technical Service. In the case of temperatures under -22°F or over 140°F it is necessary to use oil seals with special properties.
For operating ranges with temperatures under 32°F it is necessary to consider the following:

1. The motors need to be suitable for operation at the envisaged ambient temperature.
2. The power of the electric motor needs to be adequate for exceeding the higher starting torques required.
3. In case of cast-iron gear reducers, pay attention to impact loads since cast iron may have problems of fragility at temperatures under 5°F.
4. During the early stages of service, problems of lubrication may arise due to the high level of viscosity taken on by the oil and so it is wise to have a few minutes of rotation under no load.

Oil must be changed after approx. 10000 hours/2 years of operation; this time varies based on the type of service and on the environment inside which the gear reducer is installed. Units not featuring any oil plug are life-lubricated, and therefore maintenance-free.

2.9.2 Lubricants

Specifications of lubricants recommended by Motovario.
The units **S052/3 ÷ 122/3** are supplied with ENI BLASIA 220 oil, unless otherwise specified by the client.
The units **S142/3 ÷ 152/3** are supplied without lubricant.

	S052/3 ÷ 152/3	
	Mineral oil	
T_{amb}°F ISO/SAE	(+23) ÷ (+104) ISO VG220	(+5) ÷ (+77) ISO VG150
ENI	BLASIA 220	BLASIA 150
SHELL	OMALA S2 G 220	OMALA S2 G 150
KLUBER	Kluberoil GEM 1-220N	Kluberoil GEM 1-150N
MOBIL	MOBILGEAR 600 XP220	MOBILGEAR 600 XP150
CASTROL	ALPHA SP 220	ALPHA SP 150
BP	ENERGOL GR-XP220	ENERGOL GR-XP150

2.9.3 Special lubricants

	T_{amb}°F	Polyglicol synthetic oil
ENI	(-22) ÷ (+86)	Blasia S 150 (ISO VG150)
	(-4) ÷ (+104)	Blasia S 220 (ISO VG220)
MOBIL	(-49) ÷ (+32)	SCH 624 (ISO VG32)
	(-40) ÷ (+41)	SCH 626 (ISO VG68)
KLUBER	(-40) ÷ (+41)	Klubersynth GH 6-32 (ISO VG32)
	(-31) ÷ 50)	Klubersynth GH 6-80 (ISO VG80)
	(-22) ÷ (+104)	Klubersynth GH 6-150 (ISO VG150)
	(-13) ÷ (+104)	Klubersynth GH 6-220 (ISO VG220)
	(+5) ÷ (+122)	Klubersynth GH 6-460 (ISO VG460)
	(+14 ÷ (+158)	Klubersynth GH 6-680 (ISO VG680)

	T_{amb}°F	Polyglicol synthetic oil for food grade
KLUBER	(-22) ÷ (+59)	Klubersynth UH1-6 100 (ISO VG100)
	(-13) ÷ (+104)	Klubersynth UH1-6 220 (ISO VG220)
	(+5) ÷ (+104)	Klubersynth UH1-6 320 (ISO VG320)
	(+5) ÷ (+122)	Klubersynth UH1-6 460 (ISO VG460)
	(+14) ÷ (+122)	Klubersynth UH1-6 680 (ISO VG680)

If ‘special’ lubricant is required please contact for Technical Assistance.

2.9.4 Quantity

- For the gear reducers S ... series with 2, 3 stages it is always necessary to specify the envisaged position.
- S050,S060 gear reducers are supplied complete with lubricant, have no oil plugs and need no maintenance.
- S080,S100,S125 gear reducers are supplied complete with lubricant and are fitted with oil plugs to suit any mounting position included in the catalogue.
- S140,150 gear reducers are supplied without lubricant.

Oil quantity in the table (litres ~) are indicative; for a proper use you will have to refer to the level plug or the dipstick. Any level difference could depend on construction tolerances, but also by the placement of the unit or by the mounting surface at the customer's premises. It is appropriate to check and, if necessary, restores the level when the units are installed.

S - CS	052/053	062/063	082/083	102/103	122/123	142	143	152	153
B3	2,05	2,4	6	9	14,7	22	20	29,7	27
B8	1,8	2,3	4	6	11,8	20	20	31	31
B6	2,4	2,9	5,7	8	16	22 (25)	18 (24,5)	29,3 (42)	24 (40)
B7	2,1	2,6	4,5	6,8	11,3	17,5	14	22,5	18
V5	2,8	3,5	6,8	10,3	19	24,5	23,5	34,4	33
V6	2,4	2,9	6,4	9,9	18	20,8	20	33,3	32

(...) 142-143-152-153 quantity of oil [l] for gearbox with backstop device

2.10 MOMENTS OF INERTIA

The following values of J1 moment of inertia are only estimated, referred to the maximum calculated, and to the gearbox input side.

S-2/3	J_1 [Kg*m2]	J_1 [lb*in2]
052/053	0,0004	1,3669
062/063	0,0006	2,0503
082/083	0,0015	5,1258
102/103	0,0034	11,6184
122/123	0,0085	29,0460
142/143	0,0384	131,2194
152/153	0,0830	283,6253

3.1.1 S 052...123

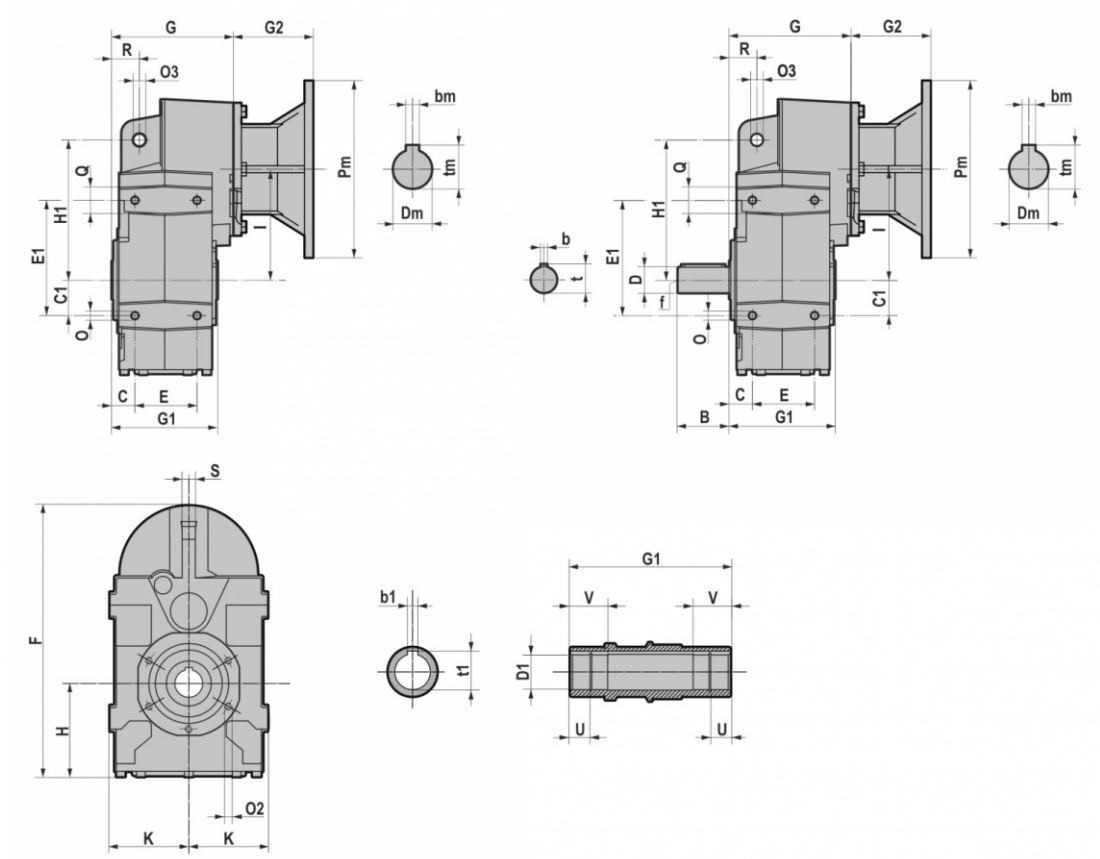

	D1 +0,001/0	b1	t1	U	V	B	D	b	t	f	C	C1	E	E1
S052/S053	1,25	0	1,4	/	1	2,4	1,25 0/-0,0005	0	1,4	1/2-13	1	1,6	2,8	5,1
S062/S063	1,38	0	1,5	0,47	1	2,8	1,375 0/-0,0005	0	1,5	1/2-13	1,2	1,8	3,2	5,8
S082/S083	1,5	0	1,7	/	2	3,2	1,625 0/-0,001	0	1,8	5/8-11	1,5	2,4	4,2	7,5
S102/S103	2	1	2,2	/	2	3,9	2 0/-0,001	1	2,2	3/4-10	1,4	2,8	5,4	11
S122/S123	2,38	1	2,7	/	3	4,7	2,375 0/-0,001	1	2,7	3/4-10	1,7	3,9	6,5	12

	F	G	G1	H	H1	I	K	O	O3	O2	Q	R	S
S052/S053	12,24	5,41	4,72	4,21	6,22	4,92	3,56	M10x18	0,55	M8x16 (n°5)	1,18	1,24	0,59
S062/S063	12,6	6,24	5,51	3,82	6,69	5,63	3,8	M12x20	0,55	M8x16 (n°5)	1,57	1,26	0,59
S082/S083	15,08	8,15	7,09	4,21	8,58	6,69	4,43	M12x20	0,55	M10x20 (n°7)	1,73	1,61	0,79
S102/S103	16,77	8,56	8,27	4,69	10,94	7,09	5,12	M16x26	0,87	M12x22 (n°7)	1,97	1,97	0,79
S122/S123	21,61	10,12	9,45	6,18	13,62	9,25	6,5	M16x30	0,87	M14x28 (n°7)	1,97	2,44	1,02

		G2		
NEMA	Pm x Dm	S052/S053 S062/S063	S082/S083 S102/S103	S122/S123
56C	6,5"x0,625"	3,74	2,95	/
140TC	6,5"x0,875"	3,74	2,95	2,58
180TC	9"x1,125"	4,33	3,54	3,17
210TC	9"x1,375"	/	6,02	5,65
250TC	9"x1,625"	/	6,02	5,65
320TC	11"x1,875"	/	/	6,89
360TC	13,375"x2,125"	/	/	7,03

NEMA	Pm	Dm	tm	bm
56C	6,69	0,625	0,71	0,1875
140TC	6,69	0,875	0,97	0,1875
180TC	9,06	1,125	1,24	0,2500
210TC	9,06	1,375	1,52	0,3125
250TC	9,06	1,625	1,80	0,3750
280TC	11,02	1,875	2,10	0,5000
320TC	13,39	2,125	2,35	0,5000
360TC	13,39	2,375	2,65	0,6250

3.1.2 S 142...153

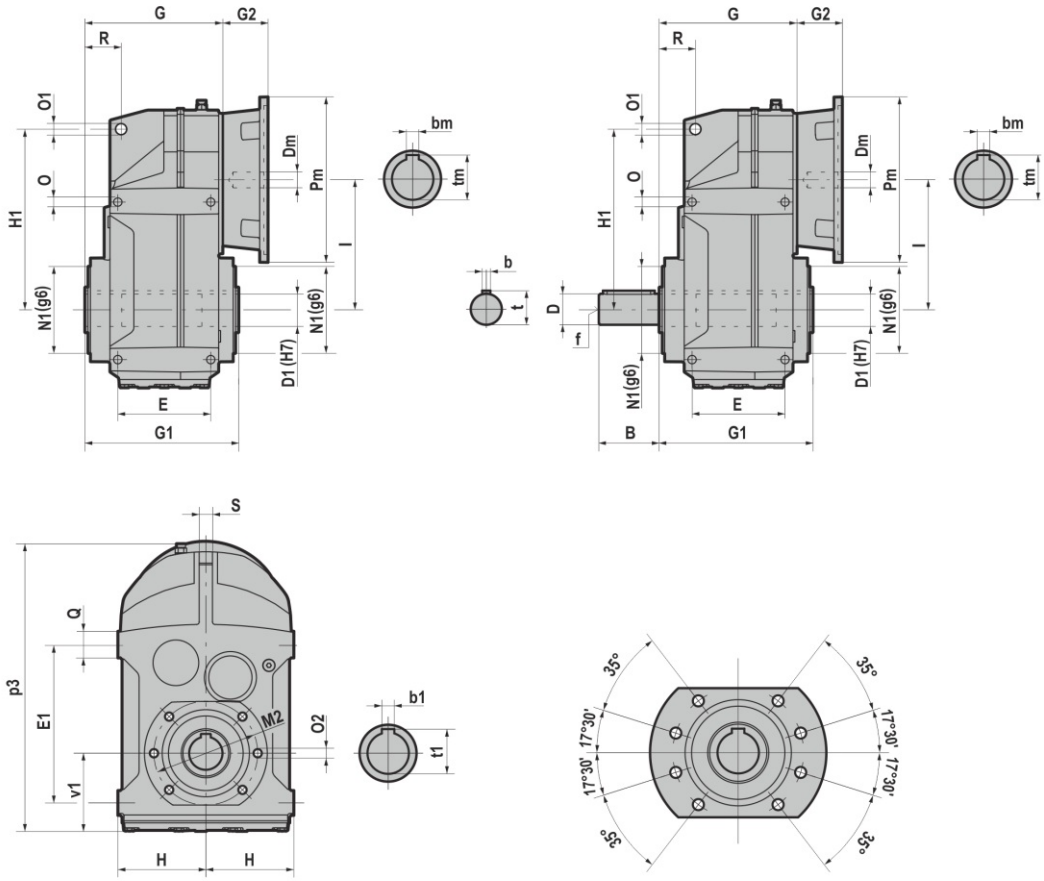

	D1	b1	t1	B	D	b	t	f	E	E1	G	G1
S142/S143	2,76	0,79	2,95	5,51	2,875	0,75	3,2	3/4-10UNC	8,07	13,78	11,1	11,81
	2,56	0,71	2,73									
S152/S153	3,54	0,98	3,76	5,51	2,875	0,75	3,2	3/4-10UNC	8,66	15,75	12,66	13,78
	3,15	0,87	3,36	6,69	3,625	0,875	4,01	1-8UNC				

	H	H1	l	N1	M2	O	O1	O2	p3	Q	R	S	v1
S142/S143	7,87	15,55	10,59	7,09	8,66	M20x28	1,02	M16x26	24,21	1,97	2,76	1,18	6,97
S152/S153	8,86	19,09	12,8	8,27	10,24	M24x36	1,02	M20x30	28,74	2,36	3,46	1,42	8,39

		G2	
NEMA	Pm x Dm	S142/S143	S152/S153
180TC	9"x1,125"	3,50	/
210TC	9"x1,375"	3,50	4,57
250TC	9"x1,625"	4,86	4,57
280TC	11"x1,875"	4,86	4,57
320TC	13,375"x2,125"	5,53	5,89
360TC	13,375"x2,375"	/	5,89

NEMA	Pm	Dm	tm	bm
180TC	9,06	1,125	1,24	0,2500
210TC	9,06	1,375	1,52	0,3125
250TC	9,06	1,625	1,80	0,3750
280TC	11,02	1,875	2,10	0,5000
320TC	13,39	2,125	2,35	0,5000
360TC	13,39	2,375	2,65	0,6250

3.1.3 CS 052...123

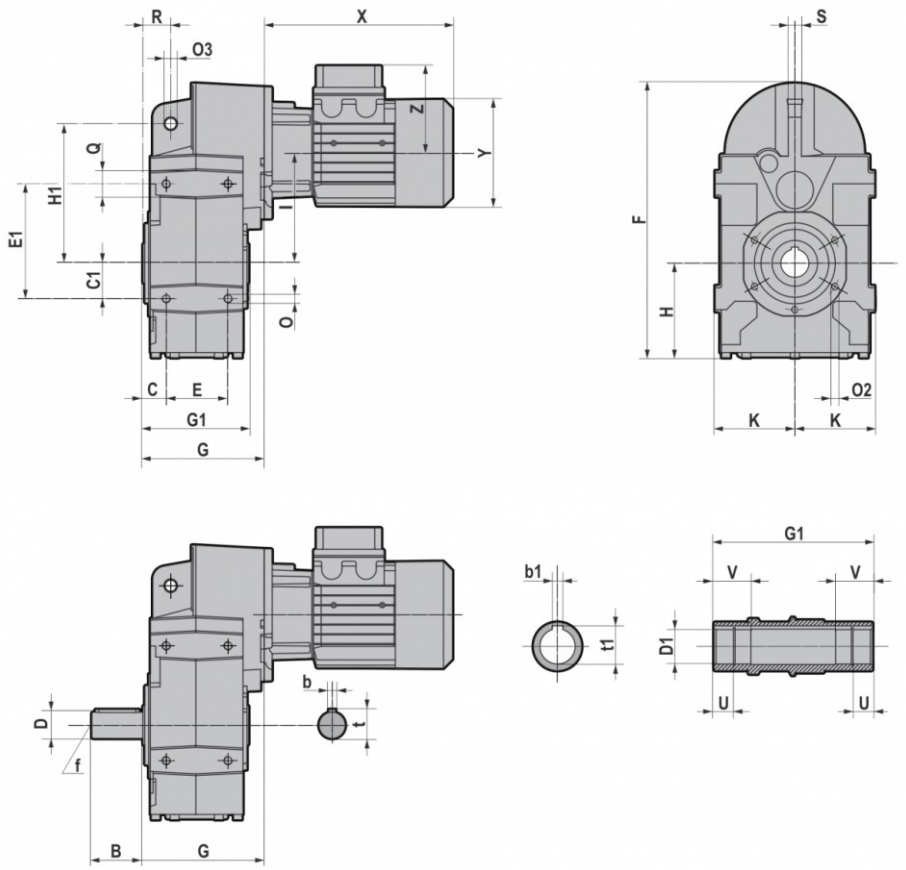

	D1 +0,001/0	b1	t1	U	V	B	D	b	t	f	C	C1	E	E1
CS052/CS053	1,25	0	1,4	/	1	2,4	1,25 0/-0,0005	0	1,4	1/2-13	1	1,6	2,8	5,1
CS062/CS063	1,38	0	1,5	0,47	1	2,8	1,375 0/-0,0005	0	1,5	1/2-13	1,2	1,8	3,2	5,8
CS082/CS083	1,5	0	1,7	/	2	3,2	1,625 0/-0,001	0	1,8	5/8-11	1,5	2,4	4,2	7,5
CS102/CS103	2	1	2,2	/	2	3,9	2 0/-0,001	1	2,2	3/4-10	1,4	2,8	5,4	11
CS122/CS123	2,38	1	2,7	/	3	4,7	2,375 0/-0,001	1	2,7	3/4-10	1,7	3,9	6,5	12

	F	G	G1	H	H1	I	K	O	O3	O2	Q	R	S
CS052/CS053	12,24	5,41	4,72	4,21	6,22	4,92	3,56	M10x18	0,55	M8x16 (n°5)	1,18	1,24	0,59
CS062/CS063	12,6	6,24	5,51	3,82	6,69	5,63	3,8	M12x20	0,55	M8x16 (n°5)	1,57	1,26	0,59
CS082/CS083	15,08	8,15	7,09	4,21	8,58	6,69	4,43	M12x20	0,55	M10x20 (n°7)	1,73	1,61	0,79
CS102/CS103	16,77	8,56	8,27	4,69	10,94	7,09	5,12	M16x26	0,87	M12x22 (n°7)	1,97	1,97	0,79
CS122/CS123	21,61	10,12	9,45	6,18	13,62	9,25	6,5	M16x30	0,87	M14x28 (n°7)	1,97	2,44	1,02

T (IE1 - IE2)										
		063	071	080	090S	090L	100	112	132S	132M/L
CS052/CS053 CS062/CS063	X	8,5	9,5	10,5	11,6	12,6	13,1	13,8	/	/
	Y	4,8	5,5	6,2	6,8	6,8	7,5	8,3	/	/
	Z	4,1	4,4	4,8	5,1	5,1	5,5	6,1	/	/
CS082/CS083 CS102/CS103	X	/	8,7	9,8	10,9	11,8	13,2	14	15,9	17,4
	Y	/	5,5	6,2	6,8	6,8	7,5	8,3	9,8	9,8
	Z	/	4,4	4,8	5,1	5,1	5,5	6,1	7,6	7,6
CS122/CS123	X	/	/	/	10,5	11,5	12,8	13,7	15,6	17,1
	Y	/	/	/	6,8	6,8	7,5	8,3	9,8	9,8
	Z	/	/	/	5,1	5,1	5,5	6,1	7,6	7,6

TB (IE1 - IE2)										
		063	071	080	090S	090L	100	112	132S	132M/L
CS052/CS053 CS062/CS063	X	10,7	12,1	13,4	14,7	15,7	16,3	17,6	/	/
	Y	4,8	5,5	6,2	6,8	6,8	7,5	8,3	/	/
	Z	4,7	5,1	5,4	6,2	6,2	6,6	7,2	/	/
CS082/CS083 CS102/CS103	X	/	11,3	12,6	13,9	14,9	16,4	17,8	19,9	21,5
	Y	/	5,5	6,2	6,8	6,8	7,5	8,3	9,8	9,8
	Z	/	5,1	5,4	6,2	6,2	6,6	7,2	9,1	9,1
CS122/CS123	X	/	/	/	13,5	14,5	16	17,4	19,5	21,1
	Y	/	/	/	6,8	6,8	7,5	8,3	9,8	9,8
	Z	/	/	/	6,2	6,9	6,6	7,2	9,1	9,1

3.1.4 IS 052...123

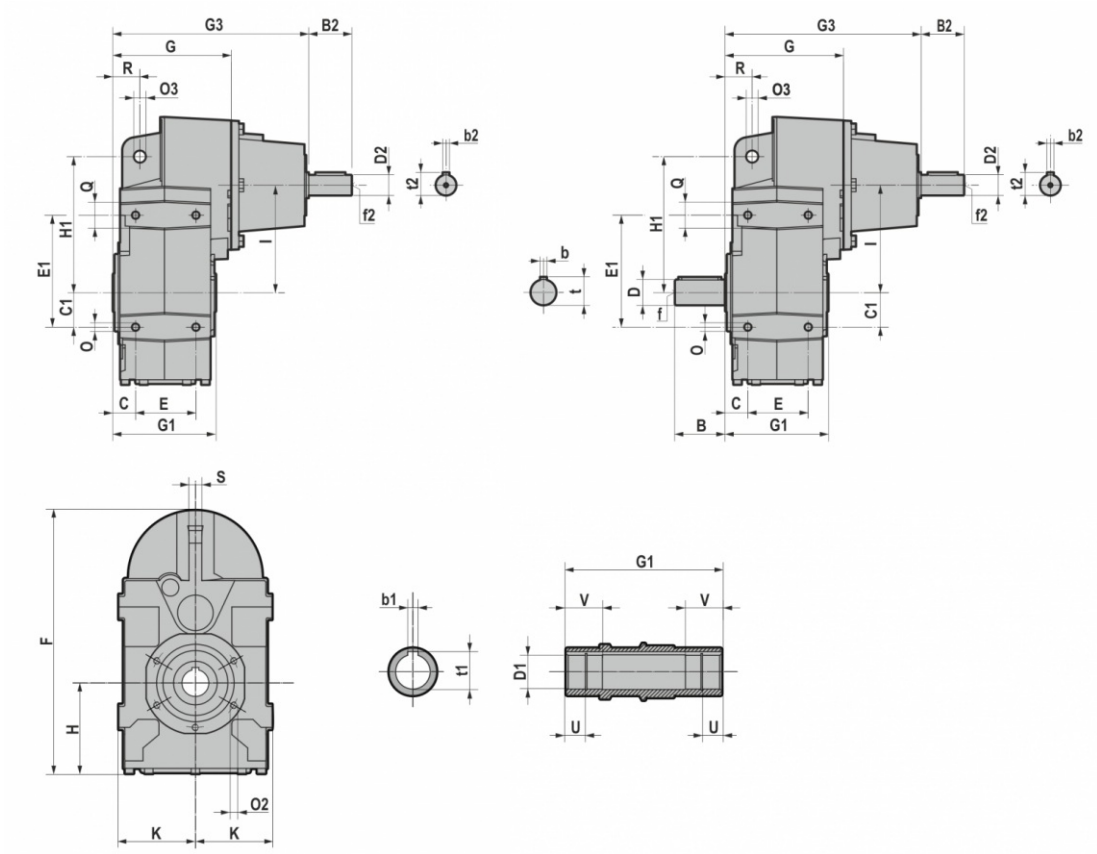

	D1 +0,001/0	b1	t1	U	V	B	D	b	t	f	C	C1	E	E1
IS052/IS053	1,25	0	1,4	/	1	2,4	1,25 0/-0,0005	0	1,4	1/2-13	1	1,6	2,8	5,1
IS062/IS063	1,38	0	1,5	0,47	1	2,8	1,375 0/-0,0005	0	1,5	1/2-13	1,2	1,8	3,2	5,8
IS082/IS083	1,5	0	1,7	/	2	3,2	1,625 0/-0,001	0	1,8	5/8-11	1,5	2,4	4,2	7,5
IS102/IS103	2	1	2,2	/	2	3,9	2 0/-0,001	1	2,2	3/4-10	1,4	2,8	5,4	11
IS122/IS123	2,38	1	2,7	/	3	4,7	2,375 0/-0,001	1	2,7	3/4-10	1,7	3,9	6,5	12

	F	G	G1	H	H1	I	K	O	O3	O2	Q	R	S
IS052/IS053	12,24	5,41	4,72	4,21	6,22	4,92	3,56	M10x18	0,55	M8x16 (n°5)	1,18	1,24	0,59
IS062/IS063	12,6	6,24	5,51	3,82	6,69	5,63	3,8	M12x20	0,55	M8x16 (n°5)	1,57	1,26	0,59
IS082/IS083	15,08	8,15	7,09	4,21	8,58	6,69	4,43	M12x20	0,55	M10x20 (n°7)	1,73	1,61	0,79
IS102/IS103	16,77	8,56	8,27	4,69	10,94	7,09	5,12	M16x26	0,87	M12x22 (n°7)	1,97	1,97	0,79
IS122/IS123	21,61	10,12	9,45	6,18	13,62	9,25	6,5	M16x30	0,87	M14x28 (n°7)	1,97	2,44	1,02

	G3	B2	D2	b2	t2	f2
IS052/IS053	8,96	1,97	0,875 0/-0,0005	0,19	0,96	1/4-20
IS062/IS063	9,78	1,97	0,875 0/-0,0005	0,19	0,96	1/4-20
IS082/IS083	12,60	2,76	1,375 0/-0,0005	0,31	1,51	1/2-13
IS102/IS103	13,01	2,76	1,375 0/-0,0005	0,31	1,51	1/2-13
IS122/IS123	15,10	3,15	1,625 0/-0,001	0,38	1,79	5/8-11

3.1.5 IS 142...153

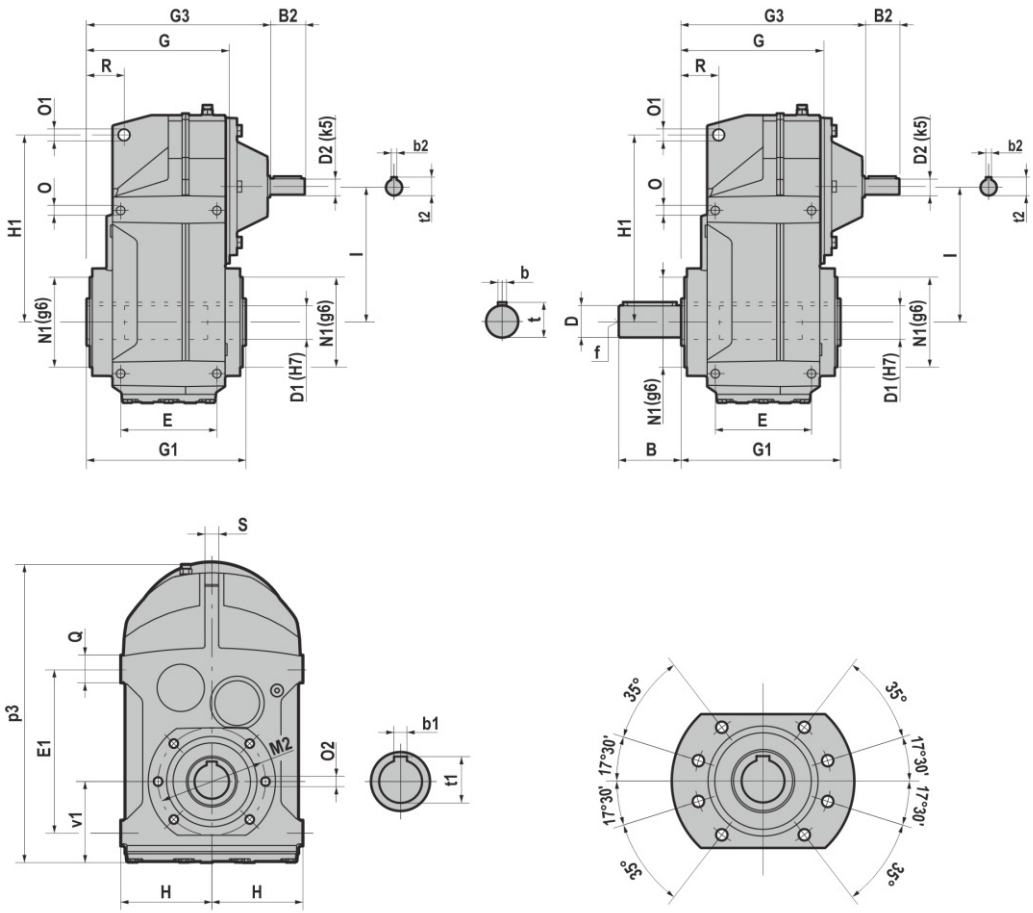

	D1	b1	t1	B	D	b	t	f	E	E1	G	G1
IS142/IS143	2,76	0,79	2,95	5,51	2,875	0,75	3,2	3/4-10UNC	8,07	13,78	11,1	11,81
	2,56	0,71	2,73									
IS152/IS153	3,54	0,98	3,76	5,51	2,875	0,75	3,2	3/4-10UNC	8,66	15,75	12,66	13,78
	3,15	0,87	3,36	6,69	3,625	0,875	4,01	1-8UNC				

	H	H1	I	N1	M2	O	O1	O2	p3	Q	R	S	v1
IS142/IS143	7,87	15,55	10,59	7,09	8,66	M20x28	1,02	M16x26	24,21	1,97	2,76	1,18	6,97
IS152/IS153	8,86	19,09	12,8	8,27	10,24	M24x36	1,02	M20x30	28,74	2,36	3,46	1,42	8,39

	G3	D2	B2	b2	t2
IS142/IS143	14,25	1,375	2,76	0,31	1,51
IS152/IS153	16,61	1,625	3,15	0,38	1,79

3.2.1 Electric motors

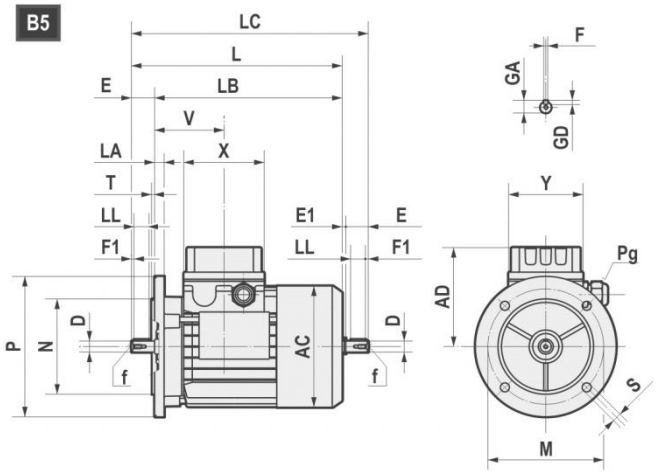

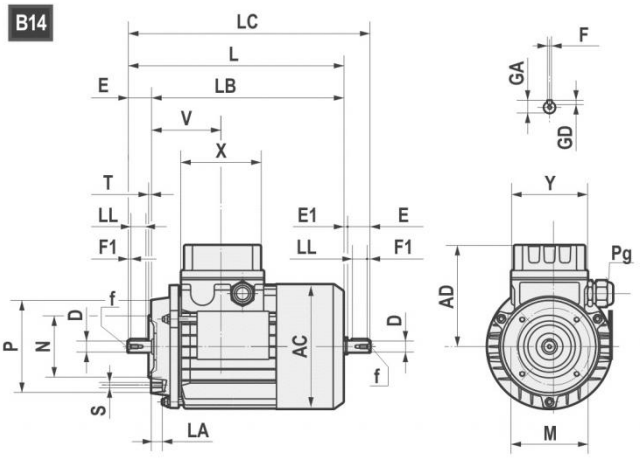

	AC	AD	L	LB	LC	X	Y	V	D	E	E1	f	F1	GA	F	GD
063	121	104	211	188	235,5	80	74	69	11 j6	23	1,5	M4x10	2,5	12,5	4	4
071	139	112	238,5	208,5	271	80	74	74,5	14 j6	30	2,5	M5x12.5	3	16	5	5
080	158	122	272,5 *(296)	232,5 *(256)	314 *(337)	80	74	78	19 j6	40	1,5	M6x16	5	21,5	6	6
90S	173	146	298 *(331)	248 *(281)	349,5 *(381)	98	98	89,5	24 j6	50	1,5	M8x19	5	27	8	7
90L	173	146	323 *(356)	273 *(306)	374,5 *(408)	98	98	89,5	24 j6	50	1,5	M8x19	5	27	8	7
100	191	155	368	308	431,5	98	98	97,5	28 j6	60	3,5	M10x22	7,5	31	8	7
112	211	170	382,5 *(408)	322,5 *(348)	447 *(472)	98	98	100	28 j6	60	3,5	M10x22	7,5	31	8	7
132S	249	195	452	372	536,5	118	118	115,5	38 k6	80	4	M12x28	10	41	10	8
132L	249	195	490	410	574,5	118	118	115,5	38 k6	80	4	M12x28	10	41	10	8
160S	249	195	520	410	/	118	118	115,5	42k6	100	/	M16x36	10	45	12	8

*TP80B4,TP90S4, TP90L4, TP90S6, TP112M4, TP112M6

B5	M	N	P	LA	S	T
063	115	95	140	10	9	3
071	130	110	160	10	9,5	3,5
080	165	130	200	12	11	3,5
090	165	130	200	12	11	3,5
100	215	180	250	15	14	4
112	215	180	250	14,5	14	4
132	265	230	300	20	14	3,5
160	300	250	350	13	18,5	3,5

B14	M	N	P	LA	S	T
063	75	60	90	10	M5	2,5
071	85	70	105	10,5	M6	2,5
080	100	80	120	10,5	M6	3
090	115	95	140	11,5	M8	3
100	130	110	160	15	M8	3,5
112	130	110	160	11,5	M8	3,5
132	165	130	200	20,5	M10	3,5
160	215	180	250	-	M12	4

All dimensions are in mm

3.2 ELECTRIC MOTORS

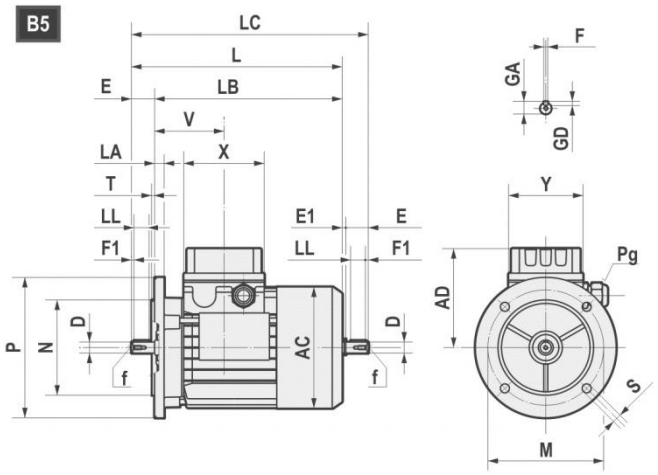

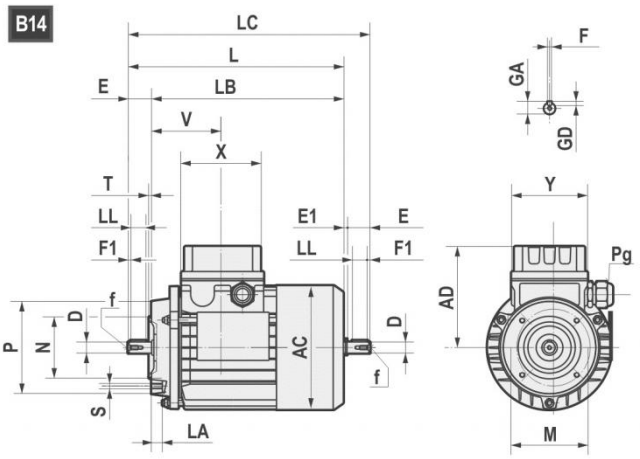

		AC	AD	L	LB	X	D	E	f	GA	F	GD	LL	Pg	
160M	2-4-6	314	251	600	490	158	42	110	M16	45	12	8	90	2-M40x1,5	1-M16x1,5
160L	2-4-6	314	251	645	535	158	42	110	M16	45	12	8	90	2-M40x1,5	1-M16x1,5
180M	2-4	355	267	680	570	158	48	110	M16	51,5	14	9	100	2-M40x1,5	1-M16x1,5
180L	4-6	355	267	720	610	158	48	110	M16	51,5	14	9	100	2-M40x1,5	1-M16x1,5
200L	2-4-6	397	300	785	675	187	55	110	M20	59	16	10	100	2-M50x1,5	1-M16x1,5
225S	4	446	325	820	680	187	60	140	M20	64	18	11	125	2-M50x1,5	1-M16x1,5
225M	2	446	325	815	705	187	55	110	M20	59	16	10	100	2-M50x1,5	1-M16x1,5
225M	4-6	446	325	845	705	187	60	140	M20	64	18	11	125	2-M50x1,5	1-M16x1,5
250M	2-4-6	485	360	910	770	238	60	140	M20	64	18	11	125	2-M63x1,5	1-M16x1,5
250M	2-4-6	485	360	910	770	238	65	140	M20	69	18	11	125	2-M63x1,5	1-M16x1,5
280S	2-4-6	547	390	970	830	238	65	140	M20	69	18	11	125	2-M63x1,5	1-M16x1,5
280S	2-4-6	547	390	970	830	238	75	140	M20	79,5	20	12	125	2-M63x1,5	1-M16x1,5
280M	2-4-6	547	390	1025	885	238	65	140	M20	69	18	11	125	2-M63x1,5	1-M16x1,5
280M	2-4-6	547	390	1025	885	238	75	140	M20	79,5	20	12	125	2-M63x1,5	1-M16x1,5

B5	M	N	P	LA	S	T
160	300	250	350	13	19	5
180	300	250	350	15	19	5
200	350	300	400	17	19	5
225	400	350	450	20	19	5
250	500	450	550	22	19	5
280	500	450	550	22	19	5

All dimensions are in mm

3.2.2 Nominal power - [HP]

	63A	63B	63C	71A	71B	71C	80A			80B		
Poles	TS	TS	TS	TS	TS	TS	TS	TH	TP	TS	TH	TP
2	0,24	0,34	0,5	0,5	0,75	-	-	1	1	-	1,5	1,5
4	0,16	0,24	0,3	0,34	0,5	0,75	0,75	-	-	-	1	1
6	0,12	0,16	0,2	0,24	0,34	0,5	0,5	-	-	0,75	-	-

	90S		90L		100LR	100L	100LA		112MR	112MS	112MA	112M
Poles	TH	TP	TH	TP	TP	TP	TH	TP	TP	TP	TH	TP
2	2	2	3	3	-	4	4	-	-	-	5,4	5,4
4	1,5	1,5	2	2	-	-	3	3	3	4	5,4	5,4
6	-	1	1	-	1,5	2	1,5	-	-	-	3	3

	112MR	112MS	132S	132SA	132MS	132SB	132M	132MA		132MB	
Poles	TP	TP	TP	TH	TP	TH	TP	TH	TP	TH	TP
2	-	-	7,5	7,5	-	10	10	12,5	-	-	-
4	3	4	-	7,5	7,5	-	10	10	-	12,5	-
6	-	-	4	4	-	-	-	5,4	5,4	7,5	7,5

	160M	160MA	160MB	160L	160LA	180M	180L
Poles	TP	TP	TP	TP	TP	TP	TP
2	-	15	20	25	-	30	-
4	-	15	-	-	20	25	30
6	10	-	-	15	-	-	20

	200L	200LA	200LB	225S	225M	250M	280S	280M
Poles	TP	TP	TP	TP	TP	TP	TP	TP
2	-	40	50	-	-	-	-	-
4	40	-	-	50	60	74	101	121
6	-	25	30	-	-	-	-	-

3.3 WEIGHT

The values reported in the tables are referred to the weight of the gearbox with lubricant (S140/S150 supplied without lubricant).

* PS	56C	140TC	180TC	210TC	250TC	280TC	320TC	360TC	
052-053	44,5	44,4	47,6	/	/	/	/	/	~ lb
062-063	52,4	52,3	55,6	/	/	/	/	/	
082-083	76,8	76,6	81,8	96,7	96,4	/	/	/	
102-103	101	100,8	106	121	120,7	/	/	/	
122-123	/	181,6	186,7	202,8	202,7	227,9	234,1	/	
142	/	/	/	381,4	400	400	405,6	/	
143	/	/	405,6	405,6	421,1	/	/	/	
152	/	/	/	564,4	564,4	564,4	584,2	584,2	
153	/	/	/	597,4	597,4	597,4	/	/	

IS	~ lb
052-053	42,2
062-063	49,9
082-083	85,8
102-103	110
122-123	202
142	341
143	363
152	484
153	528

*Weight without motor

	TS									
CS	063	071	080	090S	090L	100	112	132S	132M	
052-053	43	45	55,3	63,9	68,3	80,5	105,8	/	/	~ lb
062-063	/	52,7	63,3	71,9	76,3	88,4	113,7	/	/	
082-083	/	80,5	91,7	97	100,3	111,5	136,7	167,5	193,1	
102-103	/	104,7	116	121,2	124,6	135,8	160,9	191,8	217,4	
122-123	/	/	/	200,6	202,8	216,	238,1	271,2	291,	

	TH							
CS	080	090S	090L	100	112	132S	132M	
052-053	59,1	69,1	72,66	85,5	112,6	/	/	~ lb
062-063	67	77,	80,60	93,5	120,5	/	/	
082-083	95,4	102,2	104,63	116,6	143,5	179,2	208,2	
102-103	119,7	126,4	128,88	140,9	167,7	203,5	232,4	
122-123	/	205,78	207,1	221,1	244,9	282,8	306,1	

	TBS									
CS	063	071	080	090S	090L	100	112	132S	132M	
052-053	46,3	49,8	63	76,1	80,5	92,6	127,2	/	/	~ lb
062-063	/	57,8	71	84	88,4	100,5	135,1	/	/	
082-083	/	85,3	99,2	109,1	112,4	123,5	158,1	190,3	225,5	
102-103	/	109,6	123,5	133,4	136,7	147,7	182,3	214,5	249,8	
122-123	/	/	/	212,7	214,9	228,2	259,5	293,9	323,4	

	TBH							
CS	080	090S	090L	100	112	132S	132M	
052-053	66,8	81,1	84,8	100,7	134	/	/	~ lb
062-063	74,7	89,1	92,7	108,7	142	/	/	
082-083	103	114,2	116,7	131,6	164,9	201,9	239,9	
102-103	127,2	138,4	141	155,9	189,2	226,2	264,1	
122-123	/	217,8	219,3	236,3	266,3	305,6	337,7	

4.1 LOW SPEED SHAFTS

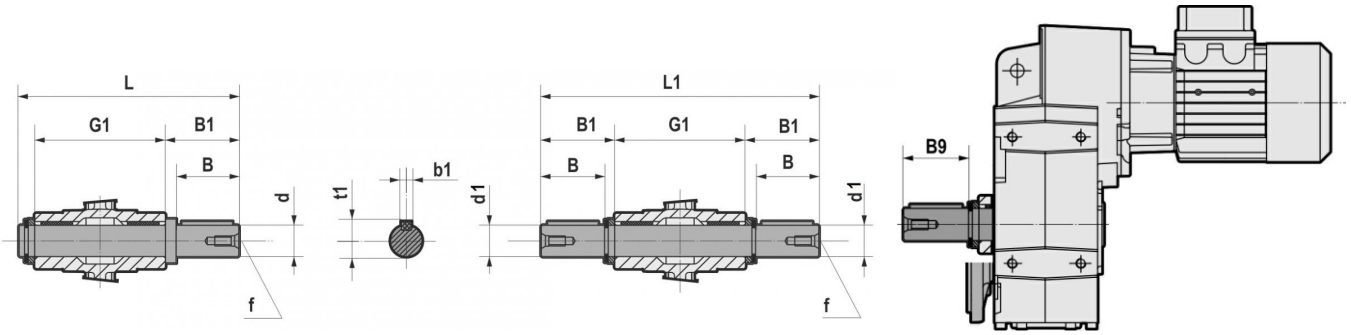

	d h6	B	B1	G1	L	f	b1	t1
S062/S063	1,38	2,28	2,44	5,51	8,29	M12	0,39	1,50
S082/S083	1,57	3,15	3,32	7,09	10,75	M16	0,47	1,69
S102/S103	1,97	3,94	4,13	8,27	12,80	M16	0,55	2,11
S122/S123	2,36	4,72	4,92	9,45	14,76	M20	0,71	2,52

	d k5	d1 h6	B	B1	B9	L1	f	b1	t1
S142/S143	2,75	2,75	5,51	5,91	7,76	23,62	3/4-10UNC	0,79	2,93
S152/S153	2,75	2,75	5,51	5,91	7,52	23,62	3/4-10UNC	0,79	2,93
S152/S153	3,625	3,625	6,69	7,09	8,70	27,95	1-8UNC	0,875	4,01

4.2 OUTPUT FLANGE

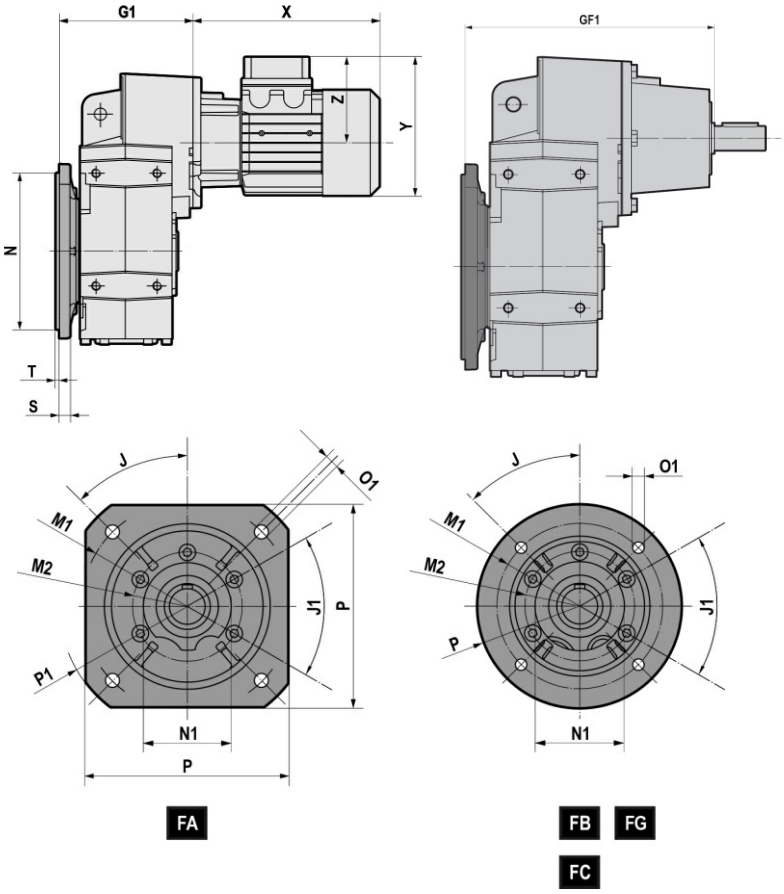

		J	J1	M1	M2	N f8	N1	O1	P	P1	S	T	G1	GF1
S052 S053	FA	45	45	8,46	4,13	7,09	3,54	0,55	7,87	9,84	0,47	0,16	6,02	9,57
	FB	45	45	6,50	4,13	5,12	3,54	0,43	7,87	/	0,47	0,14	6,02	9,57
S062 S063	FA	45	45	8,46	4,13	7,09	3,54	0,55	7,87	9,84	0,47	0,16	6,79	10,33
	FB	45	45	6,50	4,13	5,12	3,54	0,43	7,87	/	0,47	0,14	6,79	10,33
S082 S083	FA	45	45	10,43	5,12	9,06	4,33	0,55	9,84	11,81	0,59	0,16	8,94	13,39
	FB	45	45	8,46	5,12	7,09	4,33	0,55	9,84	/	0,59	0,16	8,94	13,39
	FC	45	45	6,50	5,12	5,12	4,33	0,43	7,87	/	0,59	0,14	8,94	13,39
S102 S103	FA	45	45	11,81	6,50	9,84	5,12	0,71	11,81	13,78	0,63	0,20	9,74	14,19
	FB	45	45	10,43	6,50	9,06	5,12	0,55	11,81	/	0,63	0,16	9,74	14,19
	FC	45	45	8,46	6,50	7,09	5,12	0,55	9,84	/	0,63	0,16	9,74	14,19
S122 S123	FA	45	45	13,78	7,28	11,81	5,91	0,71	13,78	15,75	0,71	0,20	11,30	16,28
	FB	45	45	11,81	7,28	9,84	5,91	0,71	13,78	/	0,71	0,20	11,30	16,28
	FC	45	45	10,43	7,28	9,06	5,91	0,55	11,81	/	0,71	0,16	11,30	16,28
S142 S143	FG	22°30′	/	15,75	/	13,78 g6	/	0,71	17,72	/	0,79	0,20	13,33	16,77
S152 S153	FG	22°30′	/	15,75	/	13,78 g6	/	0,71	17,72	/	0,79	0,20	13,33	18,94

4.3.1 Reaction bolt

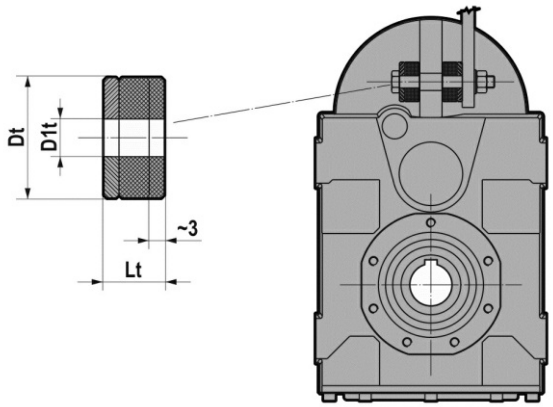

	Dt	D1t	Lt
S052/S053	1,57	0,49	0,79
S062/S063	1,57	0,49	0,79
S082/S083	1,57	0,49	0,79
S102/S103	2,36	0,83	1,18
S122/S123	2,36	0,83	1,18
S142/S143	2,36	0,98	1,53
S152/S153	2,36	0,98	1,40

4.3.2 Torque arm - S 142...153

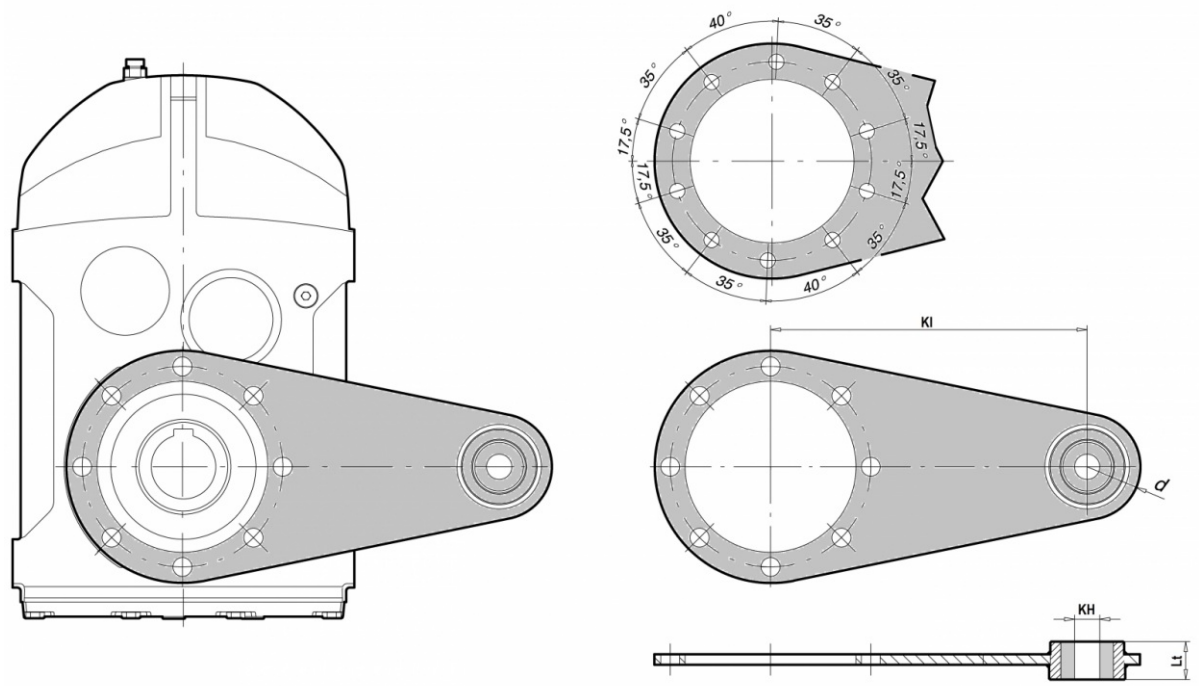

	Kl	KH	d	Lt
S142/S143	13,78	0,98	1,77	1,18
S152/S153	17,72	0,98	1,97	1,18

4.4 BACKSTOP DEVICE

The gear reducer can be supplied with backstop device on input shaft. Backstop device allows output shaft rotation in only one sense of direction; according to the size, it is available in the input flange or in the motor with the same dimensions. It is important to specify the required sense of direction on the order. The backstop device is not available for mounting position V5 with motor size IEC 100...225.

SENSE OF DIRECTION AVAILABLE

S... 2/C-D-L

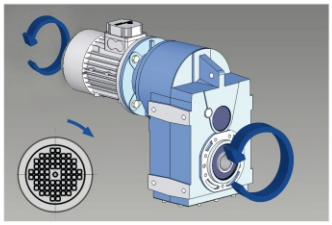

CLOCKWISE SENSE OF DIRECTION REFERRED TO HIGH SPEED SHAFT

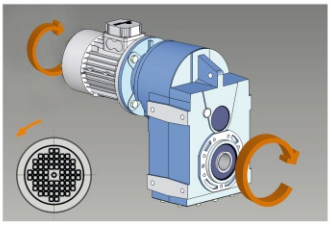

COUNTER CLOCKWISE SENSE OF DIRECTION REFERRED TO HIGH SPEED SHAFT

S... 3/C-D-L

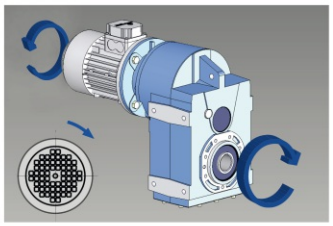

CLOCKWISE SENSE OF DIRECTION REFERRED TO HIGH SPEED SHAFT

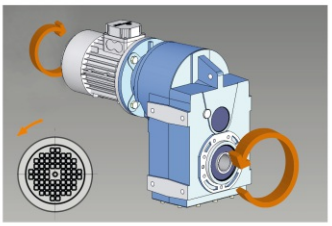

COUNTER CLOCKWISE SENSE OF DIRECTION REFERRED TO HIGH SPEED SHAFT

	063	071	080	090	100-112	132	160	180	200	225
	140x11	160x14	200x19	200x24	250x28	300x38	350x42	350x48	400x55	450x60
S052		B5	B5	B5	B5					
S053	B5	B5	B5	B5						
S062		B5	B5	B5	B5					
S063		B5	B5	B5						
S082			B5	B5	B5	B5				
S083		B5	B5	B5	B5					
S102			B5	B5	B5	B5	B5			
S103		B5	B5	B5	B5					
S122			B5	B5	B5	B5	B5	B5	B5	
S123			B5	B5	B5	B5				
S142						B5	B5	B5	B5	
S143					B5	B5	B5			
S152							B5	B5	B5	B5
S153						B5	B5	B5		

Dimensions are only in mm.

4.5 OUTPUT SHAFT WITH SHRINK DISC

Clean and degrease the surfaces of the shaft to be fitted to. Comply with the indicated tightening torque of screws (M_T).
The shrink disc is designed only to transmit the output torque.
In case of radial and/or axial loads or V5-V6 mounting positions, please contact the technical support.

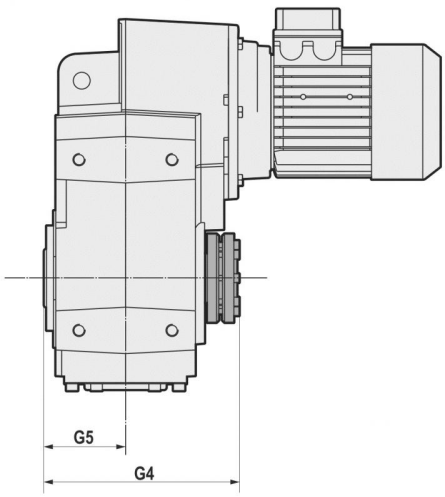

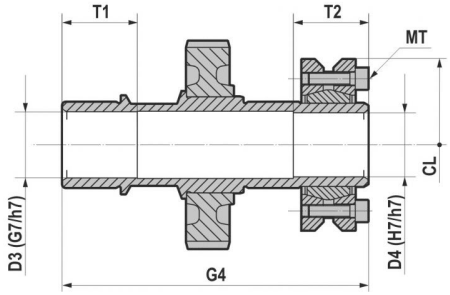

	D3	D4	G4	G5	T1	T2	CL	M_T 12.9 [Nm]
S052/S053	1,22	1,18	5,98	2,36	1,38	1,38	2,91	15
S062/S063	1,42	1,38	6,81	2,76	1,57	1,38	3,15	15
S082/S083	1,61	1,57	8,54	3,54	1,97	1,57	3,94	15
S102/S103	2,01	1,97	9,76	4,13	2,17	1,57	4,53	15
S122/S123	2,40	2,36	11,10	4,72	2,36	1,97	5,71	40

	D3 - D4 (H7/h6)	G4	CL	MT 12.9 [Nm]
S142-S143	2,95	13,58	6,10	70
S152-S153	3,74	15,94	7,87	103
	3,15		7,28	

4.6 REINFORCED OIL SEALS FOR OUTPUT SHAFT

The reinforced seal can be done through the standard oil seal with VRM ring.
On request the gear reducer can be supplied with fluoroelastomer FPM (FKM) seals.

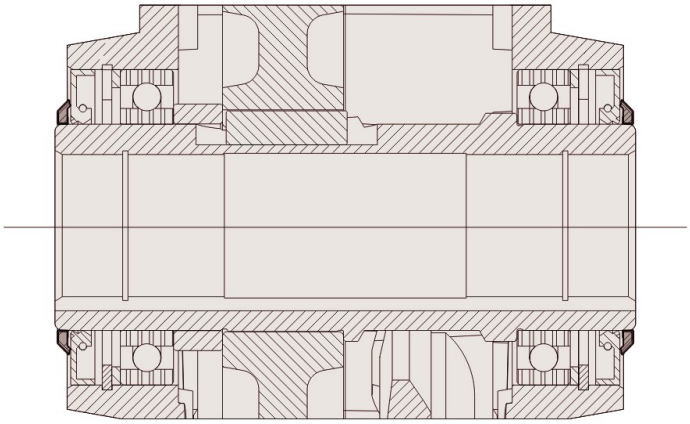

4.7 ASSEMBLING/DISASSEMBLING KIT

Mounting/dismounting kit for hollow shaft gear reducers with keyway that includes:

1. Retaining bolt
2. Circlip
3. Fixed nut
4. Forcing washer

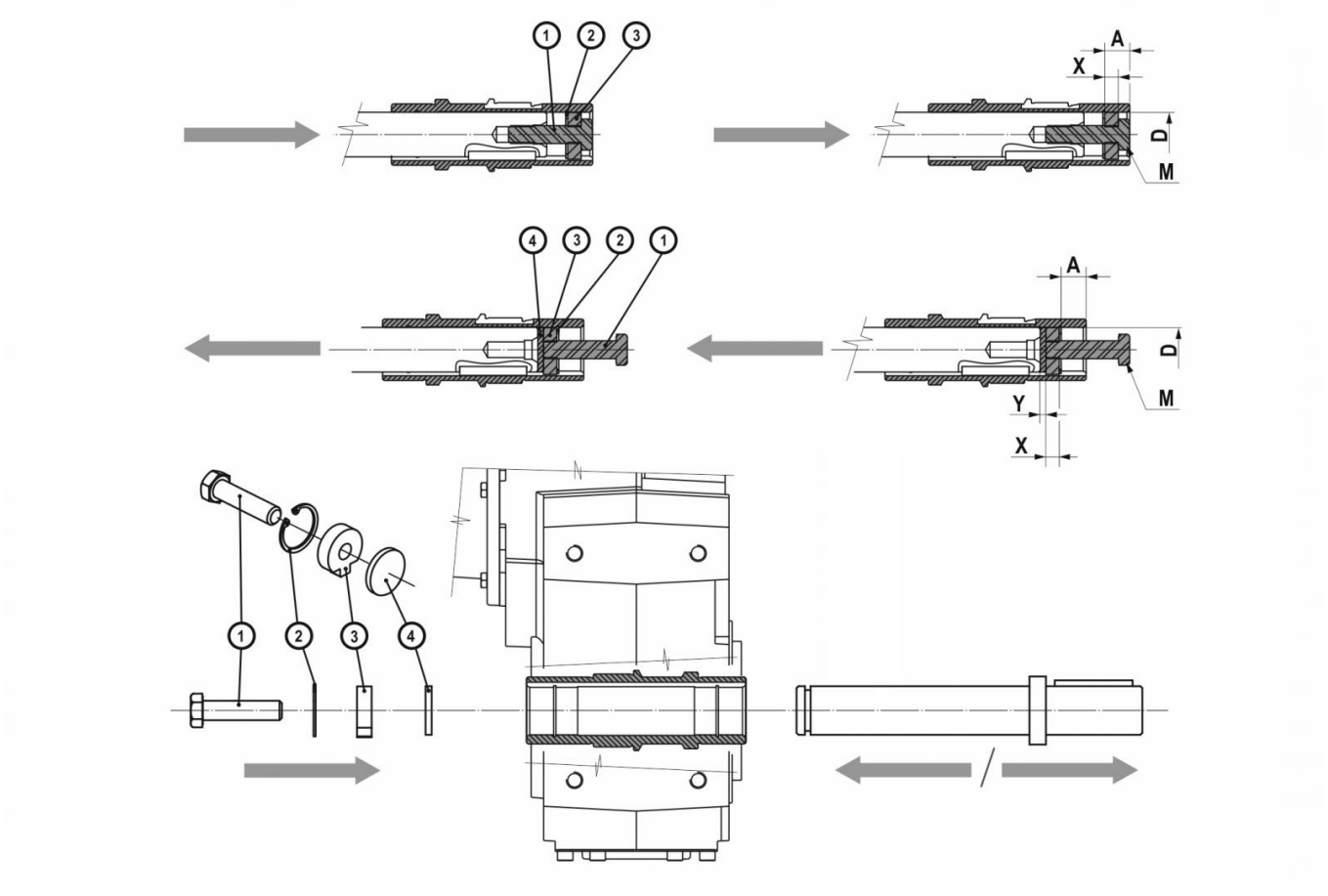

	D	A	X	Y	M
S052/S053	1,18	0,54	0,39	0,2	M10x35
S062/S063	1,38	0,47	0,47	0,2	M12x45
S082/S083	1,57	0,88	0,47	0,2	M16x50
	1,77				
S102/S103	1,97	0,98	0,47	0,2	M16x50
S122/S123	2,36	1,10	0,63	0,2	M20x70

0.16 HP

Output speed [rpm]	Service factor sf	Output torque [in-lbs]	Exact ratio i	Max. torque [in-lbs]	OHL		Gearmotor		Gear Reducer	
					Output shaft [lbs]	Hollow bore [lbs]	Reducer	Motor	Reducer	NEMA C-input
202.9	31.2	48	8.63	1505	904	904	-	-	**PS052**	56C
157.1	27.0	62	11.14	1682	982	982	-	-	**PS052**	56C
145.8	26.4	67	12.00	1770	1006	1006	-	-	**PS052**	56C
128.1	24.4	76	13.66	1859	1049	1049	-	-	**PS052**	56C
114.6	24.9	85	15.27	2124	1088	1088	-	-	**PS052**	56C
107.5	23.3	91	16.29	2124	1110	1110	-	-	**PS052**	56C
93.9	20.4	104	18.63	2124	1160	1160	-	-	**PS052**	56C
88.7	19.3	110	19.73	2124	1181	1181	-	-	**PS052**	56C
83.2	19.6	118	21.04	2301	1206	1206	-	-	**PS052**	56C
81.3	19.1	120	21.53	2301	1215	1215	-	-	**PS052**	56C
72.7	17.1	134	24.07	2301	1259	1259	-	-	**PS052**	56C
69.4	18.2	141	25.20	2567	1277	1277	-	-	**PS052**	56C
67.9	17.8	144	25.79	2567	1287	1287	-	-	**PS052**	56C
62.9	16.5	155	27.81	2567	1318	1318	-	-	**PS052**	56C
58.3	15.3	168	30.00	2567	1349	1349	-	-	**PS052**	56C/56C
53.8	14.6	182	32.55	2655	1349	1349	-	-	**PS052**	56C
53.0	14.4	184	33.00	2655	1349	1349	-	-	**PS052**	56C
51.3	13.9	190	34.09	2655	1349	1349	-	-	**PS052**	56C
47.9	14.3	204	36.55	2921	1349	1349	-	-	**PS052**	56C
45.2	13.5	217	38.75	2921	1349	1349	-	-	**PS052**	56C
43.9	13.9	223	39.90	3098	1349	1349	-	-	**PS052**	56C
41.1	13.0	238	42.63	3098	1349	1349	-	-	**PS052**	56C
38.0	12.1	257	46.00	3098	1349	1349	-	-	**PS052**	56C
37.1	11.7	264	47.20	3098	1349	1349	-	-	**PS052**	56C
33.5	10.6	292	52.25	3098	1349	1349	-	-	**PS052**	56C
30.2	9.6	323	57.86	3098	1349	1349	-	-	**PS052**	56C
29.5	9.3	332	59.42	3098	1349	1349	-	-	**PS052**	56C
24.0	7.6	407	72.83	3098	1349	1349	-	-	**PS052**	56C
47.9	15.7	198	36.50	3098	1349	1349	**CS053**	63A4	**PS053**	56C
37.1	12.1	255	47.14	3098	1349	1349	**CS053**	63A4	**PS053**	56C
30.3	9.9	313	57.79	3098	1349	1349	**CS053**	63A4	**PS053**	56C
27.5	9.0	345	63.74	3098	1349	1349	**CS053**	63A4	**PS053**	56C
23.6	7.7	402	74.20	3098	1349	1349	**CS053**	63A4	**PS053**	56C
22.4	7.3	423	78.14	3098	1349	1349	**CS053**	63A4	**PS053**	56C
18.3	6.0	519	95.84	3098	1349	1349	**CS053**	63A4	**PS053**	56C
14.9	4.9	636	117.48	3098	1349	1349	**CS053**	63A4	**PS053**	56C
12.7	4.2	745	137.45	3098	1349	1349	**CS053**	63A4	**PS053**	56C
9.9	3.2	962	177.55	3098	1349	1349	**CS053**	63A4	**PS053**	56C
8.8	2.9	1075	198.45	3098	1349	1349	**CS053**	63A4	**PS053**	56C
8.0	2.6	1179	217.64	3098	1349	1349	**CS053**	63A4	**PS053**	56C
6.8	2.2	1388	256.33	3098	1349	1349	**CS053**	63A4	**PS053**	56C

0.16 HP

Output speed [rpm]	Service factor sf	Output torque [in-lbs]	Exact ratio i	Max. torque [in-lbs]	OHL		Gearmotor		Gear Reducer	
					Output shaft [lbs]	Hollow bore [lbs]	Reducer	Motor	Reducer	NEMA C-input
5.6	1.8	1702	314.21	3098	1349	1349	**CS053**	63A4	**PS053**	56C
218.8	65.3	45	8.00	2921	1521	608	-	-	**PS062**	56C
196.2	58.6	50	8.92	2921	1576	630	-	-	**PS062**	56C
183.3	59.7	53	9.55	3186	1611	645	-	-	**PS062**	56C
164.4	53.6	59	10.65	3186	1670	668	-	-	**PS062**	56C
149.5	52.8	65	11.71	3452	1722	689	-	-	**PS062**	56C
134.0	51.0	73	13.06	3717	1785	714	-	-	**PS062**	56C
131.0	49.8	75	13.36	3717	1798	719	-	-	**PS062**	56C
109.8	44.7	89	15.94	3983	1904	762	-	-	**PS062**	56C
108.3	44.1	90	16.16	3983	1913	765	-	-	**PS062**	56C
90.7	37.0	108	19.29	3983	2026	810	-	-	**PS062**	56C
89.5	37.3	109	19.55	4071	2035	814	-	-	**PS062**	56C
75.5	32.1	130	23.18	4160	2150	860	-	-	**PS062**	56C
73.7	31.3	133	23.75	4160	2167	867	-	-	**PS062**	56C
69.6	30.2	140	25.14	4248	2207	883	-	-	**PS062**	56C
63.3	27.5	155	27.66	4248	2248	899	-	-	**PS062**	56C
51.6	25.2	190	33.93	4779	2248	899	-	-	**PS062**	56C
47.9	26.0	204	36.57	5310	2248	899	-	-	**PS062**	56C
44.4	24.1	220	39.38	5310	2248	899	-	-	**PS062**	56C
40.1	21.8	244	43.64	5310	2248	899	-	-	**PS062**	56C
38.0	20.6	258	46.10	5310	2248	899	-	-	**PS062**	56C
36.2	19.7	270	48.30	5310	2248	899	-	-	**PS062**	56C
32.7	17.8	299	53.53	5310	2248	899	-	-	**PS062**	56C
31.8	17.3	307	55.00	5310	2248	899	-	-	**PS062**	56C
25.9	14.1	377	67.47	5310	2248	899	-	-	**PS062**	56C
52.1	28.9	184	33.57	5310	2248	899	-	-	**PS063**	56C
46.3	25.7	207	37.77	5310	2248	899	-	-	**PS063**	56C
43.7	24.2	219	40.05	5310	2248	899	-	-	**PS063**	56C/56C
35.6	19.8	269	49.13	5310	2248	899	-	-	**PS063**	56C
31.7	17.6	302	55.29	5310	2248	899	-	-	**PS063**	56C
29.8	16.5	321	58.72	5310	2248	899	-	-	**PS063**	56C
26.6	14.7	360	65.85	5310	2248	899	-	-	**PS063**	56C
25.6	14.2	373	68.25	5310	2248	899	-	-	**PS063**	56C
23.8	13.2	403	73.63	5310	2248	899	-	-	**PS063**	56C
21.5	11.9	445	81.43	5310	2248	899	-	-	**PS063**	56C
17.5	9.7	546	99.89	5310	2248	899	-	-	**PS063**	56C
13.8	7.7	692	126.43	5310	2248	899	-	-	**PS063**	56C
11.6	6.4	825	150.85	5310	2248	899	-	-	**PS063**	56C
9.6	5.3	999	182.53	5310	2248	899	-	-	**PS063**	56C
9.5	5.2	1012	185.05	5310	2248	899	-	-	**PS063**	56C
8.0	4.5	1191	217.79	5310	2248	899	-	-	**PS063**	56C

0.16 HP

Output speed [rpm]	Service factor sf	Output torque [in-lbs]	Exact ratio i	Max. torque [in-lbs]	OHL		Gearmotor		Gear Reducer	
					Output shaft [lbs]	Hollow bore [lbs]	Reducer	Motor	Reducer	NEMA C-input
6.6	3.6	1462	267.16	5310	2248	899	-	-	**PS063**	56C
238.5	118.7	41	7.34	4868	2886	825	-	-	**PS082**	56C
217.1	117.9	45	8.06	5310	2977	851	-	-	**PS082**	56C
176.0	103.6	56	9.94	5753	3190	911	-	-	**PS082**	56C
150.8	95.5	65	11.61	6196	3356	959	-	-	**PS082**	56C
137.3	93.2	71	12.75	6638	3462	989	-	-	**PS082**	56C
124.6	85.7	78	14.04	6727	3574	1021	-	-	**PS082**	56C
113.4	79.1	86	15.43	6815	3686	1053	-	-	**PS082**	56C
111.3	77.6	88	15.73	6815	3709	1060	-	-	**PS082**	56C
101.2	70.5	97	17.29	6815	3827	1093	-	-	**PS082**	56C
92.0	64.1	106	19.03	6815	3949	1128	-	-	**PS082**	56C
86.9	60.6	113	20.14	6815	4023	1149	-	-	**PS082**	56C
79.1	57.3	124	22.13	7081	4047	1185	-	-	**PS082**	56C/56C
72.9	52.8	134	24.00	7081	4047	1218	-	-	**PS082**	56C
67.2	48.7	146	26.05	7081	4047	1251	-	-	**PS082**	56C
64.1	52.2	152	27.29	7966	4047	1270	-	-	**PS082**	56C
61.0	49.7	160	28.67	7966	4047	1291	-	-	**PS082**	56C
59.1	48.2	165	29.60	7966	4047	1304	-	-	**PS082**	56C
55.1	49.9	178	31.78	8851	4047	1335	-	-	**PS082**	56C
50.1	45.4	195	34.91	8851	4047	1377	-	-	**PS082**	56C/56C
49.3	44.6	198	35.50	8851	4047	1384	-	-	**PS082**	56C
40.6	36.8	241	43.05	8851	4047	1475	-	-	**PS082**	56C
34.8	31.5	281	50.25	8851	4047	1551	-	-	**PS082**	56C/56C
32.2	29.2	303	54.27	8851	4047	1591	-	-	**PS082**	56C
28.2	25.6	346	61.98	8851	4047	1619	-	-	**PS082**	56C
25.9	24.0	369	67.52	8851	4047	1619	-	-	**PS083**	56C
23.6	21.8	406	74.18	8851	4047	1619	-	-	**PS083**	56C/56C
21.4	19.8	447	81.71	8851	4047	1619	-	-	**PS083**	56C
19.1	17.7	501	91.49	8851	4047	1619	-	-	**PS083**	56C
17.4	16.1	550	100.62	8851	4047	1619	-	-	**PS083**	56C
14.9	13.8	641	117.17	8851	4047	1619	-	-	**PS083**	56C
13.6	12.6	704	128.73	8851	4047	1619	-	-	**PS083**	56C/56C
12.8	11.9	746	136.34	8851	4047	1619	-	-	**PS083**	56C
11.0	10.2	869	158.76	8851	4047	1619	-	-	**PS083**	56C
9.5	8.8	1011	184.88	8851	4047	1619	-	-	**PS083**	56C
8.6	8.0	1111	203.11	8851	4047	1619	-	-	**PS083**	56C/56C
8.5	7.9	1123	205.34	8851	4047	1619	-	-	**PS083**	56C
7.7	7.2	1237	226.04	8851	4047	1619	-	-	**PS083**	56C
7.0	6.5	1370	250.50	8851	4047	1619	-	-	**PS083**	56C
6.6	6.1	1456	266.13	8851	4047	1619	-	-	**PS083**	56C
6.0	5.5	1599	292.36	8851	4047	1619	-	-	**PS083**	56C/56C

0.16 HP

Output speed [rpm]	Service factor sf	Output torque [in-lbs]	Exact ratio i	Max. torque [in-lbs]	OHL		Gearmotor		Gear Reducer	
					Output shaft [lbs]	Hollow bore [lbs]	Reducer	Motor	Reducer	NEMA C-input
5.5	5.1	1727	315.73	8851	4047	1619	-	-	**PS083**	56C
4.9	4.5	1973	360.58	8851	4047	1619	-	-	**PS083**	56C
92.1	116.7	106	19.00	12391	4807	1373	-	-	**PS102**	56C
84.0	106.5	116	20.83	12391	4946	1415	-	-	**PS102**	56C
72.1	97.9	136	24.28	13276	4946	1489	-	-	**PS102**	56C
66.5	90.2	147	26.33	13276	4946	1529	-	-	**PS102**	56C
58.6	79.6	167	29.87	13276	4946	1594	-	-	**PS102**	56C
54.0	73.3	181	32.40	13276	4946	1637	-	-	**PS102**	56C
45.7	62.0	214	38.30	13276	4946	1729	-	-	**PS102**	56C
41.2	52.2	238	42.53	12391	4946	1790	-	-	**PS102**	56C
39.8	46.8	246	44.00	11506	4946	1810	-	-	**PS102**	56C
37.1	53.8	263	47.13	14161	4946	1851	-	-	**PS102**	56C
31.7	37.4	308	55.14	11506	4946	1949	-	-	**PS102**	56C
29.5	42.7	332	59.40	14161	4946	1997	-	-	**PS102**	56C
25.8	37.4	379	67.84	14161	4946	2023	-	-	**PS102**	56C
21.5	31.8	445	81.39	14161	4946	2023	-	-	**PS103**	56C
19.5	28.8	491	89.77	14161	4946	2023	-	-	**PS103**	56C
17.5	25.8	548	100.15	14161	4946	2023	-	-	**PS103**	56C
15.8	23.4	605	110.55	14161	4946	2023	-	-	**PS103**	56C
14.4	21.3	664	121.29	14161	4946	2023	-	-	**PS103**	56C
12.4	18.3	773	141.24	14161	4946	2023	-	-	**PS103**	56C
10.1	14.9	951	173.78	14161	4946	2023	-	-	**PS103**	56C
9.3	13.7	1031	188.51	14161	4946	2023	-	-	**PS103**	56C
7.9	11.6	1219	222.85	14161	4946	2023	-	-	**PS103**	56C
7.8	11.5	1230	224.76	14161	4946	2023	-	-	**PS103**	56C
6.4	9.4	1500	274.20	14161	4946	2023	-	-	**PS103**	56C
6.2	9.2	1537	280.89	14161	4946	2023	-	-	**PS103**	56C
5.5	8.1	1755	320.79	14161	4946	2023	-	-	**PS103**	56C
5.1	7.5	1891	345.60	14161	4946	2023	-	-	**PS103**	56C
4.4	6.6	2159	394.69	14161	4946	2023	-	-	**PS103**	56C

0.25 HP

Output speed [rpm]	Service factor sf	Output torque [in-lbs]	Exact ratio i	Max. torque [in-lbs]	OHL		Gearmotor		Gear Reducer	
					Output shaft [lbs]	Hollow bore [lbs]	Reducer	Motor	Reducer	NEMA C-input
202.9	20.0	75	8.63	1505	900	900	-	-	**PS052**	56C
157.1	17.3	97	11.14	1682	977	977	-	-	**PS052**	56C
145.8	16.9	105	12.00	1770	1001	1001	-	-	**PS052**	56C
128.1	15.6	119	13.66	1859	1043	1043	-	-	**PS052**	56C
114.6	15.9	133	15.27	2124	1081	1081	-	-	**PS052**	56C
107.5	14.9	142	16.29	2124	1103	1103	-	-	**PS052**	56C
93.9	13.1	163	18.63	2124	1151	1151	-	-	**PS052**	56C

0.25 HP

Output speed [rpm]	Service factor sf	Output torque [in-lbs]	Exact ratio i	Max. torque [in-lbs]	OHL		Gearmotor		Gear Reducer	
					Output shaft [lbs]	Hollow bore [lbs]	Reducer	Motor	Reducer	NEMA C-input
88.7	12.3	172	19.73	2124	1172	1172	-	-	**PS052**	56C
83.2	12.5	184	21.04	2301	1196	1196	-	-	**PS052**	56C
81.3	12.2	188	21.53	2301	1205	1205	-	-	**PS052**	56C
72.7	11.0	210	24.07	2301	1247	1247	-	-	**PS052**	56C
69.4	11.7	220	25.20	2567	1266	1266	-	-	**PS052**	56C
67.9	11.4	225	25.79	2567	1275	1275	-	-	**PS052**	56C
62.9	10.6	243	27.81	2567	1305	1305	-	-	**PS052**	56C
58.3	9.8	262	30.00	2567	1336	1336	-	-	**PS052**	56C/56C
53.8	9.3	284	32.55	2655	1349	1349	-	-	**PS052**	56C
53.0	9.2	288	33.00	2655	1349	1349	-	-	**PS052**	56C
51.3	8.9	298	34.09	2655	1349	1349	-	-	**PS052**	56C
47.9	9.2	319	36.55	2921	1349	1349	-	-	**PS052**	56C
45.2	8.6	338	38.75	2921	1349	1349	-	-	**PS052**	56C
43.9	8.9	348	39.90	3098	1349	1349	-	-	**PS052**	56C
41.1	8.3	372	42.63	3098	1349	1349	-	-	**PS052**	56C
38.0	7.7	402	46.00	3098	1349	1349	-	-	**PS052**	56C
37.1	7.5	412	47.20	3098	1349	1349	-	-	**PS052**	56C
33.5	6.8	456	52.25	3098	1349	1349	-	-	**PS052**	56C
30.2	6.1	505	57.86	3098	1349	1349	-	-	**PS052**	56C
29.5	6.0	519	59.42	3098	1349	1349	-	-	**PS052**	56C
24.0	4.9	636	72.83	3098	1349	1349	-	-	**PS052**	56C
47.9	10.0	309	36.50	3098	1349	1349	**CS053**	63B4	**PS053**	56C
37.1	7.8	399	47.14	3098	1349	1349	**CS053**	63B4	**PS053**	56C
30.3	6.3	489	57.79	3098	1349	1349	**CS053**	63B4	**PS053**	56C
27.5	5.7	539	63.74	3098	1349	1349	**CS053**	63B4	**PS053**	56C
23.6	4.9	628	74.20	3098	1349	1349	**CS053**	63B4	**PS053**	56C
22.4	4.7	661	78.14	3098	1349	1349	**CS053**	63B4	**PS053**	56C
18.3	3.8	811	95.84	3098	1349	1349	**CS053**	63B4	**PS053**	56C
14.9	3.1	994	117.48	3098	1349	1349	**CS053**	63B4	**PS053**	56C
12.7	2.7	1163	137.45	3098	1349	1349	**CS053**	63B4	**PS053**	56C
9.9	2.1	1503	177.55	3098	1349	1349	**CS053**	63B4	**PS053**	56C
8.8	1.8	1680	198.45	3098	1349	1349	**CS053**	63B4	**PS053**	56C
8.0	1.7	1842	217.64	3098	1349	1349	**CS053**	63B4	**PS053**	56C
6.8	1.4	2169	256.33	3098	1349	1349	**CS053**	63B4	**PS053**	56C
5.6	1.2	2659	314.21	3098	1349	1349	**CS053**	63B4	**PS053**	56C
218.8	41.8	70	8.00	2921	1517	607	-	-	**PS062**	56C
196.2	37.5	78	8.92	2921	1572	629	-	-	**PS062**	56C
183.3	38.2	83	9.55	3186	1606	643	-	-	**PS062**	56C
164.4	34.3	93	10.65	3186	1664	666	-	-	**PS062**	56C
149.5	33.8	102	11.71	3452	1716	687	-	-	**PS062**	56C
134.0	32.6	114	13.06	3717	1778	711	-	-	**PS062**	56C

0.25 HP

Output speed [rpm]	Service factor sf	Output torque [in-lbs]	Exact ratio i	Max. torque [in-lbs]	OHL		Gearmotor		Gear Reducer	
					Output shaft [lbs]	Hollow bore [lbs]	Reducer	Motor	Reducer	NEMA C-input
131.0	31.9	117	13.36	3717	1791	716	-	-	**PS062**	56C
109.8	28.6	139	15.94	3983	1896	758	-	-	**PS062**	56C
108.3	28.2	141	16.16	3983	1905	762	-	-	**PS062**	56C
90.7	23.7	168	19.29	3983	2016	806	-	-	**PS062**	56C
89.5	23.9	171	19.55	4071	2025	810	-	-	**PS062**	56C
75.5	20.6	202	23.18	4160	2138	855	-	-	**PS062**	56C
73.7	20.1	207	23.75	4160	2155	862	-	-	**PS062**	56C
69.6	19.4	219	25.14	4248	2195	878	-	-	**PS062**	56C
63.3	17.6	241	27.66	4248	2248	899	-	-	**PS062**	56C
51.6	16.1	296	33.93	4779	2248	899	-	-	**PS062**	56C
47.9	16.6	319	36.57	5310	2248	899	-	-	**PS062**	56C
44.4	15.4	344	39.38	5310	2248	899	-	-	**PS062**	56C
40.1	13.9	381	43.64	5310	2248	899	-	-	**PS062**	56C
38.0	13.2	402	46.10	5310	2248	899	-	-	**PS062**	56C
36.2	12.6	422	48.30	5310	2248	899	-	-	**PS062**	56C
32.7	11.4	467	53.53	5310	2248	899	-	-	**PS062**	56C
31.8	11.1	480	55.00	5310	2248	899	-	-	**PS062**	56C
25.9	9.0	589	67.47	5310	2248	899	-	-	**PS062**	56C
52.1	18.5	287	33.57	5310	2248	899	-	-	**PS063**	56C
46.3	16.4	323	37.77	5310	2248	899	-	-	**PS063**	56C
43.7	15.5	342	40.05	5310	2248	899	-	-	**PS063**	56C/56C
35.6	12.6	420	49.13	5310	2248	899	-	-	**PS063**	56C
31.7	11.2	473	55.29	5310	2248	899	-	-	**PS063**	56C
29.8	10.6	502	58.72	5310	2248	899	-	-	**PS063**	56C
26.6	9.4	563	65.85	5310	2248	899	-	-	**PS063**	56C
25.6	9.1	583	68.25	5310	2248	899	-	-	**PS063**	56C
23.8	8.4	629	73.63	5310	2248	899	-	-	**PS063**	56C
21.5	7.6	696	81.43	5310	2248	899	-	-	**PS063**	56C
17.5	6.2	854	99.89	5310	2248	899	-	-	**PS063**	56C
13.8	4.9	1081	126.43	5310	2248	899	-	-	**PS063**	56C
11.6	4.1	1289	150.85	5310	2248	899	-	-	**PS063**	56C
9.6	3.4	1560	182.53	5310	2248	899	-	-	**PS063**	56C
9.5	3.4	1582	185.05	5310	2248	899	-	-	**PS063**	56C
8.0	2.9	1862	217.79	5310	2248	899	-	-	**PS063**	56C
6.6	2.3	2284	267.16	5310	2248	899	-	-	**PS063**	56C
238.5	76.0	64	7.34	4868	2885	824	-	-	**PS082**	56C
217.1	75.4	70	8.06	5310	2975	850	-	-	**PS082**	56C
176.0	66.3	87	9.94	5753	3187	911	-	-	**PS082**	56C
150.8	61.2	101	11.61	6196	3353	958	-	-	**PS082**	56C
137.3	59.6	111	12.75	6638	3458	988	-	-	**PS082**	56C
124.6	54.9	123	14.04	6727	3570	1020	-	-	**PS082**	56C

0.25 HP

Output speed [rpm]	Service factor sf	Output torque [in-lbs]	Exact ratio i	Max. torque [in-lbs]	OHL		Gearmotor		Gear Reducer	
					Output shaft [lbs]	Hollow bore [lbs]	Reducer	Motor	Reducer	NEMA C-input
113.4	50.6	135	15.43	6815	3682	1052	-	-	**PS082**	56C
111.3	49.6	137	15.73	6815	3705	1059	-	-	**PS082**	56C
101.2	45.1	151	17.29	6815	3822	1092	-	-	**PS082**	56C
92.0	41.0	166	19.03	6815	3944	1127	-	-	**PS082**	56C
86.9	38.8	176	20.14	6815	4018	1148	-	-	**PS082**	56C
79.1	36.7	193	22.13	7081	4047	1184	-	-	**PS082**	56C/56C
72.9	33.8	210	24.00	7081	4047	1216	-	-	**PS082**	56C
67.2	31.1	227	26.05	7081	4047	1249	-	-	**PS082**	56C
64.1	33.4	238	27.29	7966	4047	1268	-	-	**PS082**	56C
61.0	31.8	250	28.67	7966	4047	1289	-	-	**PS082**	56C
59.1	30.8	258	29.60	7966	4047	1302	-	-	**PS082**	56C
55.1	31.9	277	31.78	8851	4047	1333	-	-	**PS082**	56C
50.1	29.0	305	34.91	8851	4047	1374	-	-	**PS082**	56C/56C
49.3	28.6	310	35.50	8851	4047	1382	-	-	**PS082**	56C
40.6	23.5	376	43.05	8851	4047	1471	-	-	**PS082**	56C
34.8	20.2	439	50.25	8851	4047	1547	-	-	**PS082**	56C/56C
32.2	18.7	474	54.27	8851	4047	1587	-	-	**PS082**	56C
28.2	16.4	541	61.98	8851	4047	1619	-	-	**PS082**	56C
25.9	15.3	577	67.52	8851	4047	1619	-	-	**PS083**	56C
23.6	14.0	634	74.18	8851	4047	1619	-	-	**PS083**	56C/56C
21.4	12.7	698	81.71	8851	4047	1619	-	-	**PS083**	56C
19.1	11.3	782	91.49	8851	4047	1619	-	-	**PS083**	56C
17.4	10.3	860	100.62	8851	4047	1619	-	-	**PS083**	56C
14.9	8.8	1002	117.17	8851	4047	1619	-	-	**PS083**	56C
13.6	8.0	1100	128.73	8851	4047	1619	-	-	**PS083**	56C/56C
12.8	7.6	1165	136.34	8851	4047	1619	-	-	**PS083**	56C
11.0	6.5	1357	158.76	8851	4047	1619	-	-	**PS083**	56C
9.5	5.6	1580	184.88	8851	4047	1619	-	-	**PS083**	56C
8.6	5.1	1736	203.11	8851	4047	1619	-	-	**PS083**	56C/56C
8.5	5.0	1755	205.34	8851	4047	1619	-	-	**PS083**	56C
7.7	4.6	1932	226.04	8851	4047	1619	-	-	**PS083**	56C
7.0	4.1	2141	250.50	8851	4047	1619	-	-	**PS083**	56C
6.6	3.9	2275	266.13	8851	4047	1619	-	-	**PS083**	56C
6.0	3.5	2499	292.36	8851	4047	1619	-	-	**PS083**	56C/56C
5.5	3.3	2699	315.73	8851	4047	1619	-	-	**PS083**	56C
4.9	2.9	3082	360.58	8851	4047	1619	-	-	**PS083**	56C
92.1	74.7	166	19.00	12391	4803	1372	-	-	**PS102**	56C
84.0	68.1	182	20.83	12391	4946	1414	-	-	**PS102**	56C
72.1	62.6	212	24.28	13276	4946	1487	-	-	**PS102**	56C
66.5	57.8	230	26.33	13276	4946	1527	-	-	**PS102**	56C
58.6	50.9	261	29.87	13276	4946	1592	-	-	**PS102**	56C

0.25 HP

Output speed [rpm]	Service factor sf	Output torque [in-lbs]	Exact ratio i	Max. torque [in-lbs]	OHL		Gearmotor		Gear Reducer	
					Output shaft [lbs]	Hollow bore [lbs]	Reducer	Motor	Reducer	NEMA C-input
54.0	46.9	283	32.40	13276	4946	1635	-	-	**PS102**	56C
45.7	39.7	334	38.30	13276	4946	1727	-	-	**PS102**	56C
41.2	33.4	371	42.53	12391	4946	1787	-	-	**PS102**	56C
39.8	30.0	384	44.00	11506	4946	1807	-	-	**PS102**	56C
37.1	34.4	411	47.13	14161	4946	1848	-	-	**PS102**	56C
31.7	23.9	481	55.14	11506	4946	1946	-	-	**PS102**	56C
29.5	27.3	519	59.40	14161	4946	1994	-	-	**PS102**	56C
25.8	23.9	592	67.84	14161	4946	2023	-	-	**PS102**	56C
21.5	20.4	696	81.39	14161	4946	2023	-	-	**PS103**	56C
19.5	18.5	767	89.77	14161	4946	2023	-	-	**PS103**	56C
17.5	16.5	856	100.15	14161	4946	2023	-	-	**PS103**	56C
15.8	15.0	945	110.55	14161	4946	2023	-	-	**PS103**	56C
14.4	13.7	1037	121.29	14161	4946	2023	-	-	**PS103**	56C
12.4	11.7	1207	141.24	14161	4946	2023	-	-	**PS103**	56C
10.1	9.5	1485	173.78	14161	4946	2023	-	-	**PS103**	56C
9.3	8.8	1611	188.51	14161	4946	2023	-	-	**PS103**	56C
7.9	7.4	1905	222.85	14161	4946	2023	-	-	**PS103**	56C
7.8	7.4	1921	224.76	14161	4946	2023	-	-	**PS103**	56C
6.4	6.0	2344	274.20	14161	4946	2023	-	-	**PS103**	56C
6.2	5.9	2401	280.89	14161	4946	2023	-	-	**PS103**	56C
5.5	5.2	2742	320.79	14161	4946	2023	-	-	**PS103**	56C
5.1	4.8	2954	345.60	14161	4946	2023	-	-	**PS103**	56C
4.4	4.2	3374	394.69	14161	4946	2023	-	-	**PS103**	56C

0.33 HP

Output speed [rpm]	Service factor sf	Output torque [in-lbs]	Exact ratio i	Max. torque [in-lbs]	OHL		Gearmotor		Gear Reducer	
					Output shaft [lbs]	Hollow bore [lbs]	Reducer	Motor	Reducer	NEMA C-input
24.0	3.7	831	72.83	3098	1349	1349	**CS052**	71A4	**PS052**	56C
23.6	3.7	829	74.20	3098	1349	1349	**CS053**	63D4/71A4	**PS053**	56C
22.4	3.5	873	78.14	3098	1349	1349	**CS053**	63D4/71A4	**PS053**	56C
18.3	2.9	1071	95.84	3098	1349	1349	**CS053**	63D4/71A4	**PS053**	56C
14.9	2.4	1312	117.48	3098	1349	1349	**CS053**	63D4/71A4	**PS053**	56C
12.7	2.0	1536	137.45	3098	1349	1349	**CS053**	63D4/71A4	**PS053**	56C
9.9	1.6	1983	177.55	3098	1349	1349	**CS053**	63D4/71A4	**PS053**	56C
8.8	1.4	2217	198.45	3098	1349	1349	**CS053**	63D4/71A4	**PS053**	56C
8.0	1.3	2431	217.64	3098	1349	1349	**CS053**	63D4/71A4	**PS053**	56C
6.8	1.1	2864	256.33	3098	1349	1349	**CS053**	63D4/71A4	**PS053**	56C
13.8	3.8	1412	126.43	5310	2248	899	**CS063**	71A4	**PS063**	56C
11.6	3.2	1685	150.85	5310	2248	899	**CS063**	71A4	**PS063**	56C
9.6	2.6	2039	182.53	5310	2248	899	**CS063**	71A4	**PS063**	56C
9.5	2.6	2067	185.05	5310	2248	899	**CS063**	71A4	**PS063**	56C

0.33 HP

Output speed [rpm]	Service factor sf	Output torque [in-lbs]	Exact ratio i	Max. torque [in-lbs]	OHL		Gearmotor		Gear Reducer	
					Output shaft [lbs]	Hollow bore [lbs]	Reducer	Motor	Reducer	NEMA C-input
8.0	2.2	2433	217.79	5310	2248	899	**CS063**	71A4	**PS063**	56C
6.6	1.8	2985	267.16	5310	2248	899	**CS063**	71A4	**PS063**	56C
8.6	3.9	2269	203.11	8851	4047	1619	**CS083**	71A4	**PS083**	56C
8.5	3.9	2294	205.34	8851	4047	1619	**CS083**	71A4	**PS083**	56C
7.7	3.5	2525	226.04	8851	4047	1619	**CS083**	71A4	**PS083**	56C
7.0	3.2	2798	250.50	8851	4047	1619	**CS083**	71A4	**PS083**	56C
6.6	3.0	2973	266.13	8851	4047	1619	**CS083**	71A4	**PS083**	56C
6.0	2.7	3266	292.36	8851	4047	1619	**CS083**	71A4	**PS083**	56C
5.5	2.5	3527	315.73	8851	4047	1619	**CS083**	71A4	**PS083**	56C
4.9	2.2	4028	360.58	8851	4047	1619	**CS083**	71A4	**PS083**	56C
5.5	4.0	3584	320.79	14161	4946	2023	**CS103**	71A4	**PS103**	56C
5.1	3.7	3861	345.60	14161	4946	2023	**CS103**	71A4	**PS103**	56C
4.4	3.2	4409	394.69	14161	4946	2023	**CS103**	71A4	**PS103**	56C

0.5 HP

Output speed [rpm]	Service factor sf	Output torque [in-lbs]	Exact ratio i	Max. torque [in-lbs]	OHL		Gearmotor		Gear Reducer	
					Output shaft [lbs]	Hollow bore [lbs]	Reducer	Motor	Reducer	NEMA C-input
38.0	3.9	795	46.00	3098	1349	1349	**CS052**	71B4	**PS052**	56C
37.1	3.8	816	47.20	3098	1349	1349	**CS052**	71B4	**PS052**	56C
33.5	3.4	903	52.25	3098	1349	1349	**CS052**	71B4	**PS052**	56C
30.2	3.1	1000	57.86	3098	1349	1349	**CS052**	71B4	**PS052**	56C
29.5	3.0	1027	59.42	3098	1349	1349	**CS052**	71B4	**PS052**	56C
24.0	2.5	1259	72.83	3098	1349	1349	**CS052**	71B4	**PS052**	56C
37.1	3.9	798	47.14	3098	1349	1349	**CS053**	71B4	**PS053**	56C
30.3	3.2	978	57.79	3098	1349	1349	**CS053**	71B4	**PS053**	56C
27.5	2.9	1079	63.74	3098	1349	1349	**CS053**	71B4	**PS053**	56C
23.6	2.5	1256	74.20	3098	1349	1349	**CS053**	71B4	**PS053**	56C
22.4	2.3	1323	78.14	3098	1349	1349	**CS053**	71B4	**PS053**	56C
18.3	1.9	1622	95.84	3098	1349	1349	**CS053**	71B4	**PS053**	56C
14.9	1.6	1989	117.48	3098	1349	1349	**CS053**	71B4	**PS053**	56C
12.7	1.3	2327	137.45	3098	1349	1349	**CS053**	71B4	**PS053**	56C
9.9	1.0	3005	177.55	3098	1349	1349	**CS053**	71B4	**PS053**	56C
21.5	3.9	1378	81.43	5310	2248	899	**CS063**	71B4	**PS063**	56C
17.5	3.1	1691	99.89	5310	2248	899	**CS063**	71B4	**PS063**	56C
13.8	2.5	2140	126.43	5310	2248	899	**CS063**	71B4	**PS063**	56C
11.6	2.1	2553	150.85	5310	2248	899	**CS063**	71B4	**PS063**	56C
9.6	1.7	3090	182.53	5310	2248	899	**CS063**	71B4	**PS063**	56C
9.5	1.7	3132	185.05	5310	2248	899	**CS063**	71B4	**PS063**	56C
8.0	1.4	3687	217.79	5310	2248	899	**CS063**	71B4	**PS063**	56C
6.6	1.2	4522	267.16	5310	2248	899	**CS063**	71B4	**PS063**	56C
12.8	3.8	2308	136.34	8851	4047	1619	**CS083**	71B4	**PS083**	56C

0.5 HP

Output speed [rpm]	Service factor sf	Output torque [in-lbs]	Exact ratio i	Max. torque [in-lbs]	OHL		Gearmotor		Gear Reducer	
					Output shaft [lbs]	Hollow bore [lbs]	Reducer	Motor	Reducer	NEMA C-input
11.0	3.3	2687	158.76	8851	4047	1619	**CS083**	71B4	**PS083**	56C
9.5	2.8	3129	184.88	8851	4047	1619	**CS083**	71B4	**PS083**	56C
8.6	2.6	3438	203.11	8851	4047	1619	**CS083**	71B4	**PS083**	56C
8.5	2.5	3476	205.34	8851	4047	1619	**CS083**	71B4	**PS083**	56C
7.7	2.3	3826	226.04	8851	4047	1619	**CS083**	71B4	**PS083**	56C
7.0	2.1	4240	250.50	8851	4047	1619	**CS083**	71B4	**PS083**	56C
6.6	2.0	4505	266.13	8851	4047	1619	**CS083**	71B4	**PS083**	56C
6.0	1.8	4949	292.36	8851	4047	1619	**CS083**	71B4/71B4	**PS083**	56C
5.5	1.7	5344	315.73	8851	4047	1619	**CS083**	71B4	**PS083**	56C
4.9	1.5	6103	360.58	8851	4047	1619	**CS083**	71B4	**PS083**	56C
7.9	3.8	3772	222.85	14161	4946	2023	**CS103**	71B4	**PS103**	56C
7.8	3.7	3804	224.76	14161	4946	2023	**CS103**	71B4	**PS103**	56C
6.4	3.1	4641	274.20	14161	4946	2023	**CS103**	71B4	**PS103**	56C
6.2	3.0	4755	280.89	14161	4946	2023	**CS103**	71B4	**PS103**	56C
6.0	2.8	4998	292.36	14161	4946	2023	**-**	-	**PS103**	56C
5.5	2.6	5430	320.79	14161	4946	2023	**CS103**	71B4	**PS103**	56C
5.1	2.4	5850	345.60	14161	4946	2023	**CS103**	71B4	**PS103**	56C
4.4	2.1	6681	394.69	14161	4946	2023	**CS103**	71B4	**PS103**	56C

0.75 HP

Output speed [rpm]	Service factor sf	Output torque [in-lbs]	Exact ratio i	Max. torque [in-lbs]	OHL		Gearmotor		Gear Reducer	
					Output shaft [lbs]	Hollow bore [lbs]	Reducer	Motor	Reducer	NEMA C-input
72.7	3.7	624	24.07	2301	1186	1186	**CS052**	71C4/80A4	**PS052**	56C
69.4	3.9	653	25.20	2567	1202	1202	**CS052**	71C4/80A4	**PS052**	56C
67.9	3.8	669	25.79	2567	1209	1209	**CS052**	71C4/80A4	**PS052**	56C
62.9	3.6	721	27.81	2567	1234	1234	**CS052**	71C4/80A4	**PS052**	56C
58.3	3.3	778	30.00	2567	1260	1260	**CS052**	71C4/80A4	**PS052**	56C
53.8	3.1	844	32.55	2655	1288	1288	**CS052**	71C4/80A4	**PS052**	56C
53.0	3.1	856	33.00	2655	1293	1293	**CS052**	71C4/80A4	**PS052**	56C
51.3	3.0	884	34.09	2655	1304	1304	**CS052**	71C4/80A4	**PS052**	56C
47.9	3.1	948	36.55	2921	1328	1328	**CS052**	71C4/80A4	**PS052**	56C
45.2	2.9	1005	38.75	2921	1348	1348	**CS052**	71C4/80A4	**PS052**	56C
43.9	3.0	1035	39.90	3098	1349	1349	**CS052**	71C4/80A4	**PS052**	56C
41.1	2.8	1105	42.63	3098	1349	1349	**CS052**	71C4/80A4	**PS052**	56C
38.0	2.6	1193	46.00	3098	1349	1349	**CS052**	71C4/80A4	**PS052**	56C
37.1	2.5	1224	47.20	3098	1349	1349	**CS052**	71C4/80A4	**PS052**	56C
33.5	2.3	1355	52.25	3098	1349	1349	**CS052**	71C4/80A4	**PS052**	56C
30.2	2.1	1500	57.86	3098	1349	1349	**CS052**	71C4/80A4	**PS052**	56C
29.5	2.0	1541	59.42	3098	1349	1349	**CS052**	71C4/80A4	**PS052**	56C
24.0	1.6	1889	72.83	3098	1349	1349	**CS052**	71C4/80A4	**PS052**	56C
47.9	3.3	927	36.50	3098	1330	1330	**CS053**	71C4/80A4	**PS053**	56C

0.75 HP

Output speed [rpm]	Service factor sf	Output torque [in-lbs]	Exact ratio i	Max. torque [in-lbs]	OHL		Gearmotor		Gear Reducer	
					Output shaft [lbs]	Hollow bore [lbs]	Reducer	Motor	Reducer	NEMA C-input
37.1	2.6	1197	47.14	3098	1349	1349	**CS053**	71C4/80A4	**PS053**	56C
30.3	2.1	1467	57.79	3098	1349	1349	**CS053**	71C4/80A4	**PS053**	56C
27.5	1.9	1618	63.74	3098	1349	1349	**CS053**	71C4/80A4	**PS053**	56C
23.6	1.6	1884	74.20	3098	1349	1349	**CS053**	71C4/80A4	**PS053**	56C
22.4	1.6	1984	78.14	3098	1349	1349	**CS053**	71C4/80A4	**PS053**	56C
18.3	1.3	2433	95.84	3098	1349	1349	**CS053**	71C4/80A4	**PS053**	56C
14.9	1.0	2983	117.48	3098	1349	1349	**CS053**	71C4/80A4	**PS053**	56C
32.7	3.8	1388	53.53	5310	2248	899	**CS062**	71C4/80A4	**PS062**	56C
31.8	3.7	1426	55.00	5310	2248	899	**CS062**	71C4/80A4	**PS062**	56C
25.9	3.0	1749	67.47	5310	2248	899	**CS062**	71C4/80A4	**PS062**	56C
31.7	3.8	1404	55.29	5310	2248	899	**CS063**	71C4/80A4	**PS063**	56C
29.8	3.6	1491	58.72	5310	2248	899	**CS063**	71C4/80A4	**PS063**	56C
26.6	3.2	1672	65.85	5310	2248	899	**CS063**	71C4/80A4	**PS063**	56C
25.6	3.1	1733	68.25	5310	2248	899	**CS063**	71C4/80A4	**PS063**	56C
23.8	2.8	1869	73.63	5310	2248	899	**CS063**	71C4/80A4	**PS063**	56C
21.5	2.6	2068	81.43	5310	2248	899	**CS063**	71C4/80A4	**PS063**	56C
17.5	2.1	2536	99.89	5310	2248	899	**CS063**	71C4/80A4	**PS063**	56C
13.8	1.7	3210	126.43	5310	2248	899	**CS063**	71C4/80A4	**PS063**	56C
11.6	1.4	3830	150.85	5310	2248	899	**CS063**	71C4/80A4	**PS063**	56C
9.6	1.1	4634	182.53	5310	2248	899	**CS063**	71C4/80A4	**PS063**	56C
9.5	1.1	4698	185.05	5310	2248	899	**CS063**	71C4/80A4	**PS063**	56C
19.1	3.8	2323	91.49	8851	4047	1619	**CS083**	80A4	**PS083**	56C
17.4	3.5	2555	100.62	8851	4047	1619	**CS083**	80A4	**PS083**	56C
14.9	3.0	2975	117.17	8851	4047	1619	**CS083**	71C4/80A4	**PS083**	56C
13.6	2.7	3268	128.73	8851	4047	1619	**CS083**	71C4/80A4	**PS083**	56C
12.8	2.6	3462	136.34	8851	4047	1619	**CS083**	71C4/80A4	**PS083**	56C
11.0	2.2	4031	158.76	8851	4047	1619	**CS083**	71C4/80A4	**PS083**	56C
9.5	1.9	4694	184.88	8851	4047	1619	**CS083**	71C4/80A4	**PS083**	56C
8.6	1.7	5157	203.11	8851	4047	1619	**CS083**	71C4/80A4/71C4/80A4	**PS083**	56C
8.5	1.7	5214	205.34	8851	4047	1619	**CS083**	71C4/80A4	**PS083**	56C
7.7	1.5	5739	226.04	8851	4047	1619	**CS083**	71C4/80A4	**PS083**	56C
7.0	1.4	6360	250.50	8851	4047	1619	**CS083**	71C4/80A4	**PS083**	56C
6.6	1.3	6757	266.13	8851	4047	1619	**CS083**	71C4/80A4	**PS083**	56C
6.0	1.2	7423	292.36	8851	4047	1619	**CS083**	71C4/80A4/71C4/80A4	**PS083**	56C
5.5	1.1	8016	315.73	8851	4047	1619	**CS083**	71C4/80A4	**PS083**	56C
12.4	3.9	3586	141.24	14161	4946	2023	**CS103**	71C4/80A4	**PS103**	56C
10.1	3.2	4412	173.78	14161	4946	2023	**CS103**	71C4/80A4	**PS103**	56C
9.3	3.0	4786	188.51	14161	4946	2023	**CS103**	71C4/80A4	**PS103**	56C
8.6	2.7	5208	203.11	14161	4946	2023	**-**	-	**PS103**	56C
7.9	2.5	5658	222.85	14161	4946	2023	**CS103**	71C4/80A4	**PS103**	56C
7.8	2.5	5707	224.76	14161	4946	2023	**CS103**	71C4/80A4	**PS103**	56C

0.75 HP

Output speed [rpm]	Service factor sf	Output torque [in-lbs]	Exact ratio i	Max. torque [in-lbs]	OHL		Gearmotor		Gear Reducer	
					Output shaft [lbs]	Hollow bore [lbs]	Reducer	Motor	Reducer	NEMA C-input
6.4	2.0	6962	274.20	14161	4946	2023	**CS103**	71C4/80A4	**PS103**	56C
6.2	2.0	7132	280.89	14161	4946	2023	**CS103**	71C4/80A4	**PS103**	56C
6.0	1.9	7497	292.36	14161	4946	2023	**-**	-	**PS103**	56C
5.5	1.7	8145	320.79	14161	4946	2023	**CS103**	71C4/80A4	**PS103**	56C
5.1	1.6	8775	345.60	14161	4946	2023	**CS103**	71C4/80A4	**PS103**	56C
4.4	1.4	10021	394.69	14161	4946	2023	**CS103**	71C4/80A4	**PS103**	56C
6.2	3.7	7112	280.10	26552	6744	2518	**CS123**	80A4	**-**	-
5.8	3.5	7646	301.16	26552	6744	2518	**CS123**	80A4	**-**	-
5.1	3.0	8732	343.93	26552	6744	2518	**CS123**	80A4	**-**	-

1 HP

Output speed [rpm]	Service factor sf	Output torque [in-lbs]	Exact ratio i	Max. torque [in-lbs]	OHL		Gearmotor		Gear Reducer	
					Output shaft [lbs]	Hollow bore [lbs]	Reducer	Motor	Reducer	NEMA C-input
128.1	3.9	472	13.66	1859	991	991	**CS052**	80B4	**PS052**	56C/143/145TC
114.6	4.0	533	15.27	2124	1022	1022	**-**	-	**PS052**	56C/143/145TC
107.5	3.8	563	16.29	2124	1041	1041	**CS052**	80B4	**PS052**	56C/143/145TC
93.9	3.3	644	18.63	2124	1080	1080	**CS052**	80B4	**PS052**	56C/143/145TC
88.7	3.1	682	19.73	2124	1097	1097	**CS052**	80B4	**PS052**	56C/143/145TC
83.2	3.2	727	21.04	2301	1116	1116	**CS052**	80B4	**PS052**	56C/143/145TC
81.3	3.1	744	21.53	2301	1122	1122	**CS052**	80B4	**PS052**	56C/143/145TC
72.7	2.8	832	24.07	2301	1156	1156	**CS052**	80B4	**PS052**	56C/143/145TC
69.4	2.9	871	25.20	2567	1169	1169	**CS052**	80B4	**PS052**	56C/143/145TC
67.9	2.9	892	25.79	2567	1176	1176	**CS052**	80B4	**PS052**	56C/143/145TC
62.9	2.7	961	27.81	2567	1199	1199	**CS052**	80B4	**PS052**	56C/143/145TC
58.3	2.5	1037	30.00	2567	1222	1222	**CS052**	80B4	**PS052**	56C/143/145TC
53.8	2.4	1125	32.55	2655	1246	1246	**CS052**	80B4	**PS052**	56C/143/145TC
53.0	2.3	1141	33.00	2655	1250	1250	**CS052**	80B4	**PS052**	56C/143/145TC
51.3	2.3	1179	34.09	2655	1260	1260	**CS052**	80B4	**PS052**	56C/143/145TC
47.9	2.3	1264	36.55	2921	1281	1281	**CS052**	80B4	**PS052**	56C/143/145TC
45.2	2.2	1340	38.75	2921	1298	1298	**CS052**	80B4	**PS052**	56C/143/145TC
43.9	2.2	1379	39.90	3098	1307	1307	**CS052**	80B4	**PS052**	56C/143/145TC
41.1	2.1	1474	42.63	3098	1326	1326	**CS052**	80B4	**PS052**	56C/143/145TC
38.0	1.9	1590	46.00	3098	1348	1348	**CS052**	80B4	**PS052**	56C/143/145TC
37.1	1.9	1632	47.20	3098	1349	1349	**CS052**	80B4	**PS052**	56C/143/145TC
33.5	1.7	1806	52.25	3098	1349	1349	**CS052**	80B4	**PS052**	56C/143/145TC
30.2	1.5	2001	57.86	3098	1349	1349	**CS052**	80B4	**PS052**	56C/143/145TC
29.5	1.5	2054	59.42	3098	1349	1349	**CS052**	80B4	**PS052**	56C/143/145TC
24.0	1.2	2518	72.83	3098	1349	1349	**CS052**	80B4	**PS052**	56C/143/145TC
47.9	2.5	1236	36.50	3098	1284	1284	**CS053**	80B4	**PS053**	56C/143/145TC
37.1	1.9	1596	47.14	3098	1349	1349	**CS053**	80B4	**PS053**	56C/143/145TC
30.3	1.6	1956	57.79	3098	1349	1349	**CS053**	80B4	**PS053**	56C/143/145TC

1 HP

Output speed [rpm]	Service factor sf	Output torque [in-lbs]	Exact ratio i	Max. torque [in-lbs]	OHL		Gearmotor		Gear Reducer	
					Output shaft [lbs]	Hollow bore [lbs]	Reducer	Motor	Reducer	NEMA C-input
27.5	1.4	2158	63.74	3098	1349	1349	**CS053**	80B4	**PS053**	56C/143/145TC
23.6	1.2	2512	74.20	3098	1349	1349	**CS053**	80B4	**PS053**	56C/143/145TC
22.4	1.2	2645	78.14	3098	1349	1349	**CS053**	80B4	**PS053**	56C/143/145TC
44.4	3.9	1361	39.38	5310	2248	899	**CS062**	80B4	**PS062**	56C/143/145TC
40.1	3.5	1509	43.64	5310	2248	899	**CS062**	80B4	**PS062**	56C/143/145TC
38.0	3.3	1594	46.10	5310	2248	899	**CS062**	80B4	**PS062**	56C/143/145TC
36.2	3.2	1670	48.30	5310	2248	899	**CS062**	80B4	**PS062**	56C/143/145TC
32.7	2.9	1851	53.53	5310	2248	899	**CS062**	80B4	**PS062**	56C/143/145TC
31.8	2.8	1902	55.00	5310	2248	899	**CS062**	80B4	**PS062**	56C/143/145TC
25.9	2.3	2333	67.47	5310	2248	899	**CS062**	80B4	**PS062**	56C/143/145TC
43.7	3.9	1356	40.05	5310	2248	899	**CS063**	80B4	**PS063**	56C/143/145TC
35.6	3.2	1663	49.13	5310	2248	899	**CS063**	80B4	**PS063**	56C/143/145TC
31.7	2.8	1872	55.29	5310	2248	899	**CS063**	80B4	**PS063**	56C/143/145TC
29.8	2.7	1988	58.72	5310	2248	899	**CS063**	80B4	**PS063**	56C/143/145TC
26.6	2.4	2229	65.85	5310	2248	899	**CS063**	80B4	**PS063**	56C/143/145TC
25.6	2.3	2310	68.25	5310	2248	899	**CS063**	80B4	**PS063**	56C/143/145TC
23.8	2.1	2492	73.63	5310	2248	899	**CS063**	80B4	**PS063**	56C/143/145TC
21.5	1.9	2757	81.43	5310	2248	899	**CS063**	80B4	**PS063**	56C/143/145TC
17.5	1.6	3382	99.89	5310	2248	899	**CS063**	80B4	**PS063**	56C/143/145TC
13.8	1.2	4280	126.43	5310	2248	899	**CS063**	80B4	**PS063**	56C/143/145TC
11.6	1.0	5107	150.85	5310	2248	899	**CS063**	80B4	**PS063**	56C/143/145TC
25.9	3.9	2286	67.52	8851	4047	1619	**CS083**	80B4	**PS083**	56C/143/145TC
23.6	3.5	2511	74.18	8851	4047	1619	**CS083**	80B4	**PS083**	56C/143/145TC
21.4	3.2	2766	81.71	8851	4047	1619	**CS083**	80B4	**PS083**	56C/143/145TC
19.1	2.9	3097	91.49	8851	4047	1619	**CS083**	80B4	**PS083**	56C/143/145TC
17.4	2.6	3406	100.62	8851	4047	1619	**CS083**	80B4	**PS083**	56C/143/145TC
14.9	2.2	3967	117.17	8851	4047	1619	**CS083**	80B4	**PS083**	56C/143/145TC
13.6	2.0	4358	128.73	8851	4047	1619	**CS083**	80B4/80B4	**PS083**	56C/143/145TC
12.8	1.9	4616	136.34	8851	4047	1619	**CS083**	80B4	**PS083**	56C/143/145TC
11.0	1.6	5375	158.76	8851	4047	1619	**CS083**	80B4	**PS083**	56C/143/145TC
9.5	1.4	6259	184.88	8851	4047	1619	**CS083**	80B4	**PS083**	56C/143/145TC
8.6	1.3	6876	203.11	8851	4047	1619	**CS083**	80B4/80B4	**PS083**	56C/143/145TC
8.5	1.3	6951	205.34	8851	4047	1619	**CS083**	80B4	**PS083**	56C/143/145TC
7.7	1.2	7652	226.04	8851	4047	1619	**CS083**	80B4	**PS083**	56C/143/145TC
7.0	1.0	8480	250.50	8851	4047	1619	**CS083**	80B4	**PS083**	56C/143/145TC
15.8	3.8	3742	110.55	14161	4946	2023	**CS103**	80B4	**PS103**	56C/143/145TC
14.4	3.4	4106	121.29	14161	4946	2023	**CS103**	80B4	**PS103**	56C/143/145TC
13.6	3.2	4401	128.73	14161	4946	2023	**-**	-	**PS103**	56C/143/145TC
12.4	3.0	4782	141.24	14161	4946	2023	**CS103**	80B4	**PS103**	56C/143/145TC
10.1	2.4	5883	173.78	14161	4946	2023	**CS103**	80B4	**PS103**	56C/143/145TC
9.3	2.2	6382	188.51	14161	4946	2023	**CS103**	80B4	**PS103**	56C/143/145TC

1 HP

Output speed [rpm]	Service factor sf	Output torque [in-lbs]	Exact ratio i	Max. torque [in-lbs]	OHL		Gearmotor		Gear Reducer	
					Output shaft [lbs]	Hollow bore [lbs]	Reducer	Motor	Reducer	NEMA C-input
8.6	2.0	6945	203.11	14161	4946	2023	**-**	-	**PS103**	56C/143/145TC
7.9	1.9	7544	222.85	14161	4946	2023	**CS103**	80B4	**PS103**	56C/143/145TC
7.8	1.9	7609	224.76	14161	4946	2023	**CS103**	80B4	**PS103**	56C/143/145TC
6.4	1.5	9282	274.20	14161	4946	2023	**CS103**	80B4	**PS103**	56C/143/145TC
6.2	1.5	9509	280.89	14161	4946	2023	**CS103**	80B4	**PS103**	56C/143/145TC
6.0	1.4	9898	292.36	14161	4946	2023	**CS103**	80B4	**PS103**	56C/143/145TC
5.5	1.3	10860	320.79	14161	4946	2023	**CS103**	80B4	**PS103**	56C/143/145TC
5.1	1.2	11700	345.60	14161	4946	2023	**CS103**	80B4	**PS103**	56C/143/145TC
4.4	1.1	13362	394.69	14161	4946	2023	**CS103**	80B4	**PS103**	56C/143/145TC
9.0	4.0	6653	194.59	26552	6744	2518	**-**	-	**PS123**	143/145TC
8.1	3.6	7299	215.60	26552	6744	2518	**CS123**	80B4	**PS123**	143/145TC
7.3	3.3	8089	238.93	26552	6744	2518	**CS123**	80B4	**PS123**	143/145TC
6.8	3.1	8651	255.54	26552	6744	2518	**CS123**	80B4	**PS123**	143/145TC
6.2	2.8	9482	280.10	26552	6744	2518	**CS123**	80B4	**PS123**	143/145TC
5.8	2.6	10195	301.16	26552	6744	2518	**CS123**	80B4	**PS123**	143/145TC
5.1	2.3	11643	343.93	26552	6744	2518	**CS123**	80B4	**PS123**	143/145TC

1.5 HP

Output speed [rpm]	Service factor sf	Output torque [in-lbs]	Exact ratio i	Max. torque [in-lbs]	OHL		Gearmotor		Gear Reducer	
					Output shaft [lbs]	Hollow bore [lbs]	Reducer	Motor	Reducer	NEMA C-input
202.9	3.4	447	8.63	1505	845	845	**CS052**	80D4/90S4	**PS052**	56C/143/145TC
157.1	2.9	578	11.14	1682	906	906	**CS052**	80D4/90S4	**PS052**	56C/143/145TC
145.8	2.8	622	12.00	1770	924	924	**CS052**	80D4/90S4	**PS052**	56C/143/145TC
128.1	2.6	708	13.66	1859	956	956	**CS052**	80D4/90S4	**PS052**	56C/143/145TC
114.6	2.7	792	15.27	2124	983	983	**CS052**	80D4/90S4	**PS052**	56C/143/145TC
107.5	2.5	845	16.29	2124	999	999	**CS052**	80D4/90S4	**PS052**	56C/143/145TC
93.9	2.2	966	18.63	2124	1032	1032	**CS052**	80D4/90S4	**PS052**	56C/143/145TC
88.7	2.1	1023	19.73	2124	1046	1046	**CS052**	80D4/90S4	**PS052**	56C/143/145TC
83.2	2.1	1091	21.04	2301	1062	1062	**CS052**	80D4/90S4	**PS052**	56C/143/145TC
81.3	2.1	1117	21.53	2301	1068	1068	**CS052**	80D4/90S4	**PS052**	56C/143/145TC
72.7	1.8	1248	24.07	2301	1094	1094	**CS052**	80D4/90S4	**PS052**	56C/143/145TC
69.4	2.0	1307	25.20	2567	1105	1105	**CS052**	80D4/90S4	**PS052**	56C/143/145TC
67.9	1.9	1337	25.79	2567	1111	1111	**CS052**	80D4/90S4	**PS052**	56C/143/145TC
62.9	1.8	1442	27.81	2567	1128	1128	**CS052**	80D4/90S4	**PS052**	56C/143/145TC
58.3	1.6	1556	30.00	2567	1145	1145	**CS052**	80D4/90S4/80D4/90S4	**PS052**	56C/143/145TC
53.8	1.6	1688	32.55	2655	1163	1163	**CS052**	80D4/90S4	**PS052**	56C/143/145TC
53.0	1.6	1711	33.00	2655	1166	1166	**CS052**	80D4/90S4	**PS052**	56C/143/145TC
51.3	1.5	1768	34.09	2655	1173	1173	**CS052**	80D4/90S4	**PS052**	56C/143/145TC
47.9	1.5	1895	36.55	2921	1188	1188	**CS052**	80D4/90S4	**PS052**	56C/143/145TC
45.2	1.5	2010	38.75	2921	1200	1200	**CS052**	80D4/90S4	**PS052**	56C/143/145TC
43.9	1.5	2069	39.90	3098	1205	1205	**CS052**	80D4/90S4	**PS052**	56C/143/145TC

1.5 HP

Output speed [rpm]	Service factor sf	Output torque [in-lbs]	Exact ratio i	Max. torque [in-lbs]	OHL		Gearmotor		Gear Reducer	
					Output shaft [lbs]	Hollow bore [lbs]	Reducer	Motor	Reducer	NEMA C-input
41.1	1.4	2211	42.63	3098	1218	1218	**CS052**	80D4/90S4	**PS052**	56C/143/145TC
38.0	1.3	2386	46.00	3098	1231	1231	**CS052**	80D4/90S4	**PS052**	56C/143/145TC
37.1	1.3	2448	47.20	3098	1236	1236	**CS052**	80D4/90S4	**PS052**	56C/143/145TC
33.5	1.1	2710	52.25	3098	1251	1251	**CS052**	80D4/90S4	**PS052**	56C/143/145TC
30.2	1.0	3001	57.86	3098	1265	1265	**CS052**	80D4/90S4	**PS052**	56C/143/145TC
29.5	1.0	3081	59.42	3098	1268	1268	**CS052**	80D4/90S4	**-**	-
47.9	1.7	1853	36.50	3098	1193	1193	**CS053**	80D4/90S4	**PS053**	56C/143/145TC
37.1	1.3	2394	47.14	3098	1243	1243	**CS053**	80D4/90S4	**PS053**	56C/143/145TC
30.3	1.1	2934	57.79	3098	1274	1274	**CS053**	80D4/90S4	**PS053**	56C/143/145TC
90.7	4.0	1000	19.29	3983	1882	753	**CS062**	80D4/90S4	**PS062**	56C/143/145TC
89.5	4.0	1024	19.55	4071	1887	755	**-**	-	**PS062**	56C/143/145TC
75.5	3.5	1202	23.18	4160	1977	791	**CS062**	80D4/90S4	**PS062**	56C/143/145TC
73.7	3.4	1232	23.75	4160	1990	796	**CS062**	80D4/90S4	**PS062**	56C/143/145TC
69.6	3.3	1304	25.14	4248	2020	808	**CS062**	80D4/90S4	**PS062**	56C/143/145TC
63.3	3.0	1434	27.66	4248	2070	828	**CS062**	80D4/90S4	**PS062**	56C/143/145TC
58.3	2.8	1571	30.00	4425	2111	844	**-**	-	**PS062**	56C/143/145TC
51.6	2.7	1759	33.93	4779	2178	871	**CS062**	80D4/90S4	**PS062**	56C/143/145TC
47.9	2.8	1897	36.57	5310	2218	887	**CS062**	80D4/90S4	**PS062**	56C/143/145TC
44.4	2.6	2042	39.38	5310	2248	899	**CS062**	80D4/90S4	**PS062**	56C/143/145TC
40.1	2.3	2263	43.64	5310	2248	899	**CS062**	80D4/90S4	**PS062**	56C/143/145TC
38.0	2.2	2391	46.10	5310	2248	899	**CS062**	80D4/90S4	**PS062**	56C/143/145TC
36.2	2.1	2505	48.30	5310	2248	899	**CS062**	80D4/90S4	**PS062**	56C/143/145TC
32.7	1.9	2776	53.53	5310	2248	899	**CS062**	80D4/90S4	**PS062**	56C/143/145TC
31.8	1.9	2852	55.00	5310	2248	899	**CS062**	80D4/90S4	**PS062**	56C/143/145TC
25.9	1.5	3499	67.47	5310	2248	899	**CS062**	80D4/90S4	**PS062**	56C/143/145TC
52.1	3.1	1705	33.57	5310	2179	871	**CS063**	80D4/90S4	**PS063**	56C/143/145TC
46.3	2.8	1918	37.77	5310	2242	897	**CS063**	80D4/90S4	**PS063**	56C/143/145TC
43.7	2.6	2034	40.05	5310	2248	899	**CS063**	80D4/90S4	**PS063**	56C/143/145TC
35.6	2.1	2495	49.13	5310	2248	899	**CS063**	80D4/90S4	**PS063**	56C/143/145TC
31.7	1.9	2807	55.29	5310	2248	899	**CS063**	80D4/90S4	**PS063**	56C/143/145TC
29.8	1.8	2982	58.72	5310	2248	899	**CS063**	80D4/90S4	**PS063**	56C/143/145TC
26.6	1.6	3344	65.85	5310	2248	899	**CS063**	80D4/90S4	**PS063**	56C/143/145TC
25.6	1.5	3466	68.25	5310	2248	899	**CS063**	80D4/90S4	**PS063**	56C/143/145TC
23.8	1.4	3739	73.63	5310	2248	899	**CS063**	80D4/90S4	**PS063**	56C/143/145TC
21.5	1.3	4135	81.43	5310	2248	899	**CS063**	80D4/90S4	**PS063**	56C/143/145TC
17.5	1.0	5072	99.89	5310	2248	899	**CS063**	80D4/90S4	**PS063**	56C/143/145TC
40.6	4.0	2233	43.05	8851	4047	1427	**CS082**	80D4/90S4	**PS082**	56C/143/145TC
34.8	3.4	2606	50.25	8851	4047	1496	**CS082**	80D4/90S4	**PS082**	56C/143/145TC
32.2	3.1	2814	54.27	8851	4047	1531	**CS082**	80D4/90S4	**PS082**	56C/143/145TC
28.2	2.8	3214	61.98	8851	4047	1593	**CS082**	80D4/90S4	**PS082**	56C/143/145TC
25.9	2.6	3429	67.52	8851	4047	1619	**CS083**	80D4/90S4	**PS083**	56C/143/145TC

5.1 S GEARED MOTORS

1.5 HP

Output speed [rpm]	Service factor sf	Output torque [in-lbs]	Exact ratio i	Max. torque [in-lbs]	OHL		Gearmotor		Gear Reducer	
					Output shaft [lbs]	Hollow bore [lbs]	Reducer	Motor	Reducer	NEMA C-input
23.6	2.3	3767	74.18	8851	4047	1619	**CS083**	80D4/90S4/80D4/90S4	**PS083**	56C/143/145TC
21.4	2.1	4149	81.71	8851	4047	1619	**CS083**	80D4/90S4	**PS083**	56C/143/145TC
19.1	1.9	4646	91.49	8851	4047	1619	**CS083**	80D4/90S4	**PS083**	56C/143/145TC
17.4	1.7	5110	100.62	8851	4047	1619	**CS083**	80D4/90S4	**PS083**	56C/143/145TC
14.9	1.5	5950	117.17	8851	4047	1619	**CS083**	80D4/90S4	**PS083**	56C/143/145TC
13.6	1.4	6537	128.73	8851	4047	1619	**CS083**	80D4/90S4/80D4/90S4	**PS083**	56C/143/145TC
12.8	1.3	6923	136.34	8851	4047	1619	**CS083**	80D4/90S4	**PS083**	56C/143/145TC
11.0	1.1	8062	158.76	8851	4047	1619	**CS083**	80D4/90S4	**PS083**	56C/143/145TC
31.7	4.0	2888	55.14	11506	4946	1900	**-**	-	**PS102**	56C/143/145TC
25.8	4.0	3553	67.84	14161	4946	2023	**-**	-	**PS102**	56C/143/145TC
23.6	3.7	3805	74.18	14161	4946	2023	**-**	-	**PS103**	56C/143/145TC
21.5	3.4	4133	81.39	14161	4946	2023	**CS103**	80D4/90S4	**PS103**	56C/143/145TC
19.5	3.1	4558	89.77	14161	4946	2023	**CS103**	80D4/90S4	**PS103**	56C/143/145TC
17.5	2.8	5085	100.15	14161	4946	2023	**CS103**	80D4/90S4	**PS103**	56C/143/145TC
15.8	2.5	5614	110.55	14161	4946	2023	**CS103**	80D4/90S4	**PS103**	56C/143/145TC
14.4	2.3	6159	121.29	14161	4946	2023	**CS103**	80D4/90S4	**PS103**	56C/143/145TC
13.6	2.1	6602	128.73	14161	4946	2023	**-**	-	**PS103**	56C/143/145TC
12.4	2.0	7172	141.24	14161	4946	2023	**CS103**	80D4/90S4	**PS103**	56C/143/145TC
10.1	1.6	8825	173.78	14161	4946	2023	**CS103**	80D4/90S4	**PS103**	56C/143/145TC
9.3	1.5	9573	188.51	14161	4946	2023	**CS103**	80D4/90S4	**PS103**	56C/143/145TC
8.6	1.4	10314	203.11	14161	4946	2023	**CS103**	80D4/90S4	**PS103**	56C/143/145TC
7.9	1.3	11317	222.85	14161	4946	2023	**CS103**	80D4/90S4	**PS103**	56C/143/145TC
7.8	1.2	11413	224.76	14161	4946	2023	**CS103**	80D4/90S4	**PS103**	56C/143/145TC
6.4	1.0	13924	274.20	14161	4946	2023	**CS103**	80D4/90S4	**PS103**	56C/143/145TC
13.5	4.0	6670	130.04	26552	6744	2518	**-**	-	**PS123**	143/145TC
13.1	3.9	6793	133.78	26552	6744	2518	**CS123**	80D4/90S4	**PS123**	143/145TC
11.6	3.5	7690	151.43	26552	6744	2518	**CS123**	80D4/90S4	**PS123**	143/145TC
9.9	2.9	9015	177.53	26552	6744	2518	**CS123**	80D4/90S4	**PS123**	143/145TC
9.0	2.7	9881	194.59	26552	6744	2518	**CS123**	80D4/90S4	**PS123**	143/145TC
8.1	2.4	10948	215.60	26552	6744	2518	**CS123**	80D4/90S4	**PS123**	143/145TC
7.3	2.2	12133	238.93	26552	6744	2518	**CS123**	80D4/90S4	**PS123**	143/145TC
6.8	2.0	12977	255.54	26552	6744	2518	**CS123**	80D4/90S4	**PS123**	143/145TC
6.2	1.9	14223	280.10	26552	6744	2518	**CS123**	80D4/90S4	**PS123**	143/145TC
5.8	1.7	15293	301.16	26552	6744	2518	**CS123**	80D4/90S4	**PS123**	143/145TC
5.1	1.5	17465	343.93	26552	6744	2518	**CS123**	80D4/90S4	**PS123**	143/145TC

2 HP

Output speed [rpm]	Service factor sf	Output torque [in-lbs]	Exact ratio i	Max. torque [in-lbs]	OHL		Gearmotor		Gear Reducer	
					Output shaft [lbs]	Hollow bore [lbs]	Reducer	Motor	Reducer	NEMA C-input
202.9	2.5	596	8.63	1505	823	823	**CS052**	90L4/90LA4	**PS052**	56C/143/145TC
157.1	2.2	770	11.14	1682	878	878	**CS052**	90L4/90LA4	**PS052**	56C/143/145TC

2 HP

Output speed [rpm]	Service factor sf	Output torque [in-lbs]	Exact ratio i	Max. torque [in-lbs]	OHL		Gearmotor		Gear Reducer	
					Output shaft [lbs]	Hollow bore [lbs]	Reducer	Motor	Reducer	NEMA C-input
145.8	2.1	830	12.00	1770	894	894	**CS052**	90L4/90LA4	**PS052**	56C/143/145TC
128.1	2.0	944	13.66	1859	921	921	**CS052**	90L4/90LA4	**PS052**	56C/143/145TC
114.6	2.0	1056	15.27	2124	944	944	**CS052**	90L4/90LA4	**PS052**	56C/143/145TC
107.5	1.9	1126	16.29	2124	958	958	**CS052**	90L4/90LA4	**PS052**	56C/143/145TC
93.9	1.6	1288	18.63	2124	985	985	**CS052**	90L4/90LA4	**PS052**	56C/143/145TC
88.7	1.6	1364	19.73	2124	996	996	**CS052**	90L4/90LA4	**PS052**	56C/143/145TC
83.2	1.6	1455	21.04	2301	1008	1008	**CS052**	90L4/90LA4	**PS052**	56C/143/145TC
81.3	1.5	1489	21.53	2301	1013	1013	**CS052**	90L4/90LA4	**PS052**	56C/143/145TC
72.7	1.4	1664	24.07	2301	1033	1033	**CS052**	90L4/90LA4	**PS052**	56C/143/145TC
69.4	1.5	1743	25.20	2567	1041	1041	**CS052**	90L4/90LA4	**PS052**	56C/143/145TC
67.9	1.4	1783	25.79	2567	1045	1045	**CS052**	90L4/90LA4	**PS052**	56C/143/145TC
62.9	1.3	1923	27.81	2567	1057	1057	**CS052**	90L4/90LA4	**PS052**	56C/143/145TC
58.3	1.2	2074	30.00	2567	1069	1069	**CS052**	90L4/90LA4/90L4/90LA4	**PS052**	56C/143/145TC
53.8	1.2	2251	32.55	2655	1080	1080	**CS052**	90L4/90LA4	**PS052**	56C/143/145TC
53.0	1.2	2282	33.00	2655	1082	1082	**CS052**	90L4/90LA4	**PS052**	56C/143/145TC
51.3	1.1	2357	34.09	2655	1086	1086	**CS052**	90L4/90LA4	**PS052**	56C/143/145TC
47.9	1.2	2527	36.55	2921	1095	1095	**CS052**	90L4/90LA4	**PS052**	56C/143/145TC
45.2	1.1	2679	38.75	2921	1101	1101	**CS052**	90L4/90LA4	**PS052**	56C/143/145TC
43.9	1.1	2759	39.90	3098	1103	1103	**CS052**	90L4/90LA4	**PS052**	56C/143/145TC
41.1	1.1	2947	42.63	3098	1109	1109	**CS052**	90L4/90LA4	**PS052**	56C/143/145TC
47.9	1.3	2471	36.50	3098	1102	1102	**CS053**	90L4/90LA4	**PS053**	56C/143/145TC
131.0	4.0	933	13.36	3717	1660	664	**-**	-	**PS062**	56C/143/145TC
109.8	3.6	1102	15.94	3983	1741	696	**CS062**	90L4/90LA4	**PS062**	56C/143/145TC
108.3	3.6	1118	16.16	3983	1747	699	**CS062**	90L4/90LA4	**PS062**	56C/143/145TC
90.7	3.0	1334	19.29	3983	1828	731	**CS062**	90L4/90LA4	**PS062**	56C/143/145TC
89.5	3.0	1352	19.55	4071	1835	734	**CS062**	90L4/90LA4	**PS062**	56C/143/145TC
75.5	2.6	1603	23.18	4160	1913	765	**CS062**	90L4/90LA4	**PS062**	56C/143/145TC
73.7	2.5	1642	23.75	4160	1924	770	**CS062**	90L4/90LA4	**PS062**	56C/143/145TC
69.6	2.4	1739	25.14	4248	1950	780	**CS062**	90L4/90LA4	**PS062**	56C/143/145TC
63.3	2.2	1912	27.66	4248	1993	797	**CS062**	90L4/90LA4	**PS062**	56C/143/145TC
58.3	2.1	2095	30.00	4425	2026	811	**-**	-	**PS062**	56C/143/145TC
51.6	2.0	2346	33.93	4779	2084	834	**CS062**	90L4/90LA4	**PS062**	56C/143/145TC
47.9	2.1	2529	36.57	5310	2116	847	**CS062**	90L4/90LA4	**PS062**	56C/143/145TC
44.4	2.0	2723	39.38	5310	2147	859	**CS062**	90L4/90LA4	**PS062**	56C/143/145TC
40.1	1.8	3017	43.64	5310	2189	876	**CS062**	90L4/90LA4	**PS062**	56C/143/145TC
38.0	1.7	3187	46.10	5310	2211	884	**CS062**	90L4/90LA4	**PS062**	56C/143/145TC
36.2	1.6	3340	48.30	5310	2228	891	**CS062**	90L4/90LA4	**PS062**	56C/143/145TC
32.7	1.4	3701	53.53	5310	2248	899	**CS062**	90L4/90LA4	**PS062**	56C/143/145TC
31.8	1.4	3803	55.00	5310	2248	899	**CS062**	90L4/90LA4	**PS062**	56C/143/145TC
25.9	1.1	4665	67.47	5310	2248	899	**CS062**	90L4/90LA4	**PS062**	56C/143/145TC
52.1	2.3	2273	33.57	5310	2087	835	**CS063**	90L4/90LA4	**PS063**	56C/143/145TC

2 HP

Output speed [rpm]	Service factor sf	Output torque [in-lbs]	Exact ratio i	Max. torque [in-lbs]	OHL		Gearmotor		Gear Reducer	
					Output shaft [lbs]	Hollow bore [lbs]	Reducer	Motor	Reducer	NEMA C-input
46.3	2.1	2557	37.77	5310	2139	856	**CS063**	90L4/90LA4	**PS063**	56C/143/145TC
43.7	2.0	2712	40.05	5310	2164	865	**CS063**	90L4/90LA4/90L4/90LA4	**PS063**	56C/143/145TC
35.6	1.6	3327	49.13	5310	2246	898	**CS063**	90L4/90LA4	**PS063**	56C/143/145TC
31.7	1.4	3743	55.29	5310	2248	899	**CS063**	90L4/90LA4	**PS063**	56C/143/145TC
29.8	1.3	3975	58.72	5310	2248	899	**CS063**	90L4/90LA4	**PS063**	56C/143/145TC
26.6	1.2	4458	65.85	5310	2248	899	**CS063**	90L4/90LA4	**PS063**	56C/143/145TC
25.6	1.1	4621	68.25	5310	2248	899	**CS063**	90L4/90LA4	**PS063**	56C/143/145TC
23.8	1.1	4985	73.63	5310	2248	899	**CS063**	90L4/90LA4	**PS063**	56C/143/145TC
67.2	3.9	1801	26.05	7081	4047	1211	**CS082**	90L4/90LA4	**PS082**	56C/143/145TC
61.0	4.0	2002	28.67	7966	4047	1247	**-**	-	**PS082**	56C/143/145TC
59.1	3.9	2047	29.60	7966	4047	1259	**CS082**	90L4/90LA4	**PS082**	56C/143/145TC
55.1	4.0	2219	31.78	8851	4047	1286	**-**	-	**PS082**	56C/143/145TC
50.1	3.7	2414	34.91	8851	4047	1324	**CS082**	90L4/90LA4	**PS082**	56C/143/145TC
49.3	3.6	2455	35.50	8851	4047	1331	**CS082**	90L4/90LA4	**PS082**	56C/143/145TC
43.7	3.2	2797	40.05	8851	4047	1379	**-**	-	**PS082**	56C/143/145TC
40.6	3.0	2977	43.05	8851	4047	1409	**CS082**	90L4/90LA4	**PS082**	56C/143/145TC
34.8	2.5	3475	50.25	8851	4047	1475	**CS082**	90L4/90LA4/90L4/90LA4	**PS082**	56C/143/145TC
32.2	2.4	3752	54.27	8851	4047	1508	**CS082**	90L4/90LA4	**PS082**	56C/143/145TC
28.2	2.1	4285	61.98	8851	4047	1567	**CS082**	90L4/90LA4	**PS082**	56C/143/145TC
25.9	1.9	4572	67.52	8851	4047	1608	**CS083**	90L4/90LA4	**PS083**	56C/143/145TC
23.6	1.8	5023	74.18	8851	4047	1619	**CS083**	90L4/90LA4/90L4/90LA4	**PS083**	56C/143/145TC
21.4	1.6	5532	81.71	8851	4047	1619	**CS083**	90L4/90LA4	**PS083**	56C/143/145TC
19.1	1.4	6195	91.49	8851	4047	1619	**CS083**	90L4/90LA4	**PS083**	56C/143/145TC
17.4	1.3	6813	100.62	8851	4047	1619	**CS083**	90L4/90LA4	**PS083**	56C/143/145TC
14.9	1.1	7934	117.17	8851	4047	1619	**CS083**	90L4/90LA4	**PS083**	56C/143/145TC
13.6	1.0	8716	128.73	8851	4047	1619	**CS083**	90L4/90LA4/90L4/90LA4	**PS083**	56C/143/145TC
39.8	3.8	3042	44.00	11506	4946	1757	**CS102**	90L4/90LA4	**PS102**	56C/143/145TC
34.8	3.5	3509	50.25	12391	4946	1830	**-**	-	**PS102**	56C/143/145TC
31.7	3.0	3812	55.14	11506	4946	1883	**CS102**	90L4/90LA4	**PS102**	56C/143/145TC
29.5	3.4	4107	59.40	14161	4946	1926	**CS102**	90L4/90LA4	**PS102**	56C/143/145TC
25.8	3.0	4691	67.84	14161	4946	2005	**CS102**	90L4/90LA4	**PS102**	56C/143/145TC
23.6	2.8	5073	74.18	14161	4946	2023	**-**	-	**PS103**	56C/143/145TC
21.5	2.6	5511	81.39	14161	4946	2023	**CS103**	90L4/90LA4	**PS103**	56C/143/145TC
19.5	2.3	6078	89.77	14161	4946	2023	**CS103**	90L4/90LA4	**PS103**	56C/143/145TC
17.5	2.1	6781	100.15	14161	4946	2023	**CS103**	90L4/90LA4	**PS103**	56C/143/145TC
15.8	1.9	7485	110.55	14161	4946	2023	**CS103**	90L4/90LA4	**PS103**	56C/143/145TC
14.4	1.7	8212	121.29	14161	4946	2023	**CS103**	90L4/90LA4	**PS103**	56C/143/145TC
13.6	1.6	8803	128.73	14161	4946	2023	**-**	-	**PS103**	56C/143/145TC
12.4	1.5	9563	141.24	14161	4946	2023	**CS103**	90L4/90LA4	**PS103**	56C/143/145TC
10.1	1.2	11766	173.78	14161	4946	2023	**CS103**	90L4/90LA4	**PS103**	56C/143/145TC
9.3	1.1	12763	188.51	14161	4946	2023	**CS103**	90L4/90LA4	**PS103**	56C/143/145TC

2 HP

Output speed [rpm]	Service factor sf	Output torque [in-lbs]	Exact ratio i	Max. torque [in-lbs]	OHL		Gearmotor		Gear Reducer	
					Output shaft [lbs]	Hollow bore [lbs]	Reducer	Motor	Reducer	NEMA C-input
8.6	1.0	13752	203.11	14161	4946	2023	**CS103**	90L4/90LA4	**PS103**	56C/143/145TC
16.5	3.7	7242	105.91	26552	6744	2518	**-**	-	**PS123**	143/145TC
15.6	3.5	7618	112.52	26552	6744	2518	**CS123**	90L4/90LA4	**PS123**	143/145TC
14.2	3.2	8350	123.33	26552	6744	2518	**CS123**	90L4/90LA4	**PS123**	143/145TC
13.5	3.0	8805	130.04	26552	6744	2518	**CS123**	90L4/90LA4	**PS123**	143/145TC
13.1	2.9	9058	133.78	26552	6744	2518	**CS123**	90L4/90LA4	**PS123**	143/145TC
11.6	2.6	10253	151.43	26552	6744	2518	**CS123**	90L4/90LA4	**PS123**	143/145TC
9.9	2.2	12020	177.53	26552	6744	2518	**CS123**	90L4/90LA4	**PS123**	143/145TC
9.0	2.0	13175	194.59	26552	6744	2518	**CS123**	90L4/90LA4	**PS123**	143/145TC
8.1	1.8	14598	215.60	26552	6744	2518	**CS123**	90L4/90LA4	**PS123**	143/145TC
7.3	1.6	16177	238.93	26552	6744	2518	**CS123**	90L4/90LA4	**PS123**	143/145TC
6.8	1.5	17302	255.54	26552	6744	2518	**CS123**	90L4/90LA4	**PS123**	143/145TC
6.2	1.4	18965	280.10	26552	6744	2518	**CS123**	90L4/90LA4	**PS123**	143/145TC
5.8	1.3	20390	301.16	26552	6744	2518	**CS123**	90L4/90LA4	**PS123**	143/145TC
5.1	1.1	23287	343.93	26552	6744	2518	**CS123**	90L4/90LA4	**PS123**	143/145TC

3 HP

Output speed [rpm]	Service factor sf	Output torque [in-lbs]	Exact ratio i	Max. torque [in-lbs]	OHL		Gearmotor		Gear Reducer	
					Output shaft [lbs]	Hollow bore [lbs]	Reducer	Motor	Reducer	NEMA C-input
202.9	1.7	895	8.63	1505	779	779	**CS052**	100LA4/112MR4	**PS052**	182/184TC
157.1	1.5	1156	11.14	1682	821	821	**CS052**	100LA4/112MR4	**PS052**	182/184TC
145.8	1.4	1245	12.00	1770	832	832	**CS052**	100LA4/112MR4	**PS052**	182/184TC
128.1	1.3	1416	13.66	1859	851	851	**CS052**	100LA4/112MR4	**PS052**	182/184TC
114.6	1.3	1584	15.27	2124	867	867	**CS052**	100LA4/112MR4	**PS052**	182/184TC
107.5	1.3	1689	16.29	2124	875	875	**CS052**	100LA4/112MR4	**PS052**	182/184TC
93.9	1.1	1932	18.63	2124	890	890	**CS052**	100LA4/112MR4	**PS052**	182/184TC
88.7	1.0	2046	19.73	2124	895	895	**CS052**	100LA4/112MR4	**PS052**	182/184TC
83.2	1.1	2182	21.04	2301	901	901	**CS052**	100LA4/112MR4	**PS052**	182/184TC
81.3	1.0	2233	21.53	2301	903	903	**CS052**	100LA4/112MR4	**PS052**	182/184TC
218.8	3.5	830	8.00	2921	1395	558	**CS062**	100LA4/112MR4	**PS062**	182/184TC
196.2	3.2	925	8.92	2921	1435	574	**CS062**	100LA4/112MR4	**PS062**	182/184TC
183.3	3.2	990	9.55	3186	1461	584	**CS062**	100LA4/112MR4	**PS062**	182/184TC
164.4	2.9	1104	10.65	3186	1501	601	**CS062**	100LA4/112MR4	**PS062**	182/184TC
149.5	2.8	1214	11.71	3452	1537	615	**CS062**	100LA4/112MR4	**PS062**	182/184TC
134.0	2.7	1354	13.06	3717	1578	631	**CS062**	100LA4/112MR4	**PS062**	182/184TC
131.0	2.7	1385	13.36	3717	1587	635	**CS062**	100LA4/112MR4	**PS062**	182/184TC
109.8	2.4	1653	15.94	3983	1652	661	**CS062**	100LA4/112MR4	**PS062**	182/184TC
108.3	2.4	1676	16.16	3983	1657	663	**CS062**	100LA4/112MR4	**PS062**	182/184TC
90.7	2.0	2000	19.29	3983	1721	688	**CS062**	100LA4/112MR4	**PS062**	182/184TC
89.5	2.0	2028	19.55	4071	1726	690	**CS062**	100LA4/112MR4	**PS062**	182/184TC
75.5	1.7	2404	23.18	4160	1784	714	**CS062**	100LA4/112MR4	**PS062**	182/184TC

3 HP

Output speed [rpm]	Service factor sf	Output torque [in-lbs]	Exact ratio i	Max. torque [in-lbs]	OHL		Gearmotor		Gear Reducer	
					Output shaft [lbs]	Hollow bore [lbs]	Reducer	Motor	Reducer	NEMA C-input
73.7	1.7	2463	23.75	4160	1792	717	**CS062**	100LA4/112MR4	**PS062**	182/184TC
69.6	1.6	2608	25.14	4248	1810	724	**CS062**	100LA4/112MR4	**PS062**	182/184TC
63.3	1.5	2869	27.66	4248	1839	736	**CS062**	100LA4/112MR4	**PS062**	182/184TC
58.3	1.4	3112	30.00	4425	1863	745	**CS062**	100LA4/112MR4	**PS062**	182/184TC
51.6	1.4	3519	33.93	4779	1895	758	**CS062**	100LA4/112MR4	**PS062**	182/184TC
47.9	1.4	3793	36.57	5310	1913	765	**CS062**	100LA4/112MR4	**PS062**	182/184TC
44.4	1.3	4084	39.38	5310	1928	771	**CS062**	100LA4/112MR4	**PS062**	182/184TC
40.1	1.2	4526	43.64	5310	1946	778	**CS062**	100LA4/112MR4	**PS062**	182/184TC
36.2	1.1	5010	48.30	5310	1959	784	**CS062**	100LA4/112MR4	**-**	-
101.2	3.8	1794	17.29	6815	3685	1053	**CS082**	100LA4/112MR4	**PS082**	182/184TC
92.0	3.5	1974	19.03	6815	3793	1084	**CS082**	100LA4/112MR4	**PS082**	182/184TC
86.9	3.3	2089	20.14	6815	3858	1102	**CS082**	100LA4/112MR4	**PS082**	182/184TC
79.1	3.1	2295	22.13	7081	3968	1134	**CS082**	100LA4/112MR4	**PS082**	182/184TC
72.9	2.8	2489	24.00	7081	4047	1161	**CS082**	100LA4/112MR4	**PS082**	182/184TC
67.2	2.6	2702	26.05	7081	4047	1190	**CS082**	100LA4/112MR4	**PS082**	182/184TC
64.1	2.8	2830	27.29	7966	4047	1206	**CS082**	100LA4/112MR4	**PS082**	182/184TC
61.0	2.7	2974	28.67	7966	4047	1224	**CS082**	100LA4/112MR4	**PS082**	182/184TC
59.1	2.6	3070	29.60	7966	4047	1235	**CS082**	100LA4/112MR4	**PS082**	182/184TC
55.1	2.7	3296	31.78	8851	4047	1261	**CS082**	100LA4/112MR4	**PS082**	182/184TC
50.1	2.4	3621	34.91	8851	4047	1295	**CS082**	100LA4/112MR4/100LA4/112MR4	**PS082**	182/184TC
49.3	2.4	3682	35.50	8851	4047	1301	**CS082**	100LA4/112MR4	**PS082**	182/184TC
43.7	2.1	4154	40.05	8851	4047	1346	**CS082**	100LA4/112MR4	**PS082**	182/184TC
40.6	2.0	4466	43.05	8851	4047	1374	**CS082**	100LA4/112MR4	**PS082**	182/184TC
34.8	1.7	5212	50.25	8851	4047	1434	**CS082**	100LA4/112MR4/100LA4/112MR4	**PS082**	182/184TC
32.2	1.6	5629	54.27	8851	4047	1464	**CS082**	100LA4/112MR4	**PS082**	182/184TC
28.2	1.4	6428	61.98	8851	4047	1516	**CS082**	100LA4/112MR4	**PS082**	182/184TC
25.9	1.3	6858	67.52	8851	4047	1554	**CS083**	100LA4/112MR4	**PS083**	182/184TC
23.6	1.2	7534	74.18	8851	4047	1592	**CS083**	100LA4/112MR4/100LA4/112MR4	**PS083**	182/184TC
21.4	1.1	8299	81.71	8851	4047	1619	**CS083**	100LA4/112MR4	**PS083**	182/184TC
54.0	4.0	3361	32.40	13276	4946	1577	**CS102**	100LA4/112MR4	**PS102**	182/184TC
50.1	3.4	3657	34.91	12391	4946	1612	**-**	-	**PS102**	182/184TC
45.7	3.3	3973	38.30	13276	4946	1659	**CS102**	100LA4/112MR4	**PS102**	182/184TC
41.2	2.8	4411	42.53	12391	4946	1711	**CS102**	100LA4/112MR4	**PS102**	182/184TC
39.8	2.5	4564	44.00	11506	4946	1729	**CS102**	100LA4/112MR4	**PS102**	182/184TC
37.1	2.9	4888	47.13	14161	4946	1764	**CS102**	100LA4/112MR4	**PS102**	182/184TC
34.8	2.4	5264	50.25	12391	4946	1797	**-**	-	**PS102**	182/184TC
31.7	2.0	5719	55.14	11506	4946	1847	**CS102**	100LA4/112MR4	**PS102**	182/184TC
29.5	2.3	6161	59.40	14161	4946	1887	**CS102**	100LA4/112MR4	**PS102**	182/184TC
25.8	2.0	7036	67.84	14161	4946	1961	**CS102**	100LA4/112MR4	**PS102**	182/184TC
23.6	1.9	7609	74.18	14161	4946	2013	**-**	-	**PS103**	182/184TC
21.5	1.7	8266	81.39	14161	4946	2023	**CS103**	100LA4/112MR4	**PS103**	182/184TC

5.1 S GEARED MOTORS

3 HP

Output speed [rpm]	Service factor sf	Output torque [in-lbs]	Exact ratio i	Max. torque [in-lbs]	OHL		Gearmotor		Gear Reducer	
					Output shaft [lbs]	Hollow bore [lbs]	Reducer	Motor	Reducer	NEMA C-input
19.5	1.6	9117	89.77	14161	4946	2023	**CS103**	100LA4/112MR4	**PS103**	182/184TC
17.5	1.4	10171	100.15	14161	4946	2023	**CS103**	100LA4/112MR4	**PS103**	182/184TC
15.8	1.3	11227	110.55	14161	4946	2023	**CS103**	100LA4/112MR4	**PS103**	182/184TC
14.4	1.1	12319	121.29	14161	4946	2023	**CS103**	100LA4/112MR4	**PS103**	182/184TC
13.6	1.1	13074	128.73	14161	4946	2023	**CS103**	100LA4/112MR4	**PS103**	182/184TC
26.5	3.9	6846	66.00	26552	6744	2518	**CS122**	100LA4/112MR4	**PS122**	182/184TC
27.0	3.6	6585	64.84	23897	6744	2518	**CS123**	100LA4/112MR4	**PS123**	182/184TC
24.6	3.3	7218	71.07	23897	6744	2518	**CS123**	100LA4/112MR4	**PS123**	182/184TC
22.3	3.3	7969	78.46	26552	6744	2518	**CS123**	100LA4/112MR4	**PS123**	182/184TC
20.1	3.0	8863	87.27	26552	6744	2518	**CS123**	100LA4/112MR4	**PS123**	182/184TC
16.5	2.5	10756	105.91	26552	6744	2518	**CS123**	100LA4/112MR4	**PS123**	182/184TC
15.6	2.3	11427	112.52	26552	6744	2518	**CS123**	100LA4/112MR4	**PS123**	182/184TC
14.2	2.1	12525	123.33	26552	6744	2518	**CS123**	100LA4/112MR4	**PS123**	182/184TC
13.5	2.0	13207	130.04	26552	6744	2518	**CS123**	100LA4/112MR4	**PS123**	182/184TC
13.1	2.0	13587	133.78	26552	6744	2518	**CS123**	100LA4/112MR4	**PS123**	182/184TC
11.6	1.7	15380	151.43	26552	6744	2518	**CS123**	100LA4/112MR4	**PS123**	182/184TC
9.9	1.5	18030	177.53	26552	6744	2518	**CS123**	100LA4/112MR4	**PS123**	182/184TC
9.0	1.3	19762	194.59	26552	6744	2518	**CS123**	100LA4/112MR4	**PS123**	182/184TC
8.1	1.2	21896	215.60	26552	6744	2518	**CS123**	100LA4/112MR4	**PS123**	182/184TC
7.3	1.1	24266	238.93	26552	6744	2518	**CS123**	100LA4/112MR4	**PS123**	182/184TC
6.8	1.0	25953	255.54	26552	6744	2518	**CS123**	100LA4/112MR4	**PS123**	182/184TC
17.7	3.9	10035	98.81	39297	7868	4159	**S143**	100LA4/112MR4	**S143**	182/184TC
15.9	3.7	11177	110.05	41895	7868	4159	**S143**	100LA4/112MR4	**S143**	182/184TC
14.2	3.4	12537	123.44	42080	7868	4159	**S143**	100LA4/112MR4	**S143**	182/184TC
12.5	3.0	14182	139.64	42845	7868	4159	**S143**	100LA4/112MR4	**S143**	182/184TC
11.7	2.8	15142	149.10	42356	7868	4159	**S143**	100LA4/112MR4	**S143**	182/184TC
11.1	2.1	15994	157.49	33645	7868	4159	**S143**	100LA4/112MR4	**S143**	182/184TC
10.2	2.4	17422	171.55	41327	7868	4159	**S143**	100LA4/112MR4	**S143**	182/184TC
10.0	2.1	17814	175.41	37473	7868	4159	**S143**	100LA4/112MR4	**S143**	182/184TC
8.9	2.1	19981	196.74	42030	7868	4159	**S143**	100LA4/112MR4	**S143**	182/184TC
7.9	1.8	22604	222.57	41731	7868	4159	**S143**	100LA4/112MR4	**S143**	182/184TC
7.4	1.8	24134	237.63	43205	7868	4159	**S143**	100LA4/112MR4	**S143**	182/184TC
6.4	1.5	27768	273.41	42411	7868	4159	**S143**	100LA4/112MR4	**S143**	182/184TC

5 HP

Output speed [rpm]	Service factor sf	Output torque [in-lbs]	Exact ratio i	Max. torque [in-lbs]	OHL		Gearmotor		Gear Reducer	
					Output shaft [lbs]	Hollow bore [lbs]	Reducer	Motor	Reducer	NEMA C-input
202.9	1.0	1491	8.63	1505	691	691	**CS052**	112M4/112MA4	**-**	-
218.8	2.1	1383	8.00	2921	1306	522	**CS062**	112M4/112MA4	**PS062**	182/184TC
196.2	1.9	1542	8.92	2921	1336	534	**CS062**	112M4/112MA4	**PS062**	182/184TC
183.3	1.9	1650	9.55	3186	1354	542	**CS062**	112M4/112MA4	**PS062**	182/184TC

5 HP

Output speed [rpm]	Service factor sf	Output torque [in-lbs]	Exact ratio i	Max. torque [in-lbs]	OHL		Gearmotor		Gear Reducer	
					Output shaft [lbs]	Hollow bore [lbs]	Reducer	Motor	Reducer	NEMA C-input
164.4	1.7	1840	10.65	3186	1383	553	**CS062**	112M4/112MA4	**PS062**	182/184TC
149.5	1.7	2024	11.71	3452	1407	563	**CS062**	112M4/112MA4	**PS062**	182/184TC
134.0	1.6	2257	13.06	3717	1433	573	**CS062**	112M4/112MA4	**PS062**	182/184TC
131.0	1.6	2309	13.36	3717	1438	575	**CS062**	112M4/112MA4	**PS062**	182/184TC
109.8	1.4	2755	15.94	3983	1475	590	**CS062**	112M4/112MA4	**PS062**	182/184TC
108.3	1.4	2794	16.16	3983	1478	591	**CS062**	112M4/112MA4	**PS062**	182/184TC
90.7	1.2	3334	19.29	3983	1506	603	**CS062**	112M4/112MA4	**PS062**	182/184TC
89.5	1.2	3380	19.55	4071	1508	603	**CS062**	112M4/112MA4	**PS062**	182/184TC
75.5	1.0	4007	23.18	4160	1526	610	**CS062**	112M4/112MA4	**PS062**	182/184TC
73.7	1.0	4106	23.75	4160	1527	611	**CS062**	112M4/112MA4	**PS062**	182/184TC
238.5	3.8	1269	7.34	4868	2784	795	**CS082**	112M4/112MA4	**PS082**	182/184TC
217.1	3.8	1394	8.06	5310	2865	818	**CS082**	112M4/112MA4	**PS082**	182/184TC
176.0	3.3	1719	9.94	5753	3051	872	**CS082**	112M4/112MA4	**PS082**	182/184TC
150.8	3.1	2006	11.61	6196	3194	913	**CS082**	112M4/112MA4	**PS082**	182/184TC
137.3	3.0	2204	12.75	6638	3284	938	**CS082**	112M4/112MA4	**PS082**	182/184TC
124.6	2.8	2428	14.04	6727	3378	965	**CS082**	112M4/112MA4	**PS082**	182/184TC
113.4	2.6	2667	15.43	6815	3470	992	**CS082**	112M4/112MA4	**PS082**	182/184TC
111.3	2.5	2718	15.73	6815	3489	997	**CS082**	112M4/112MA4	**PS082**	182/184TC
101.2	2.3	2990	17.29	6815	3585	1024	**CS082**	112M4/112MA4	**PS082**	182/184TC
92.0	2.1	3289	19.03	6815	3683	1052	**CS082**	112M4/112MA4	**PS082**	182/184TC
86.9	2.0	3481	20.14	6815	3742	1069	**CS082**	112M4/112MA4	**PS082**	182/184TC
79.1	1.9	3825	22.13	7081	3840	1097	**CS082**	112M4/112MA4/112M4/112MA4	**PS082**	182/184TC
72.9	1.7	4149	24.00	7081	3926	1122	**CS082**	112M4/112MA4	**PS082**	182/184TC
67.2	1.6	4503	26.05	7081	4014	1147	**CS082**	112M4/112MA4	**PS082**	182/184TC
64.1	1.7	4717	27.29	7966	4047	1161	**CS082**	112M4/112MA4	**PS082**	182/184TC
61.0	1.6	4957	28.67	7966	4047	1176	**CS082**	112M4/112MA4	**PS082**	182/184TC
59.1	1.6	5117	29.60	7966	4047	1186	**CS082**	112M4/112MA4	**PS082**	182/184TC
55.1	1.6	5493	31.78	8851	4047	1208	**CS082**	112M4/112MA4	**PS082**	182/184TC
50.1	1.5	6035	34.91	8851	4047	1238	**CS082**	112M4/112MA4/112M4/112MA4	**PS082**	182/184TC
49.3	1.4	6137	35.50	8851	4047	1243	**CS082**	112M4/112MA4	**PS082**	182/184TC
43.7	1.3	6924	40.05	8851	4047	1280	**CS082**	112M4/112MA4	**PS082**	182/184TC
40.6	1.2	7443	43.05	8851	4047	1303	**CS082**	112M4/112MA4	**PS082**	182/184TC
34.8	1.0	8687	50.25	8851	4047	1351	**CS082**	112M4/112MA4/112M4/112MA4	**PS082**	182/184TC
101.7	3.9	2976	17.21	11506	4463	1275	**CS102**	112M4/112MA4	**-**	-
92.1	3.8	3285	19.00	12391	4597	1313	**CS102**	112M4/112MA4	**PS102**	182/184TC
84.0	3.4	3601	20.83	12391	4724	1350	**CS102**	112M4/112MA4	**PS102**	182/184TC
79.1	3.2	3863	22.13	12391	4807	1373	**-**	-	**PS102**	182/184TC
72.1	3.2	4197	24.28	13276	4942	1412	**CS102**	112M4/112MA4	**PS102**	182/184TC
66.5	2.9	4552	26.33	13276	4946	1446	**CS102**	112M4/112MA4	**PS102**	182/184TC
58.6	2.6	5163	29.87	13276	4946	1500	**CS102**	112M4/112MA4	**PS102**	182/184TC
54.0	2.4	5601	32.40	13276	4946	1535	**CS102**	112M4/112MA4	**PS102**	182/184TC

5 HP

Output speed [rpm]	Service factor sf	Output torque [in-lbs]	Exact ratio i	Max. torque [in-lbs]	OHL		Gearmotor		Gear Reducer	
					Output shaft [lbs]	Hollow bore [lbs]	Reducer	Motor	Reducer	NEMA C-input
50.1	2.0	6095	34.91	12391	4946	1566	**-**	-	**PS102**	182/184TC
45.7	2.0	6621	38.30	13276	4946	1609	**CS102**	112M4/112MA4	**PS102**	182/184TC
41.2	1.7	7351	42.53	12391	4946	1656	**CS102**	112M4/112MA4	**PS102**	182/184TC
39.8	1.5	7606	44.00	11506	4946	1671	**CS102**	112M4/112MA4	**PS102**	182/184TC
37.1	1.7	8147	47.13	14161	4946	1703	**CS102**	112M4/112MA4	**PS102**	182/184TC
34.8	1.4	8774	50.25	12391	4946	1731	**-**	-	**PS102**	182/184TC
31.7	1.2	9531	55.14	11506	4946	1775	**CS102**	112M4/112MA4	**PS102**	182/184TC
29.5	1.4	10268	59.40	14161	4946	1810	**CS102**	112M4/112MA4	**PS102**	182/184TC
25.8	1.2	11727	67.84	14161	4946	1872	**CS102**	112M4/112MA4	**PS102**	182/184TC
23.6	1.1	12557	74.18	14161	4946	1919	**CS103**	112M4/112MA4	**PS103**	182/184TC
21.5	1.0	13777	81.39	14161	4946	1963	**CS103**	112M4/112MA4	**PS103**	182/184TC
42.6	3.7	7099	41.07	26552	6744	2342	**CS122**	112M4/112MA4	**PS122**	182/184TC
40.1	3.5	7537	43.60	26552	6744	2381	**CS122**	112M4/112MA4	**PS122**	182/184TC
39.2	2.8	7715	44.63	21242	6744	2396	**CS122**	112M4/112MA4	**PS122**	182/184TC
35.7	2.5	8477	49.04	21242	6744	2457	**CS122**	112M4/112MA4	**PS122**	182/184TC
32.6	2.5	9292	53.75	23012	6744	2518	**CS122**	112M4/112MA4	**PS122**	182/184TC
26.5	2.3	11409	66.00	26552	6744	2518	**CS122**	112M4/112MA4	**PS122**	182/184TC
27.0	2.2	10975	64.84	23897	6744	2518	**CS123**	112M4/112MA4	**PS123**	182/184TC
24.6	2.0	12030	71.07	23897	6744	2518	**CS123**	112M4/112MA4	**PS123**	182/184TC
22.3	2.0	13281	78.46	26552	6744	2518	**CS123**	112M4/112MA4	**PS123**	182/184TC
20.1	1.8	14771	87.27	26552	6744	2518	**CS123**	112M4/112MA4	**PS123**	182/184TC
16.5	1.5	17927	105.91	26552	6744	2518	**CS123**	112M4/112MA4	**PS123**	182/184TC
15.6	1.4	19045	112.52	26552	6744	2518	**CS123**	112M4/112MA4	**PS123**	182/184TC
14.2	1.3	20875	123.33	26552	6744	2518	**CS123**	112M4/112MA4	**PS123**	182/184TC
13.5	1.2	22012	130.04	26552	6744	2518	**CS123**	112M4/112MA4	**PS123**	182/184TC
13.1	1.2	22644	133.78	26552	6744	2518	**CS123**	112M4/112MA4	**PS123**	182/184TC
11.6	1.0	25633	151.43	26552	6744	2518	**CS123**	112M4/112MA4	**PS123**	182/184TC
27.1	3.9	10948	64.68	42257	7868	4159	**S143**	112M4/112MA4	**S143**	182/184TC
25.3	3.7	11689	69.06	43158	7868	4159	**S143**	112M4/112MA4	**S143**	182/184TC
22.0	2.8	13449	79.45	37469	7868	4159	**S143**	112M4/112MA4	**S143**	182/184TC
17.7	2.3	16725	98.81	39297	7868	4159	**S143**	112M4/112MA4	**S143**	182/184TC
15.9	2.2	18629	110.05	41895	7868	4159	**S143**	112M4/112MA4	**S143**	182/184TC
14.2	2.0	20894	123.44	42080	7868	4159	**S143**	112M4/112MA4	**S143**	182/184TC
12.5	1.8	23637	139.64	42845	7868	4159	**S143**	112M4/112MA4	**S143**	182/184TC
11.7	1.7	25237	149.10	42356	7868	4159	**S143**	112M4/112MA4	**S143**	182/184TC
11.1	1.3	26657	157.49	33645	7868	4159	**S143**	112M4/112MA4	**S143**	182/184TC
10.2	1.4	29037	171.55	41327	7868	4159	**S143**	112M4/112MA4	**S143**	182/184TC
10.0	1.3	29691	175.41	37473	7868	4159	**S143**	112M4/112MA4	**S143**	182/184TC
8.9	1.3	33302	196.74	42030	7868	4159	**S143**	112M4/112MA4	**S143**	182/184TC
7.9	1.1	37673	222.57	41731	7868	4159	**S143**	112M4/112MA4	**S143**	182/184TC
7.4	1.1	40223	237.63	43205	7868	4159	**S143**	112M4/112MA4	**S143**	182/184TC

7.5 HP

Output speed [rpm]	Service factor sf	Output torque [in-lbs]	Exact ratio i	Max. torque [in-lbs]	OHL		Gearmotor		Gear Reducer	
					Output shaft [lbs]	Hollow bore [lbs]	Reducer	Motor	Reducer	NEMA C-input
238.5	2.6	1903	7.34	4868	2731	780	**CS082**	132MS4/132S4	**PS082**	213/215TC
217.1	2.5	2091	8.06	5310	2807	802	**CS082**	132MS4/132S4/132MS4/132S4	**PS082**	213/215TC
176.0	2.2	2578	9.94	5753	2979	851	**CS082**	132MS4/132S4	**PS082**	213/215TC
150.8	2.1	3009	11.61	6196	3111	889	**CS082**	132MS4/132S4	**PS082**	213/215TC
137.3	2.0	3306	12.75	6638	3192	912	**CS082**	132MS4/132S4/132MS4/132S4	**PS082**	213/215TC
124.6	1.8	3642	14.04	6727	3276	936	**CS082**	132MS4/132S4	**PS082**	213/215TC
113.4	1.7	4001	15.43	6815	3359	960	**CS082**	132MS4/132S4/132MS4/132S4	**PS082**	213/215TC
111.3	1.7	4078	15.73	6815	3376	965	**CS082**	132MS4/132S4	**PS082**	213/215TC
101.2	1.5	4485	17.29	6815	3461	989	**CS082**	132MS4/132S4	**PS082**	213/215TC
92.0	1.4	4934	19.03	6815	3546	1013	**CS082**	132MS4/132S4	**PS082**	213/215TC
86.9	1.3	5222	20.14	6815	3597	1028	**CS082**	132MS4/132S4	**PS082**	213/215TC
79.1	1.2	5737	22.13	7081	3681	1052	**CS082**	132MS4/132S4/132MS4/132S4	**PS082**	213/215TC
72.9	1.1	6223	24.00	7081	3753	1072	**CS082**	132MS4/132S4	**PS082**	213/215TC
67.2	1.0	6754	26.05	7081	3826	1093	**CS082**	132MS4/132S4	**PS082**	213/215TC
64.1	1.1	7076	27.29	7966	3867	1105	**CS082**	132MS4/132S4	**PS082**	213/215TC
61.0	1.1	7435	28.67	7966	3911	1117	**CS082**	132MS4/132S4	**PS082**	213/215TC
59.1	1.0	7675	29.60	7966	3938	1125	**CS082**	132MS4/132S4	**PS082**	213/215TC
55.1	1.1	8240	31.78	8851	4000	1143	**CS082**	132MS4/132S4	**PS082**	213/215TC
217.1	3.6	2112	8.06	7523	3488	997	**-**	-	**PS102**	213/215TC
197.8	3.5	2294	8.85	7966	3589	1025	**CS102**	132MS4/132S4	**PS102**	213/215TC
160.8	3.0	2822	10.88	8408	3819	1091	**CS102**	132MS4/132S4	**PS102**	213/215TC
137.3	2.7	3339	12.75	8851	4000	1143	**-**	-	**PS102**	213/215TC
125.1	2.9	3628	13.99	10621	4112	1175	**CS102**	132MS4/132S4	**PS102**	213/215TC
113.4	2.7	4041	15.43	11063	4228	1208	**-**	-	**PS102**	213/215TC
101.7	2.6	4463	17.21	11506	4365	1247	**CS102**	132MS4/132S4	**PS102**	213/215TC
92.1	2.5	4927	19.00	12391	4489	1283	**CS102**	132MS4/132S4	**PS102**	213/215TC
84.0	2.3	5401	20.83	12391	4606	1316	**CS102**	132MS4/132S4	**PS102**	213/215TC
79.1	2.1	5794	22.13	12391	4680	1337	**-**	-	**PS102**	213/215TC
72.1	2.1	6295	24.28	13276	4804	1373	**CS102**	132MS4/132S4	**PS102**	213/215TC
66.5	1.9	6828	26.33	13276	4911	1403	**CS102**	132MS4/132S4	**PS102**	213/215TC
58.6	1.7	7745	29.87	13276	4946	1451	**CS102**	132MS4/132S4	**PS102**	213/215TC
54.0	1.6	8401	32.40	13276	4946	1482	**CS102**	132MS4/132S4	**PS102**	213/215TC
50.1	1.4	9052	34.91	12391	4946	1511	**CS102**	132MS4/132S4	**PS102**	213/215TC
45.7	1.3	9932	38.30	13276	4946	1546	**CS102**	132MS4/132S4	**PS102**	213/215TC
41.2	1.1	11027	42.53	12391	4946	1587	**CS102**	132MS4/132S4	**PS102**	213/215TC
37.1	1.2	12220	47.13	14161	4946	1626	**CS102**	132MS4/132S4	**PS102**	213/215TC
66.9	3.9	6782	26.15	26552	6744	2000	**CS122**	132MS4/132S4	**PS122**	213/215TC
61.2	3.6	7416	28.60	26552	6744	2048	**CS122**	132MS4/132S4	**PS122**	213/215TC
57.4	3.4	7912	30.51	26552	6744	2083	**CS122**	132MS4/132S4	**PS122**	213/215TC
53.4	3.1	8494	32.76	26552	6744	2122	**CS122**	132MS4/132S4	**PS122**	213/215TC
52.3	3.1	8672	33.44	26552	6744	2133	**CS122**	132MS4/132S4	**PS122**	213/215TC

7.5 HP

Output speed [rpm]	Service factor sf	Output torque [in-lbs]	Exact ratio i	Max. torque [in-lbs]	OHL		Gearmotor		Gear Reducer	
					Output shaft [lbs]	Hollow bore [lbs]	Reducer	Motor	Reducer	NEMA C-input
49.7	2.9	9127	35.20	26552	6744	2161	**CS122**	132MS4/132S4	**PS122**	213/215TC
42.6	2.5	10649	41.07	26552	6744	2245	**CS122**	132MS4/132S4	**PS122**	213/215TC
40.1	2.3	11305	43.60	26552	6744	2277	**CS122**	132MS4/132S4	**PS122**	213/215TC
39.2	1.8	11572	44.63	21242	6744	2290	**CS122**	132MS4/132S4	**PS122**	213/215TC
35.7	1.7	12716	49.04	21242	6744	2341	**CS122**	132MS4/132S4	**PS122**	213/215TC
32.6	1.7	13938	53.75	23012	6744	2390	**CS122**	132MS4/132S4	**PS122**	213/215TC
26.5	1.6	17114	66.00	26552	6744	2497	**CS122**	132MS4/132S4	**PS122**	213/215TC
27.0	1.5	16463	64.84	23897	6744	2498	**CS123**	132MS4/132S4	**PS123**	213/215TC
24.6	1.3	18045	71.07	23897	6744	2518	**CS123**	132MS4/132S4	**PS123**	213/215TC
22.3	1.3	19921	78.46	26552	6744	2518	**CS123**	132MS4/132S4	**PS123**	213/215TC
20.1	1.2	22157	87.27	26552	6744	2518	**CS123**	132MS4/132S4	**PS123**	213/215TC
78.7	3.7	5768	22.24	21418	7868	4159	**S142**	132MS4/132S4	**-**	-
69.3	2.9	6550	25.26	18710	7868	4159	**S142**	132MS4/132S4	**S142**	213/215TC
61.8	2.9	7347	28.33	20984	7868	4159	**S142**	132MS4/132S4	**S142**	213/215TC
54.6	2.9	8311	32.05	23739	7868	4159	**S142**	132MS4/132S4	**S142**	213/215TC
51.1	2.9	8874	34.22	25346	7868	4159	**S142**	132MS4/132S4	**S142**	213/215TC
44.4	3.8	10210	39.38	39216	7868	4159	**S142**	132MS4/132S4	**S142**	213/215TC
38.2	3.1	11620	45.77	35517	7868	4159	**S143**	132MS4/132S4	**S143**	213/215TC
34.3	3.1	12942	50.97	39561	7868	4159	**S143**	132MS4/132S4	**S143**	213/215TC
30.6	2.9	14516	57.17	41904	7868	4159	**S143**	132MS4/132S4	**S143**	213/215TC
27.1	2.6	16422	64.68	42257	7868	4159	**S143**	132MS4/132S4	**S143**	213/215TC
25.3	2.5	17533	69.06	43158	7868	4159	**S143**	132MS4/132S4	**S143**	213/215TC
22.0	1.9	20173	79.45	37469	7868	4159	**S143**	132MS4/132S4	**S143**	213/215TC
17.7	1.6	25088	98.81	39297	7868	4159	**S143**	132MS4/132S4	**S143**	213/215TC
15.9	1.5	27943	110.05	41895	7868	4159	**S143**	132MS4/132S4	**S143**	213/215TC
14.2	1.3	31342	123.44	42080	7868	4159	**S143**	132MS4/132S4	**S143**	213/215TC
12.5	1.2	35456	139.64	42845	7868	4159	**S143**	132MS4/132S4	**S143**	213/215TC
11.7	1.1	37856	149.10	42356	7868	4159	**S143**	132MS4/132S4	**S143**	213/215TC
23.8	3.7	18694	73.63	68854	8992	4361	**S153**	132MS4/132S4	**S153**	213/215TC
20.1	2.8	22129	87.16	62889	8992	4361	**S153**	132MS4/132S4	**S153**	213/215TC
18.0	2.8	24698	97.27	70191	8992	4361	**S153**	132MS4/132S4	**S153**	213/215TC
15.7	2.8	28353	111.67	80575	8992	4361	**S153**	132MS4/132S4	**S153**	213/215TC
14.3	2.7	31120	122.57	84402	8992	4361	**S153**	132MS4/132S4	**S153**	213/215TC
12.6	2.3	35346	139.21	80913	8992	4361	**S153**	132MS4/132S4	**S153**	213/215TC
11.4	1.6	39105	154.02	63094	8992	4361	**S153**	132MS4/132S4	**S153**	213/215TC
10.9	1.8	40628	160.02	71552	8992	4361	**S153**	132MS4/132S4	**S153**	213/215TC
9.9	1.6	44893	176.81	72434	8992	4361	**S153**	132MS4/132S4	**S153**	213/215TC
9.0	1.6	49273	194.06	79497	8992	4361	**S153**	132MS4/132S4	**S153**	213/215TC
7.9	1.5	55964	220.42	82782	8992	4361	**S153**	132MS4/132S4	**S153**	213/215TC
6.9	1.1	64328	253.36	73272	8992	4361	**S153**	132MS4/132S4	**-**	-
6.9	1.1	64971	253.36	73272	8992	4361	**-**	-	**S153**	213/215TC

10 HP

Output speed [rpm]	Service factor sf	Output torque [in-lbs]	Exact ratio i	Max. torque [in-lbs]	OHL		Gearmotor		Gear Reducer	
					Output shaft [lbs]	Hollow bore [lbs]	Reducer	Motor	Reducer	NEMA C-input
238.5	1.9	2537	7.34	4868	2678	765	**CS082**	132MA4/132M4	**PS082**	213/215TC
217.1	1.9	2788	8.06	5310	2748	785	**CS082**	132MA4/132M4/132MA4/132M4	**PS082**	213/215TC
176.0	1.7	3438	9.94	5753	2908	831	**CS082**	132MA4/132M4	**PS082**	213/215TC
150.8	1.5	4013	11.61	6196	3027	865	**CS082**	132MA4/132M4	**PS082**	213/215TC
137.3	1.5	4408	12.75	6638	3100	886	**CS082**	132MA4/132M4/132MA4/132M4	**PS082**	213/215TC
124.6	1.4	4856	14.04	6727	3175	907	**CS082**	132MA4/132M4	**PS082**	213/215TC
113.4	1.3	5334	15.43	6815	3248	928	**CS082**	132MA4/132M4/132MA4/132M4	**PS082**	213/215TC
111.3	1.3	5437	15.73	6815	3263	932	**CS082**	132MA4/132M4	**PS082**	213/215TC
101.2	1.1	5979	17.29	6815	3336	953	**CS082**	132MA4/132M4	**PS082**	213/215TC
92.0	1.0	6579	19.03	6815	3409	974	**CS082**	132MA4/132M4	**PS082**	213/215TC
217.1	2.7	2815	8.06	7523	3442	983	**-**	-	**PS102**	213/215TC
197.8	2.6	3059	8.85	7966	3539	1011	**CS102**	132MA4/132M4	**PS102**	213/215TC
160.8	2.2	3763	10.88	8408	3757	1073	**CS102**	132MA4/132M4	**PS102**	213/215TC
137.3	2.0	4452	12.75	8851	3926	1122	**-**	-	**PS102**	213/215TC
125.1	2.2	4837	13.99	10621	4032	1152	**CS102**	132MA4/132M4	**PS102**	213/215TC
113.4	2.1	5388	15.43	11063	4139	1183	**-**	-	**PS102**	213/215TC
101.7	1.9	5951	17.21	11506	4267	1219	**CS102**	132MA4/132M4	**PS102**	213/215TC
92.1	1.9	6569	19.00	12391	4381	1252	**CS102**	132MA4/132M4	**PS102**	213/215TC
84.0	1.7	7201	20.83	12391	4487	1282	**CS102**	132MA4/132M4	**PS102**	213/215TC
79.1	1.6	7649	22.13	12391	4557	1302	**CS102**	132MA4/132M4	**PS102**	213/215TC
72.1	1.6	8393	24.28	13276	4666	1333	**CS102**	132MA4/132M4	**PS102**	213/215TC
66.5	1.5	9104	26.33	13276	4761	1360	**CS102**	132MA4/132M4	**PS102**	213/215TC
58.6	1.3	10327	29.87	13276	4908	1402	**CS102**	132MA4/132M4	**PS102**	213/215TC
54.0	1.2	11202	32.40	13276	4946	1429	**CS102**	132MA4/132M4	**PS102**	213/215TC
50.1	1.0	12069	34.91	12391	4946	1454	**CS102**	132MA4/132M4	**PS102**	213/215TC
45.7	1.0	13243	38.30	13276	4946	1484	**CS102**	132MA4/132M4	**-**	-
103.0	3.9	5934	16.99	23012	6067	1733	**-**	-	**PS122**	213/215TC
82.4	3.4	7347	21.25	24782	6439	1840	**CS122**	132MA4/132M4	**PS122**	213/215TC
78.2	3.2	7733	22.37	24782	6523	1864	**CS122**	132MA4/132M4	**PS122**	213/215TC
75.1	3.2	8053	23.29	25667	6590	1883	**CS122**	132MA4/132M4	**PS122**	213/215TC
66.9	2.9	9042	26.15	26552	6744	1938	**CS122**	132MA4/132M4	**PS122**	213/215TC
61.2	2.7	9888	28.60	26552	6744	1980	**CS122**	132MA4/132M4	**PS122**	213/215TC
57.4	2.5	10549	30.51	26552	6744	2011	**CS122**	132MA4/132M4	**PS122**	213/215TC
53.4	2.3	11325	32.76	26552	6744	2044	**CS122**	132MA4/132M4	**PS122**	213/215TC
52.3	2.3	11563	33.44	26552	6744	2053	**CS122**	132MA4/132M4	**PS122**	213/215TC
49.7	2.2	12170	35.20	26552	6744	2077	**CS122**	132MA4/132M4	**PS122**	213/215TC
42.6	1.9	14198	41.07	26552	6744	2147	**CS122**	132MA4/132M4	**PS122**	213/215TC
40.1	1.8	15073	43.60	26552	6744	2174	**CS122**	132MA4/132M4	**PS122**	213/215TC
39.2	1.4	15430	44.63	21242	6744	2184	**CS122**	132MA4/132M4	**PS122**	213/215TC
35.7	1.3	16954	49.04	21242	6744	2224	**CS122**	132MA4/132M4	**PS122**	213/215TC
32.6	1.2	18583	53.75	23012	6744	2262	**CS122**	132MA4/132M4	**PS122**	213/215TC

5.1 S GEARED MOTORS

10 HP

Output speed [rpm]	Service factor sf	Output torque [in-lbs]	Exact ratio i	Max. torque [in-lbs]	OHL		Gearmotor		Gear Reducer	
					Output shaft [lbs]	Hollow bore [lbs]	Reducer	Motor	Reducer	NEMA C-input
26.5	1.2	22819	66.00	26552	6744	2340	**CS122**	132MA4/132M4	**PS122**	213/215TC
27.0	1.1	21950	64.84	23897	6744	2347	**CS123**	132MA4/132M4	**PS123**	213/215TC
136.6	3.8	4430	12.81	16928	7868	4159	**S142**	132MA4/132M4	**-**	-
122.6	3.2	4934	14.27	15765	7868	4159	**S142**	132MA4/132M4	**-**	-
109.3	3.1	5534	16.01	17133	7868	4159	**S142**	132MA4/132M4	**-**	-
96.6	3.1	6260	18.11	19382	7868	4159	**S142**	132MA4/132M4	**-**	-
90.5	3.1	6684	19.33	20699	7868	4159	**S142**	132MA4/132M4	**-**	-
78.7	2.8	7691	22.24	21418	7868	4159	**S142**	132MA4/132M4	**S142**	213/215TC
69.3	2.1	8734	25.26	18710	7868	4159	**S142**	132MA4/132M4	**S142**	213/215TC
61.8	2.1	9796	28.33	20984	7868	4159	**S142**	132MA4/132M4	**S142**	213/215TC
54.6	2.1	11082	32.05	23739	7868	4159	**S142**	132MA4/132M4	**S142**	213/215TC
51.1	2.1	11832	34.22	25346	7868	4159	**S142**	132MA4/132M4	**S142**	213/215TC
44.4	2.9	13613	39.38	39216	7868	4159	**S142**	132MA4/132M4	**S142**	213/215TC
38.2	2.3	15493	45.77	35517	7868	4159	**S143**	132MA4/132M4	**S143**	213/215TC
34.3	2.3	17256	50.97	39561	7868	4159	**S143**	132MA4/132M4	**S143**	213/215TC
30.6	2.2	19355	57.17	41904	7868	4159	**S143**	132MA4/132M4	**S143**	213/215TC
27.1	1.9	21896	64.68	42257	7868	4159	**S143**	132MA4/132M4	**S143**	213/215TC
25.3	1.8	23378	69.06	43158	7868	4159	**S143**	132MA4/132M4	**S143**	213/215TC
22.0	1.4	26898	79.45	37469	7868	4159	**S143**	132MA4/132M4	**S143**	213/215TC
17.7	1.2	33451	98.81	39297	7868	4159	**S143**	132MA4/132M4	**S143**	213/215TC
15.9	1.1	37257	110.05	41895	7868	4159	**S143**	132MA4/132M4	**S143**	213/215TC
14.2	1.0	41789	123.44	42080	7868	4159	**S143**	132MA4/132M4	**-**	-
34.1	4.0	17568	51.38	69614	8992	4361	**-**	-	**S153**	213/215TC
31.0	3.8	19091	56.39	73053	8992	4361	**S153**	132MA4/132M4	**S153**	213/215TC
27.3	3.6	21684	64.05	77845	8992	4361	**S153**	132MA4/132M4	**S153**	213/215TC
23.8	2.8	24925	73.63	68854	8992	4361	**S153**	132MA4/132M4	**S153**	213/215TC
20.1	2.1	29506	87.16	62889	8992	4361	**S153**	132MA4/132M4	**S153**	213/215TC
18.0	2.1	32931	97.27	70191	8992	4361	**S153**	132MA4/132M4	**S153**	213/215TC
15.7	2.1	37804	111.67	80575	8992	4361	**S153**	132MA4/132M4	**S153**	213/215TC
14.3	2.0	41493	122.57	84402	8992	4361	**S153**	132MA4/132M4	**S153**	213/215TC
12.6	1.7	47128	139.21	80913	8992	4361	**S153**	132MA4/132M4	**S153**	213/215TC
11.4	1.2	52140	154.02	63094	8992	4361	**S153**	132MA4/132M4	**S153**	213/215TC
10.9	1.3	54171	160.02	71552	8992	4361	**S153**	132MA4/132M4	**S153**	213/215TC
9.9	1.2	59857	176.81	72434	8992	4361	**S153**	132MA4/132M4	**S153**	213/215TC
9.0	1.2	65697	194.06	79497	8992	4361	**S153**	132MA4/132M4	**S153**	213/215TC
7.9	1.1	74619	220.42	82782	8992	4361	**S153**	132MA4/132M4	**S153**	213/215TC

15 HP

Output speed [rpm]	Service factor sf	Output torque [in-lbs]	Exact ratio i	Max. torque [in-lbs]	OHL		Gearmotor		Gear Reducer	
					Output shaft [lbs]	Hollow bore [lbs]	Reducer	Motor	Reducer	NEMA C-input
238.5	1.3	3806	7.34	4868	2572	735	**CS082**	132MC4	**-**	-

15 HP

Output speed [rpm]	Service factor sf	Output torque [in-lbs]	Exact ratio i	Max. torque [in-lbs]	OHL		Gearmotor		Gear Reducer	
					Output shaft [lbs]	Hollow bore [lbs]	Reducer	Motor	Reducer	NEMA C-input
217.1	1.3	4181	8.06	5310	2632	752	**CS082**	132MC4/132MC4	**PS102**	254/256TC
176.0	1.1	5157	9.94	5753	2764	790	**CS082**	132MC4	**-**	-
150.8	1.0	6019	11.61	6196	2860	817	**CS082**	132MC4	**-**	-
137.3	1.0	6612	12.75	6638	2916	833	**CS082**	132MC4/132MC4	**PS102**	254/256TC
197.8	1.7	4588	8.85	7966	3438	982	**CS102**	132MC4	**PS102**	254/256TC
160.8	1.5	5645	10.88	8408	3633	1038	**CS102**	132MC4	**PS102**	254/256TC
125.1	1.5	7255	13.99	10621	3873	1107	**CS102**	132MC4	**PS102**	254/256TC
113.4	1.4	8001	15.43	11063	3967	1133	**CS102**	132MC4	**PS102**	254/256TC
101.7	1.3	8927	17.21	11506	4071	1163	**CS102**	132MC4	**PS102**	254/256TC
92.1	1.3	9854	19.00	12391	4164	1190	**CS102**	132MC4	**PS102**	254/256TC
84.0	1.1	10802	20.83	12391	4250	1214	**CS102**	132MC4	**PS102**	254/256TC
79.1	1.1	11474	22.13	12391	4305	1230	**CS102**	132MC4	**PS102**	254/256TC
72.1	1.1	12590	24.28	13276	4389	1254	**CS102**	132MC4	**PS102**	254/256TC
206.3	3.0	4443	8.48	13276	4850	1386	**-**	-	**PS122**	254/256TC
188.2	3.1	4870	9.30	15046	4971	1420	**-**	-	**PS122**	254/256TC
170.9	2.8	5363	10.24	15046	5100	1457	**-**	-	**PS122**	254/256TC
153.3	2.8	5980	11.42	16816	5246	1499	**-**	-	**PS122**	254/256TC
138.6	2.9	6613	12.63	19472	5381	1538	**-**	-	**PS122**	254/256TC
126.5	2.9	7249	13.84	21242	5505	1573	**-**	-	**PS122**	254/256TC
103.0	2.6	8901	16.99	23012	5781	1652	**-**	-	**PS122**	254/256TC
82.4	2.2	11020	21.25	24782	6085	1739	**CS122**	132MC4	**PS122**	254/256TC
78.2	2.1	11599	22.37	24782	6151	1758	**CS122**	132MC4	**PS122**	254/256TC
75.1	2.1	12079	23.29	25667	6203	1772	**CS122**	132MC4	**PS122**	254/256TC
66.9	2.0	13564	26.15	26552	6347	1814	**CS122**	132MC4	**PS122**	254/256TC
61.2	1.8	14832	28.60	26552	6454	1844	**CS122**	132MC4	**PS122**	254/256TC
57.4	1.7	15824	30.51	26552	6529	1865	**CS122**	132MC4	**PS122**	254/256TC
53.4	1.6	16987	32.76	26552	6608	1888	**CS122**	132MC4	**PS122**	254/256TC
52.3	1.5	17344	33.44	26552	6630	1894	**CS122**	132MC4	**PS122**	254/256TC
49.7	1.5	18255	35.20	26552	6684	1910	**CS122**	132MC4	**PS122**	254/256TC
42.6	1.2	21297	41.07	26552	6744	1952	**CS122**	132MC4	**PS122**	254/256TC
40.1	1.2	22610	43.60	26552	6744	1966	**CS122**	132MC4	**PS122**	254/256TC
239.1	3.3	3795	7.32	12376	7245	4140	**S142**	132MC4	**-**	-
213.2	3.3	4257	8.21	13883	7462	4159	**S142**	132MC4	**-**	-
188.5	3.3	4815	9.29	15711	7695	4159	**S142**	132MC4	**-**	-
176.5	3.3	5141	9.91	16778	7819	4159	**S142**	132MC4	**-**	-
153.4	3.1	5915	11.41	18194	7868	4159	**S142**	132MC4	**-**	-
136.6	2.5	6645	12.81	16928	7868	4159	**S142**	132MC4	**S142**	254/256TC
122.6	2.1	7401	14.27	15765	7868	4159	**S142**	132MC4	**S142**	254/256TC
109.3	2.1	8301	16.01	17133	7868	4159	**S142**	132MC4	**S142**	254/256TC
96.6	2.1	9391	18.11	19382	7868	4159	**S142**	132MC4	**S142**	254/256TC
90.5	2.1	10026	19.33	20699	7868	4159	**S142**	132MC4	**S142**	254/256TC

15 HP

Output speed [rpm]	Service factor sf	Output torque [in-lbs]	Exact ratio i	Max. torque [in-lbs]	OHL		Gearmotor		Gear Reducer	
					Output shaft [lbs]	Hollow bore [lbs]	Reducer	Motor	Reducer	NEMA C-input
78.7	1.9	11536	22.24	21418	7868	4159	**S142**	132MC4	**S142**	254/256TC
69.3	1.4	13100	25.26	18710	7868	4159	**S142**	132MC4	**S142**	254/256TC
61.8	1.4	14694	28.33	20984	7868	4159	**S142**	132MC4	**S142**	254/256TC
54.6	1.4	16623	32.05	23739	7868	4159	**S142**	132MC4	**S142**	254/256TC
51.1	1.4	17748	34.22	25346	7868	4159	**S142**	132MC4	**S142**	254/256TC
44.4	1.9	20420	39.38	39216	7868	4159	**S142**	132MC4	**S142**	254/256TC
38.2	1.5	23240	45.77	35517	7868	4159	**S143**	132MC4	**S143**	254/256TC
34.3	1.5	25884	50.97	39561	7868	4159	**S143**	132MC4	**S143**	254/256TC
30.6	1.4	29032	57.17	41904	7868	4159	**S143**	132MC4	**S143**	254/256TC
27.1	1.3	32843	64.68	42257	7868	4159	**S143**	132MC4	**S143**	254/256TC
25.3	1.2	35067	69.06	43158	7868	4159	**S143**	132MC4	**S143**	254/256TC
64.6	3.8	14198	27.11	53894	8992	4361	**-**	-	**S152**	254/256TC
58.8	3.8	15583	29.75	59164	8992	4361	**-**	-	**S152**	254/256TC
51.8	3.8	17699	33.79	67198	8992	4361	**-**	-	**S152**	254/256TC
45.1	3.3	20344	38.84	68053	8992	4361	**-**	-	**S152**	254/256TC
43.6	2.7	20364	40.10	55595	8992	4361	**S153**	132MC4	**S153**	254/256TC
39.1	2.7	22728	44.76	62042	8992	4361	**S153**	132MC4	**S153**	254/256TC
34.1	2.7	26092	51.38	69614	8992	4361	**S153**	132MC4	**S153**	254/256TC
31.0	2.6	28637	56.39	73053	8992	4361	**S153**	132MC4	**S153**	254/256TC
27.3	2.4	32526	64.05	77845	8992	4361	**S153**	132MC4	**S153**	254/256TC
23.8	1.8	37387	73.63	68854	8992	4361	**S153**	132MC4	**S153**	254/256TC
20.1	1.4	44259	87.16	62889	8992	4361	**S153**	132MC4	**S153**	254/256TC
18.0	1.4	49396	97.27	70191	8992	4361	**S153**	132MC4	**S153**	254/256TC
15.7	1.4	56707	111.67	80575	8992	4361	**S153**	132MC4	**S153**	254/256TC
14.3	1.4	62239	122.57	84402	8992	4361	**S153**	132MC4	**S153**	254/256TC
12.6	1.1	70691	139.21	80913	8992	4361	**S153**	132MC4	**S153**	254/256TC

20 HP

Output speed [rpm]	Service factor sf	Output torque [in-lbs]	Exact ratio i	Max. torque [in-lbs]	OHL		Gearmotor		Gear Reducer	
					Output shaft [lbs]	Hollow bore [lbs]	Reducer	Motor	Reducer	NEMA C-input
217.1	1.3	5631	8.06	7523	3256	930	**-**	-	**PS102**	254/256TC
197.8	1.3	6178	8.85	7966	3333	952	**-**	-	**PS102**	254/256TC
160.8	1.1	7602	10.88	8408	3504	1001	**-**	-	**PS102**	254/256TC
125.1	1.1	9770	13.99	10621	3707	1059	**-**	-	**PS102**	254/256TC
113.4	1.0	10775	15.43	11063	3784	1081	**-**	-	**PS102**	254/256TC
206.3	2.2	5924	8.48	13276	4707	1345	**-**	-	**PS122**	254/256TC
188.2	2.3	6493	9.30	15046	4815	1376	**-**	-	**PS122**	254/256TC
170.9	2.1	7150	10.24	15046	4928	1408	**-**	-	**PS122**	254/256TC
153.3	2.1	7973	11.42	16816	5054	1444	**-**	-	**PS122**	254/256TC
138.6	2.2	8818	12.63	19472	5169	1477	**-**	-	**PS122**	254/256TC
126.5	2.2	9665	13.84	21242	5273	1506	**-**	-	**PS122**	254/256TC

20 HP

Output speed [rpm]	Service factor sf	Output torque [in-lbs]	Exact ratio i	Max. torque [in-lbs]	OHL		Gearmotor		Gear Reducer	
					Output shaft [lbs]	Hollow bore [lbs]	Reducer	Motor	Reducer	NEMA C-input
103.0	1.9	11868	16.99	23012	5496	1570	-	-	**PS122**	254/256TC
82.4	1.7	14841	21.25	24782	5718	1634	-	-	**PS122**	254/256TC
78.2	1.6	15621	22.37	24782	5764	1647	-	-	**PS122**	254/256TC
75.1	1.6	16267	23.29	25667	5800	1657	-	-	**PS122**	254/256TC
66.9	1.5	18266	26.15	26552	5895	1684	-	-	**PS122**	254/256TC
61.2	1.3	19974	28.60	26552	5960	1703	-	-	**PS122**	254/256TC
57.4	1.2	21310	30.51	26552	6001	1715	-	-	**PS122**	254/256TC
53.4	1.2	22876	32.76	26552	6041	1726	-	-	**PS122**	254/256TC
52.3	1.1	23357	33.44	26552	6052	1729	-	-	**PS122**	254/256TC
49.7	1.1	24583	35.20	26552	6075	1736	-	-	**PS122**	254/256TC
239.1	3.3	5111	7.32	16953	6982	3990	-	-	**S142**	254/256TC
213.2	3.3	5732	8.21	19017	7166	4095	-	-	**S142**	254/256TC
188.5	3.3	6485	9.29	21522	7361	4159	-	-	**S142**	254/256TC
176.5	3.3	6924	9.91	22983	7462	4159	-	-	**S142**	254/256TC
153.4	3.1	7966	11.41	24924	7673	4159	-	-	**S142**	254/256TC
136.6	2.6	8948	12.81	23189	7839	4159	-	-	**S142**	254/256TC
122.6	2.2	9967	14.27	21596	7868	4159	-	-	**S142**	254/256TC
109.3	2.1	11179	16.01	23470	7868	4159	-	-	**S142**	254/256TC
96.6	2.1	12646	18.11	26551	7868	4159	-	-	**S142**	254/256TC
90.5	2.1	13502	19.33	28355	7868	4159	-	-	**S142**	254/256TC
78.7	1.9	15535	22.24	29340	7868	4159	-	-	**S142**	254/256TC
69.3	1.5	17642	25.26	25630	7868	4159	-	-	**S142**	254/256TC
61.8	1.5	19788	28.33	28745	7868	4159	-	-	**S142**	254/256TC
54.6	1.5	22385	32.05	32519	7868	4159	-	-	**S142**	254/256TC
51.1	1.5	23900	34.22	34721	7868	4159	-	-	**S142**	254/256TC
44.4	1.4	27499	39.38	39216	7868	4159	-	-	**S142**	254/256TC
38.2	1.1	31296	45.77	35517	7868	4159	-	-	**S143**	254/256TC
34.3	1.1	34857	50.97	39561	7868	4159	-	-	**S143**	254/256TC
30.6	1.1	39097	57.17	41904	7868	4159	-	-	**S143**	254/256TC
140.4	3.4	8704	12.46	29258	8992	4361	-	-	**S152**	254/256TC
125.8	3.4	9714	13.91	32640	8992	4361	-	-	**S152**	254/256TC
109.6	3.4	11152	15.97	37477	8992	4361	-	-	**S152**	254/256TC
99.8	3.4	12240	17.53	41140	8992	4361	-	-	**S152**	254/256TC
87.9	3.4	13902	19.91	46729	8992	4361	-	-	**S152**	254/256TC
76.5	3.4	15980	22.88	53726	8992	4361	-	-	**S152**	254/256TC
64.6	2.8	18930	27.11	53894	8992	4361	-	-	**S152**	254/256TC
58.8	2.8	20777	29.75	59164	8992	4361	-	-	**S152**	254/256TC
51.8	2.8	23599	33.79	67198	8992	4361	-	-	**S152**	254/256TC
45.1	2.5	27126	38.84	68053	8992	4361	-	-	**S152**	254/256TC
43.6	2.0	27424	40.10	55595	8992	4361	-	-	**S153**	254/256TC
39.1	2.0	30607	44.76	62042	8992	4361	-	-	**S153**	254/256TC

20 HP

Output speed [rpm]	Service factor sf	Output torque [in-lbs]	Exact ratio i	Max. torque [in-lbs]	OHL		Gearmotor		Gear Reducer	
					Output shaft [lbs]	Hollow bore [lbs]	Reducer	Motor	Reducer	NEMA C-input
34.1	2.0	35137	51.38	69614	8992	4361	-	-	**S153**	254/256TC
31.0	1.9	38565	56.39	73053	8992	4361	-	-	**S153**	254/256TC
27.3	1.8	43802	64.05	77845	8992	4361	-	-	**S153**	254/256TC
23.8	1.4	50348	73.63	68854	8992	4361	-	-	**S153**	254/256TC
20.1	1.1	59602	87.16	62889	8992	4361	-	-	**S153**	254/256TC
18.0	1.1	66520	97.27	70191	8992	4361	-	-	**S153**	254/256TC
15.7	1.1	76365	111.67	80575	8992	4361	-	-	**S153**	254/256TC
14.3	1.0	83815	122.57	84402	8992	4361	-	-	**S153**	254/256TC

25 HP

Output speed [rpm]	Service factor sf	Output torque [in-lbs]	Exact ratio i	Max. torque [in-lbs]	OHL		Gearmotor		Gear Reducer	
					Output shaft [lbs]	Hollow bore [lbs]	Reducer	Motor	Reducer	NEMA C-input
206.3	1.8	7405	8.48	13276	4565	1304	-	-	**PS122**	284/286TC
188.2	1.9	8116	9.30	15046	4659	1331	-	-	**PS122**	284/286TC
170.9	1.7	8938	10.24	15046	4756	1359	-	-	**PS122**	284/286TC
153.3	1.7	9966	11.42	16816	4862	1389	-	-	**PS122**	284/286TC
138.6	1.8	11022	12.63	19472	4957	1416	-	-	**PS122**	284/286TC
126.5	1.8	12081	13.84	21242	5040	1440	-	-	**PS122**	284/286TC
103.0	1.6	14835	16.99	23012	5210	1489	-	-	**PS122**	284/286TC
82.4	1.3	18551	21.25	24782	5361	1532	-	-	**PS122**	284/286TC
78.2	1.3	19526	22.37	24782	5389	1540	-	-	**PS122**	284/286TC
75.1	1.3	20333	23.29	25667	5409	1545	-	-	**PS122**	284/286TC
66.9	1.2	22832	26.15	26552	5456	1559	-	-	**PS122**	284/286TC
61.2	1.1	24967	28.60	26552	5479	1566	-	-	**PS122**	284/286TC
425.0	3.4	3595	4.12	12294	5902	3372	-	-	**S142**	284/286TC
381.6	3.4	4004	4.59	13702	6060	3463	-	-	**S142**	284/286TC
340.2	3.4	4491	5.14	15378	6227	3558	-	-	**S142**	284/286TC
300.7	3.4	5080	5.82	17382	6405	3660	-	-	**S142**	284/286TC
281.7	3.4	5424	6.21	18579	6498	3713	-	-	**S142**	284/286TC
239.1	2.7	6388	7.32	16953	6726	3843	-	-	**S142**	284/286TC
213.2	2.7	7165	8.21	19017	6879	3931	-	-	**S142**	284/286TC
188.5	2.7	8106	9.29	21522	7036	4021	-	-	**S142**	284/286TC
176.5	2.7	8654	9.91	22983	7116	4066	-	-	**S142**	284/286TC
153.4	2.5	9957	11.41	24924	7274	4156	-	-	**S142**	284/286TC
136.6	2.1	11185	12.81	23189	7390	4159	-	-	**S142**	284/286TC
122.6	1.7	12458	14.27	21596	7484	4159	-	-	**S142**	284/286TC
109.3	1.7	13973	16.01	23470	7566	4159	-	-	**S142**	284/286TC
96.6	1.7	15808	18.11	26551	7629	4159	-	-	**S142**	284/286TC
90.5	1.7	16878	19.33	28355	7651	4159	-	-	**S142**	284/286TC
78.7	1.5	19419	22.24	29340	7664	4159	-	-	**S142**	284/286TC
69.3	1.2	22052	25.26	25630	7632	4159	-	-	**S142**	284/286TC

25 HP

Output speed [rpm]	Service factor sf	Output torque [in-lbs]	Exact ratio i	Max. torque [in-lbs]	OHL		Gearmotor		Gear Reducer	
					Output shaft [lbs]	Hollow bore [lbs]	Reducer	Motor	Reducer	NEMA C-input
61.8	1.2	24735	28.33	28745	7560	4159	-	-	**S142**	284/286TC
54.6	1.2	27982	32.05	32519	7429	4159	-	-	**S142**	284/286TC
51.1	1.2	29876	34.22	34721	7335	4159	-	-	**S142**	284/286TC
44.4	1.1	34374	39.38	39216	7064	4037	-	-	**S142**	284/286TC
140.4	2.7	10880	12.46	29258	8992	4361	-	-	**S152**	284/286TC
125.8	2.7	12143	13.91	32640	8992	4361	-	-	**S152**	284/286TC
109.6	2.7	13940	15.97	37477	8992	4361	-	-	**S152**	284/286TC
99.8	2.7	15300	17.53	41140	8992	4361	-	-	**S152**	284/286TC
87.9	2.7	17378	19.91	46729	8992	4361	-	-	**S152**	284/286TC
76.5	2.7	19975	22.88	53726	8992	4361	-	-	**S152**	284/286TC
64.6	2.3	23663	27.11	53894	8992	4361	-	-	**S152**	284/286TC
58.8	2.3	25971	29.75	59164	8992	4361	-	-	**S152**	284/286TC
51.8	2.3	29498	33.79	67198	8992	4361	-	-	**S152**	284/286TC
45.1	2.0	33907	38.84	68053	8992	4361	-	-	**S152**	284/286TC
43.6	1.6	34280	40.10	55595	8992	4361	-	-	**S153**	284/286TC
39.1	1.6	38259	44.76	62042	8992	4361	-	-	**S153**	284/286TC
34.1	1.6	43921	51.38	69614	8992	4361	-	-	**S153**	284/286TC
31.0	1.5	48206	56.39	73053	8992	4361	-	-	**S153**	284/286TC
27.3	1.4	54752	64.05	77845	8992	4361	-	-	**S153**	284/286TC
23.8	1.1	62935	73.63	68854	8992	4361	-	-	**S153**	284/286TC

30 HP

Output speed [rpm]	Service factor sf	Output torque [in-lbs]	Exact ratio i	Max. torque [in-lbs]	OHL		Gearmotor		Gear Reducer	
					Output shaft [lbs]	Hollow bore [lbs]	Reducer	Motor	Reducer	NEMA C-input
206.3	1.5	8886	8.48	13276	4422	1264	-	-	**PS122**	284/286TC
188.2	1.5	9740	9.30	15046	4503	1286	-	-	**PS122**	284/286TC
170.9	1.4	10725	10.24	15046	4584	1310	-	-	**PS122**	284/286TC
153.3	1.4	11959	11.42	16816	4670	1334	-	-	**PS122**	284/286TC
138.6	1.5	13227	12.63	19472	4745	1356	-	-	**PS122**	284/286TC
126.5	1.5	14498	13.84	21242	4808	1374	-	-	**PS122**	284/286TC
103.0	1.3	17802	16.99	23012	4925	1407	-	-	**PS122**	284/286TC
82.4	1.1	22261	21.25	24782	5004	1430	-	-	**PS122**	284/286TC
78.2	1.1	23431	22.37	24782	5013	1432	-	-	**PS122**	284/286TC
75.1	1.1	24400	23.29	25667	5018	1434	-	-	**PS122**	284/286TC
425.0	2.9	4313	4.12	12294	5758	3290	-	-	**S142**	284/286TC
381.6	2.9	4804	4.59	13702	5899	3371	-	-	**S142**	284/286TC
340.2	2.9	5389	5.14	15378	6047	3455	-	-	**S142**	284/286TC
300.7	2.9	6096	5.82	17382	6201	3544	-	-	**S142**	284/286TC
281.7	2.9	6509	6.21	18579	6281	3589	-	-	**S142**	284/286TC
239.1	2.2	7666	7.32	16953	6470	3697	-	-	**S142**	284/286TC
213.2	2.2	8598	8.21	19017	6592	3767	-	-	**S142**	284/286TC

30 HP

Output speed [rpm]	Service factor sf	Output torque [in-lbs]	Exact ratio i	Max. torque [in-lbs]	OHL		Gearmotor		Gear Reducer	
					Output shaft [lbs]	Hollow bore [lbs]	Reducer	Motor	Reducer	NEMA C-input
188.5	2.2	9727	9.29	21522	6712	3835	-	-	**S142**	284/286TC
176.5	2.2	10385	9.91	22983	6769	3868	-	-	**S142**	284/286TC
153.4	2.1	11949	11.41	24924	6875	3929	-	-	**S142**	284/286TC
136.6	1.7	13422	12.81	23189	6942	3967	-	-	**S142**	284/286TC
122.6	1.4	14950	14.27	21596	6985	3991	-	-	**S142**	284/286TC
109.3	1.4	16768	16.01	23470	7006	4003	-	-	**S142**	284/286TC
96.6	1.4	18969	18.11	26551	6996	3998	-	-	**S142**	284/286TC
90.5	1.4	20253	19.33	28355	6974	3985	-	-	**S142**	284/286TC
78.7	1.3	23303	22.24	29340	6886	3935	-	-	**S142**	284/286TC
268.3	4.0	6833	6.52	27216	8392	4361	-	-	**S152**	284/286TC
240.4	3.8	7627	7.28	28845	8634	4361	-	-	**S152**	284/286TC
209.4	3.6	8755	8.36	31252	8939	4361	-	-	**S152**	284/286TC
190.8	3.5	9610	9.17	33199	8992	4361	-	-	**S152**	284/286TC
168.0	3.4	10915	10.42	37014	8992	4361	-	-	**S152**	284/286TC
140.4	2.2	13056	12.46	29258	8992	4361	-	-	**S152**	284/286TC
125.8	2.2	14572	13.91	32640	8992	4361	-	-	**S152**	284/286TC
109.6	2.2	16728	15.97	37477	8992	4361	-	-	**S152**	284/286TC
99.8	2.2	18360	17.53	41140	8992	4361	-	-	**S152**	284/286TC
87.9	2.2	20854	19.91	46729	8992	4361	-	-	**S152**	284/286TC
76.5	2.2	23970	22.88	53726	8992	4361	-	-	**S152**	284/286TC
64.6	1.9	28395	27.11	53894	8992	4361	-	-	**S152**	284/286TC
58.8	1.9	31166	29.75	59164	8992	4361	-	-	**S152**	284/286TC
51.8	1.9	35398	33.79	67198	8992	4361	-	-	**S152**	284/286TC
45.1	1.7	40688	38.84	68053	8992	4361	-	-	**S152**	284/286TC
43.6	1.4	41136	40.10	55595	8992	4361	-	-	**S153**	284/286TC
39.1	1.4	45910	44.76	62042	8992	4361	-	-	**S153**	284/286TC
34.1	1.3	52705	51.38	69614	8992	4361	-	-	**S153**	284/286TC
31.0	1.3	57847	56.39	73053	8992	4361	-	-	**S153**	284/286TC
27.3	1.2	65703	64.05	77845	8992	4361	-	-	**S153**	284/286TC

5.2 IS GEAR REDUCER - fs=1, 1750 rpm

Maximum torque [in-lbs]	Output speed [rpm]	Exact ratio i	Maximum Power [HP]	OHL			Gear Reducer	
				Output shaft [lbs]	Hollow bore [lbs]	Input shaft [lbs]	Motorized Input	Shaft Input
1505	202.9	8.63	5.05	689	689	161	**PS052**	**IS052**
1682	157.1	11.14	4.37	743	743	182	**PS052**	**IS052**
1770	145.8	12.00	4.27	755	755	185	**PS052**	**IS052**
1859	128.2	13.66	3.94	786	786	195	**PS052**	**IS052**
2124	114.6	15.27	4.02	787	787	193	**PS052**	**IS052**
2124	107.5	16.29	3.77	810	810	200	**PS052**	**IS052**
2124	93.9	18.63	3.3	861	861	215	**PS052**	**IS052**
2124	88.7	19.73	3.11	884	884	221	**PS052**	**IS052**
2301	83.2	21.04	3.16	883	883	219	**PS052**	**IS052**
2301	81.3	21.53	3.09	893	893	221	**PS052**	**IS052**
2301	72.7	24.07	2.77	939	939	231	**PS052**	**IS052**
2567	69.4	25.20	2.95	919	919	226	**PS052**	**IS052**
2567	67.9	25.79	2.88	929	929	228	**PS052**	**IS052**
2567	62.9	27.81	2.67	962	962	234	**PS052**	**IS052**
2567	58.3	30.00	2.47	996	996	240	**PS052**	**IS052**
2655	53.8	32.55	2.36	1021	1021	244	**PS052**	**IS052**
2655	53.0	33.00	2.33	1027	1027	245	**PS052**	**IS052**
2655	51.3	34.09	2.25	1042	1042	247	**PS052**	**IS052**
2921	47.9	36.55	2.31	1036	1036	245	**PS052**	**IS052**
2921	45.2	38.75	2.18	1065	1065	249	**PS052**	**IS052**
3098	43.9	39.90	2.25	1053	1053	247	**PS052**	**IS052**
3098	41.1	42.63	2.1	1087	1087	252	**PS052**	**IS052**
3098	38.0	46.00	1.95	1126	1126	256	**PS052**	**IS052**
3098	37.1	47.20	1.9	1140	1140	258	**PS052**	**IS052**
3098	33.5	52.25	1.71	1194	1194	264	**PS052**	**IS052**
3098	30.2	57.86	1.55	1251	1251	269	**PS052**	**IS052**
3098	29.4	59.42	1.51	1266	1266	270	**PS052**	**IS052**
3098	24.0	72.83	1.23	1349	1349	278	**PS052**	**IS052**
3098	48.0	36.50	2.51	1010	1010	241	**PS053**	**IS053**
3098	37.1	47.14	1.94	1139	1139	258	**PS053**	**IS053**
3098	30.3	57.79	1.58	1250	1250	269	**PS053**	**IS053**
3098	27.4	63.74	1.44	1306	1306	273	**PS053**	**IS053**
3098	23.6	74.20	1.23	1349	1349	279	**PS053**	**IS053**
3098	22.4	78.14	1.17	1349	1349	281	**PS053**	**IS053**
3098	18.3	95.84	0.95	1349	1349	287	**PS053**	**IS053**
3098	14.9	117.48	0.78	1349	1349	293	**PS053**	**IS053**
3098	12.7	137.45	0.67	1349	1349	296	**PS053**	**IS053**
3098	9.9	177.55	0.52	1349	1349	301	**PS053**	**IS053**
3098	8.8	198.45	0.46	1349	1349	302	**PS053**	**IS053**
3098	8.0	217.64	0.42	1349	1349	304	**PS053**	**IS053**
3098	6.8	256.33	0.36	1349	1349	305	**PS053**	**IS053**
3098	5.6	314.21	0.29	1349	1349	307	**PS053**	**IS053**
2921	218.8	8.00	10.56	1058	423	79	**PS062**	**IS062**

5.2 IS GEAR REDUCER - fs=1, 1750 rpm

Maximum torque [in-lbs]	Output speed [rpm]	Exact ratio i	Maximum Power [HP]	OHL			Gear Reducer	
				Output shaft [lbs]	Hollow bore [lbs]	Input shaft [lbs]	Motorized Input	Shaft Input
2921	196.2	8.92	9.47	1114	446	103	**PS062**	**IS062**
3186	183.3	9.55	9.65	1107	443	99	**PS062**	**IS062**
3186	164.4	10.65	8.66	1166	467	122	**PS062**	**IS062**
3452	149.5	11.71	8.53	1177	471	124	**PS062**	**IS062**
3717	134.0	13.06	8.23	1198	479	131	**PS062**	**IS062**
3717	131.0	13.36	8.05	1211	485	135	**PS062**	**IS062**
3983	109.8	15.94	7.23	1277	511	154	**PS062**	**IS062**
3983	108.3	16.16	7.13	1286	514	156	**PS062**	**IS062**
3983	90.7	19.29	5.97	1402	561	182	**PS062**	**IS062**
4071	89.5	19.55	6.02	1397	559	181	**PS062**	**IS062**
4160	75.5	23.18	5.19	1501	600	200	**PS062**	**IS062**
4160	73.7	23.75	5.07	1519	607	203	**PS062**	**IS062**
4248	69.6	25.14	4.89	1546	618	207	**PS062**	**IS062**
4248	63.3	27.66	4.44	1617	647	217	**PS062**	**IS062**
4425	58.3	30.00	4.27	1651	661	221	**PS062**	**IS062**
4779	51.6	33.93	4.07	1692	677	225	**PS062**	**IS062**
5310	47.9	36.57	4.2	1669	667	222	**PS062**	**IS062**
5310	44.4	39.38	3.9	1731	692	229	**PS062**	**IS062**
5310	40.1	43.64	3.52	1820	728	237	**PS062**	**IS062**
5310	38.0	46.10	3.33	1869	748	242	**PS062**	**IS062**
5310	36.2	48.30	3.18	1911	764	245	**PS062**	**IS062**
5310	32.7	53.53	2.87	2007	803	252	**PS062**	**IS062**
5310	31.8	55.00	2.79	2032	813	254	**PS062**	**IS062**
5310	25.9	67.47	2.28	2234	893	265	**PS062**	**IS062**
5310	52.1	33.57	4.67	1598	639	214	**PS063**	**IS063**
5310	46.3	37.77	4.15	1696	678	225	**PS063**	**IS063**
5310	43.7	40.05	3.92	1745	698	230	**PS063**	**IS063**
5310	35.6	49.13	3.19	1927	771	246	**PS063**	**IS063**
5310	31.6	55.29	2.84	2037	815	254	**PS063**	**IS063**
5310	29.8	58.72	2.67	2095	838	258	**PS063**	**IS063**
5310	26.6	65.85	2.38	2209	884	264	**PS063**	**IS063**
5310	25.6	68.25	2.3	2245	898	266	**PS063**	**IS063**
5310	23.8	73.63	2.13	2248	899	270	**PS063**	**IS063**
5310	21.5	81.43	1.93	2248	899	274	**PS063**	**IS063**
5310	17.5	99.89	1.57	2248	899	282	**PS063**	**IS063**
5310	13.8	126.43	1.24	2248	899	289	**PS063**	**IS063**
5310	11.6	150.85	1.04	2248	899	294	**PS063**	**IS063**
5310	9.6	182.53	0.86	2248	899	298	**PS063**	**IS063**
5310	9.5	185.05	0.85	2248	899	298	**PS063**	**IS063**
5310	8.0	217.79	0.72	2248	899	301	**PS063**	**IS063**
5310	6.5	267.16	0.59	2248	899	304	**PS063**	**IS063**
4868	238.4	7.34	19.18	2484	710	284	**PS082**	**IS082**
5310	217.1	8.06	19.05	2538	725	286	**PS082**	**IS082**

5.2 IS GEAR REDUCER - fs=1, 1750 rpm

Maximum torque [in-lbs]	Output speed [rpm]	Exact ratio i	Maximum Power [HP]	OHL			Gear Reducer	
				Output shaft [lbs]	Hollow bore [lbs]	Input shaft [lbs]	Motorized Input	Shaft Input
5753	176.0	9.94	16.73	2715	776	333	**PS082**	**IS082**
6196	150.8	11.61	15.44	2845	813	359	**PS082**	**IS082**
6638	137.2	12.75	15.06	2914	833	367	**PS082**	**IS082**
6727	124.6	14.04	13.85	3019	863	391	**PS082**	**IS082**
6815	113.4	15.43	12.78	3124	893	413	**PS082**	**IS082**
6815	111.3	15.73	12.53	3148	899	418	**PS082**	**IS082**
6815	101.2	17.29	11.4	3266	933	441	**PS082**	**IS082**
6815	92.0	19.03	10.36	3389	968	462	**PS082**	**IS082**
6815	86.9	20.14	9.79	3464	990	474	**PS082**	**IS082**
7081	79.1	22.13	9.26	3569	1020	484	**PS082**	**IS082**
7081	72.9	24.00	8.53	3682	1052	499	**PS082**	**IS082**
7081	67.2	26.05	7.86	3799	1085	513	**PS082**	**IS082**
7966	64.1	27.29	8.44	3793	1084	501	**PS082**	**IS082**
7966	61.0	28.67	8.03	3866	1105	509	**PS082**	**IS082**
7966	59.1	29.60	7.78	3914	1118	514	**PS082**	**IS082**
8851	55.1	31.78	8.06	3949	1128	509	**PS082**	**IS082**
8851	50.1	34.91	7.33	4047	1170	523	**PS082**	**IS082**
8851	49.3	35.50	7.21	4047	1178	526	**PS082**	**IS082**
8851	43.7	40.05	6.39	4047	1234	542	**PS082**	**IS082**
8851	40.6	43.05	5.95	4047	1269	551	**PS082**	**IS082**
8851	34.8	50.25	5.09	4047	1347	568	**PS082**	**IS082**
8851	32.2	54.27	4.72	4047	1387	576	**PS082**	**IS082**
8851	28.2	61.98	4.13	4047	1458	588	**PS082**	**IS082**
8851	25.9	67.52	3.87	4047	1506	595	**PS083**	**IS083**
8851	23.6	74.18	3.52	4047	1561	602	**PS083**	**IS083**
8851	21.4	81.71	3.2	4047	1618	608	**PS083**	**IS083**
8851	19.1	91.49	2.86	4047	1619	615	**PS083**	**IS083**
8851	17.4	100.62	2.6	4047	1619	620	**PS083**	**IS083**
8851	14.9	117.17	2.23	4047	1619	627	**PS083**	**IS083**
8851	13.6	128.73	2.03	4047	1619	631	**PS083**	**IS083**
8851	12.8	136.34	1.92	4047	1619	634	**PS083**	**IS083**
8851	11.0	158.76	1.65	4047	1619	639	**PS083**	**IS083**
8851	9.5	184.88	1.41	4047	1619	644	**PS083**	**IS083**
8851	8.6	203.11	1.29	4047	1619	646	**PS083**	**IS083**
8851	8.5	205.34	1.27	4047	1619	646	**PS083**	**IS083**
8851	7.7	226.04	1.16	4047	1619	649	**PS083**	**IS083**
8851	7.0	250.50	1.04	4047	1619	651	**PS083**	**IS083**
8851	6.6	266.13	0.98	4047	1619	652	**PS083**	**IS083**
8851	6.0	292.36	0.89	4047	1619	654	**PS083**	**IS083**
8851	5.5	315.73	0.83	4047	1619	655	**PS083**	**IS083**
8851	4.8	360.58	0.73	4047	1619	657	**PS083**	**IS083**
7523	217.1	8.06	26.99	3132	895	145	**PS102**	**IS102**
7966	197.8	8.85	26.04	3215	919	164	**PS102**	**IS102**

5.2 IS GEAR REDUCER - fs=1, 1750 rpm

Maximum torque [in-lbs]	Output speed [rpm]	Exact ratio i	Maximum Power [HP]	OHL			Gear Reducer	
				Output shaft [lbs]	Hollow bore [lbs]	Input shaft [lbs]	Motorized Input	Shaft Input
8408	160.8	10.88	22.34	3451	986	236	**PS102**	**IS102**
8851	137.2	12.75	20.08	3636	1039	280	**PS102**	**IS102**
10621	125.1	13.99	21.96	3651	1043	244	**PS102**	**IS102**
11063	113.4	15.43	20.74	3765	1076	267	**PS102**	**IS102**
11506	101.7	17.21	19.33	3901	1114	295	**PS102**	**IS102**
12391	92.1	19.00	18.86	3997	1142	304	**PS102**	**IS102**
12391	84.0	20.83	17.21	4145	1184	336	**PS102**	**IS102**
12391	79.1	22.13	16.2	4245	1213	356	**PS102**	**IS102**
13276	72.1	24.28	15.82	4344	1241	363	**PS102**	**IS102**
13276	66.5	26.33	14.58	4486	1282	387	**PS102**	**IS102**
13276	58.6	29.87	12.86	4713	1347	421	**PS102**	**IS102**
13276	54.0	32.40	11.85	4866	1390	441	**PS102**	**IS102**
12391	50.1	34.91	10.27	4946	1448	472	**PS102**	**IS102**
13276	45.7	38.30	10.02	4946	1483	476	**PS102**	**IS102**
12391	41.1	42.53	8.43	4946	1561	508	**PS102**	**IS102**
11506	39.8	44.00	7.56	4946	1598	524	**PS102**	**IS102**
14161	37.1	47.13	8.69	4946	1589	502	**PS102**	**IS102**
12391	34.8	50.25	7.13	4946	1662	533	**PS102**	**IS102**
11506	31.7	55.14	6.04	4946	1738	554	**PS102**	**IS102**
14161	29.5	59.40	6.89	4946	1737	537	**PS102**	**IS102**
14161	25.8	67.84	6.04	4946	1826	554	**PS102**	**IS102**
14161	23.6	74.18	5.64	4946	1889	564	**PS103**	**IS103**
14161	21.5	81.39	5.14	4946	1956	574	**PS103**	**IS103**
14161	19.5	89.77	4.66	4946	2023	583	**PS103**	**IS103**
14161	17.5	100.15	4.18	4946	2023	592	**PS103**	**IS103**
14161	15.8	110.55	3.78	4946	2023	600	**PS103**	**IS103**
14161	14.4	121.29	3.45	4946	2023	606	**PS103**	**IS103**
14161	13.6	128.73	3.25	4946	2023	610	**PS103**	**IS103**
14161	12.4	141.24	2.96	4946	2023	615	**PS103**	**IS103**
14161	10.1	173.78	2.41	4946	2023	626	**PS103**	**IS103**
14161	9.3	188.51	2.22	4946	2023	630	**PS103**	**IS103**
14161	8.6	203.11	2.06	4946	2023	633	**PS103**	**IS103**
14161	7.8	222.85	1.88	4946	2023	636	**PS103**	**IS103**
14161	7.8	224.76	1.86	4946	2023	636	**PS103**	**IS103**
14161	6.4	274.20	1.53	4946	2023	643	**PS103**	**IS103**
14161	6.2	280.89	1.49	4946	2023	643	**PS103**	**IS103**
14161	6.0	292.36	1.43	4946	2023	645	**PS103**	**IS103**
14161	5.5	320.79	1.3	4946	2023	647	**PS103**	**IS103**
14161	5.1	345.60	1.21	4946	2023	649	**PS103**	**IS103**
14161	4.4	394.69	1.06	4946	2023	652	**PS103**	**IS103**
13276	206.3	8.48	45.27	4000	1143	663	**PS122**	**IS122**
15046	188.2	9.30	46.8	3992	1141	656	**PS122**	**IS122**
15046	170.9	10.24	42.5	4168	1191	677	**PS122**	**IS122**

5.2 IS GEAR REDUCER - fs=1, 1750 rpm

Maximum torque [in-lbs]	Output speed [rpm]	Exact ratio i	Maximum Power [HP]	OHL			Gear Reducer	
				Output shaft [lbs]	Hollow bore [lbs]	Input shaft [lbs]	Motorized Input	Shaft Input
16816	153.3	11.42	42.6	4203	1201	677	**PS122**	**IS122**
19472	138.6	12.63	44.6	4144	1184	667	**PS122**	**IS122**
21242	126.5	13.84	44.39	4159	1188	668	**PS122**	**IS122**
23012	103.0	16.99	39.17	4423	1264	694	**PS122**	**IS122**
24782	82.3	21.25	33.73	4761	1360	721	**PS122**	**IS122**
24782	78.2	22.37	32.04	4883	1395	730	**PS122**	**IS122**
25667	75.1	23.29	31.87	4896	1399	731	**PS122**	**IS122**
26552	66.9	26.15	29.36	5098	1456	744	**PS122**	**IS122**
26552	61.2	28.60	26.85	5327	1522	756	**PS122**	**IS122**
26552	57.4	30.51	25.17	5497	1571	765	**PS122**	**IS122**
26552	53.4	32.76	23.44	5688	1625	773	**PS122**	**IS122**
26552	52.3	33.44	22.96	5744	1641	776	**PS122**	**IS122**
26552	49.7	35.20	21.82	5886	1682	782	**PS122**	**IS122**
26552	42.6	41.07	18.7	6326	1808	797	**PS122**	**IS122**
26552	40.1	43.60	17.61	6503	1858	803	**PS122**	**IS122**
21242	39.2	44.63	13.77	6744	2024	822	**PS122**	**IS122**
21242	35.7	49.04	12.53	6744	2106	828	**PS122**	**IS122**
23012	32.6	53.75	12.38	6744	2141	829	**PS122**	**IS122**
26552	26.5	66.00	11.64	6744	2238	833	**PS122**	**IS122**
23897	27.0	64.84	10.89	6744	2293	838	**PS123**	**IS123**
23897	24.6	71.07	9.93	6744	2384	842	**PS123**	**IS123**
26552	22.3	78.46	10	6744	2412	842	**PS123**	**IS123**
26552	20.1	87.27	8.99	6744	2518	847	**PS123**	**IS123**
26552	16.5	105.91	7.41	6744	2518	855	**PS123**	**IS123**
26552	15.6	112.52	6.97	6744	2518	857	**PS123**	**IS123**
26552	14.2	123.33	6.36	6744	2518	860	**PS123**	**IS123**
26552	13.5	130.04	6.03	6744	2518	862	**PS123**	**IS123**
26552	13.1	133.78	5.86	6744	2518	863	**PS123**	**IS123**
26552	11.6	151.43	5.18	6744	2518	866	**PS123**	**IS123**
26552	9.9	177.53	4.42	6744	2518	870	**PS123**	**IS123**
26552	9.0	194.59	4.03	6744	2518	872	**PS123**	**IS123**
26552	8.1	215.60	3.64	6744	2518	874	**PS123**	**IS123**
26552	7.3	238.93	3.28	6744	2518	875	**PS123**	**IS123**
26552	6.8	255.54	3.07	6744	2518	876	**PS123**	**IS123**
12294	425.0	4.12	86.35	4159	2377	539	**S142**	**IS142**
13702	381.6	4.59	86.41	4117	2353	539	**S142**	**IS142**
15378	340.2	5.14	86.46	4046	2312	538	**S142**	**IS142**
17382	300.7	5.82	86.39	3941	2252	539	**S142**	**IS142**
18579	281.7	6.21	86.48	3863	2207	538	**S142**	**IS142**
16953	239.2	7.32	67	4610	2634	665	**S142**	**IS142**
19017	213.2	8.21	67.01	4505	2574	665	**S142**	**IS142**
21522	188.5	9.29	67.04	4349	2485	665	**S142**	**IS142**
22983	176.5	9.91	67.05	4245	2426	665	**S142**	**IS142**

5.2 IS GEAR REDUCER - fs=1, 1750 rpm

Maximum torque [in-lbs]	Output speed [rpm]	Exact ratio i	Maximum Power [HP]	OHL			Gear Reducer	
				Output shaft [lbs]	Hollow bore [lbs]	Input shaft [lbs]	Motorized Input	Shaft Input
24924	153.4	11.41	63.2	4276	2443	690	**S142**	**IS142**
23189	136.6	12.81	52.34	4986	2849	760	**S142**	**IS142**
21596	122.6	14.27	43.77	5654	3231	816	**S142**	**IS142**
23470	109.3	16.01	42.41	5664	3236	825	**S142**	**IS142**
26551	96.6	18.11	42.41	5477	3130	825	**S142**	**IS142**
28355	90.5	19.33	42.42	5352	3058	824	**S142**	**IS142**
29340	78.7	22.24	38.15	5677	3244	852	**S142**	**IS142**
25630	69.3	25.26	29.34	6915	3952	909	**S142**	**IS142**
28745	61.8	28.33	29.34	6756	3861	909	**S142**	**IS142**
32519	54.6	32.05	29.34	6520	3726	909	**S142**	**IS142**
34721	51.1	34.22	29.34	6364	3637	909	**S142**	**IS142**
39216	44.4	39.38	28.8	6095	3483	913	**S142**	**IS142**
35517	38.2	45.77	22.92	7545	4159	944	**S143**	**IS143**
39561	34.3	50.97	22.92	7266	4152	944	**S143**	**IS143**
41904	30.6	57.17	21.65	7383	4159	944	**S143**	**IS143**
42257	27.1	64.68	19.3	7868	4159	944	**S143**	**IS143**
43158	25.3	69.06	18.46	7868	4159	944	**S143**	**IS143**
37469	22.0	79.45	13.93	7868	4159	944	**S143**	**IS143**
39297	17.7	98.81	11.75	7868	4159	944	**S143**	**IS143**
41895	15.9	110.05	11.24	7868	4159	944	**S143**	**IS143**
42080	14.2	123.44	10.07	7868	4159	944	**S143**	**IS143**
42845	12.5	139.64	9.06	7868	4159	944	**S143**	**IS143**
42356	11.7	149.10	8.39	7868	4159	944	**S143**	**IS143**
33645	11.1	157.49	6.31	7868	4159	944	**S143**	**IS143**
41327	10.2	171.55	7.12	7868	4159	944	**S143**	**IS143**
37473	10.0	175.41	6.31	7868	4159	944	**S143**	**IS143**
42030	8.9	196.74	6.31	7868	4159	944	**S143**	**IS143**
41731	7.9	222.57	5.54	7868	4159	944	**S143**	**IS143**
43205	7.4	237.63	5.37	7868	4159	944	**S143**	**IS143**
42411	6.4	273.41	4.58	7868	4159	944	**S143**	**IS143**
22775	430.9	4.06	162.17	5051	2886	630	**S152**	**IS152**
25411	386.1	4.53	162.13	5011	2864	630	**S152**	**IS152**
25791	336.3	5.20	143.34	5346	3055	704	**S152**	**IS152**
26039	306.4	5.71	131.85	5583	3190	749	**S152**	**IS152**
27216	268.3	6.52	120.67	5832	3332	793	**S152**	**IS152**
28845	240.4	7.28	114.59	5968	3411	817	**S152**	**IS152**
31252	209.4	8.36	108.15	6113	3493	843	**S152**	**IS152**
33199	190.8	9.17	104.67	6182	3532	856	**S152**	**IS152**
37014	168.0	10.42	102.75	6147	3512	864	**S152**	**IS152**
29258	140.4	12.46	67.9	7779	4361	1001	**S152**	**IS152**
32640	125.8	13.91	67.86	7776	4361	1001	**S152**	**IS152**
37477	109.6	15.97	67.88	7722	4361	1001	**S152**	**IS152**
41140	99.8	17.53	67.89	7650	4361	1001	**S152**	**IS152**

5.2 IS GEAR REDUCER - fs=1, 1750 rpm

Maximum torque [in-lbs]	Output speed [rpm]	Exact ratio i	Maximum Power [HP]	OHL			Gear Reducer	
				Output shaft [lbs]	Hollow bore [lbs]	Input shaft [lbs]	Motorized Input	Shaft Input
46729	87.9	19.91	67.89	7498	4285	1001	**S152**	**IS152**
53726	76.5	22.88	67.91	7248	4142	1001	**S152**	**IS152**
53894	64.6	27.11	57.5	8031	4361	1042	**S152**	**IS152**
59164	58.8	29.75	57.52	7831	4361	1042	**S152**	**IS152**
67198	51.8	33.79	57.52	7477	4273	1042	**S152**	**IS152**
68053	45.1	38.84	50.67	8118	4361	1069	**S152**	**IS152**
55595	43.6	40.10	40.95	8992	4361	1111	**S153**	**IS153**
62042	39.1	44.76	40.94	8992	4361	1111	**S153**	**IS153**
69614	34.1	51.38	40.02	8992	4361	1114	**S153**	**IS153**
73053	31.0	56.39	38.26	8992	4361	1121	**S153**	**IS153**
77845	27.3	64.05	35.9	8992	4361	1130	**S153**	**IS153**
68854	23.8	73.63	27.62	8992	4361	1162	**S153**	**IS153**
62889	20.1	87.16	21.31	8992	4361	1169	**S153**	**IS153**
70191	18.0	97.27	21.31	8992	4361	1169	**S153**	**IS153**
80575	15.7	111.67	21.31	8992	4361	1169	**S153**	**IS153**
84402	14.3	122.57	20.34	8992	4361	1169	**S153**	**IS153**
80913	12.6	139.21	17.17	8992	4361	1169	**S153**	**IS153**
63094	11.4	154.02	12.1	8992	4361	1169	**S153**	**IS153**
71552	10.9	160.02	13.21	8992	4361	1169	**S153**	**IS153**
72434	9.9	176.81	12.1	8992	4361	1169	**S153**	**IS153**
79497	9.0	194.06	12.1	8992	4361	1169	**S153**	**IS153**
82782	7.9	220.42	11.09	8992	4361	1169	**S153**	**IS153**
73272	6.9	253.36	8.54	8992	4361	1169	**S153**	**IS153**

5.3 IS GEAR REDUCER - fs=1, 1140 rpm

Maximum torque [in-lbs]	Output speed [rpm]	Exact ratio i	Maximum Power [HP]	OHL			Gear Reducer	
				Output shaft [lbs]	Hollow bore [lbs]	Input shaft [lbs]	Motorized Input	Shaft Input
1505	132.2	8.63	3.29	828	828	161	**PS052**	**IS052**
1682	102.3	11.14	2.84	894	894	182	**PS052**	**IS052**
1770	95.0	12.00	2.78	909	909	185	**PS052**	**IS052**
1859	83.5	13.66	2.56	947	947	195	**PS052**	**IS052**
2124	74.6	15.27	2.62	954	954	193	**PS052**	**IS052**
2124	70.0	16.29	2.46	981	981	200	**PS052**	**IS052**
2124	61.2	18.63	2.15	1040	1040	215	**PS052**	**IS052**
2124	57.8	19.73	2.03	1066	1066	221	**PS052**	**IS052**
2301	54.2	21.04	2.06	1069	1069	219	**PS052**	**IS052**
2301	53.0	21.53	2.01	1080	1080	221	**PS052**	**IS052**
2301	47.4	24.07	1.8	1133	1133	231	**PS052**	**IS052**
2567	45.2	25.20	1.92	1116	1116	226	**PS052**	**IS052**
2567	44.2	25.79	1.88	1128	1128	228	**PS052**	**IS052**
2567	41.0	27.81	1.74	1166	1166	234	**PS052**	**IS052**
2567	38.0	30.00	1.61	1205	1205	240	**PS052**	**IS052**
2655	35.0	32.55	1.54	1235	1235	244	**PS052**	**IS052**
2655	34.5	33.00	1.52	1243	1243	245	**PS052**	**IS052**
2655	33.4	34.09	1.47	1260	1260	247	**PS052**	**IS052**
2921	31.2	36.55	1.51	1259	1259	245	**PS052**	**IS052**
2921	29.4	38.75	1.42	1292	1292	249	**PS052**	**IS052**
3098	28.6	39.90	1.46	1283	1283	247	**PS052**	**IS052**
3098	26.7	42.63	1.37	1321	1321	252	**PS052**	**IS052**
3098	24.8	46.00	1.27	1349	1349	256	**PS052**	**IS052**
3098	24.1	47.20	1.24	1349	1349	258	**PS052**	**IS052**
3098	21.8	52.25	1.12	1349	1349	264	**PS052**	**IS052**
3098	19.7	57.86	1.01	1349	1349	269	**PS052**	**IS052**
3098	19.2	59.42	0.98	1349	1349	270	**PS052**	**IS052**
3098	15.7	72.83	0.8	1349	1349	278	**PS052**	**IS052**
3098	31.2	36.50	1.63	1232	1232	241	**PS053**	**IS053**
3098	24.2	47.14	1.26	1349	1349	258	**PS053**	**IS053**
3098	19.7	57.79	1.03	1349	1349	269	**PS053**	**IS053**
3098	17.9	63.74	0.94	1349	1349	273	**PS053**	**IS053**
3098	15.4	74.20	0.8	1349	1349	279	**PS053**	**IS053**
3098	14.6	78.14	0.76	1349	1349	281	**PS053**	**IS053**
3098	11.9	95.84	0.62	1349	1349	287	**PS053**	**IS053**
3098	9.7	117.48	0.51	1349	1349	293	**PS053**	**IS053**
3098	8.3	137.45	0.43	1349	1349	296	**PS053**	**IS053**
3098	6.4	177.55	0.34	1349	1349	301	**PS053**	**IS053**
3098	5.7	198.45	0.3	1349	1349	302	**PS053**	**IS053**
3098	5.2	217.64	0.27	1349	1349	304	**PS053**	**IS053**
3098	4.5	256.33	0.23	1349	1349	305	**PS053**	**IS053**
3098	3.6	314.21	0.19	1349	1349	307	**PS053**	**IS053**
2921	142.5	8.00	6.88	1290	516	79	**PS062**	**IS062**

5.3 IS GEAR REDUCER - fs=1, 1140 rpm

Maximum torque [in-lbs]	Output speed [rpm]	Exact ratio i	Maximum Power [HP]	OHL			Gear Reducer	
				Output shaft [lbs]	Hollow bore [lbs]	Input shaft [lbs]	Motorized Input	Shaft Input
2921	127.8	8.92	6.17	1355	542	103	**PS062**	**IS062**
3186	119.4	9.55	6.29	1353	541	99	**PS062**	**IS062**
3186	107.1	10.65	5.64	1421	569	122	**PS062**	**IS062**
3452	97.4	11.71	5.55	1440	576	124	**PS062**	**IS062**
3717	87.3	13.06	5.36	1471	588	131	**PS062**	**IS062**
3717	85.3	13.36	5.24	1486	595	135	**PS062**	**IS062**
3983	71.5	15.94	4.71	1569	627	154	**PS062**	**IS062**
3983	70.5	16.16	4.64	1579	632	156	**PS062**	**IS062**
3983	59.1	19.29	3.89	1712	685	182	**PS062**	**IS062**
4071	58.3	19.55	3.92	1709	683	181	**PS062**	**IS062**
4160	49.2	23.18	3.38	1831	732	200	**PS062**	**IS062**
4160	48.0	23.75	3.3	1851	740	203	**PS062**	**IS062**
4248	45.3	25.14	3.18	1885	754	207	**PS062**	**IS062**
4248	41.2	27.66	2.89	1967	787	217	**PS062**	**IS062**
4425	38.0	30.00	2.78	2010	804	221	**PS062**	**IS062**
4779	33.6	33.93	2.65	2066	826	225	**PS062**	**IS062**
5310	31.2	36.57	2.74	2052	821	222	**PS062**	**IS062**
5310	28.9	39.38	2.54	2124	849	229	**PS062**	**IS062**
5310	26.1	43.64	2.29	2226	891	237	**PS062**	**IS062**
5310	24.7	46.10	2.17	2248	899	242	**PS062**	**IS062**
5310	23.6	48.30	2.07	2248	899	245	**PS062**	**IS062**
5310	21.3	53.53	1.87	2248	899	252	**PS062**	**IS062**
5310	20.7	55.00	1.82	2248	899	254	**PS062**	**IS062**
5310	16.9	67.47	1.48	2248	899	265	**PS062**	**IS062**
5310	34.0	33.57	3.04	1971	788	214	**PS063**	**IS063**
5310	30.2	37.77	2.71	2083	833	225	**PS063**	**IS063**
5310	28.5	40.05	2.55	2141	856	230	**PS063**	**IS063**
5310	23.2	49.13	2.08	2248	899	246	**PS063**	**IS063**
5310	20.6	55.29	1.85	2248	899	254	**PS063**	**IS063**
5310	19.4	58.72	1.74	2248	899	258	**PS063**	**IS063**
5310	17.3	65.85	1.55	2248	899	264	**PS063**	**IS063**
5310	16.7	68.25	1.5	2248	899	266	**PS063**	**IS063**
5310	15.5	73.63	1.39	2248	899	270	**PS063**	**IS063**
5310	14.0	81.43	1.25	2248	899	274	**PS063**	**IS063**
5310	11.4	99.89	1.02	2248	899	282	**PS063**	**IS063**
5310	9.0	126.43	0.81	2248	899	289	**PS063**	**IS063**
5310	7.6	150.85	0.68	2248	899	294	**PS063**	**IS063**
5310	6.2	182.53	0.56	2248	899	298	**PS063**	**IS063**
5310	6.2	185.05	0.55	2248	899	298	**PS063**	**IS063**
5310	5.2	217.79	0.47	2248	899	301	**PS063**	**IS063**
5310	4.3	267.16	0.38	2248	899	304	**PS063**	**IS063**
4868	155.3	7.34	12.5	2923	835	284	**PS082**	**IS082**
5310	141.4	8.06	12.41	2991	855	286	**PS082**	**IS082**

5.3 IS GEAR REDUCER - fs=1, 1140 rpm

Maximum torque [in-lbs]	Output speed [rpm]	Exact ratio i	Maximum Power [HP]	OHL			Gear Reducer	
				Output shaft [lbs]	Hollow bore [lbs]	Input shaft [lbs]	Motorized Input	Shaft Input
5753	114.6	9.94	10.9	3200	914	333	**PS082**	**IS082**
6196	98.2	11.61	10.06	3355	959	359	**PS082**	**IS082**
6638	89.4	12.75	9.81	3441	983	367	**PS082**	**IS082**
6727	81.2	14.04	9.02	3563	1018	391	**PS082**	**IS082**
6815	73.9	15.43	8.32	3685	1053	413	**PS082**	**IS082**
6815	72.5	15.73	8.17	3712	1061	418	**PS082**	**IS082**
6815	65.9	17.29	7.42	3849	1100	441	**PS082**	**IS082**
6815	59.9	19.03	6.75	3990	1140	462	**PS082**	**IS082**
6815	56.6	20.14	6.38	4047	1165	474	**PS082**	**IS082**
7081	51.5	22.13	6.03	4047	1200	484	**PS082**	**IS082**
7081	47.5	24.00	5.56	4047	1237	499	**PS082**	**IS082**
7081	43.8	26.05	5.12	4047	1276	513	**PS082**	**IS082**
7966	41.8	27.29	5.5	4047	1277	501	**PS082**	**IS082**
7966	39.8	28.67	5.23	4047	1301	509	**PS082**	**IS082**
7966	38.5	29.60	5.07	4047	1317	514	**PS082**	**IS082**
8851	35.9	31.78	5.25	4047	1332	509	**PS082**	**IS082**
8851	32.7	34.91	4.78	4047	1380	523	**PS082**	**IS082**
8851	32.1	35.50	4.7	4047	1389	526	**PS082**	**IS082**
8851	28.5	40.05	4.16	4047	1454	542	**PS082**	**IS082**
8851	26.5	43.05	3.87	4047	1494	551	**PS082**	**IS082**
8851	22.7	50.25	3.32	4047	1584	568	**PS082**	**IS082**
8851	21.0	54.27	3.07	4047	1619	576	**PS082**	**IS082**
8851	18.4	61.98	2.69	4047	1619	588	**PS082**	**IS082**
8851	16.9	67.52	2.52	4047	1619	595	**PS083**	**IS083**
8851	15.4	74.18	2.3	4047	1619	602	**PS083**	**IS083**
8851	13.9	81.71	2.08	4047	1619	608	**PS083**	**IS083**
8851	12.5	91.49	1.86	4047	1619	615	**PS083**	**IS083**
8851	11.3	100.62	1.69	4047	1619	620	**PS083**	**IS083**
8851	9.7	117.17	1.45	4047	1619	627	**PS083**	**IS083**
8851	8.9	128.73	1.32	4047	1619	631	**PS083**	**IS083**
8851	8.4	136.34	1.25	4047	1619	634	**PS083**	**IS083**
8851	7.2	158.76	1.07	4047	1619	639	**PS083**	**IS083**
8851	6.2	184.88	0.92	4047	1619	644	**PS083**	**IS083**
8851	5.6	203.11	0.84	4047	1619	646	**PS083**	**IS083**
8851	5.5	205.34	0.83	4047	1619	646	**PS083**	**IS083**
8851	5.0	226.04	0.75	4047	1619	649	**PS083**	**IS083**
8851	4.5	250.50	0.68	4047	1619	651	**PS083**	**IS083**
8851	4.3	266.13	0.64	4047	1619	652	**PS083**	**IS083**
8851	3.9	292.36	0.58	4047	1619	654	**PS083**	**IS083**
8851	3.6	315.73	0.54	4047	1619	655	**PS083**	**IS083**
8851	3.2	360.58	0.47	4047	1619	657	**PS083**	**IS083**
7523	141.4	8.06	17.58	3683	1052	145	**PS102**	**IS102**
7966	128.9	8.85	16.96	3784	1081	164	**PS102**	**IS102**

5.3 IS GEAR REDUCER - fs=1, 1140 rpm

Maximum torque [in-lbs]	Output speed [rpm]	Exact ratio i	Maximum Power [HP]	OHL			Gear Reducer	
				Output shaft [lbs]	Hollow bore [lbs]	Input shaft [lbs]	Motorized Input	Shaft Input
8408	104.7	10.88	14.55	4059	1160	236	**PS102**	**IS102**
8851	89.4	12.75	13.08	4278	1222	280	**PS102**	**IS102**
10621	81.5	13.99	14.3	4312	1232	244	**PS102**	**IS102**
11063	73.9	15.43	13.51	4447	1271	267	**PS102**	**IS102**
11506	66.2	17.21	12.59	4609	1317	295	**PS102**	**IS102**
12391	60.0	19.00	12.29	4728	1351	304	**PS102**	**IS102**
12391	54.7	20.83	11.21	4899	1400	336	**PS102**	**IS102**
12391	51.5	22.13	10.55	4946	1433	356	**PS102**	**IS102**
13276	47.0	24.28	10.3	4946	1468	363	**PS102**	**IS102**
13276	43.3	26.33	9.5	4946	1514	387	**PS102**	**IS102**
13276	38.2	29.87	8.37	4946	1589	421	**PS102**	**IS102**
13276	35.2	32.40	7.72	4946	1639	441	**PS102**	**IS102**
12391	32.7	34.91	6.69	4946	1703	472	**PS102**	**IS102**
13276	29.8	38.30	6.53	4946	1747	476	**PS102**	**IS102**
12391	26.8	42.53	5.49	4946	1833	508	**PS102**	**IS102**
11506	25.9	44.00	4.93	4946	1873	524	**PS102**	**IS102**
14161	24.2	47.13	5.66	4946	1871	502	**PS102**	**IS102**
12391	22.7	50.25	4.65	4946	1950	533	**PS102**	**IS102**
11506	20.7	55.14	3.93	4946	2023	554	**PS102**	**IS102**
14161	19.2	59.40	4.49	4946	2023	537	**PS102**	**IS102**
14161	16.8	67.84	3.93	4946	2023	554	**PS102**	**IS102**
14161	15.4	74.18	3.67	4946	2023	564	**PS103**	**IS103**
14161	14.0	81.39	3.35	4946	2023	574	**PS103**	**IS103**
14161	12.7	89.77	3.04	4946	2023	583	**PS103**	**IS103**
14161	11.4	100.15	2.72	4946	2023	592	**PS103**	**IS103**
14161	10.3	110.55	2.46	4946	2023	600	**PS103**	**IS103**
14161	9.4	121.29	2.25	4946	2023	606	**PS103**	**IS103**
14161	8.9	128.73	2.12	4946	2023	610	**PS103**	**IS103**
14161	8.1	141.24	1.93	4946	2023	615	**PS103**	**IS103**
14161	6.6	173.78	1.57	4946	2023	626	**PS103**	**IS103**
14161	6.0	188.51	1.45	4946	2023	630	**PS103**	**IS103**
14161	5.6	203.11	1.34	4946	2023	633	**PS103**	**IS103**
14161	5.1	222.85	1.22	4946	2023	636	**PS103**	**IS103**
14161	5.1	224.76	1.21	4946	2023	636	**PS103**	**IS103**
14161	4.2	274.20	0.99	4946	2023	643	**PS103**	**IS103**
14161	4.1	280.89	0.97	4946	2023	643	**PS103**	**IS103**
14161	3.9	292.36	0.93	4946	2023	645	**PS103**	**IS103**
14161	3.5	320.79	0.85	4946	2023	647	**PS103**	**IS103**
14161	3.3	345.60	0.79	4946	2023	649	**PS103**	**IS103**
14161	2.9	394.69	0.69	4946	2023	652	**PS103**	**IS103**
13276	134.4	8.48	29.49	4802	1372	663	**PS122**	**IS122**
15046	122.6	9.30	30.49	4818	1377	656	**PS122**	**IS122**
15046	111.3	10.24	27.69	5021	1435	677	**PS122**	**IS122**

5.3 IS GEAR REDUCER - fs=1, 1140 rpm

Maximum torque [in-lbs]	Output speed [rpm]	Exact ratio i	Maximum Power [HP]	OHL			Gear Reducer	
				Output shaft [lbs]	Hollow bore [lbs]	Input shaft [lbs]	Motorized Input	Shaft Input
16816	99.9	11.42	27.75	5087	1454	677	**PS122**	**IS122**
19472	90.3	12.63	29.06	5058	1445	667	**PS122**	**IS122**
21242	82.4	13.84	28.92	5101	1457	668	**PS122**	**IS122**
23012	67.1	16.99	25.51	5432	1552	694	**PS122**	**IS122**
24782	53.6	21.25	21.97	5847	1671	721	**PS122**	**IS122**
24782	51.0	22.37	20.87	5987	1711	730	**PS122**	**IS122**
25667	48.9	23.29	20.76	6015	1718	731	**PS122**	**IS122**
26552	43.6	26.15	19.13	6260	1789	744	**PS122**	**IS122**
26552	39.9	28.60	17.49	6524	1864	756	**PS122**	**IS122**
26552	37.4	30.51	16.39	6720	1920	765	**PS122**	**IS122**
26552	34.8	32.76	15.27	6744	1983	773	**PS122**	**IS122**
26552	34.1	33.44	14.96	6744	2002	776	**PS122**	**IS122**
26552	32.4	35.20	14.21	6744	2048	782	**PS122**	**IS122**
26552	27.8	41.07	12.18	6744	2193	797	**PS122**	**IS122**
26552	26.1	43.60	11.47	6744	2251	803	**PS122**	**IS122**
21242	25.5	44.63	8.97	6744	2420	822	**PS122**	**IS122**
21242	23.2	49.04	8.16	6744	2515	828	**PS122**	**IS122**
23012	21.2	53.75	8.07	6744	2518	829	**PS122**	**IS122**
26552	17.3	66.00	7.58	6744	2518	833	**PS122**	**IS122**
23897	17.6	64.84	7.09	6744	2518	838	**PS123**	**IS123**
23897	16.0	71.07	6.47	6744	2518	842	**PS123**	**IS123**
26552	14.5	78.46	6.51	6744	2518	842	**PS123**	**IS123**
26552	13.1	87.27	5.85	6744	2518	847	**PS123**	**IS123**
26552	10.8	105.91	4.82	6744	2518	855	**PS123**	**IS123**
26552	10.1	112.52	4.54	6744	2518	857	**PS123**	**IS123**
26552	9.2	123.33	4.14	6744	2518	860	**PS123**	**IS123**
26552	8.8	130.04	3.93	6744	2518	862	**PS123**	**IS123**
26552	8.5	133.78	3.82	6744	2518	863	**PS123**	**IS123**
26552	7.5	151.43	3.37	6744	2518	866	**PS123**	**IS123**
26552	6.4	177.53	2.88	6744	2518	870	**PS123**	**IS123**
26552	5.9	194.59	2.63	6744	2518	872	**PS123**	**IS123**
26552	5.3	215.60	2.37	6744	2518	874	**PS123**	**IS123**
26552	4.8	238.93	2.14	6744	2518	875	**PS123**	**IS123**
26552	4.5	255.54	2	6744	2518	876	**PS123**	**IS123**
12294	276.9	4.12	56.25	5165	2952	539	**S142**	**IS142**
13702	248.6	4.59	56.29	5159	2948	539	**S142**	**IS142**
15378	221.6	5.14	56.32	5129	2931	538	**S142**	**IS142**
17382	195.9	5.82	56.28	5068	2896	539	**S142**	**IS142**
18579	183.5	6.21	56.34	5015	2866	538	**S142**	**IS142**
16953	155.8	7.32	43.65	5826	3329	665	**S142**	**IS142**
19017	138.9	8.21	43.65	5768	3296	665	**S142**	**IS142**
21522	122.8	9.29	43.67	5665	3237	665	**S142**	**IS142**
22983	115.0	9.91	43.68	5590	3194	665	**S142**	**IS142**

5.3 IS GEAR REDUCER - fs=1, 1140 rpm

Maximum torque [in-lbs]	Output speed [rpm]	Exact ratio i	Maximum Power [HP]	OHL			Gear Reducer	
				Output shaft [lbs]	Hollow bore [lbs]	Input shaft [lbs]	Motorized Input	Shaft Input
24924	100.0	11.41	41.17	5684	3248	690	**S142**	**IS142**
23189	89.0	12.81	34.1	6449	3685	760	**S142**	**IS142**
21596	79.9	14.27	28.51	7170	4097	816	**S142**	**IS142**
23470	71.2	16.01	27.63	7238	4136	825	**S142**	**IS142**
26551	63.0	18.11	27.62	7117	4067	825	**S142**	**IS142**
28355	59.0	19.33	27.63	7028	4016	824	**S142**	**IS142**
29340	51.2	22.24	24.85	7432	4159	852	**S142**	**IS142**
25630	45.1	25.26	19.12	7868	4159	909	**S142**	**IS142**
28745	40.2	28.33	19.11	7868	4159	909	**S142**	**IS142**
32519	35.6	32.05	19.11	7868	4159	909	**S142**	**IS142**
34721	33.3	34.22	19.11	7868	4159	909	**S142**	**IS142**
39216	28.9	39.38	18.76	7868	4159	913	**S142**	**IS142**
35517	24.9	45.77	14.93	7868	4159	944	**S143**	**IS143**
39561	22.4	50.97	14.93	7868	4159	944	**S143**	**IS143**
41904	19.9	57.17	14.1	7868	4159	944	**S143**	**IS143**
42257	17.6	64.68	12.57	7868	4159	944	**S143**	**IS143**
43158	16.5	69.06	12.03	7868	4159	944	**S143**	**IS143**
37469	14.3	79.45	9.07	7868	4159	944	**S143**	**IS143**
39297	11.5	98.81	7.65	7868	4159	944	**S143**	**IS143**
41895	10.4	110.05	7.32	7868	4159	944	**S143**	**IS143**
42080	9.2	123.44	6.56	7868	4159	944	**S143**	**IS143**
42845	8.2	139.64	5.9	7868	4159	944	**S143**	**IS143**
42356	7.7	149.10	5.47	7868	4159	944	**S143**	**IS143**
33645	7.2	157.49	4.11	7868	4159	944	**S143**	**IS143**
41327	6.7	171.55	4.64	7868	4159	944	**S143**	**IS143**
37473	6.5	175.41	4.11	7868	4159	944	**S143**	**IS143**
42030	5.8	196.74	4.11	7868	4159	944	**S143**	**IS143**
41731	5.1	222.57	3.61	7868	4159	944	**S143**	**IS143**
43205	4.8	237.63	3.5	7868	4159	944	**S143**	**IS143**
42411	4.2	273.41	2.98	7868	4159	944	**S143**	**IS143**
22775	280.7	4.06	105.64	6253	3573	630	**S152**	**IS152**
25411	251.5	4.53	105.62	6258	3576	630	**S152**	**IS152**
25791	219.1	5.20	93.38	6650	3800	704	**S152**	**IS152**
26039	199.6	5.71	85.89	6928	3959	749	**S152**	**IS152**
27216	174.8	6.52	78.61	7237	4135	793	**S152**	**IS152**
28845	156.6	7.28	74.65	7426	4243	817	**S152**	**IS152**
31252	136.4	8.36	70.45	7638	4361	843	**S152**	**IS152**
33199	124.3	9.17	68.19	7754	4361	856	**S152**	**IS152**
37014	109.4	10.42	66.93	7787	4361	864	**S152**	**IS152**
29258	91.5	12.46	44.23	8992	4361	1001	**S152**	**IS152**
32640	82.0	13.91	44.21	8992	4361	1001	**S152**	**IS152**
37477	71.4	15.97	44.22	8992	4361	1001	**S152**	**IS152**
41140	65.0	17.53	44.22	8992	4361	1001	**S152**	**IS152**

5.3 IS GEAR REDUCER - fs=1, 1140 rpm

Maximum torque [in-lbs]	Output speed [rpm]	Exact ratio i	Maximum Power [HP]	OHL			Gear Reducer	
				Output shaft [lbs]	Hollow bore [lbs]	Input shaft [lbs]	Motorized Input	Shaft Input
46729	57.3	19.91	44.23	8992	4361	1001	**S152**	**IS152**
53726	49.8	22.88	44.24	8992	4361	1001	**S152**	**IS152**
53894	42.1	27.11	37.46	8992	4361	1042	**S152**	**IS152**
59164	38.3	29.75	37.47	8992	4361	1042	**S152**	**IS152**
67198	33.7	33.79	37.47	8992	4361	1042	**S152**	**IS152**
68053	29.4	38.84	33.01	8992	4361	1069	**S152**	**IS152**
55595	28.4	40.10	26.67	8992	4361	1111	**S153**	**IS153**
62042	25.5	44.76	26.67	8992	4361	1111	**S153**	**IS153**
69614	22.2	51.38	26.07	8992	4361	1114	**S153**	**IS153**
73053	20.2	56.39	24.92	8992	4361	1121	**S153**	**IS153**
77845	17.8	64.05	23.38	8992	4361	1130	**S153**	**IS153**
68854	15.5	73.63	17.99	8992	4361	1162	**S153**	**IS153**
62889	13.1	87.16	13.88	8992	4361	1169	**S153**	**IS153**
70191	11.7	97.27	13.88	8992	4361	1169	**S153**	**IS153**
80575	10.2	111.67	13.88	8992	4361	1169	**S153**	**IS153**
84402	9.3	122.57	13.25	8992	4361	1169	**S153**	**IS153**
80913	8.2	139.21	11.18	8992	4361	1169	**S153**	**IS153**
63094	7.4	154.02	7.88	8992	4361	1169	**S153**	**IS153**
71552	7.1	160.02	8.6	8992	4361	1169	**S153**	**IS153**
72434	6.5	176.81	7.88	8992	4361	1169	**S153**	**IS153**
79497	5.9	194.06	7.88	8992	4361	1169	**S153**	**IS153**
82782	5.2	220.42	7.23	8992	4361	1169	**S153**	**IS153**
73272	4.5	253.36	5.56	8992	4361	1169	**S153**	**IS153**

5.4 IS GEAR REDUCER - fs=1, 875 rpm

Maximum torque [in-lbs]	Output speed [rpm]	Exact ratio i	Maximum Power [HP]	OHL			Gear Reducer	
				Output shaft [lbs]	Hollow bore [lbs]	Input shaft [lbs]	Motorized Input	Shaft Input
1505	101.5	8.63	2.5	923	923	161	**PS052**	**IS052**
1682	78.5	11.14	2.16	998	998	182	**PS052**	**IS052**
1770	72.9	12.00	2.11	1016	1016	185	**PS052**	**IS052**
1859	64.1	13.66	1.95	1059	1059	195	**PS052**	**IS052**
2124	57.3	15.27	1.99	1070	1070	193	**PS052**	**IS052**
2124	53.7	16.29	1.87	1099	1099	200	**PS052**	**IS052**
2124	47.0	18.63	1.63	1163	1163	215	**PS052**	**IS052**
2124	44.4	19.73	1.54	1192	1192	221	**PS052**	**IS052**
2301	41.6	21.04	1.57	1198	1198	219	**PS052**	**IS052**
2301	40.6	21.53	1.53	1209	1209	221	**PS052**	**IS052**
2301	36.4	24.07	1.37	1267	1267	231	**PS052**	**IS052**
2567	34.7	25.20	1.46	1253	1253	226	**PS052**	**IS052**
2567	33.9	25.79	1.43	1265	1265	228	**PS052**	**IS052**
2567	31.5	27.81	1.32	1307	1307	234	**PS052**	**IS052**
2567	29.2	30.00	1.22	1349	1349	240	**PS052**	**IS052**
2655	26.9	32.55	1.17	1349	1349	244	**PS052**	**IS052**
2655	26.5	33.00	1.15	1349	1349	245	**PS052**	**IS052**
2655	25.7	34.09	1.12	1349	1349	247	**PS052**	**IS052**
2921	23.9	36.55	1.14	1349	1349	245	**PS052**	**IS052**
2921	22.6	38.75	1.08	1349	1349	249	**PS052**	**IS052**
3098	21.9	39.90	1.11	1349	1349	247	**PS052**	**IS052**
3098	20.5	42.63	1.04	1349	1349	252	**PS052**	**IS052**
3098	19.0	46.00	0.96	1349	1349	256	**PS052**	**IS052**
3098	18.5	47.20	0.94	1349	1349	258	**PS052**	**IS052**
3098	16.8	52.25	0.85	1349	1349	264	**PS052**	**IS052**
3098	15.1	57.86	0.77	1349	1349	269	**PS052**	**IS052**
3098	14.7	59.42	0.75	1349	1349	270	**PS052**	**IS052**
3098	12.0	72.83	0.61	1349	1349	278	**PS052**	**IS052**
3098	24.0	36.50	1.24	1349	1349	241	**PS053**	**IS053**
3098	18.6	47.14	0.96	1349	1349	258	**PS053**	**IS053**
3098	15.1	57.79	0.78	1349	1349	269	**PS053**	**IS053**
3098	13.7	63.74	0.71	1349	1349	273	**PS053**	**IS053**
3098	11.8	74.20	0.61	1349	1349	279	**PS053**	**IS053**
3098	11.2	78.14	0.58	1349	1349	281	**PS053**	**IS053**
3098	9.1	95.84	0.47	1349	1349	287	**PS053**	**IS053**
3098	7.5	117.48	0.39	1349	1349	293	**PS053**	**IS053**
3098	6.4	137.45	0.33	1349	1349	296	**PS053**	**IS053**
3098	4.9	177.55	0.26	1349	1349	301	**PS053**	**IS053**
3098	4.4	198.45	0.23	1349	1349	302	**PS053**	**IS053**
3098	4.0	217.64	0.21	1349	1349	304	**PS053**	**IS053**
3098	3.4	256.33	0.18	1349	1349	305	**PS053**	**IS053**
3098	2.8	314.21	0.14	1349	1349	307	**PS053**	**IS053**
2921	109.4	8.00	5.23	1451	580	79	**PS062**	**IS062**

5.4 IS GEAR REDUCER - fs=1, 875 rpm

Maximum torque [in-lbs]	Output speed [rpm]	Exact ratio i	Maximum Power [HP]	OHL			Gear Reducer	
				Output shaft [lbs]	Hollow bore [lbs]	Input shaft [lbs]	Motorized Input	Shaft Input
2921	98.1	8.92	4.69	1521	608	103	**PS062**	**IS062**
3186	91.7	9.55	4.78	1523	609	99	**PS062**	**IS062**
3186	82.2	10.65	4.29	1598	639	122	**PS062**	**IS062**
3452	74.7	11.71	4.22	1623	649	124	**PS062**	**IS062**
3717	67.0	13.06	4.08	1660	664	131	**PS062**	**IS062**
3717	65.5	13.36	3.98	1677	671	135	**PS062**	**IS062**
3983	54.9	15.94	3.58	1770	708	154	**PS062**	**IS062**
3983	54.1	16.16	3.53	1782	713	156	**PS062**	**IS062**
3983	45.4	19.29	2.96	1927	771	182	**PS062**	**IS062**
4071	44.8	19.55	2.98	1924	770	181	**PS062**	**IS062**
4160	37.8	23.18	2.57	2059	824	200	**PS062**	**IS062**
4160	36.8	23.75	2.51	2081	832	203	**PS062**	**IS062**
4248	34.8	25.14	2.42	2119	848	207	**PS062**	**IS062**
4248	31.6	27.66	2.2	2209	883	217	**PS062**	**IS062**
4425	29.2	30.00	2.11	2248	899	221	**PS062**	**IS062**
4779	25.8	33.93	2.02	2248	899	225	**PS062**	**IS062**
5310	23.9	36.57	2.08	2248	899	222	**PS062**	**IS062**
5310	22.2	39.38	1.93	2248	899	229	**PS062**	**IS062**
5310	20.1	43.64	1.74	2248	899	237	**PS062**	**IS062**
5310	19.0	46.10	1.65	2248	899	242	**PS062**	**IS062**
5310	18.1	48.30	1.57	2248	899	245	**PS062**	**IS062**
5310	16.4	53.53	1.42	2248	899	252	**PS062**	**IS062**
5310	15.9	55.00	1.38	2248	899	254	**PS062**	**IS062**
5310	13.0	67.47	1.13	2248	899	265	**PS062**	**IS062**
5310	26.1	33.57	2.31	2229	891	214	**PS063**	**IS063**
5310	23.2	37.77	2.06	2248	899	225	**PS063**	**IS063**
5310	21.9	40.05	1.94	2248	899	230	**PS063**	**IS063**
5310	17.8	49.13	1.58	2248	899	246	**PS063**	**IS063**
5310	15.8	55.29	1.4	2248	899	254	**PS063**	**IS063**
5310	14.9	58.72	1.32	2248	899	258	**PS063**	**IS063**
5310	13.3	65.85	1.18	2248	899	264	**PS063**	**IS063**
5310	12.8	68.25	1.14	2248	899	266	**PS063**	**IS063**
5310	11.9	73.63	1.05	2248	899	270	**PS063**	**IS063**
5310	10.8	81.43	0.95	2248	899	274	**PS063**	**IS063**
5310	8.8	99.89	0.78	2248	899	282	**PS063**	**IS063**
5310	6.9	126.43	0.61	2248	899	289	**PS063**	**IS063**
5310	5.8	150.85	0.51	2248	899	294	**PS063**	**IS063**
5310	4.8	182.53	0.43	2248	899	298	**PS063**	**IS063**
5310	4.7	185.05	0.42	2248	899	298	**PS063**	**IS063**
5310	4.0	217.79	0.36	2248	899	301	**PS063**	**IS063**
5310	3.3	267.16	0.29	2248	899	304	**PS063**	**IS063**
4868	119.2	7.34	9.5	3226	922	284	**PS082**	**IS082**
5310	108.5	8.06	9.43	3304	944	286	**PS082**	**IS082**

5.4 IS GEAR REDUCER - fs=1, 875 rpm

Maximum torque [in-lbs]	Output speed [rpm]	Exact ratio i	Maximum Power [HP]	OHL			Gear Reducer	
				Output shaft [lbs]	Hollow bore [lbs]	Input shaft [lbs]	Motorized Input	Shaft Input
5753	88.0	9.94	8.28	3536	1010	333	**PS082**	**IS082**
6196	75.4	11.61	7.64	3709	1060	359	**PS082**	**IS082**
6638	68.6	12.75	7.45	3805	1087	367	**PS082**	**IS082**
6727	62.3	14.04	6.86	3939	1125	391	**PS082**	**IS082**
6815	56.7	15.43	6.32	4047	1164	413	**PS082**	**IS082**
6815	55.6	15.73	6.21	4047	1172	418	**PS082**	**IS082**
6815	50.6	17.29	5.64	4047	1215	441	**PS082**	**IS082**
6815	46.0	19.03	5.13	4047	1259	462	**PS082**	**IS082**
6815	43.5	20.14	4.84	4047	1286	474	**PS082**	**IS082**
7081	39.5	22.13	4.58	4047	1325	484	**PS082**	**IS082**
7081	36.5	24.00	4.22	4047	1366	499	**PS082**	**IS082**
7081	33.6	26.05	3.89	4047	1408	513	**PS082**	**IS082**
7966	32.1	27.29	4.18	4047	1411	501	**PS082**	**IS082**
7966	30.5	28.67	3.98	4047	1437	509	**PS082**	**IS082**
7966	29.6	29.60	3.85	4047	1455	514	**PS082**	**IS082**
8851	27.5	31.78	3.99	4047	1472	509	**PS082**	**IS082**
8851	25.1	34.91	3.63	4047	1525	523	**PS082**	**IS082**
8851	24.6	35.50	3.57	4047	1535	526	**PS082**	**IS082**
8851	21.9	40.05	3.16	4047	1606	542	**PS082**	**IS082**
8851	20.3	43.05	2.94	4047	1619	551	**PS082**	**IS082**
8851	17.4	50.25	2.52	4047	1619	568	**PS082**	**IS082**
8851	16.1	54.27	2.34	4047	1619	576	**PS082**	**IS082**
8851	14.1	61.98	2.04	4047	1619	588	**PS082**	**IS082**
8851	13.0	67.52	1.92	4047	1619	595	**PS083**	**IS083**
8851	11.8	74.18	1.74	4047	1619	602	**PS083**	**IS083**
8851	10.7	81.71	1.58	4047	1619	608	**PS083**	**IS083**
8851	9.6	91.49	1.41	4047	1619	615	**PS083**	**IS083**
8851	8.7	100.62	1.29	4047	1619	620	**PS083**	**IS083**
8851	7.5	117.17	1.1	4047	1619	627	**PS083**	**IS083**
8851	6.8	128.73	1.01	4047	1619	631	**PS083**	**IS083**
8851	6.4	136.34	0.95	4047	1619	634	**PS083**	**IS083**
8851	5.5	158.76	0.82	4047	1619	639	**PS083**	**IS083**
8851	4.7	184.88	0.7	4047	1619	644	**PS083**	**IS083**
8851	4.3	203.11	0.64	4047	1619	646	**PS083**	**IS083**
8851	4.3	205.34	0.63	4047	1619	646	**PS083**	**IS083**
8851	3.9	226.04	0.57	4047	1619	649	**PS083**	**IS083**
8851	3.5	250.50	0.52	4047	1619	651	**PS083**	**IS083**
8851	3.3	266.13	0.49	4047	1619	652	**PS083**	**IS083**
8851	3.0	292.36	0.44	4047	1619	654	**PS083**	**IS083**
8851	2.8	315.73	0.41	4047	1619	655	**PS083**	**IS083**
8851	2.4	360.58	0.36	4047	1619	657	**PS083**	**IS083**
7523	108.5	8.06	13.36	4064	1161	145	**PS102**	**IS102**
7966	98.9	8.85	12.89	4177	1193	164	**PS102**	**IS102**

5.4 IS GEAR REDUCER - fs=1, 875 rpm

Maximum torque [in-lbs]	Output speed [rpm]	Exact ratio i	Maximum Power [HP]	OHL			Gear Reducer	
				Output shaft [lbs]	Hollow bore [lbs]	Input shaft [lbs]	Motorized Input	Shaft Input
8408	80.4	10.88	11.06	4480	1280	236	**PS102**	**IS102**
8851	68.6	12.75	9.94	4721	1349	280	**PS102**	**IS102**
10621	62.5	13.99	10.87	4769	1363	244	**PS102**	**IS102**
11063	56.7	15.43	10.27	4920	1406	267	**PS102**	**IS102**
11506	50.8	17.21	9.57	4946	1457	295	**PS102**	**IS102**
12391	46.0	19.00	9.34	4946	1495	304	**PS102**	**IS102**
12391	42.0	20.83	8.52	4946	1549	336	**PS102**	**IS102**
12391	39.5	22.13	8.02	4946	1585	356	**PS102**	**IS102**
13276	36.0	24.28	7.83	4946	1624	363	**PS102**	**IS102**
13276	33.2	26.33	7.22	4946	1675	387	**PS102**	**IS102**
13276	29.3	29.87	6.36	4946	1757	421	**PS102**	**IS102**
13276	27.0	32.40	5.87	4946	1812	441	**PS102**	**IS102**
12391	25.1	34.91	5.08	4946	1880	472	**PS102**	**IS102**
13276	22.8	38.30	4.96	4946	1929	476	**PS102**	**IS102**
12391	20.6	42.53	4.17	4946	2022	508	**PS102**	**IS102**
11506	19.9	44.00	3.74	4946	2023	524	**PS102**	**IS102**
14161	18.6	47.13	4.3	4946	2023	502	**PS102**	**IS102**
12391	17.4	50.25	3.53	4946	2023	533	**PS102**	**IS102**
11506	15.9	55.14	2.99	4946	2023	554	**PS102**	**IS102**
14161	14.7	59.40	3.41	4946	2023	537	**PS102**	**IS102**
14161	12.9	67.84	2.99	4946	2023	554	**PS102**	**IS102**
14161	11.8	74.18	2.79	4946	2023	564	**PS103**	**IS103**
14161	10.8	81.39	2.54	4946	2023	574	**PS103**	**IS103**
14161	9.8	89.77	2.31	4946	2023	583	**PS103**	**IS103**
14161	8.7	100.15	2.07	4946	2023	592	**PS103**	**IS103**
14161	7.9	110.55	1.87	4946	2023	600	**PS103**	**IS103**
14161	7.2	121.29	1.71	4946	2023	606	**PS103**	**IS103**
14161	6.8	128.73	1.61	4946	2023	610	**PS103**	**IS103**
14161	6.2	141.24	1.47	4946	2023	615	**PS103**	**IS103**
14161	5.0	173.78	1.19	4946	2023	626	**PS103**	**IS103**
14161	4.6	188.51	1.1	4946	2023	630	**PS103**	**IS103**
14161	4.3	203.11	1.02	4946	2023	633	**PS103**	**IS103**
14161	3.9	222.85	0.93	4946	2023	636	**PS103**	**IS103**
14161	3.9	224.76	0.92	4946	2023	636	**PS103**	**IS103**
14161	3.2	274.20	0.76	4946	2023	643	**PS103**	**IS103**
14161	3.1	280.89	0.74	4946	2023	643	**PS103**	**IS103**
14161	3.0	292.36	0.71	4946	2023	645	**PS103**	**IS103**
14161	2.7	320.79	0.65	4946	2023	647	**PS103**	**IS103**
14161	2.5	345.60	0.6	4946	2023	649	**PS103**	**IS103**
14161	2.2	394.69	0.52	4946	2023	652	**PS103**	**IS103**
13276	103.2	8.48	22.41	5356	1530	663	**PS122**	**IS122**
15046	94.1	9.30	23.17	5390	1540	656	**PS122**	**IS122**
15046	85.5	10.24	21.04	5611	1603	677	**PS122**	**IS122**

5.4 IS GEAR REDUCER - fs=1, 875 rpm

Maximum torque [in-lbs]	Output speed [rpm]	Exact ratio i	Maximum Power [HP]	OHL			Gear Reducer	
				Output shaft [lbs]	Hollow bore [lbs]	Input shaft [lbs]	Motorized Input	Shaft Input
16816	76.7	11.42	21.09	5699	1628	677	**PS122**	**IS122**
19472	69.3	12.63	22.08	5691	1626	667	**PS122**	**IS122**
21242	63.2	13.84	21.98	5753	1644	668	**PS122**	**IS122**
23012	51.5	16.99	19.39	6129	1751	694	**PS122**	**IS122**
24782	41.2	21.25	16.7	6598	1885	721	**PS122**	**IS122**
24782	39.1	22.37	15.86	6744	1929	730	**PS122**	**IS122**
25667	37.6	23.29	15.78	6744	1940	731	**PS122**	**IS122**
26552	33.5	26.15	14.54	6744	2018	744	**PS122**	**IS122**
26552	30.6	28.60	13.29	6744	2101	756	**PS122**	**IS122**
26552	28.7	30.51	12.46	6744	2162	765	**PS122**	**IS122**
26552	26.7	32.76	11.61	6744	2230	773	**PS122**	**IS122**
26552	26.2	33.44	11.37	6744	2251	776	**PS122**	**IS122**
26552	24.9	35.20	10.8	6744	2301	782	**PS122**	**IS122**
26552	21.3	41.07	9.26	6744	2460	797	**PS122**	**IS122**
26552	20.1	43.60	8.72	6744	2518	803	**PS122**	**IS122**
21242	19.6	44.63	6.81	6744	2518	822	**PS122**	**IS122**
21242	17.8	49.04	6.2	6744	2518	828	**PS122**	**IS122**
23012	16.3	53.75	6.13	6744	2518	829	**PS122**	**IS122**
26552	13.3	66.00	5.76	6744	2518	833	**PS122**	**IS122**
23897	13.5	64.84	5.39	6744	2518	838	**PS123**	**IS123**
23897	12.3	71.07	4.92	6744	2518	842	**PS123**	**IS123**
26552	11.2	78.46	4.95	6744	2518	842	**PS123**	**IS123**
26552	10.0	87.27	4.45	6744	2518	847	**PS123**	**IS123**
26552	8.3	105.91	3.67	6744	2518	855	**PS123**	**IS123**
26552	7.8	112.52	3.45	6744	2518	857	**PS123**	**IS123**
26552	7.1	123.33	3.15	6744	2518	860	**PS123**	**IS123**
26552	6.7	130.04	2.99	6744	2518	862	**PS123**	**IS123**
26552	6.5	133.78	2.9	6744	2518	863	**PS123**	**IS123**
26552	5.8	151.43	2.56	6744	2518	866	**PS123**	**IS123**
26552	4.9	177.53	2.19	6744	2518	870	**PS123**	**IS123**
26552	4.5	194.59	2	6744	2518	872	**PS123**	**IS123**
26552	4.1	215.60	1.8	6744	2518	874	**PS123**	**IS123**
26552	3.7	238.93	1.62	6744	2518	875	**PS123**	**IS123**
26552	3.4	255.54	1.52	6744	2518	876	**PS123**	**IS123**
12294	212.5	4.12	42.75	5861	3349	539	**S142**	**IS142**
13702	190.8	4.59	42.78	5880	3360	539	**S142**	**IS142**
15378	170.1	5.14	42.8	5878	3359	538	**S142**	**IS142**
17382	150.4	5.82	42.77	5848	3342	539	**S142**	**IS142**
18579	140.8	6.21	42.81	5812	3321	538	**S142**	**IS142**
16953	119.6	7.32	33.17	6667	3810	665	**S142**	**IS142**
19017	106.6	8.21	33.17	6642	3796	665	**S142**	**IS142**
21522	94.2	9.29	33.19	6575	3757	665	**S142**	**IS142**
22983	88.3	9.91	33.19	6520	3726	665	**S142**	**IS142**

5.4 IS GEAR REDUCER - fs=1, 875 rpm

Maximum torque [in-lbs]	Output speed [rpm]	Exact ratio i	Maximum Power [HP]	OHL			Gear Reducer	
				Output shaft [lbs]	Hollow bore [lbs]	Input shaft [lbs]	Motorized Input	Shaft Input
24924	76.7	11.41	31.29	6658	3805	690	**S142**	**IS142**
23189	68.3	12.81	25.91	7461	4159	760	**S142**	**IS142**
21596	61.3	14.27	21.67	7868	4159	816	**S142**	**IS142**
23470	54.7	16.01	20.99	7868	4159	825	**S142**	**IS142**
26551	48.3	18.11	20.99	7868	4159	825	**S142**	**IS142**
28355	45.3	19.33	21	7868	4159	824	**S142**	**IS142**
29340	39.3	22.24	18.88	7868	4159	852	**S142**	**IS142**
25630	34.6	25.26	14.53	7868	4159	909	**S142**	**IS142**
28745	30.9	28.33	14.53	7868	4159	909	**S142**	**IS142**
32519	27.3	32.05	14.53	7868	4159	909	**S142**	**IS142**
34721	25.6	34.22	14.53	7868	4159	909	**S142**	**IS142**
39216	22.2	39.38	14.26	7868	4159	913	**S142**	**IS142**
35517	19.1	45.77	11.35	7868	4159	944	**S143**	**IS143**
39561	17.2	50.97	11.35	7868	4159	944	**S143**	**IS143**
41904	15.3	57.17	10.72	7868	4159	944	**S143**	**IS143**
42257	13.5	64.68	9.55	7868	4159	944	**S143**	**IS143**
43158	12.7	69.06	9.14	7868	4159	944	**S143**	**IS143**
37469	11.0	79.45	6.9	7868	4159	944	**S143**	**IS143**
39297	8.9	98.81	5.82	7868	4159	944	**S143**	**IS143**
41895	8.0	110.05	5.57	7868	4159	944	**S143**	**IS143**
42080	7.1	123.44	4.98	7868	4159	944	**S143**	**IS143**
42845	6.3	139.64	4.49	7868	4159	944	**S143**	**IS143**
42356	5.9	149.10	4.15	7868	4159	944	**S143**	**IS143**
33645	5.6	157.49	3.12	7868	4159	944	**S143**	**IS143**
41327	5.1	171.55	3.52	7868	4159	944	**S143**	**IS143**
37473	5.0	175.41	3.12	7868	4159	944	**S143**	**IS143**
42030	4.5	196.74	3.12	7868	4159	944	**S143**	**IS143**
41731	3.9	222.57	2.74	7868	4159	944	**S143**	**IS143**
43205	3.7	237.63	2.66	7868	4159	944	**S143**	**IS143**
42411	3.2	273.41	2.27	7868	4159	944	**S143**	**IS143**
22775	215.4	4.06	80.28	7084	4048	630	**S152**	**IS152**
25411	193.0	4.53	80.26	7120	4069	630	**S152**	**IS152**
25791	168.1	5.20	70.96	7553	4316	704	**S152**	**IS152**
26039	153.2	5.71	65.27	7858	4361	749	**S152**	**IS152**
27216	134.1	6.52	59.74	8209	4361	793	**S152**	**IS152**
28845	120.2	7.28	56.73	8434	4361	817	**S152**	**IS152**
31252	104.7	8.36	53.54	8693	4361	843	**S152**	**IS152**
33199	95.4	9.17	51.82	8842	4361	856	**S152**	**IS152**
37014	84.0	10.42	50.86	8922	4361	864	**S152**	**IS152**
29258	70.2	12.46	33.61	8992	4361	1001	**S152**	**IS152**
32640	62.9	13.91	33.6	8992	4361	1001	**S152**	**IS152**
37477	54.8	15.97	33.6	8992	4361	1001	**S152**	**IS152**
41140	49.9	17.53	33.61	8992	4361	1001	**S152**	**IS152**

5.4 IS GEAR REDUCER - fs=1, 875 rpm

Maximum torque [in-lbs]	Output speed [rpm]	Exact ratio i	Maximum Power [HP]	OHL			Gear Reducer	
				Output shaft [lbs]	Hollow bore [lbs]	Input shaft [lbs]	Motorized Input	Shaft Input
46729	44.0	19.91	33.61	8992	4361	1001	**S152**	**IS152**
53726	38.2	22.88	33.62	8992	4361	1001	**S152**	**IS152**
53894	32.3	27.11	28.47	8992	4361	1042	**S152**	**IS152**
59164	29.4	29.75	28.47	8992	4361	1042	**S152**	**IS152**
67198	25.9	33.79	28.47	8992	4361	1042	**S152**	**IS152**
68053	22.5	38.84	25.09	8992	4361	1069	**S152**	**IS152**
55595	21.8	40.10	20.27	8992	4361	1111	**S153**	**IS153**
62042	19.6	44.76	20.27	8992	4361	1111	**S153**	**IS153**
69614	17.0	51.38	19.81	8992	4361	1114	**S153**	**IS153**
73053	15.5	56.39	18.94	8992	4361	1121	**S153**	**IS153**
77845	13.7	64.05	17.77	8992	4361	1130	**S153**	**IS153**
68854	11.9	73.63	13.67	8992	4361	1162	**S153**	**IS153**
62889	10.0	87.16	10.55	8992	4361	1169	**S153**	**IS153**
70191	9.0	97.27	10.55	8992	4361	1169	**S153**	**IS153**
80575	7.8	111.67	10.55	8992	4361	1169	**S153**	**IS153**
84402	7.1	122.57	10.07	8992	4361	1169	**S153**	**IS153**
80913	6.3	139.21	8.5	8992	4361	1169	**S153**	**IS153**
63094	5.7	154.02	5.99	8992	4361	1169	**S153**	**IS153**
71552	5.5	160.02	6.54	8992	4361	1169	**S153**	**IS153**
72434	5.0	176.81	5.99	8992	4361	1169	**S153**	**IS153**
79497	4.5	194.06	5.99	8992	4361	1169	**S153**	**IS153**
82782	4.0	220.42	5.49	8992	4361	1169	**S153**	**IS153**
73272	3.5	253.36	4.23	8992	4361	1169	**S153**	**IS153**

6.1 SALES CONDITIONS

All supplies effected by Motovario are governed exclusively by the general terms of sale that you can find on our website:

http://www.motovario.com/eng/corporate/sales-conditions

NOTES

S / US / STD / REV.0 / 2017